PARTS MANUAL

H40A, H50A, H60A, H70A (R177)

Customer Edition

HYSTER

4277916
04/2026

©2026 HYSTER COMPANY

SECTIONS

1	FRAME
2	AIR INLET SYSTEM
3	ENGINE ASSEMBLY - YANMAR 2.1L DIESEL
4	ENGINE ASSEMBLY - YANMAR 2.2L LPG
5	ENGINE ASSEMBLY - DIESEL - NON CERT
6	THROTTLE SYSTEM
7	EXHAUST SYSTEM
8	COOLING SYSTEM
9	FUEL SYSTEM - LPG/BI FUEL
10	FUEL SYSTEM-DIESEL
11	ELECTRICAL SYSTEM
12	TRANSMISSION
13	DRIVE AXLE
14	STEERING SYSTEM
15	BRAKE SYSTEM
16	HYDRAULIC SYSTEM
17	MAST-TWO STAGE LIMITED FREE-LIFT

This Parts Manual is divided into 24 major sections which are listed above. Quick reference to these sections can be made by placing the right thumb on the tab of the desired section, bending the book back and thumbing the pages to the corresponding tab.

18 MAST-TWO STAGE FULL FREE-LIFT

19 MAST-FOUR STAGE FULL FREE-LIFT

20 MAST-THREE STAGE FULL FREE-LIFT

21 FORKS AND LOAD BACKREST

22 OPTIONS

23 FIELD CONVERSION KITS

24 NUMERICAL INDEX

This Parts Manual is divided into 24 major sections which are listed above. Quick reference to these sections can be made by placing the right thumb on the tab of the desired section, bending the book back and thumbing the pages to the corresponding tab.

TABLE OF CONTENTS

DESCRIPTION **PAGE**

Numbers/Symbols

12V BATTERY ARRANGEMENT
2.1L DIESEL (→ 4/2021) 11-6
2.1L DIESEL (4/2021 →) 11-8
2.2L LPG AND 3.0 AND 3.3L DIESEL (→ 4/2021) 11-12
2.2L LPG AND 3.0 AND 3.3L DIESEL (4/2021 →) 11-16

A

ACCESSORY BAR
FIXED 22-3
SWING OUT - FIGURE 8 OHG 22-4
SWING OUT - RECTANGULAR OHG 22-6
ACCESSORY BAR OPTION
FIXED BAR - MONITOR HOLDER (→ 3/2025) 22-8
FIXED BAR - MONITOR HOLDER (3/2025 →) 22-10
FIXED BAR - SCANNER HOLDER 22-11
FIXED BAR - TABLET HOLDER 22-13
FIXED BAR - CUP HOLDER 22-15
FIXED BAR - PHONE HOLDER 22-17
FIXED BAR - TAPE ROLL HOLDER 22-19
SWING OUT BAR - MONITOR AND SCANNER AND STRETCH WRAP 22-21
ACCUMULATOR
HOIST 22-23
ADD-ON OPTION KITS
AIR CONDITIONER COMPRESSOR 1-88
AIR FILTER
ASSEMBLY - 2.1L (→ 3/2021) 2-4
ASSEMBLY - 2.1L (3/2021 →) 2-6
ASSEMBLY - 2.2L 2-10
ASSEMBLY - 3.0L AND 3.3L 2-14
AIR INLET
PRE-CLEANER AND DUCT 2-20
AIR INLET SYSTEM
2.2L 2-8
3.0L AND 3.3L 2-12
3.0L AND 3.3L - WITH AIR CONDITIONING 2-18
3.0L AND 3.3L DIESEL - WITH SILENCER 2-16
WITH SILENCER - 2.1L 2-2
ALTERNATOR 3-38
HIGH OUTPUT 3-40
HIGH OUTPUT 4-32
YANMAR 3.0L AND 3.3L DIESEL 5-32
AMBIENT LIGHT SENSOR 11-20
AUDIBLE ALARM 11-21
AUTOPARKING VALVE
MOUNTING - POWERSHIFT TRANSMISSION 15-2
MOUNTING - HYDROSTATIC TRANSMISSION 15-4
AUXILIARY EXTENSION TUBES
ISS CARRIAGE - TWO STAGE LIMITED FREE-LIFT 22-71

©2026 HYSTER COMPANY

TABLE OF CONTENTS (continued)

DESCRIPTION **PAGE**

ISS CARRIAGE - TWO AND THREE STAGE FULL FREE-LIFT 22-73
STANDARD CARRIAGE - TWO STAGE LIMITED FREE-LIFT (→ PENDING PER ECN 169336) 22-66
STANDARD CARRIAGE - TWO STAGE LIMITED FREE-LIFT (PENDING PER ECN 169336 →) 22-68
STANDARD CARRIAGE - TWO AND THREE STAGE FFL (→ PENDING PER ECN 169336) 22-69
STANDARD CARRIAGE - TWO AND THREE STAGE FFL (PENDING PER ECN 169336 →) 22-70

B

BATTERY CABLES
TYPE S CABLES - 2.1L DIESEL (→ 4/2021) 11-26
W/ POSITIVE AND OR NEGATIVE DISCONNECT - 2.1L DIESEL 11-22
BATTERY CABLES AND CONTACTOR
YANMAR 2.1 DIESEL 11-32
YANMAR 2.1 DIESEL - TYPE S 11-38
YANMAR 2.2 LPG/GAS 11-28
YANMAR 2.2 LPG/GAS - ALTERNATE ARRANGEMENT 11-30
YANMAR 3.0 AND 3.3 DIESEL IDI 11-36
YANMAR DIESEL IDI - TYPE S 11-46
YANMAR LPG/GAS - TYPE S 11-42
BATTERY DISCONNECT SWITCH
LOW VOLTAGE AND TYPE S 11-50
BELLY SCREEN 22-24
BLOCK HEATER
120V - YANMAR 2.2L 22-25
120V - YANMAR 3.0L AND 3.3L 22-26
BRAKE ACTUATOR ARRANGEMENT
DRY BRAKE 15-5
WET BRAKE - BOOSTED 15-8
BRAKE ASSEMBLY
DRY BRAKE 15-12
BRAKE MASTER CYLINDER ASSEMBLY
DRY BRAKE 15-15
BRAKE PEDAL
DUAL 15-18
SINGLE 15-16

C

CAB HARNESS
2.1L DIESEL 11-52
2.2L LPG AND 3.0L AND 3.3L DIESEL 11-54
CAB HEATER
WITH 2.1L ENGINE HOSES (→ 1/2022) 1-76
WITH 2.1L ENGINE HOSES (1/2022 →) 1-77
WITH 2.2L ENGINE HOSES (→ 6/2022) 1-78
WITH 2.2L ENGINE HOSES (6/2022 →) 1-80
WITH 3.0 AND 3.3L ENGINE HOSES 1-82
CAB HEATER ASSEMBLY
→ 4/2023 1-70
4/2023 → 1-72

©2026 HYSTER COMPANY

TABLE OF CONTENTS (continued)

DESCRIPTION	PAGE
CAB HVAC ASSEMBLY	
4/2023 →	1-73
CAB HVAC SYSTEM	
2.1L (→ 8/2022)	1-56
2.1L (8/2022 →)	1-60
2.2L (→ 8/2022)	1-64
2.2L (8/2022 →)	1-66
3.0L AND 3.3L	1-68
CABIN DOORS	
PVC DOORS (→ 7/2024)	1-48
PVC DOORS (7/2024 →)	1-49
STEEL DOORS	1-41
STEEL DOORS - LH ASSEMBLY	1-44
STEEL DOORS - RH ASSEMBLY	1-46
CABLE	
POSITIVE BATTERY CABLE - 2.1L (→ 4/2021)	11-56
CAMSHAFT AND DRIVE GEAR	
YANMAR 3.0L AND 3.3L DIESEL	5-18
CAMSHAFT AND IDLE GEAR	3-22
CARRIAGE	
INTEGRAL SIDE-SHIFT - TWO STAGE LIMITED FREE-LIFT (H40A-H50A)	17-28
INTEGRAL SIDE-SHIFT - TWO STAGE LIMITED FREE-LIFT (H60A-H70A)	17-30
INTEGRAL SIDE-SHIFT - TWO STAGE FULL FREE-LIFT	18-44
INTEGRAL SIDE-SHIFT - FOUR STAGE FULL FREE-LIFT	19-24
INTEGRAL SIDE-SHIFT - THREE STAGE FULL FREE-LIFT	20-38
INTEGRAL SIDE-SHIFT AND STANDARD - MANUFACTURING OPTION	17-32
STANDARD - TWO STAGE LIMITED FREE-LIFT	17-25
STANDARD - TWO STAGE FULL FREE-LIFT	18-48
STANDARD - FOUR STAGE FULL FREE-LIFT	19-22
STANDARD - THREE STAGE FULL FREE-LIFT	20-42
CARRIAGE ASSEMBLY	
INTEGRAL SIDE-SHIFT - MANUFACTURING OPTION	17-34
CATALYTIC CONVERTER	7-6
CLUTCH PACK	
FORWARD AND REVERSE - POWERSHIFT	12-8
COMPARTMENT CUSHION SEALS	
FORWARD OPERATOR COMPARTMENT	1-96
CONDENSER ASSEMBLY	1-90
CONTROL PANEL ARRANGEMENT	11-58
ALTERNATE CONFIGURATION	11-60
E-HYDRAULIC (→ 7/2022)	11-62
E-HYDRAULIC - WITH RIDE THRU	11-64
CONTROL VALVE	
POWERSHIFT (WET OR DRY BRAKE) - BASIC	12-6
POWERSHIFT (WET OR DRY BRAKE) - DURAMATCH	12-7
CONVENIENCE TRAY	22-27
TYPE S	22-28

TABLE OF CONTENTS (continued)

DESCRIPTION	PAGE
CONVERSION KIT	
CONVERSION KITS	
COOLING SYSTEM	8-4
COOLING WATER SYSTEM	3-30
2.1L WITH CAC AND WTH DOC	3-32
COUNTERWEIGHT	1-5
COVERS	
EXTERIOR	1-98
OPERATOR COMPARTMENT - WITHOUT HVAC	1-92
OPERATOR COMPARTMENT - WITH HVAC	1-94
CRANKSHAFT AND PISTON	3-24
YANMAR 3.0L AND 3.3L DIESEL	5-20
CYLINDER BLOCK	3-4
YANMAR 3.0L AND 3.3L DIESEL	5-6
CYLINDER HEAD	
YANMAR 3.0L AND 3.3L DIESEL	5-10
CYLINDER HEAD AND COVER	3-10
D	
DASH PANEL	1-84
DASH ROCKER SWITCH ARRANGEMENT	
WORK LIGHT - WITH USB AND 12V OUTLETS	11-66
DIESEL PARTICULATE FILTER	
2.1L	7-24
2.1L WITH DOC	3-44
DISPLAY	11-68
REAR MOUNTED	11-70
DRIVE AXLE	
CENTER SECTION - DRY BRAKE	13-6
DRIVE AXLE ASSEMBLY	
DRY BRAKE	13-2
WET BRAKE - CENTRAL HOUSING ASSEMBLY	13-10
WET BRAKE - LEFT AND RIGHT ARM ASSEMBLY	13-12
WET BRAKE - SHAFT ASSEMBLY	13-16
WET BRAKE - INPUT FLANGE	13-18
WET BRAKE - DIFFERENTIAL ASSEMBLY	13-19
DRIVE AXLE BRAKE PLUMBING	
DRY BRAKE (→ 10/2021)	13-8
DRY BRAKE (10/2021 →)	13-9
HYDROSTATIC TRANSMISSION (→ 3/2023)	15-24
HYDROSTATIC TRANSMISSION - PAGE 1 OF 2 (3/2023 ↔ 12/2025)	15-28
HYDROSTATIC TRANSMISSION - PAGE 1 OF 2 (12/2025 →)	15-30
HYDROSTATIC TRANSMISSION - PAGE 2 OF 2 (3/2023 ↔ 12/2025)	15-32
HYDROSTATIC TRANSMISSION - PAGE 2 OF 2 (12/2025 →)	15-34
WET BRAKE (→ 12/2020)	15-20
WET BRAKE (12/2020 →)	15-22
DRIVE SHAFT	12-10
DRIVE WHEEL AND TIRE	
MANUFACTURING OPTION	13-30

©2026 HYSTER COMPANY

TABLE OF CONTENTS (continued)

DESCRIPTION	PAGE
STANDARD - H40A-H50A	13-21
STANDARD - H55A-H70A	13-23
DRIVE WHEEL AND TIRE ASSEMBLY	
SOLID - DUAL	13-26
SOLID - WIDE	13-28
DUAL MIRRORS	
RECTANGLE OHG	22-29
DUAL WHEEL ADAPTER	13-20
E	
ELECTRICAL ARRANGEMENT	
FRAME	11-72
FRAME - ALTERNATE CONFIGURATION	11-74
MAST - WITH MAST LIGHTS	11-78
ELECTRICAL PARTS	3-42
ENGINE	
AND ANCILLARY ELECTRICAL - YANMAR 3.0L AND 3.3L DIESEL	5-4
ENGINE FUEL SYSTEM	3-34
ENGINE MOUNTING AND TORQUE CONVERTER	3-2
YANMAR 3.0L AND 3.3L DIESEL	5-2
E-THROTTLE ACTUATOR	10-12
EXHAUST MANIFOLD	3-18
2.1L WITH CAC AND WTH DOC	3-20
EXHAUST SYSTEM	
2.2L LPG/BI-FUEL - WITH CATALYTIC CONVERTER	7-14
2.2L LPG/BI-FUEL - WITHOUT CATALYTIC CONVERTER	7-16
2.2L LPG/BI-FUEL - WITH RESONATOR	7-18
3.0L AND 3.3L - LOW EXIT	7-20
3.0L AND 3.3L - OVERHEAD EXIT	7-22
LOW EXIT - 2.1L WITH DOC	7-2
LOW EXIT - 2.1L WITH DPF	7-4
OVERHEAD EXIT 2.1L WITH DOC	7-10
OVERHEAD EXIT 2.1L WITH DPF	7-12
EXHAUST WRAP	
2.1L	7-8
F	
FAN	
MOUNTED (→ 6/2022)	22-30
MOUNTED - NON CAB (6/2022 →)	22-31
MOUNTED - CAB (6/2022 →)	22-33
FAST FAN	
2.2L LPG/BI-FUEL	8-14
FENDERS	
WITH ANTI-STATIC STRAP	13-32
FIRE EXTINGUISHER	
COWL MOUNTED - WITH OAS (5/2022 →)	22-37
COWL MOUNTED - WITHOUT OAS (5/2022 →)	22-38
FIGURE 8 W/ CAB (→ 5/2022)	22-36

TABLE OF CONTENTS (continued)

DESCRIPTION	PAGE
MANUFACTURING OPTION	22-39
WITHOUT CAB (→ 5/2022)	22-35
FLYWHEEL AND HOUSING	4-8
FLYWHEEL AND OIL PAN	
YANMAR 3.0L AND 3.3L DIESEL	5-16
FLYWHEEL HOUSING AND OIL SUMP	3-8
FORK LASER	
3FFL AND 2LFL	22-40
FORK POSITIONER	
BOLZONI - LIMITED FREE-LIFT	22-76
BOLZONI - FULL FREE-LIFT	22-80
CASCADE - LIMITED FREE-LIFT	22-78
CASCADE - FULL FREE-LIFT	22-82
FORK POSITIONER ASSEMBLY	
BOLZONI	22-88
CASCADE	22-84
FORKS	
BOLZONI	21-2
CASCADE - OPTIONAL	21-4
FRAME ASSEMBLY	
DIESEL	1-4
LPG AND BI-FUEL	1-3
FREE LIFT TUBES	
THREE STAGE FULL FREE-LIFT - LOW	20-51
THREE STAGE FULL FREE-LIFT - HIGH	20-52
TWO STAGE FULL FREE-LIFT (→ 8/2025)	18-65
TWO STAGE FULL FREE-LIFT (8/2025 →)	18-66
FREE-LIFT CYLINDER	
FOUR STAGE FULL FREE-LIFT	19-20
THREE STAGE FULL FREE-LIFT - 2.0-2.5T (G508)	20-16
THREE STAGE FULL FREE-LIFT - 3.0-3.5T (G563)	20-34
THREE STAGE FULL FREE-LIFT - 2.0-2.5T (A2M3)	20-71
THREE STAGE FULL FREE-LIFT - 3.0-3.5T (A2M4)	20-85
TWO STAGE FULL FREE-LIFT - F509\F564	18-39
FRONT SCREEN	
HEATED AND NON HEATED	1-29
NON HEATED - ASSEMBLY	1-31
FUEL FILTER AND WATER SEPARATOR	
YANMAR 3.0L AND 3.3L DIESEL	5-28
FUEL INJECTION SYSTEM	
YANMAR 3.0L AND 3.3L DIESEL	5-26
FUEL RAIL AND INJECTOR ASSEMBLY	
BI FUEL	4-26
LPG	4-24
FUEL SENDER ASSEMBLY	
2.1L	10-6
3.0L AND 3.3L	10-10
FUEL SYSTEM	
2.1L (→ 9/2021)	10-2

©2026 HYSTER COMPANY

TABLE OF CONTENTS (continued)

DESCRIPTION	PAGE
2.1L (9/2021 →)	10-4
3.0L AND 3.3L	10-8
BI-FUEL	9-2
LPG - WITH FUEL QUALITY SENSOR	9-4
FUSE BOX	
MOUNTING	11-80
G	
GEAR HOUSING	3-6
YANMAR 3.0L AND 3.3L DIESEL	5-8
H	
HARNESS RETENTION	
ENGINE - 2.1L DIESEL	11-82
ENGINE - 2.2L LPG	11-84
ENGINE - 2.2L LPG/BI-FUEL (ALTERNATE CONFIGURATION)	11-86
ENGINE - 3.0L AND 3.3L DIESEL	11-88
HYDROSTATIC TRANSMISSION	11-90
OHG, TRANSMISSION AND AUDIBLE ALARM (→ 4/2021)	11-92
OHG, TRANSMISSION AND AUDIBLE ALARM (4/2021 →)	11-94
SINGLE SPEED TRANSMISSION	11-96
STEER COLUMN - WITH ANCILLARY PARTS	11-98
HEADER HOSE	
FOUR STAGE FULL FREE-LIFT (→ 6/2023)	19-28
FOUR STAGE FULL FREE-LIFT (6/2023 →)	19-30
HEADER HOSE AND ATTACHING PARTS	
THREE STAGE FULL FREE-LIFT	20-44
THREE STAGE FULL FREE-LIFT - H50A WITH 28X9 TIRES	20-48
THREE STAGE FULL FREE-LIFT - A2M4	20-88
TWO STAGE FULL FREE-LIFT (→ 8/2025)	18-50
TWO STAGE FULL FREE-LIFT - H50A WITH 28X9 TIRES (→ 8/2025)	18-54
TWO STAGE FULL FREE-LIFT (8/2025 →)	18-58
TWO STAGE FULL FREE-LIFT - H50A WITH 28X9 TIRES (8/2025 →)	18-62
TWO STAGE LIMITED FREE-LIFT	17-36
TWO STAGE LIMITED FREE-LIFT	17-54
HEADLINER	
CAB	1-52
NO CAB	1-54
NO CAB - ALTERNATE CONFIGURATION	1-55
HEADLINER ROCKER SWITCH ARRANGEMENT	
WITH DOME LIGHT	11-100
HOOD AND ATTACHING PARTS	1-86
HORN	11-102
HYDRAULIC CONTROL VALVE ASSEMBLY	
FAN DRIVE SECTION WITH VDP, WITH HFD - MANUAL HYDRAULICS	16-60
FAN DRIVE SECTION WITH VDP, WITH HFD - ELECTRONIC HYDRAULICS	16-67
INLET SECTION - MANUAL HYDRAULICS	16-46
INLET SECTION - ELECTRONIC HYDRAULICS	16-47
INLET SECTION WITH VDP, WITH HFD - MANUAL HYDRAULICS	16-59

©2026 HYSTER COMPANY

TABLE OF CONTENTS (continued)

DESCRIPTION	PAGE
LIFT AND LOWER SECTION - MANUAL HYDRAULICS	16-51
LIFT SECTION - ELECTRONIC HYDRAULICS	16-52
LIFT SECTION WITH VDP, WITH HFD - MANUAL HYDRAULICS	16-61
MANUAL AND ELECTRONIC HYDRAULICS - H40A-H50A (→ 10/2022)	16-34
MANUAL AND ELECTRONIC HYDRAULICS - H40A-H50A (11/2022 →)	16-38
MANUAL AND ELECTRONIC HYDRAULICS - H60A-H70A (→ 10/2022)	16-40
MANUAL AND ELECTRONIC HYDRAULICS - H60A-H70A (11/2022 →)	16-44
OUTLET SECTION - MANUAL AND ELECTRONIC HYDRAULICS	16-54
TILT AND AUXILIARY SECTION - MANUAL HYDRAULICS	16-48
TILT AND AUXILIARY SECTION - ELECTRONIC HYDRAULICS	16-49
TILT SECTION WITH VDP - MANUAL HYDRAULICS	16-50
WITH VDP, WITH HFD - MANUAL HYDRAULICS (→ 10/2022)	16-55
WITH VDP, WITH HFD - MANUAL HYDRAULICS (11/2022 →)	16-57
WITH VDP, WITH HFD - ELECTRONIC HYDRAULICS (→ 10/2022)	16-63
WITH VDP, WITH HFD - ELECTRONIC HYDRAULICS (11/2022 →)	16-65
HYDRAULIC FAN DRIVE	8-8
HOSE ARRANGEMENT - PST	16-120
HOSE ARRANGEMENT - HST	16-122
HYDRAULIC FILTER	
SERVICE PARTS (11/2021 →)	16-31
HYDRAULIC FILTER ASSEMBLY	
→ 11/2021	16-30
HYDRAULIC HOSES	
HOIST AND AUXILIARY - 3FFL AND 2LFL	16-68
HOIST AND AUXILIARY - 2FFL	16-70
HYDRAULIC LEVERS	
WITH RTST WITHOUT DSS, WITH RTST AND DSS, WITH DSS WITHOUT RTST - 2 FUNCTION	16-108
WITH RTST WITHOUT DSS, WITH RTST AND DSS, WITH DSS WITHOUT RTST - 3 FUNCTION	16-110
WITH RTST WITHOUT DSS, WITH RTST AND DSS, WITH DSS WITHOUT RTST - 3 FUNCTION WITH DETENT	16-112
WITH RTST WITHOUT DSS, WITH RTST AND DSS, WITH DSS WITHOUT RTST - 4 FUNCTION	16-115
WITH RTST WITHOUT DSS, WITH RTST AND DSS, WITH DSS WITHOUT RTST - 4 FUNCTION WITH DETENT	16-117
WITHOUT RTST OR DSS - 3 FUNCTION WITHOUT DETENT	16-100
WITHOUT RTST OR DSS - 4 FUNCTION WITHOUT DETENT	16-102
WITHOUT RTST OR DSS - 3 FUNCTION WITH DETENT	16-104
WITHOUT RTST OR DSS - 4 FUNCTION WITH DETENT	16-106
HYDRAULIC OIL COOLER	16-4
HYDRAULIC OIL COOLER PLUMBING	
WITH GEAR PUMP	16-6
WITH VDP	16-8
HYDRAULIC PISTON PUMP	
HYDROSTATIC TRANSMISSION	16-126
POWERSHIFT TRANSMISSION	16-124
HYDRAULIC SUPPLY AND RETURN	
DIESEL - GEAR PUMP	16-10
DIESEL - PISTON PUMP	16-18
HYDROSTATIC TRANSMISSION (→ 8/2024)	16-24
HYDROSTATIC TRANSMISSION (8/2024 →)	16-28

©2026 HYSTER COMPANY

TABLE OF CONTENTS (continued)

DESCRIPTION **PAGE**

LPG/BI-FUEL - GEAR PUMP 16-14
LPG/BI-FUEL - PISTON PUMP 16-21

I

IMPACT SENSOR 11-103
INTAKE AND EXHAUST MANIFOLD
YANMAR 3.0L AND 3.3L DIESEL 5-14
INTAKE MANIFOLD 3-14
2.1L WITH CAC AND WTH DOC 3-16

J

JOYSTICK ASSEMBLY 11-104

L

LABELS
1 OF 2 1-118
2 OF 2 1-120
MLM AND JOYSTICK 1-122
LEFT HAND MAIN LIFT CYLINDER
TWO STAGE FULL FREE-LIFT - F509 18-10
TWO STAGE FULL FREE-LIFT - F564 18-29
LEVER POSITION MONITORING
MANUAL HYDRAULICS - ACCESSORY 1 11-107
LIFT HEIGHT SENSOR
2 AND 3 STAGE FFL 11-110
2 STAGE LFL 11-108
AND HARNESS - FOUR STAGE FULL FREE-LIFT 11-111
DISCRETE 11-113
LIGHT
REAR WORK LIGHT AIR CONDITIONER MOUNTED - MANUFACTURING OPTION 11-123
STROBE LIGHT - MANUFACTURING OPTION 11-118
LIGHTS
RED LINE - WITH REAR WORK LIGHT 11-114
SPOT LIGHTS - WITHOUT WORK LIGHTS OR MARKER 11-119
SPOT LIGHTS AND STROBE 11-116
TAIL LIGHTS AND REFLECTORS - WITH LIGHT COVER 11-125
WORK LIGHTS - TWO FRONT / ONE REAR 11-121
WORK LIGHTS - FRONT MARKER 11-124
LOAD BACKREST EXTENSION 21-6
DROP CENTER 21-8
LPG BRACKET ASSEMBLY
DROP DOWN - STEEL STRAP 9-6
SWING OUT - FABRIC STRAP 9-10
SWING OUT - STEEL STRAP 9-14
SWING OUT DROP DOWN - TWIN STEEL STRAPS (MFG OPTION) 9-20
LPG TANK BRACKET
INTERLOCK SENSOR 22-42
INTERLOCK SENSOR - ALTERNATE CONFIGURATION 22-44
LPG TANK BRACKET ASSEMBLY
FIXED - STEEL STRAP 9-17

©2026 HYSTER COMPANY

TABLE OF CONTENTS (continued)

DESCRIPTION **PAGE**

LUBE OIL SYSTEM
YANMAR 3.0L AND 3.3L DIESEL 5-22

M

MAIN LIFT CYLINDER
THREE STAGE FULL FREE-LIFT - 2.0-2.5T (G508) 20-13
THREE STAGE FULL FREE-LIFT - 3.0-3.5T (G563) 20-31
THREE STAGE FULL FREE-LIFT - 2.0-2.5T (A2M3) 20-69
THREE STAGE FULL FREE-LIFT - 3.0-3.5T (A2M4) 20-83
MAIN LIFT CYLINDER ASSEMBLY
FOUR STAGE FULL FREE-LIFT - LEFT HAND 19-16
FOUR STAGE FULL FREE-LIFT - RIGHT HAND 19-18
TWO STAGE LIMITED FREE-LIFT - G507 17-10
TWO STAGE LIMITED FREE-LIFT - G562 17-22
TWO STAGE LIMITED FREE-LIFT - A2M1 17-45
TWO STAGE LIMITED FREE-LIFT - A2M2 17-51
MAST AND TILT CYLINDER INSTALLATION 16-127
MAST ASSEMBLY
FOUR STAGE FULL FREE-LIFT - PAGE 1 OF 3 19-2
FOUR STAGE FULL FREE-LIFT - PAGE 2 OF 3 19-6
FOUR STAGE FULL FREE-LIFT - PAGE 3 OF 3 (→ 9/2023) 19-8
FOUR STAGE FULL FREE-LIFT - PAGE 3 OF 3 (9/2023 →) 19-12
THREE STAGE FULL FREE-LIFT 2.0-2.5T (A2M3) - PAGE 1 OF 3 20-60
THREE STAGE FULL FREE-LIFT 2.0-2.5T (A2M3) - PAGE 2 OF 3 20-62
THREE STAGE FULL FREE-LIFT 2.0-2.5T (A2M3) - PAGE 3 OF 3 20-66
THREE STAGE FULL FREE-LIFT 2.0-2.5T (G508) - PAGE 1 OF 3 20-2
THREE STAGE FULL FREE-LIFT 2.0-2.5T (G508) - PAGE 2 OF 3 20-6
THREE STAGE FULL FREE-LIFT 2.0-2.5T (G508) - PAGE 3 OF 3 20-10
THREE STAGE FULL FREE-LIFT 3.0-3.5T (A2M4) - PAGE 1 OF 3 20-74
THREE STAGE FULL FREE-LIFT 3.0-3.5T (A2M4) - PAGE 2 OF 3 20-76
THREE STAGE FULL FREE-LIFT 3.0-3.5T (A2M4) - PAGE 3 OF 3 20-80
THREE STAGE FULL FREE-LIFT 3.0-3.5T (G563) - PAGE 1 OF 3 20-20
THREE STAGE FULL FREE-LIFT 3.0-3.5T (G563) - PAGE 2 OF 3 20-24
THREE STAGE FULL FREE-LIFT 3.0-3.5T (G563) - PAGE 3 OF 3 20-28
TWO STAGE FULL FREE-LIFT - F509 (PAGE 1 OF 2) 18-2
TWO STAGE FULL FREE-LIFT - F509 (PAGE 2 OF 2) 18-6
TWO STAGE FULL FREE-LIFT - F564 (PAGE 1 OF 2) 18-22
TWO STAGE FULL FREE-LIFT - F564 (PAGE 2 OF 2) 18-26
TWO STAGE LIMITED FREE-LIFT - G507 (→ 3/2023) 17-2
TWO STAGE LIMITED FREE-LIFT - G507 (3/2023 →) 17-6
TWO STAGE LIMITED FREE-LIFT - G562 (→ 3/2023) 17-14
TWO STAGE LIMITED FREE-LIFT - G562 (3/2023 →) 17-18
TWO STAGE LIMITED FREE-LIFT - A2M1 17-42
TWO STAGE LIMITED FREE-LIFT - A2M2 17-48
MAST ELECTRICAL
WIRE TAKE-UP 17-38
WIRE TAKE-UP (→ 6/2022) 20-54
WIRE TAKE-UP (6/2022 →) 20-56
WIRE TAKE-UP - A2M4 20-92

©2026 HYSTER COMPANY

TABLE OF CONTENTS (continued)

DESCRIPTION **PAGE**

MINI-LEVER CONTROLS
FOUR FUNCTION - WITHOUT RTST 11-128
FOUR FUNCTION - WITH RTST 11-132
FOUR FUNCTION WITH SHELF HEIGHT SELECTOR - WITHOUT RTST 11-138
FOUR FUNCTION WITH SHELF HEIGHT SELECTOR - WITH RTST 11-140
THREE FUNCTION - WITHOUT RTST 11-126
THREE FUNCTION - WITH RTST 11-130
THREE FUNCTION WITH SHELF HEIGHT SELECTOR - WITHOUT RTST 11-134
THREE FUNCTION WITH SHELF HEIGHT SELECTOR - WITH RTST 11-136
MLM ARMREST SLIDER ASSEMBLY
7/2020 → 1-116
PAGE 1 OF 2 (→ 7/2020) 1-112
PAGE 2 OF 2 (→ 7/2020) 1-114

N

NOISE ABATEMENT
DASH AND KICK PANEL LINERS 1-128
HOOD LINERS (→ 2/2022) 1-124
HOOD LINERS (2/2022 →) 1-126
OHG AND FLOORPLATES 1-131
OPERATOR COMPARTMENT FRAME 1-129

O

OBJECT DETECTION SYSTEM
PAGE 1 OF 5 - ARRANGEMENT 22-46
PAGE 2 OF 5 - CONTROLLER 22-48
PAGE 3 OF 5 - SIDE SENSORS 22-50
PAGE 4 OF 5 - PROXIMITY SENSOR 22-52
PAGE 5 OF 5 - REAR SENSOR (→ 3/2022) 22-54
PAGE 5 OF 5 - REAR SENSOR (3/2022 →) 22-56
OHG WITHOUT REAR LIGHT
RESISTOR AND ATTACHING PARTS 11-142
OIL PIPE 3-28
OIL PUMP AND ATTACHING PARTS 3-26
OIL SYSTEM 4-20
OVERHEAD GUARD
FIG8 SHAPED LEGS 1-8
FIG8 SHAPED LEGS (ISOLATED) - ALTERNATE CONFIGURATION 1-12
FIG8 SHAPED LEGS (NON-ISOLATED) - ALTERNATE CONFIGURATION 1-16
RECTANGLE SHAPED LEGS 1-20
RECTANGLE SHAPED LEGS - ALTERNATE CONFIGURATION 1-22
OVERHEAD GUARD ACCESSORY OPTIONS
MIRRORS AND REAR HANDLE - FIGURE 8 OHG 22-58

P

PANORAMIC MIRROR
RECTANGLE OHG 22-60
PARKING BRAKE LEVER
ASSEMBLY (2/2022 ↔ 9/2023) 15-39
ASSEMBLY (9/2023 →) 15-40

TABLE OF CONTENTS (continued)

DESCRIPTION **PAGE**

DRY BRAKE (→ 2/2022) 15-36
DRY BRAKE (2/2022 →) 15-38
PARKING BRAKE VALVE
ASSEMBLY - POWERSHIFT TRANSMISSION 15-42
ASSEMBLY - HYDROSTATIC TRANSMISSION 15-43
PILOT PRESSURE ACCUMULATOR
HYDRAULIC SYSTEM - WITH VDP, WITHOUT HFD 16-32
HYDRAULIC SYSTEM - WITH VDP, WITH HFD 16-33
POWER TO MAST
HARNESS AND ANCILLARY PARTS (→ 8/2025) 11-143
HARNESS AND ANCILLARY PARTS (8/2025 →) 11-144

Q

Q-CURRENT SWITCH
PARKING BRAKE - DRY BRAKE 15-45
QUICK DISCONNECT FITTINGS
AUXILIARY EXTENSION TUBES 22-74

R

RADIATOR
3-ROW WITH CAC 8-10
3-ROW WITH CAC - ALTERNATE 8-12
RADIATOR MOUNTING AND ANCILLARY PARTS 8-2
RADIATOR SHROUD
AND ASSOCIATED PARTS - WITHOUT CAC AND WITHOUT HYD FAN DRIVE (5/2025 →) 8-7
RAIN TOP 1-40
REAR CAMERA 22-61
REAR SCREEN
AND ATTACHING PARTS (11/2024 →) 1-36
REAR SCREEN ASSEMBLY
11/2024 → 1-38
AND ATTACHING PARTS (→ 1/2024) 1-32
AND ATTACHING PARTS (1/2024 ↔ 11/2024) 1-34
REPAIR KIT
REPAIR KITS 23-25
RIGHT HAND MAIN LIFT CYLINDERS
TWO STAGE FULL FREE-LIFT - F509 (→ PENDING PER ECN 16126609) 18-14
TWO STAGE FULL FREE-LIFT - F509 (PENDING PER ECN 16126609 →) 18-18
TWO STAGE FULL FREE-LIFT - F564 (→ PENDING PER ECN 16126609) 18-32
TWO STAGE FULL FREE-LIFT - F564 (PENDING PER ECN 16126609 →) 18-36

S

SEAT ASSEMBLY
AIR SUSPENSION - GRAMMER 1-106
FULL SUSPENSION - TIANCHENG 1-104
FULL SUSPENSION - GRAMMER 1-108
NON SUSPENSION 1-100
SEAT BELT OPTIONS 1-110
SEATS
FULL AND AIR SUSPENSION 1-102

©2026 HYSTER COMPANY

TABLE OF CONTENTS (continued)

DESCRIPTION	PAGE
SENSOR	
SYNCHRONOUS STEERING	14-22
SERVICE KITS	
SPECIAL SERVICE TOOLS	
STARTER	3-36
YANMAR 3.0L AND 3.3L DIESEL	5-30
STEER AXLE	
NON SYNCHRONOUS	14-2
SYNCHRONOUS	14-6
STEER COLUMN AND ATTACHING PARTS	
TILT AND TELESCOPE	14-14
TILT ONLY	14-10
STEER COLUMN ASSEMBLY	
TILT AND TELESCOPE	14-20
TILT ONLY	14-18
STEER CYLINDER ASSEMBLY	14-9
STEER HYDRAULICS	16-80
HST	16-84
STEER WHEEL AND TIRE ASSEMBLY	14-23
MANUFACTURING OPTION	14-26
STRING CUTTER	22-62
T	
TELEMETRY OPTIONS	11-148
ALTERNATE CONFIGURATION	11-150
THROTTLE PEDAL	
DUAL	6-4
MONOTROL	6-3
NON-CERT DIESEL (→ 1/2023)	6-8
NON-CERT DIESEL (2/2023 →)	6-10
SINGLE	6-2
TILT CYLINDER BOOTS	22-63
TILT CYLINDERS	16-72
TILT HYDRAULICS	
WITH RTST	16-76
WITHOUT RTST	16-74
WITHOUT RTST - HST	16-78
TILT SENSOR	11-152
TOP AND FRONT SUN SHADE	22-64
TOP SCREEN	1-39
TOW PIN	
COUNTERWEIGHT - WITH OPERATOR ASSISTANCE SYSTEM	1-6
TRANSMISSION ASSEMBLY	
HYDROSTATIC - PAGE 1 OF 2 (→ 11/2024)	12-12
HYDROSTATIC - PAGE 1 OF 2 (11/2024 →)	12-14
HYDROSTATIC - PAGE 2 OF 2	12-16
POWERSHIFT (WET OR DRY BRAKE) - PAGE 1 OF 2	12-2
POWERSHIFT (WET OR DRY BRAKE) - PAGE 2 OF 2	12-5

©2026 HYSTER COMPANY

TABLE OF CONTENTS (continued)

DESCRIPTION **PAGE**

TRANSMISSION COOLING
HYDROSTATIC TRANSMISSION (→ 10/2022) 16-96
HYDROSTATIC TRANSMISSION (10/2022 →) 16-98
POWERSHIFT - WITH AIR CONDITIONING 16-86
POWERSHIFT - WITH AIR CONDITIONING (ALTERNATE CONFIGURATION) 16-88
POWERSHIFT - WITHOUT AIR CONDITIONING (→ 6/2021) 16-90
POWERSHIFT - WITHOUT AIR CONDITIONING (6/2021 →) 16-92
TRUCK START
PUSHBUTTON WITH REMOTE KEY SWITCH 11-153
TURBOCHARGER
2.1L WITH DOC 3-46

W

WASHER BOTTLE KIT 1-28
WASHER FLUID PLUMBING 1-26
WATER PUMP
YANMAR 3.0L AND 3.3L DIESEL 5-24
WATER PUMP AND COOLING BELT 4-22
WIRE HARNESS
12V AUXILIARY SUPPLY 11-154
AUDIBLE ALARM 11-156
AUDIBLE ALARM JUMPER 11-157
AUTO HIBERNATION - PARKING BRAKE (12/2024 →) 11-350
AUX 2 - CONTACTOR KEYED POWER 11-158
CAB - LOWER 11-160
CAB - LOWER (ALTERNATE PART) 11-164
CAB - UPPER 11-168
CAB - UPPER (ALTERNATE PART) 11-172
CAB - WASHER PUMP JUMPER 11-176
CHASSIS (BASE OPTION) - POWERSHIFT TRANSMISSION 11-178
CHASSIS (BASE OPTION) - POWERSHIFT TRANSMISSION (ALTERNATE PART) 11-184
CHASSIS (BASE OPTION) - DIESEL IDI - SINGLE SPEED TRANSMISSION (→ 3/2024) 11-246
CHASSIS (DIESEL IDI - SINGLE SPEED TRANSMISSION) - PAGE 1 OF 3 (3/2024 →) 11-264
CHASSIS (DIESEL IDI - SINGLE SPEED TRANSMISSION) - PAGE 2 OF 3 (3/2024 →) 11-270
CHASSIS (DIESEL IDI - SINGLE SPEED TRANSMISSION) - PAGE 3 OF 3 (3/2024 →) 11-276
CHASSIS (FULL OPTION) - POWERSHIFT TRANSMISSION (PAGE 1 OF 2) (9/2021 ↔ 11/2023) 11-226
CHASSIS (FULL OPTION) - POWERSHIFT TRANSMISSION (PAGE 2 OF 2) (9/2021 ↔ 11/2023) 11-232
CHASSIS (FULL OPTION) - DIESEL IDI - SINGLE SPEED TRANSMISSION (PAGE 1 OF 2) (→ 3/2024) 11-252
CHASSIS (FULL OPTION) - DIESEL IDI - SINGLE SPEED TRANSMISSION (PAGE 2 OF 2) (→ 3/2024) 11-258
CHASSIS (FULL OPTION) - HYDROSTATIC TRANSMISSION (PAGE 1 OF 2) (→ 2/2024) 11-280
CHASSIS (FULL OPTION) - HYDROSTATIC TRANSMISSION (PAGE 1 OF 2) (2/2024 →) 11-286
CHASSIS (FULL OPTION) - HYDROSTATIC TRANSMISSION (PAGE 2 OF 2) (→ 2/2024) 11-292
CHASSIS (FULL OPTION) - HYDROSTATIC TRANSMISSION (PAGE 2 OF 2) (2/2024 →) 11-298
CHASSIS (MID AND FULL OPTION) - POWERSHIFT TRANSMISSION (PAGE 1 OF 2) (3/2021 ↔ 9/2021) 11-202
CHASSIS (MID AND FULL OPTION) - POWERSHIFT TRANSMISSION (PAGE 2 OF 2) (3/2021 ↔ 9/2021) 11-208

©2026 HYSTER COMPANY

TABLE OF CONTENTS (continued)

DESCRIPTION	PAGE
CHASSIS (MID AND FULL OPTION) - POWERSHIFT TRANSMISSION (11/2023 →)	11-238
CHASSIS (MID OPTION) - POWERSHIFT TRANSMISSION (PAGE 1 OF 2) (→ 3/2021)	11-190
CHASSIS (MID OPTION) - POWERSHIFT TRANSMISSION (PAGE 2 OF 2) (→ 3/2021)	11-196
CHASSIS (MID OPTION) - POWERSHIFT TRANSMISSION (PAGE 1 OF 2) (9/2021 ↔ 11/2023)	11-214
CHASSIS (MID OPTION) - POWERSHIFT TRANSMISSION (PAGE 2 OF 2) (9/2021 ↔ 11/2023)	11-220
COLUMN - BASE	11-302
COLUMN - BASE (ALTERNATE PART)	11-306
COLUMN - FULL LEVERS	11-310
COLUMN - FULL LEVERS (ALTERNATE PART)	11-314
DISPLAY	11-316
DUAL THROTTLE PEDAL	11-318
E-HYDRAULICS	11-320
ENGINE - IDI WITH E-THROTTLE	11-382
ENGINE - IDI WITH E-THROTTLE (ALTERNATE)	11-386
FRONT OHG	11-323
FUEL PUMP	11-324
HYDRAULIC FAN DRIVE	11-325
HYDRAULIC FAN DRIVE - ALTERNATE PART	11-328
HYDROSTATIC TRANSMISSION	11-330
JUMPER - SEAT COMPRESSOR	11-333
LIFT HEIGHT - BASIC	11-334
LOWER MAST WORK LIGHTS - 2 LIGHTS	11-335
LOWER MAST WORK LIGHTS - 4 LIGHTS	11-336
MAINTENANCE CHARGE	11-337
M-HYD SPS JUMPER (BASE	11-338
M-HYD SPS JUMPER (MID/FULL	11-340
PARKING BRAKE - WET BRAKE ACTUATION (→ 9/2024)	11-344
PARKING BRAKE - WET BRAKE ACTUATION (9/2024 ↔ 12/2024)	11-346
PEDESTRIAN AWARENESS LIGHT	11-342
POWER CABLE - HIGH OUTPUT ALTERNATOR (LPG)	11-391
POWER TO MAST	11-354
REAR CAMERA - WITH FRONT DISPLAY	11-358
REAR CAMERA - WITH REAR DISPLAY	11-360
REAR OHG	11-362
REAR OHG (BASE OPTION) - ALTERNATE PART	11-365
REAR OHG (FULL OPTION) - ALTERNATE PART (→ 7/2022)	11-368
REAR OHG (FULL OPTION) - ALTERNATE PART (7/2022 →)	11-370
REAR OHG (MID OPTION) - ALTERNATE PART	11-366
SEAT - AIR RIDE SUSPENSION	11-373
SEAT - MECHANICAL SUSPENSION	11-375
TILT PROPORTION VALVE JUMPER	11-390
UPPER MAST WORK LIGHT	11-377
WIRE TAKE-UP	11-379

©2026 HYSTER COMPANY

ABBREVIATIONS QUICK REFERENCE SHEET

Listed below are abbreviations used in parts manuals to denote the following expressions:

TERM	DEFINITION
Amp	Amperes
AR	As Required
BDI	Battery Discharge Indicators
BWI	Brush Wear Indicator
CE	Communicator End
CRE	Corrosive Environment
D/B	Date Break
dbA	Decibel "A" Scale
DE	Drive End
ECH	Empty Container Handler
ECH-3	Empty Container Handler - 3 High Stacking
ECH-4	Empty Container Handler - 4 High Stacking
ECH-5	Empty Container Handler - 5 High Stacking
ECH-6	Empty Container Handler - 6 High Stacking
ECH-7	Empty Container Handler - 7 High Stacking
ECM	Electronic Control Module
ECN	Engineering Change Notice
EEPROM	Electrically Erasable Programmable Read Only Memory
EPA	US Environmental Protection Agency
EPROM	Electrically Programmable Read Only Memory

TERM	DEFINITION
FRE	Freezer Environment
in.	inches
LPG	Liquefied Petroleum Gas
MAP	Manifold Absolute Pressure
mm	millimeters
MSTS	Microprocessor Spark Timing System
NPT	National Pipe Threads
O/S	Oversize
PTO	Power Take Off
RPM	Revolutions per Minute
S/N	Serial Number
TMM	Truck Management Module
UL Type D	Diesel-Powered Safety Rating
UL Type DS	Diesel-Powered Safety Rating
UL Type E	Battery-Powered Safety Rating
UL Type EE	Battery-Powered Safety Rating
UL Type ES	Battery-Powered Safety Rating
UL Type G	Gasoline-Powered Safety Rating
UL Type GS	Gasoline-Powered Safety Rating
UL Type LP	Gas-Powered Safety Rating
UL Type LPS	LP Gas-Powered Safety Rating
U/S	Undersize
UL	Underwriters Laboratory
V	Volts

©2026 HYSTER COMPANY

HOW TO USE THE ILLUSTRATED PARTS MANUAL

This parts manual describes and illustrates assemblies, subassemblies, and detail parts needed for service replacement.

The different constructions are indicated by keys and footnotes. The callouts correspond to descriptions found on the next page.

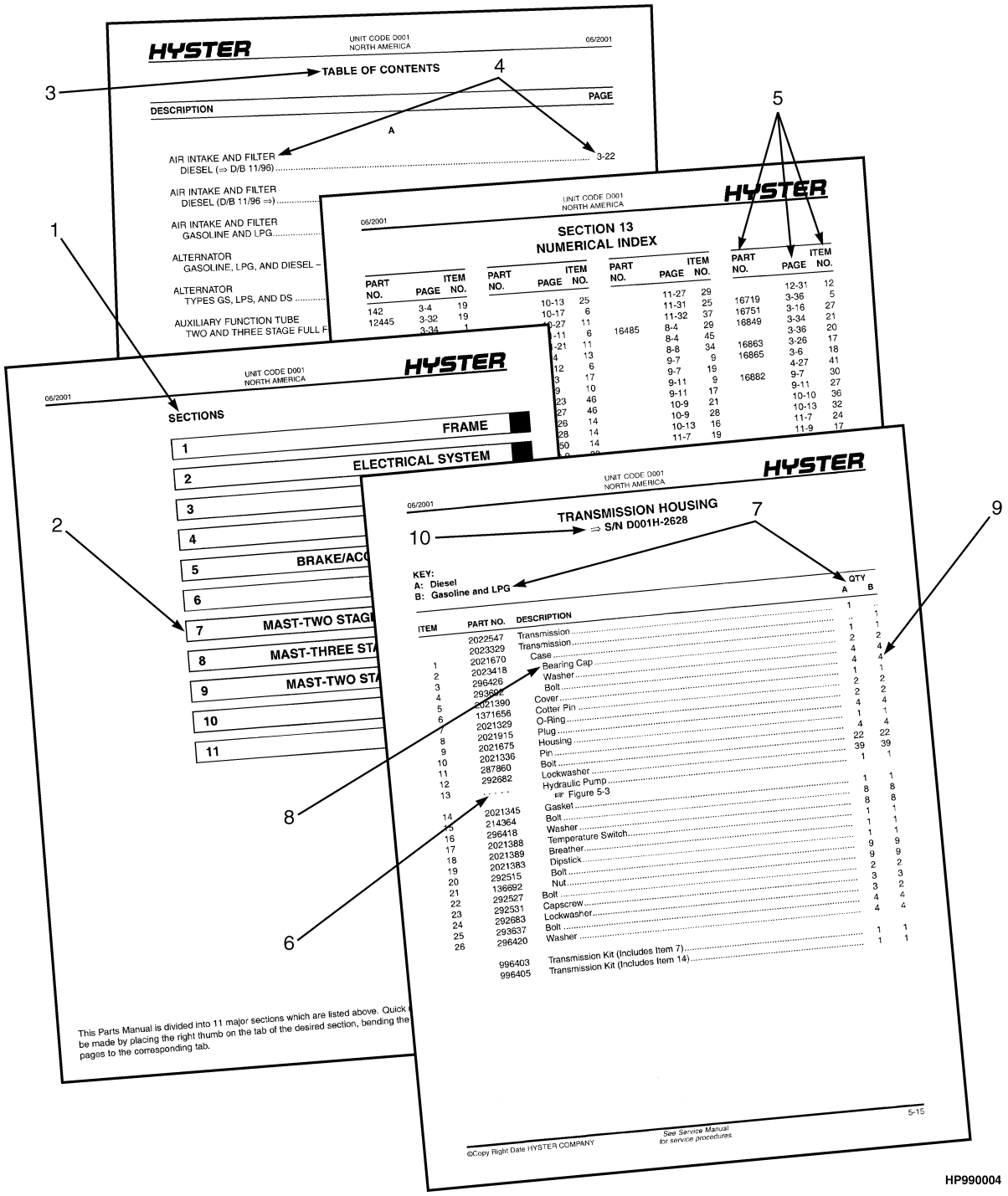

HOW TO FIND THE DESIRED PART NUMBER

WHEN THE PART NUMBER AND THE NEXT HIGHER ASSEMBLY IS NOT KNOWN:

1. Determine the function and application of the part required. Turn to the Sections Page. Choose the general area of reference most likely to include the part.
2. Turn to the section you chose. Use the Section Table of Contents to determine the assembly which would normally contain the part required. Then locate the part on the assembly breakdown page.

WHEN THE PART NUMBER IS NOT KNOWN AND THE NEXT HIGHER ASSEMBLY IS KNOWN:

3. Determine the assembly the required part is used on. Turn to the Table of Contents (Page i).
4. Locate the assembly the required part is used on and turn to the page indicated for that assembly. Then locate the part on the assembly breakdown page.

WHEN THE PART NUMBER IS KNOWN:

5. Use the Numerical Index (Page 24-1) to find the part number. Turn to the page listed and locate the part as indicated by the item number.

GENERAL:

The assembly breakdowns include part numbers, descriptions, quantities required, keys and footnotes to help in selecting correct parts.

6. Parts Supersession Information. Part numbers that have this history will be displayed in the parts list in the order that they were superseded (from oldest to newest). The superseded part numbers will be shown with a line through them.

   Five periods in the PART NO. column (. . . . .) indicate that the part is either *Not Serviced Separately* or there is a reference to another figure. A figure reference is denoted by a pointing hand followed by a figure number in the DESCRIPTION column (☞Figure 10)
7. Keys are used to show two or more similar assemblies, RH and LH assembly parts, etc. Select the appropriate key, "A", "B", "C", "D", or "E" and the corresponding quantity column to find the required parts. Two periods in the QTY column (..) indicate that the part is not used for that assembly.
8. Indented descriptions under the DESCRIPTION column are used to indicate assemblies and subparts of assemblies. In the example on the previous page, *BEARING CAP* (Item 2) is a subpart of the major assembly *CASE*.
9. Quantities shown are for one assembly. The quantities of the subpart *BEARING CAP* are indicated as two and two. This means two per *CASE* assembly.
10. Serial number breaks identify the most current parts information and are shown as follows:
    → **S/N D001H2628**
    Indicates last serial number affected.
    S/N D001H2629 →
    Indicates the first serial number affected.
    S/N D001H1553 ↔ S/N D001H3291
    Indicates a range of serial numbers affected.

    ECN numbers for pending serial numbers are shown to allow for the inclusion of the most current parts information and are identified as follows:
    → **S/N Pending Per ECN 63243**
    Indicates a pending serial number for last unit affected.
    S/N Pending Per ECN 63243 →
    Indicates a pending serial number for first unit affected.

    Date breaks are used to indicate when a change occurred but a subsequent serial number break was not recorded. This is an arbitrary date usually based on the ECN release and are identified as follows:
    → **D/B 3/00**
    Indicates that a change occurred sometime within that month for the item affected.
    D/B 3/00 →
    Indicates that a change occurred sometime within that month for the item affected.
    D/B 3/00 ↔ D/B 4/00
    Indicates a range of production dates of the item affected.

    Contact your local dealer for Hyster lift trucks for serial number information for items with a ECN or a date break.

ORDERING PARTS:

When ordering replacement parts, give the unit serial number, part number, name of part and quantity required.

For any further information on parts, service, or ordering, consult your local dealer for Hyster lift trucks.

©2026 HYSTER COMPANY

IDENTIFICATION OF TRUCK SERIAL NUMBERS

X	OOO	X	OOOO	X
(1)	(2)	(3)	(4)	(5)

(1) and (2) The first letter and three numbers indicate the truck unit code.

(3) The second letter indicates the plant of manufacture.

(4) The four or five digit number indicates the production sequence number of the truck.

(5) The final letter indicates the year of manufacture starting with "A" in 1957, 1980, and 2003. The letters "I", "O", and "Q" will not be used.

For pending serial numbers contact your local dealer for Hyster lift trucks.

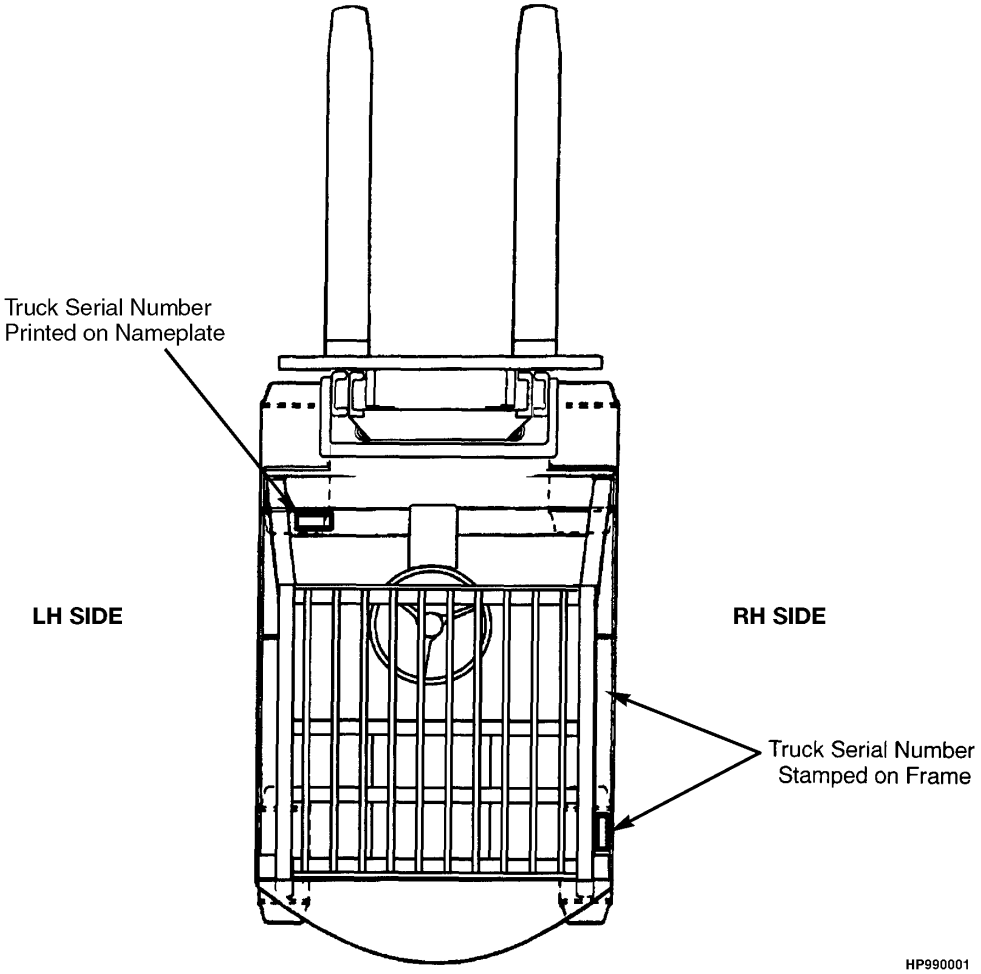

Parts referred to in this book as right or left hand parts are in accordance with the illustration above.

IDENTIFICATION OF MAST SERIAL NUMBERS

X	OOO	X	OOOO
(1)	(2)	(3)	(4)

OOOO
(5)

(1) and (2) The first letter and number indicates the mast unit code.

(3) The second letter indicates the plant of manufacture.

(4) The four or five digit number indicates the production sequence number of the mast.

(5) Carriage travel in millimeters stamped just below the serial number.

Mast Group identification consists of mast unit code (1) and (2) plus carriage travel (5).

For pending production sequence numbers contact your local dealer for Hyster lift trucks.

LIFT EQUIPMENT IDENTIFICATION

1. Fork part number, capacity rating, plant code letter, and date of manufacture are stamped approximately six inches below the top of most forks.
2. The carriage group number is stamped on the right hand side of the top crossmember (pin type) or on the back of the right hand end of the bottom crossmember (hook type). A date code has two letters in line with or below the carriage group number.
3. The mast identification number has a unit code, a letter indicating the plant of manufacture, and a serial number. Underneath the production sequence number is a four digit number that indicates the carriage travel in millimeters.
4. Tilt and lift cylinder group numbers are stamped on the cylinder shell.

   Always refer to the group, serial, or part number when ordering service parts.

   Modification of masts and carriages by SPED (Special Products Engineering Department) are identified by a model prefix code beginning with the letter "S". contact your dealer for Hyster lift trucks for information on these assemblies.

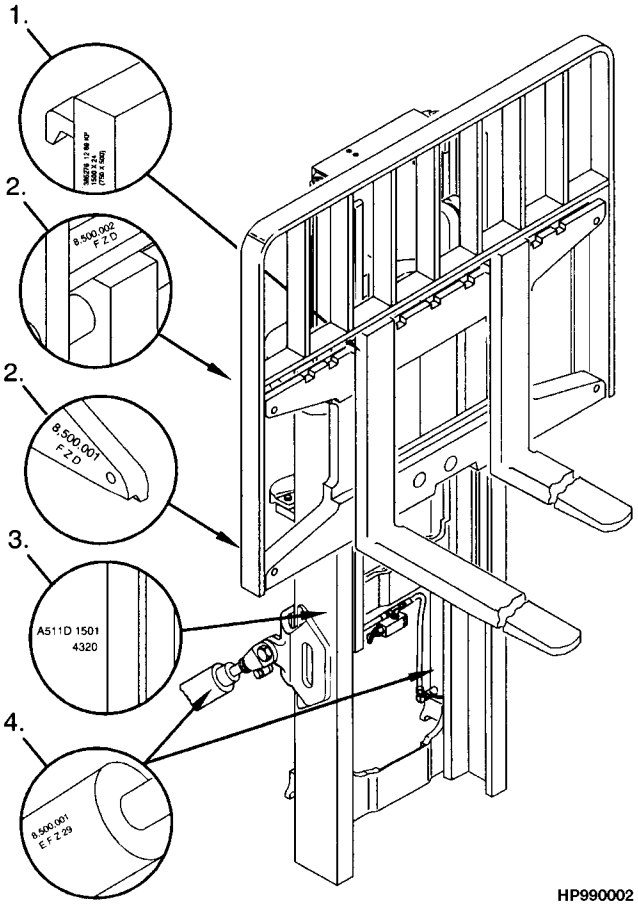

©2026 HYSTER COMPANY

PUBLICATIONS

Every new lift truck is provided with an OPERATING MANUAL. This manual has information that the operator must know for inspection and operation of the lift truck.

SERVICE MAINTENANCE MANUALS, which provide service and overhaul procedures, and PARTS MANUALS with complete replacement part identification, are available at a nominal fee from your Hyster dealer to assist users in effectively maintaining Hyster lift trucks in a safe, useful condition. See the list below for information on ordering specific publications for this model lift truck.

PUBLICATION	HYSTER PART NUMBER
Operating Manual	4278005
Service Manual (Complete)	4277924
Parts Manual	4277916

NOTES

©2026 HYSTER COMPANY

1 FRAME

SECTION 1
FRAME

DESCRIPTION **PAGE**

AIR CONDITIONER COMPRESSOR 1-88
CAB HEATER
WITH 2.1L ENGINE HOSES (→ 1/2022) 1-76
WITH 2.1L ENGINE HOSES (1/2022 →) 1-77
WITH 2.2L ENGINE HOSES (→ 6/2022) 1-78
WITH 2.2L ENGINE HOSES (6/2022 →) 1-80
WITH 3.0 AND 3.3L ENGINE HOSES 1-82
CAB HEATER ASSEMBLY
→ 4/2023 1-70
4/2023 → 1-72
CAB HVAC ASSEMBLY
4/2023 → 1-73
CAB HVAC SYSTEM
2.1L (→ 8/2022) 1-56
2.1L (8/2022 →) 1-60
2.2L (→ 8/2022) 1-64
2.2L (8/2022 →) 1-66
3.0L AND 3.3L 1-68
CABIN DOORS
PVC DOORS (→ 7/2024) 1-48
PVC DOORS (7/2024 →) 1-49
STEEL DOORS 1-41
STEEL DOORS - LH ASSEMBLY 1-44
STEEL DOORS - RH ASSEMBLY 1-46
COMPARTMENT CUSHION SEALS
FORWARD OPERATOR COMPARTMENT 1-96
CONDENSER ASSEMBLY 1-90
COUNTERWEIGHT 1-5
COVERS
EXTERIOR 1-98
OPERATOR COMPARTMENT - WITHOUT HVAC 1-92
OPERATOR COMPARTMENT - WITH HVAC 1-94
DASH PANEL 1-84
FRAME ASSEMBLY
DIESEL 1-4
LPG AND BI-FUEL 1-3
FRONT SCREEN
HEATED AND NON HEATED 1-29
NON HEATED - ASSEMBLY 1-31
HEADLINER
CAB 1-52
NO CAB 1-54
NO CAB - ALTERNATE CONFIGURATION 1-55
HOOD AND ATTACHING PARTS 1-86
LABELS
1 OF 2 1-118
2 OF 2 1-120
MLM AND JOYSTICK 1-122

©2026 HYSTER COMPANY

SECTION 1
FRAME

DESCRIPTION	PAGE
MLM ARMREST SLIDER ASSEMBLY	
7/2020 →	1-116
PAGE 1 OF 2 (→ 7/2020)	1-112
PAGE 2 OF 2 (→ 7/2020)	1-114
NOISE ABATEMENT	
DASH AND KICK PANEL LINERS	1-128
HOOD LINERS (→ 2/2022)	1-124
HOOD LINERS (2/2022 →)	1-126
OHG AND FLOORPLATES	1-131
OPERATOR COMPARTMENT FRAME	1-129
OVERHEAD GUARD	
FIG8 SHAPED LEGS	1-8
FIG8 SHAPED LEGS (ISOLATED) - ALTERNATE CONFIGURATION	1-12
FIG8 SHAPED LEGS (NON-ISOLATED) - ALTERNATE CONFIGURATION	1-16
RECTANGLE SHAPED LEGS	1-20
RECTANGLE SHAPED LEGS - ALTERNATE CONFIGURATION	1-22
RAIN TOP	1-40
REAR SCREEN	
AND ATTACHING PARTS (11/2024 →)	1-36
REAR SCREEN ASSEMBLY	
11/2024 →	1-38
AND ATTACHING PARTS (→ 1/2024)	1-32
AND ATTACHING PARTS (1/2024 ↔ 11/2024)	1-34
SEAT ASSEMBLY	
AIR SUSPENSION - GRAMMER	1-106
FULL SUSPENSION - TIANCHENG	1-104
FULL SUSPENSION - GRAMMER	1-108
NON SUSPENSION	1-100
SEAT BELT OPTIONS	1-110
SEATS	
FULL AND AIR SUSPENSION	1-102
TOP SCREEN	1-39
TOW PIN	
COUNTERWEIGHT - WITH OPERATOR ASSISTANCE SYSTEM	1-6
WASHER BOTTLE KIT	1-28
WASHER FLUID PLUMBING	1-26

©2026 HYSTER COMPANY

FRAME ASSEMBLY (FIGURE 1-1)
LPG AND BI-FUEL

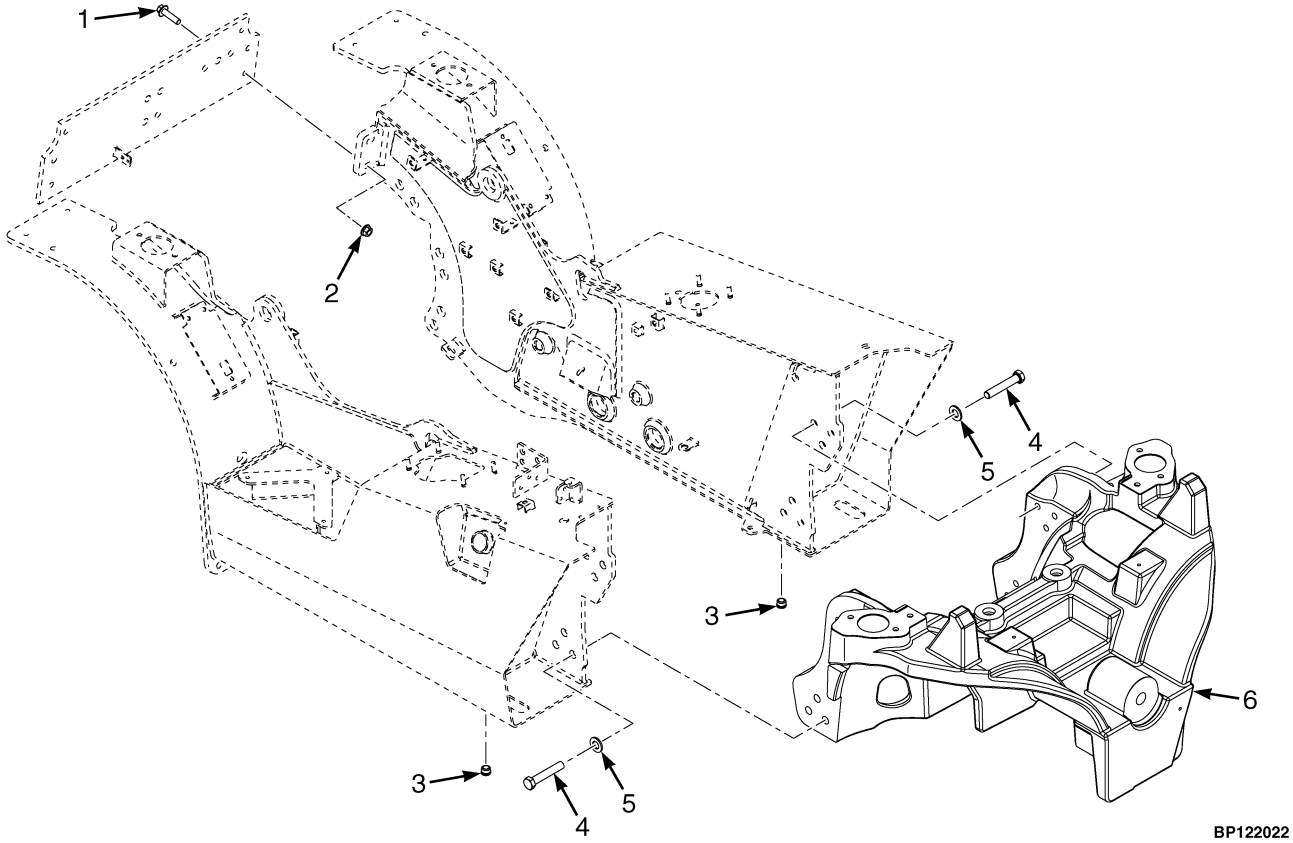

ITEM	PART NO.	DESCRIPTION	QTY
1	1510118	Capscrew	4
2	~~1370949~~		
	1528888	Nut (Shoulder)	4
3	**a** 1528481	Plug (With O-Ring for Drain)	2
4	4272648	Capscrew	12
5	296427	Washer	12
6	4306147	Frame - Rear (SWB)	1
6	4306148	Frame - Rear (LWB)	1

FOOTNOTES:

a LPG truck will not have drain on LH frame.

©2026 HYSTER COMPANY

FRAME ASSEMBLY (FIGURE 1-2)
DIESEL

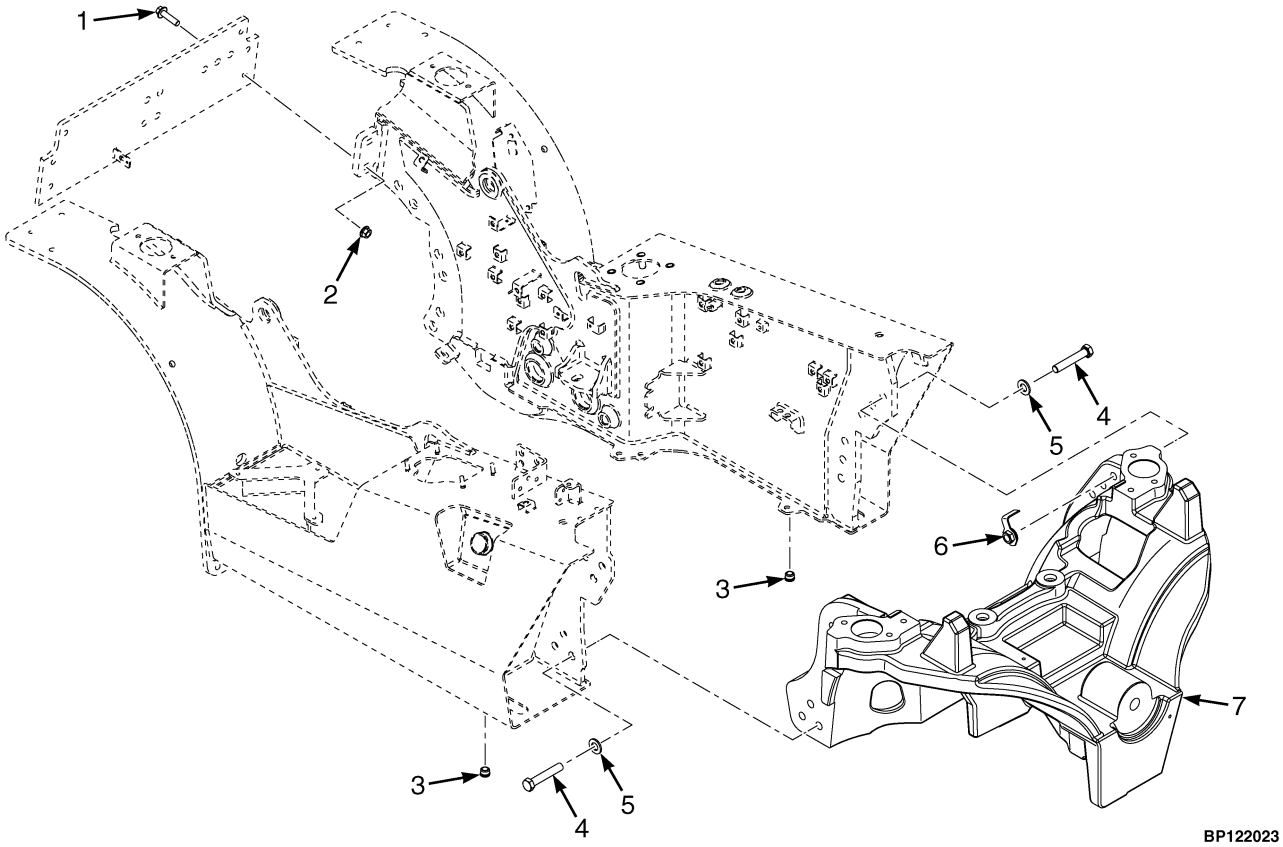

ITEM	PART NO.	DESCRIPTION	QTY
1	1510118	Capscrew	4
2	~~1370949~~		
	1528888	Nut (Shoulder)	4
3	1528481	Plug (With O-Ring for Drain)	2
4	4272647	Capscrew	12
4	4301948	Capscrew (Alternate Part)	12
5	296427	Washer	12
6	4255181	Nut	6
7	4306145	Frame - Rear (SWB)	1
7	4306146	Frame - Rear (LWB)	1

©2026 HYSTER COMPANY

COUNTERWEIGHT (FIGURE 1-3)

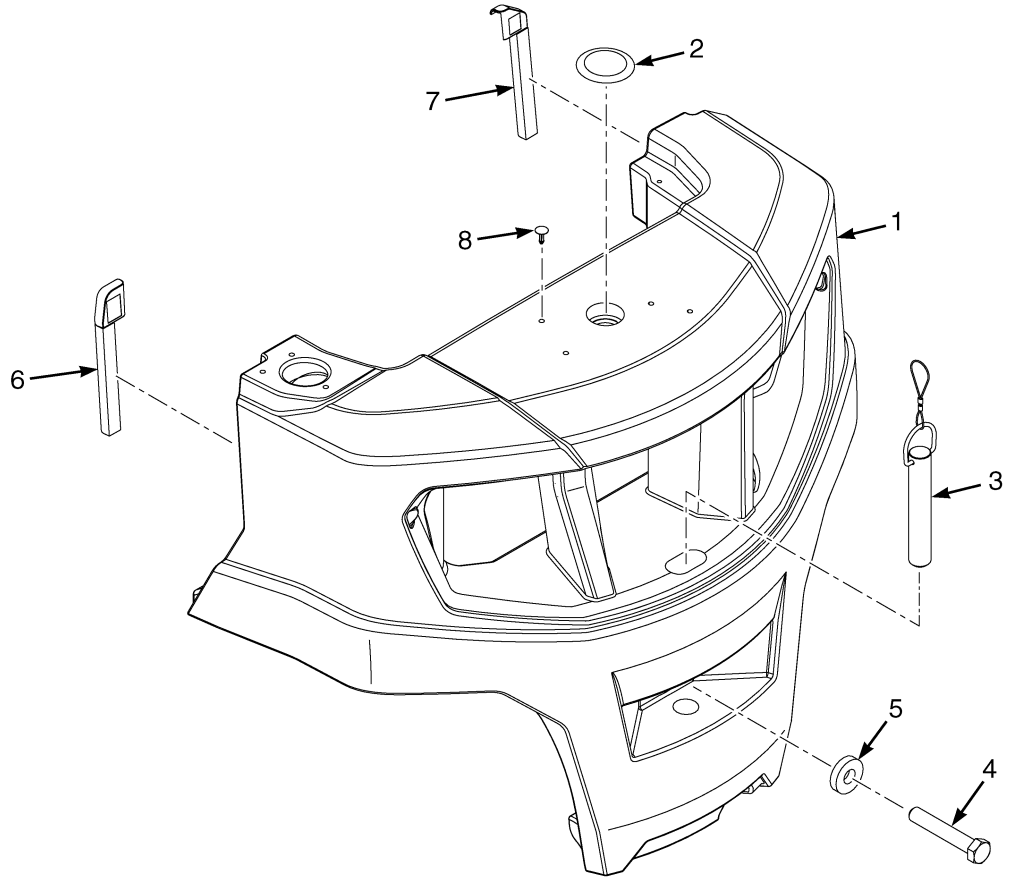

BP122024

ITEM	PART NO.	DESCRIPTION	QTY
1	4304705	Counterweight - 2.0T (H40A)	1
1	4304706	Counterweight - 2.5T (H50A)	1
1	4304707	Counterweight - 2.5(s)T (H55A)	1
1	4304708	Counterweight - 3.0T (H60A)	1
1	4304709	Counterweight - 3.5T (H70A)	1
2	4276991	Plug	1
3	4271246	Tow Pin	1
4	292613	Capscrew	1
5	1375214	Washer	1
6	4707444	Foam (LH)	1
7	4707445	Foam (RH)	1
8	1347045	Fastener	4

TOW PIN (FIGURE 1-4)

COUNTERWEIGHT — WITH OPERATOR ASSISTANCE SYSTEM

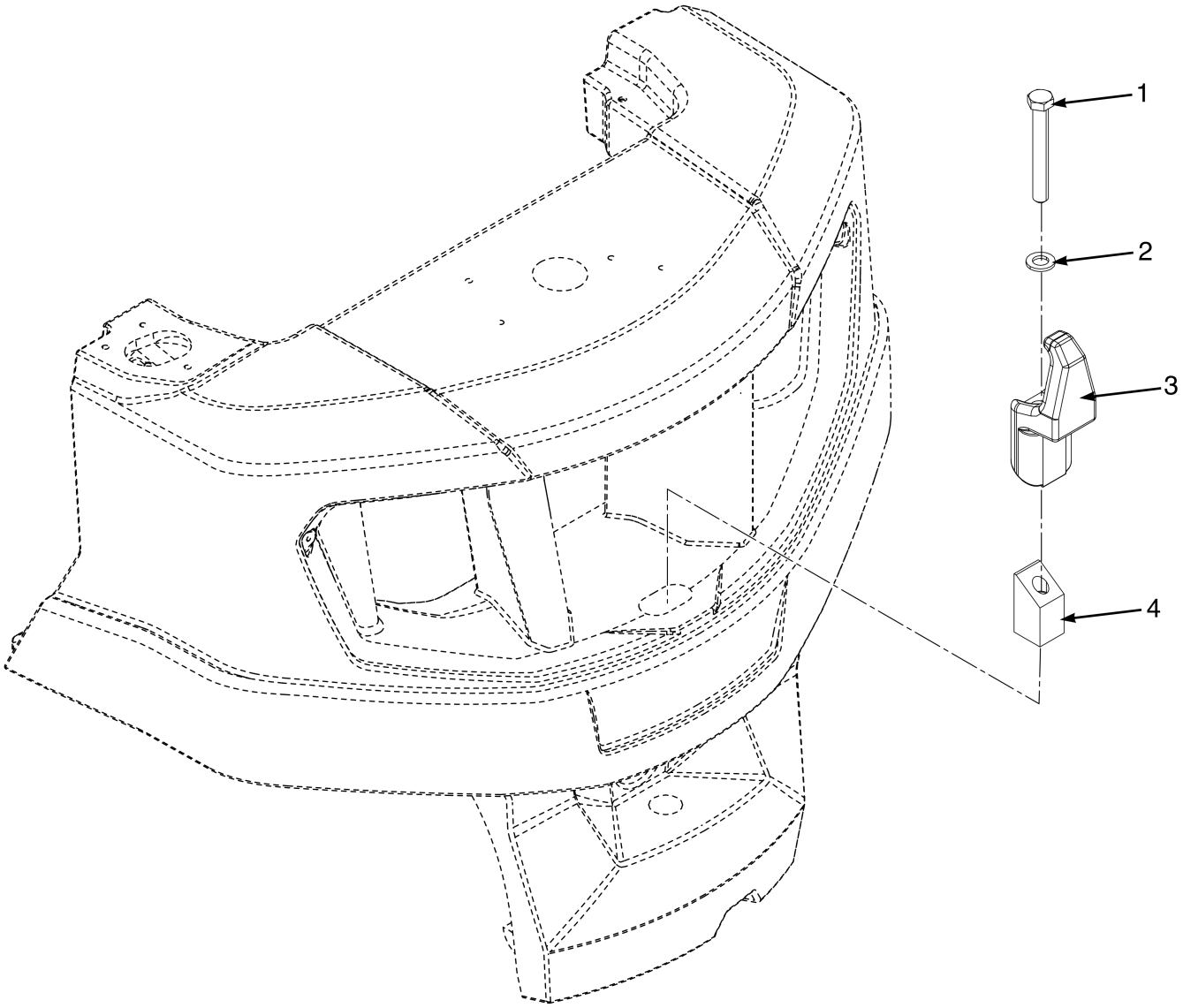

BP260199

ITEM	PART NO.	DESCRIPTION	QTY
	4329902	Tie Down (Assembly)	1
1	4246254	Capscrew	1
2	1626490	Washer	1
3	4320471	Tie Down (Counterweight Tow Pin with OAS)	1
4	4320472	Block (Counterweight Tow Pin with OAS)	1

©2026 HYSTER COMPANY

NOTES

OVERHEAD GUARD (FIGURE 1-5)
FIG8 SHAPED LEGS

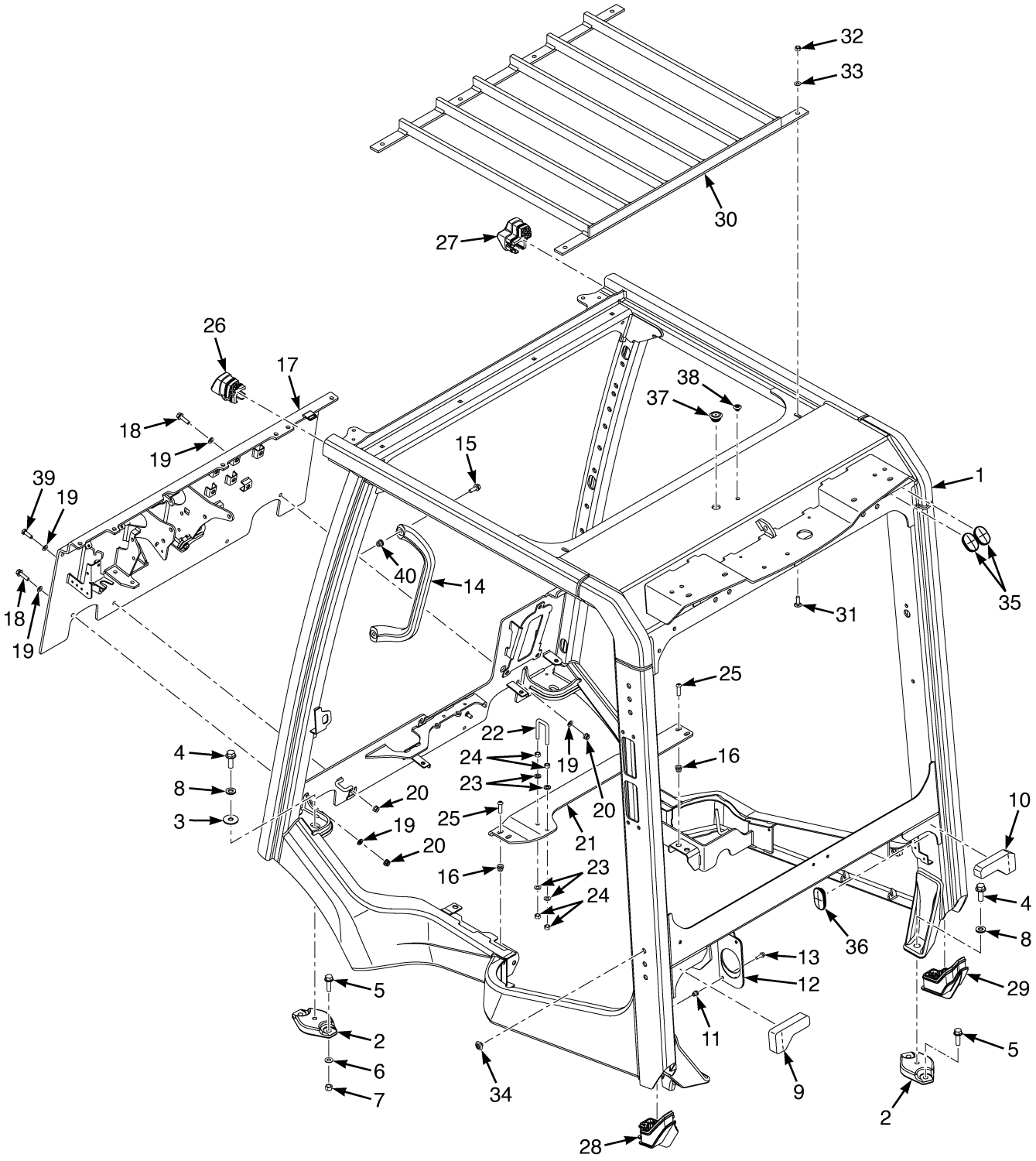

©2026 HYSTER COMPANY

OVERHEAD GUARD
FIG8 SHAPED LEGS

ITEM	PART NO.	DESCRIPTION	QTY
1	4307182	Operator Module (Fig8)	1
1	4329171	Operator Module (Fig8) (Alternate Part)	1
2	4241684	Spacer	4
3	1345190	Washer	2
4	4095058	Capscrew	4
5	1565195	Capscrew	8
6	320159	Washer	4
7	316826	Nut	4
8	4154502	Lockwasher	4
9	4693957	Foam - OHG, Rear, LH	1
10	4693958	Foam - OHG, Rear, RH	1
11	1531558	Insert	3
12	~~4284679~~		
	4347888	Plate	1
13	1527877	Capscrew	3
14	4706998	Handle Grip	1
15	4273869	Screw	2
16	1531557	Insert	4
17	4310050	Cowl	1
18	4309805	Capscrew	5
19	4309813	Lockwasher	10
20	4195768	Locknut	6
21	4268804	Crossmember	1
22	4262336	Striker - Hood Latch	1
22	4262335	Striker Bolt - Hood Latch	1
22	81005595	Striker - Hood Latch (Alternate Part)	1
22	81005594	Striker Bolt - Hood Latch	1
22	296418	Washer	4
22	292654	Nut	4
23	296418	Washer	4
24	2022719	Nut	4
25	4120966	Screw	4
26	4687571	Plug - OHG, LH	1
26	4698608	Plug - Fig8 OHG with Ambient Light Sensor Installed (Optional) (☞Figure 11-6)	1
27	4687572	Plug - OHG, RH	1
28	4687569	Plug - OHG, Rear, LH	1
29	4687568	Plug - OHG, Rear, RH	1
30	4262327	Plate Wldmt - Canopy	1
31	4163034	Bolt	6
32	313828	Nut	6
33	~~4217234~~		
	320157	Washer	6
34	1698801	Plug (Yellow) (0.53 in)	12
35	**b** 4698509	Grommet	2
35	**a** 4697773	Grommet	2
36	4697772	Grommet	2
37	1702412	Plug (0.90 Inch)	1
38	1698796	Plug (Black) (0.39 Inch)	1
39	4309804	Capscrew	1

OVERHEAD GUARD
FIG8 SHAPED LEGS

ITEM	PART NO.	DESCRIPTION	QTY
40	1531557	Insert	2
40	1530243	Insert (Alternate Part)	2

FOOTNOTES:

a w/ Cab Kit

b w/o Cab Kit

©2026 HYSTER COMPANY

NOTES

OVERHEAD GUARD (FIGURE 1-6)

FIG8 SHAPED LEGS (ISOLATED) — ALTERNATE CONFIGURATION

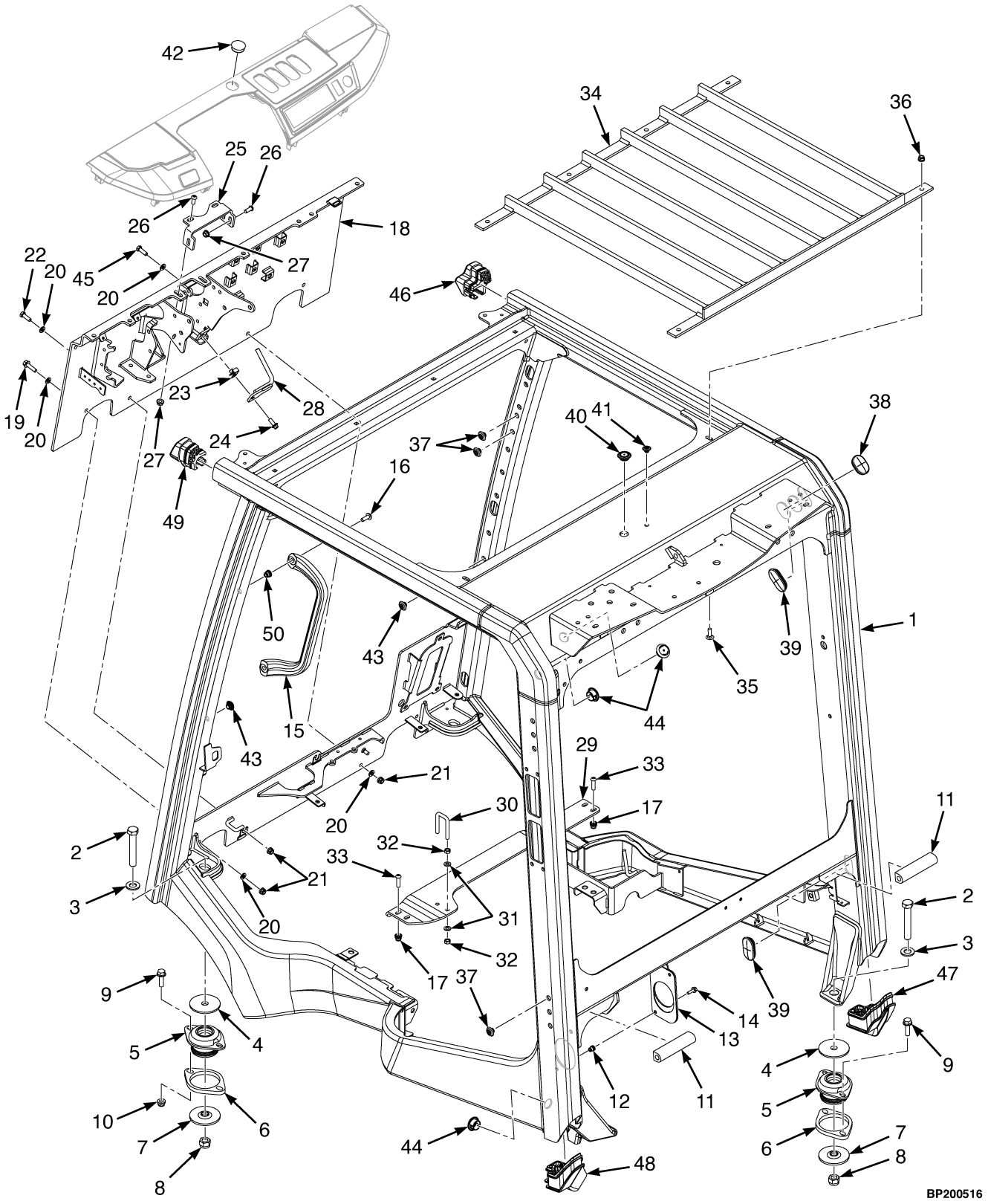

©2026 HYSTER COMPANY

OVERHEAD GUARD

FIG8 SHAPED LEGS (ISOLATED) – ALTERNATE CONFIGURATION

ITEM	PART NO.	DESCRIPTION	QTY
1	4329171	Operator Module	1
1	4280567	Operator Module (Alternate Part)	1
2	293695	Capscrew	4
3	296427	Washer	4
4	4307345	Washer (Upper)	4
5	4307344	Isolator	4
6	4307518	Spacer	4
7	4307346	Washer	4
8	4627358	Nut	4
9	1565195	Capscrew	8
10	4195769	Locknut	4
11	4307150	Seal	2
12	1531558	Insert	3
13	4284680	Plate (Assy)	1
14	1527877	Capscrew	3
15	4706998	Handle Grip	1
16	4273869	Screw	2
17	1531557	Insert	4
18	4326057	Cowl	1
19	4309805	Capscrew	5
19	4349483	Capscrew (Alternate Parts)	5
20	4309813	Lockwasher	12
21	4195768	Locknut	7
22	4309804	Capscrew	1
23	1398062	Nut (Fold Over)	1
24	1527880	Capscrew	1
25	4332448	Bracket - Steering Column Mount	1
26	1529990	Screw	5
27	~~1382472~~		
	1502543	Nut	5
28	4309912	Bracket Wldmt - Steer Hose Guide	1
29	4268804	Crossmember	1
30	4262336	Striker - Hood Latch	1
30	4262335	Striker Bolt - Hood Latch	1
30	81005595	Striker - Hood Latch (Alternate Part)	1
30	81005594	Striker Bolt - Hood Latch	1
30	296418	Washer	4
30	292654	Nut	4
31	296418	Washer	4
32	292654	Nut	4
33	4120966	Screw	4
34	4262327	Plate Wldmt - Canopy	1
35	4309811	Bolt	6
36	4309809	Locknut	6
37	1698801	Plug (Yellow) (0.53 in)	18
38	**b** 4698509	Grommet	2
38	**a** 4697773	Grommet	2
39	4697772	Grommet	2
40	**e** 1702412	Plug (0.90 Inch)	1
41	**e** 1698796	Plug (Black) (0.39 Inch)	1

©2026 HYSTER COMPANY

OVERHEAD GUARD

FIG8 SHAPED LEGS (ISOLATED) – ALTERNATE CONFIGURATION

ITEM	PART NO.	DESCRIPTION	QTY
42	**c** 1589280	Plug	1
43	**c** 1698801	Plug (Yellow) (0.53 in)	2
44	**d** 4319935	Plug	3
45	4309805	Capscrew (w/ Object Detect)	1
45	4309804	Capscrew (w/o Object Detect)	1
46	4687572	Plug - OHG, RH	1
47	4687568	Plug - OHG, Rear, RH	1
48	4687569	Plug - OHG, Rear, LH	1
49	4687571	Plug - OHG, LH	1
49	4698608	Plug - Fig8 OHG with Ambient Light Sensor Installed (Optional) (☞Figure 11-6)	1
50	1531557	Insert	2
50	1530243	Insert (Alternate Part)	2

FOOTNOTES:

a w/ Cab Kit
b w/o Cab Kit
c w/o Front Screen
d w/o Proximity Sensor
e w/o Top Wiper

©2026 HYSTER COMPANY

NOTES

OVERHEAD GUARD (FIGURE 1-7)

FIG8 SHAPED LEGS (NON-ISOLATED) — ALTERNATE CONFIGURATION

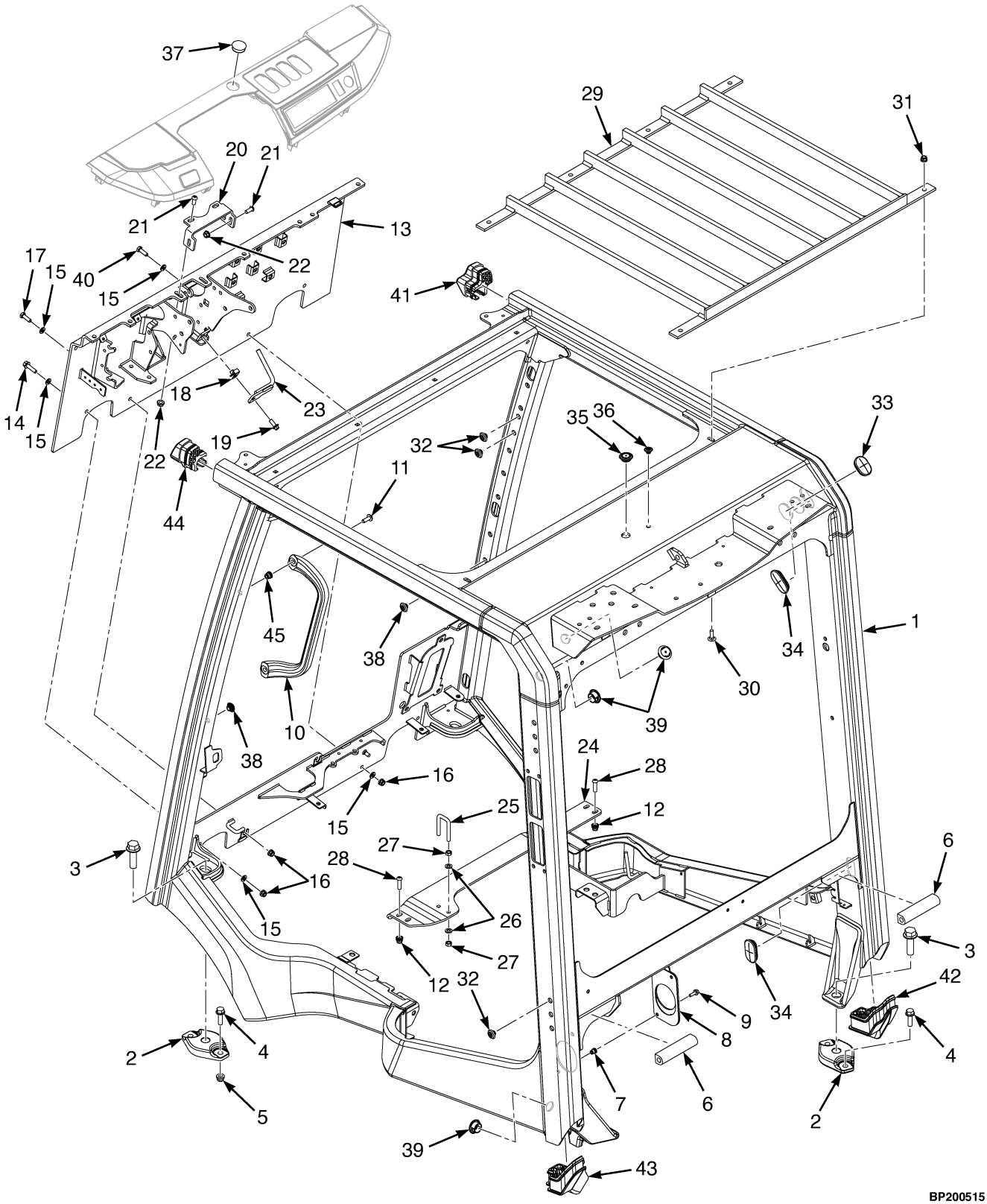

©2026 HYSTER COMPANY

OVERHEAD GUARD

FIG8 SHAPED LEGS (NON-ISOLATED) – ALTERNATE CONFIGURATION

ITEM	PART NO.	DESCRIPTION	QTY
1	4329171	Operator Module	1
1	4280567	Operator Module (Alternate Part)	1
2	4306705	Spacer	4
3	4206632	Capscrew	4
4	1565195	Capscrew	8
5	4195769	Locknut	4
5	~~4373640~~		
	4380722	Nut (Alternate Part)	4
6	4307150	Seal	2
7	1531558	Insert	3
8	~~4284679~~		
	4347888	Plate	1
9	1527877	Capscrew	3
10	4706998	Handle Grip	1
11	4273869	Screw	2
12	1531557	Insert	4
13	4326057	Cowl	1
14	4309805	Capscrew	5
14	4349483	Capscrew (Alternate Parts)	5
15	4309813	Lockwasher	12
16	4195768	Locknut	7
17	4309804	Capscrew	1
18	1398062	Nut (Fold Over)	1
19	1527880	Capscrew	1
20	4332448	Bracket - Steering Column Mount	1
21	1529990	Screw	5
22	~~1382472~~		
	1502543	Nut	5
23	4309912	Bracket Wldmt - Steer Hose Guide	1
24	4268804	Crossmember	1
25	4262336	Striker - Hood Latch	1
25	4262335	Striker Bolt - Hood Latch	1
25	81005595	Striker - Hood Latch (Alternate Part)	1
25	81005594	Striker Bolt - Hood Latch	1
25	296418	Washer	4
25	292654	Nut	4
26	296418	Washer	4
27	292654	Nut	4
28	4120966	Screw	4
29	4262327	Plate Wldmt - Canopy	1
30	4309811	Bolt	6
31	4309809	Locknut	6
32	1698801	Plug (Yellow) (0.53 in)	18
33	**b** 4698509	Grommet	2
33	**a** 4697773	Grommet	2
34	4697772	Grommet	2
35	**e** 1702412	Plug (0.90 Inch)	1
36	**e** 1698796	Plug (Black) (0.39 Inch)	1
37	**c** 1589280	Plug	1
38	**c** 1698801	Plug (Yellow) (0.53 in)	2

OVERHEAD GUARD

FIG8 SHAPED LEGS (NON-ISOLATED) – ALTERNATE CONFIGURATION

ITEM	PART NO.	DESCRIPTION	QTY
39	**d** 4319935	Plug	3
40	4309805	Capscrew (w/ Object Detect)	1
40	4309804	Capscrew (w/o Object Detect)	1
41	4687572	Plug - OHG, RH	1
42	4687568	Plug - OHG, Rear, RH	1
43	4687569	Plug - OHG, Rear, LH	1
44	4698608	Plug - Fig8 OHG with Ambient Light Sensor Installed (Optional) (☞Figure 11-6)	1
44	4687571	Plug - OHG, LH	1
45	1531557	Insert	2
45	1530243	Insert (Alternate Part)	2

FOOTNOTES:

a w/ Cab Kit
b w/o Cab Kit
c w/o Front Screen
d w/o Proximity Sensor
e w/o Top Wiper

©2026 HYSTER COMPANY

NOTES

OVERHEAD GUARD (FIGURE 1-8)
RECTANGLE SHAPED LEGS

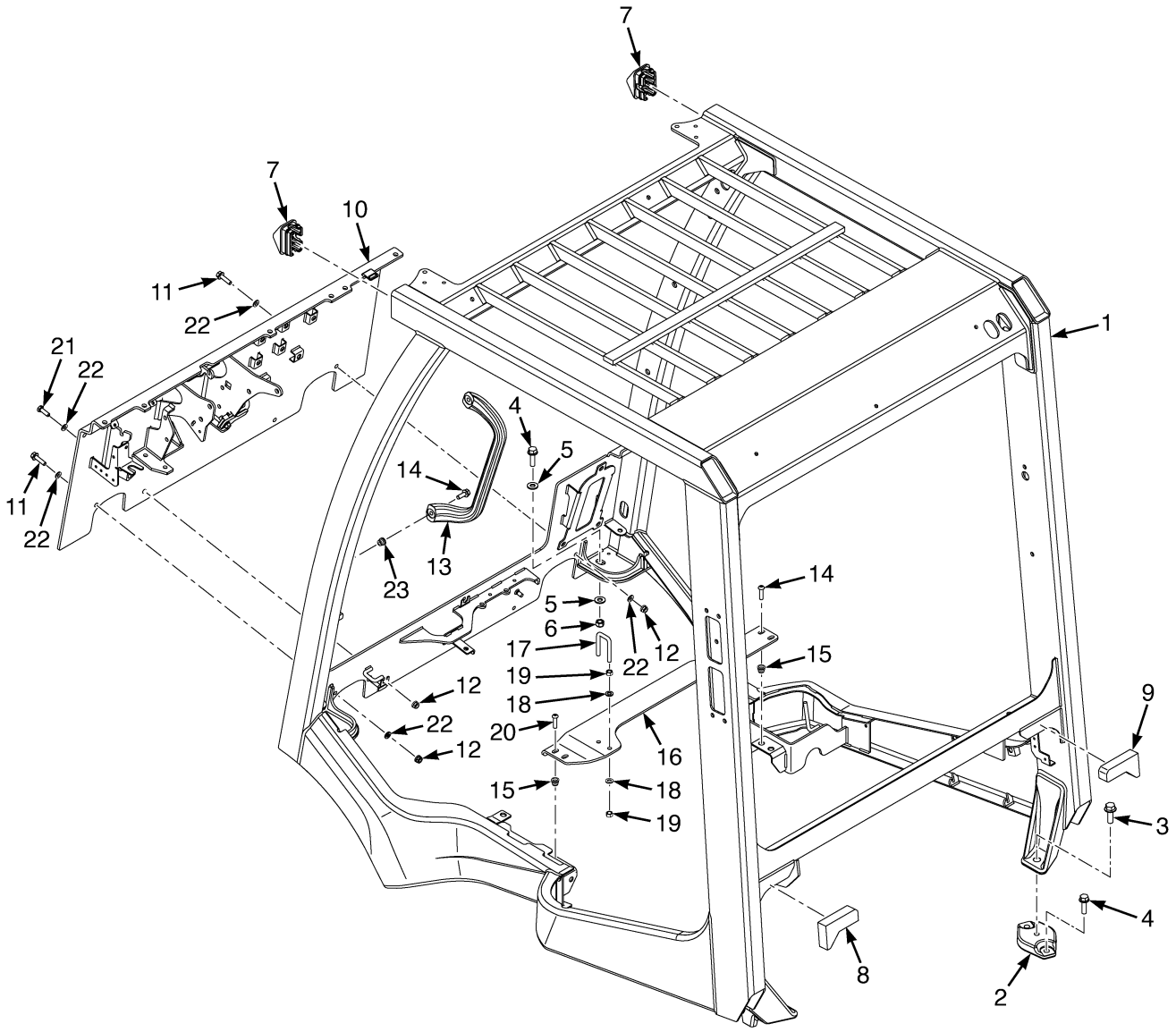

BP200452

©2026 HYSTER COMPANY

OVERHEAD GUARD
RECTANGLE SHAPED LEGS

ITEM	PART NO.	DESCRIPTION	QTY
1	4307183	Operator Module (OHG / High)	1
1	4377977	Operator Module (OHG / High) (Alternate Part)	1
1	4307184	Operator Module (OHG / Low)	1
1	4377978	Operator Module (OHG / Low) (Alternate Part)	1
1	4307185	Operator Module (OHG / Special Low)	1
1	4377979	Operator Module (OHG / Special Low) (Alternate Part)	1
2	4241684	Spacer	2
3	4206632	Capscrew	2
4	1565195	Capscrew	6
5	296421	Washer	4
6	316826	Nut	2
7	4687570	Plug - OHG, Rect	2
7	4698609	Plug - Rect OHG with Ambient Light Sensor Installed (☞Figure 11-6)	1
8	4693957	Foam - OHG, Rear, LH	1
9	4693958	Foam - OHG, Rear, RH	1
10	4310050	Cowl	1
11	4309805	Capscrew	5
11	4349483	Capscrew (Alternate Parts)	5
12	4195768	Locknut	6
13	4706998	Handle Grip	1
14	4273869	Screw	2
15	1531557	Insert	4
16	4268804	Crossmember	1
17	4262336	Striker - Hood Latch	1
17	4262335	Striker Bolt - Hood Latch	1
17	81005595	Striker - Hood Latch (Alternate Part)	1
17	81005594	Striker Bolt - Hood Latch	1
17	296418	Washer	4
17	292654	Nut	4
18	296418	Washer	4
19	2022719	Nut	4
20	4120966	Screw	4
21	4309804	Capscrew	1
22	4309813	Lockwasher	10
23	1531557	Insert	2
23	1530243	Insert (Alternate Part)	2

OVERHEAD GUARD (FIGURE 1-9)

RECTANGLE SHAPED LEGS — ALTERNATE CONFIGURATION

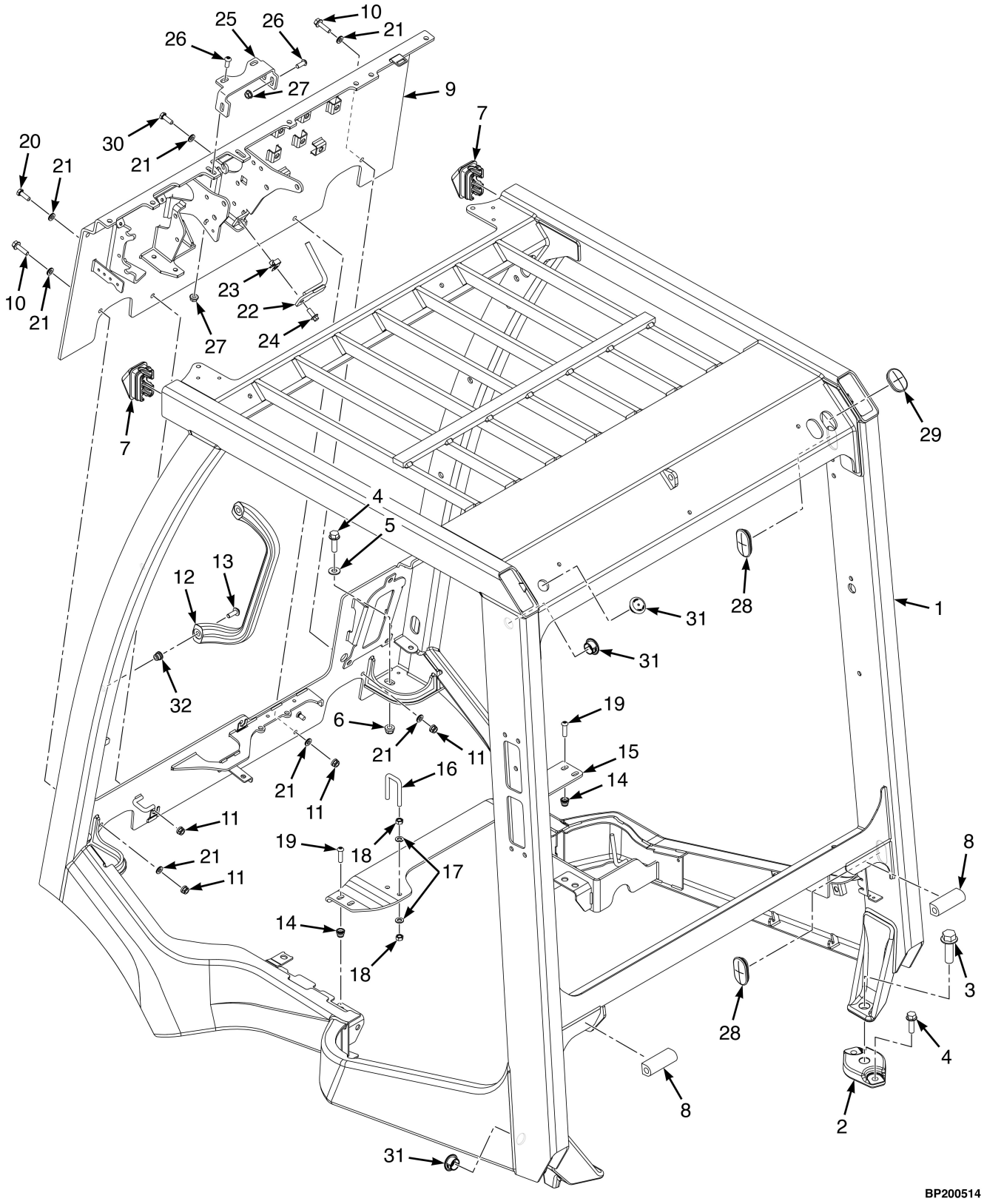

©2026 HYSTER COMPANY

OVERHEAD GUARD

RECTANGLE SHAPED LEGS – ALTERNATE CONFIGURATION

ITEM	PART NO.	DESCRIPTION	QTY
1	4307183	Operator Module (OHG / High)	1
1	4377977	Operator Module (OHG / High) (Alternate Part)	1
1	4307184	Operator Module (OHG / Low)	1
1	4377978	Operator Module (OHG / Low) (Alternate Part)	1
1	4307185	Operator Module (OHG / Special Low)	1
1	4377979	Operator Module (OHG / Special Low) (Alternate Part)	1
2	4306705	Spacer	2
3	4206632	Capscrew	2
4	1565195	Capscrew	6
5	296421	Washer	2
6	4195769	Locknut	4
6	~~4373640~~		
	4380722	Nut (Alternate Part)	4
7	4687570	Plug - OHG, Rect	2
7	4698609	Plug - Rect OHG with Ambient Light Sensor Installed (☞Figure 11-6)	1
8	4318786	Seal	2
9	4326057	Cowl	1
10	4309805	Capscrew	5
11	4195768	Locknut	7
12	4706998	Handle Grip	1
13	4273869	Screw	2
14	1531557	Insert	4
15	4268804	Crossmember	1
16	4262336	Striker - Hood Latch	1
16	4262335	Striker Bolt - Hood Latch	1
16	81005595	Striker - Hood Latch (Alternate Part)	1
16	81005594	Striker Bolt - Hood Latch	1
16	296418	Washer	4
16	292654	Nut	4
17	296418	Washer	4
18	292654	Nut	4
19	4120966	Screw	4
20	4309804	Capscrew	1
21	4309813	Lockwasher	12
22	4309912	Bracket Wldmt - Steer Hose Guide	1
23	1398062	Nut (Fold Over)	1
24	1527880	Capscrew	1
25	4332448	Bracket - Steering Column Mount	1
26	1529990	Screw	5
27	~~1382472~~		
	1502543	Nut	5
28	4697772	Grommet	2
29	4698509	Grommet	2
30	4309804	Capscrew (w/o Object Detect)	5
30	4309805	Capscrew (w/ Object Detect)	5
30	4349483	Capscrew (w/ Object Detect) (Alternate Parts)	5
31	**a** 4319935	Plug	3
32	1531557	Insert	2
32	1530243	Insert (Alternate Part)	2

FOOTNOTES:

a w/o Proximity Sensor

©2026 HYSTER COMPANY

NOTES

WASHER FLUID PLUMBING (FIGURE 1-10)

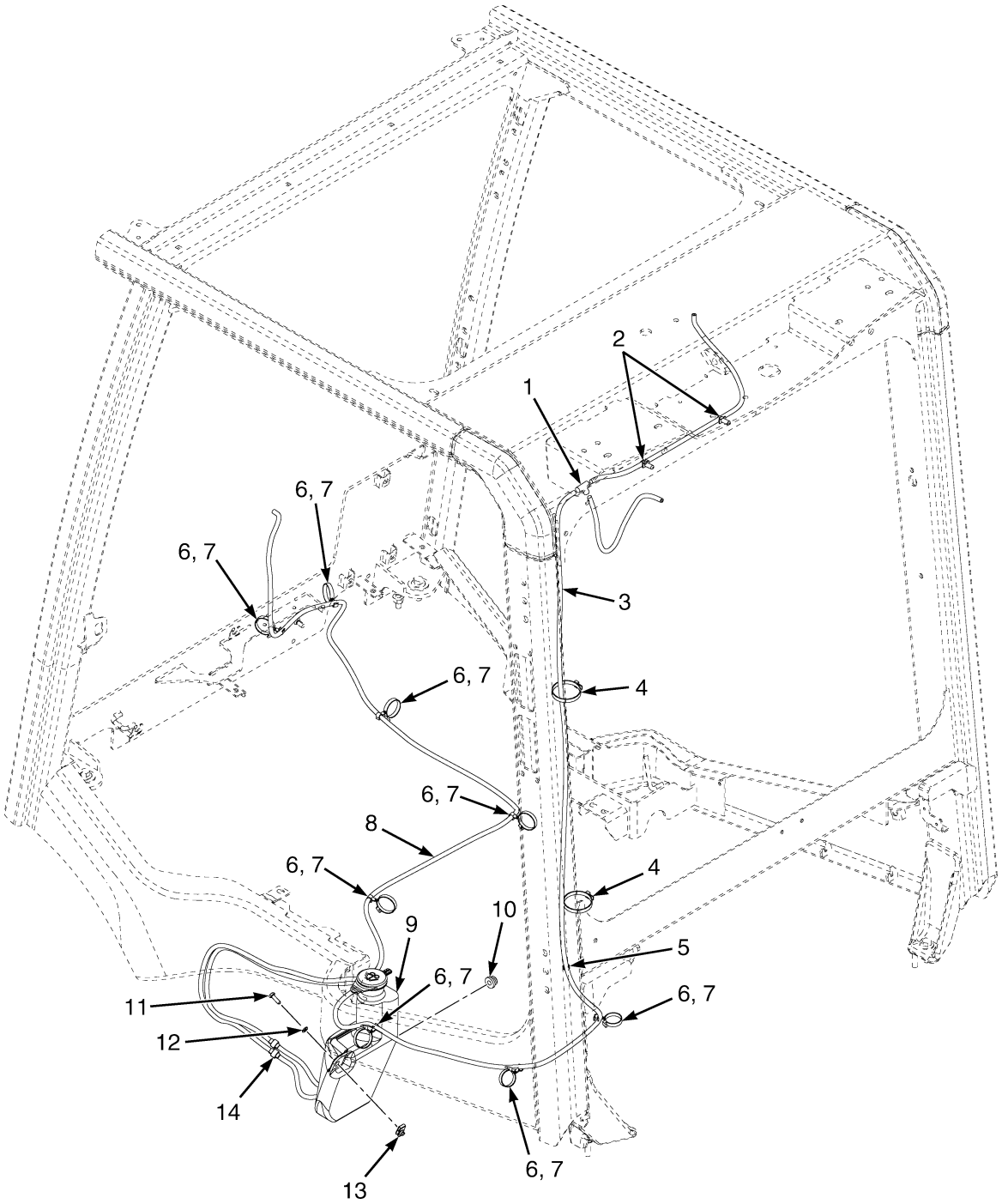

©2026 HYSTER COMPANY

WASHER FLUID PLUMBING

ITEM	PART NO.	DESCRIPTION	QTY
1	4697003	T-Fitting	1
2	4140361	Cable Clip	2
3	4697586	Kit-Window Washer (Rear)	1
3	4717591	Kit-Hose (Rear) (Alternate Part)	1
4	397676	Strap Clamp	2
5	1626984	Grommet	1
6	1644398	Clamp (Swivel)	8
7	1561871	Clamp (Swivel)	8
8	4696499	Kit-Window Washer - Hose (Front)	1
8	4717590	Kit-Hose (Window Washer) (Front) (Alternate Part)	1
9	4676344	Kit-Window Washer (☞Figure 1-11)	1
10	4278164	Grommet	1
11	292501	Capscrew	1
12	1476421	Washer	1
13	1566420	Nut (Foldover)	1
14	**a** 1326939	Cap	1

FOOTNOTES:

a Only used in absence of rear/top washer system.

WASHER BOTTLE KIT (FIGURE 1-11)

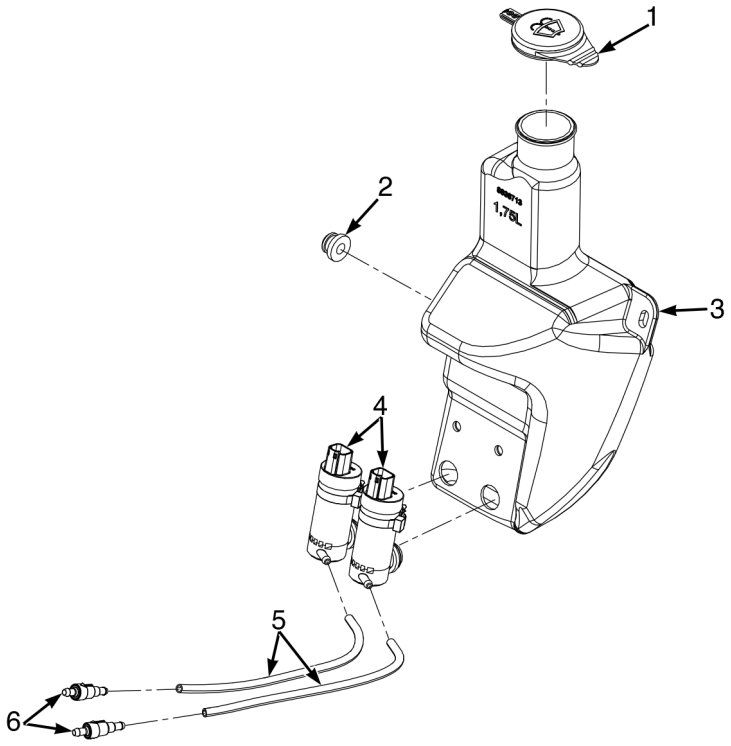

BP260327

ITEM	PART NO.	DESCRIPTION	QTY
	4676344	Kit-Window Washer	1
1	4304280	Cap	1
2	4304281	Grommet	1
3	. . . . .	Kit, Pump	2
4	4304282	Pump (w/ Grommet)	1
5	4304283	Hose	1
6	4304284	Check Valve	1

©2026 HYSTER COMPANY

FRONT SCREEN (FIGURE 1-12)
HEATED AND NON HEATED

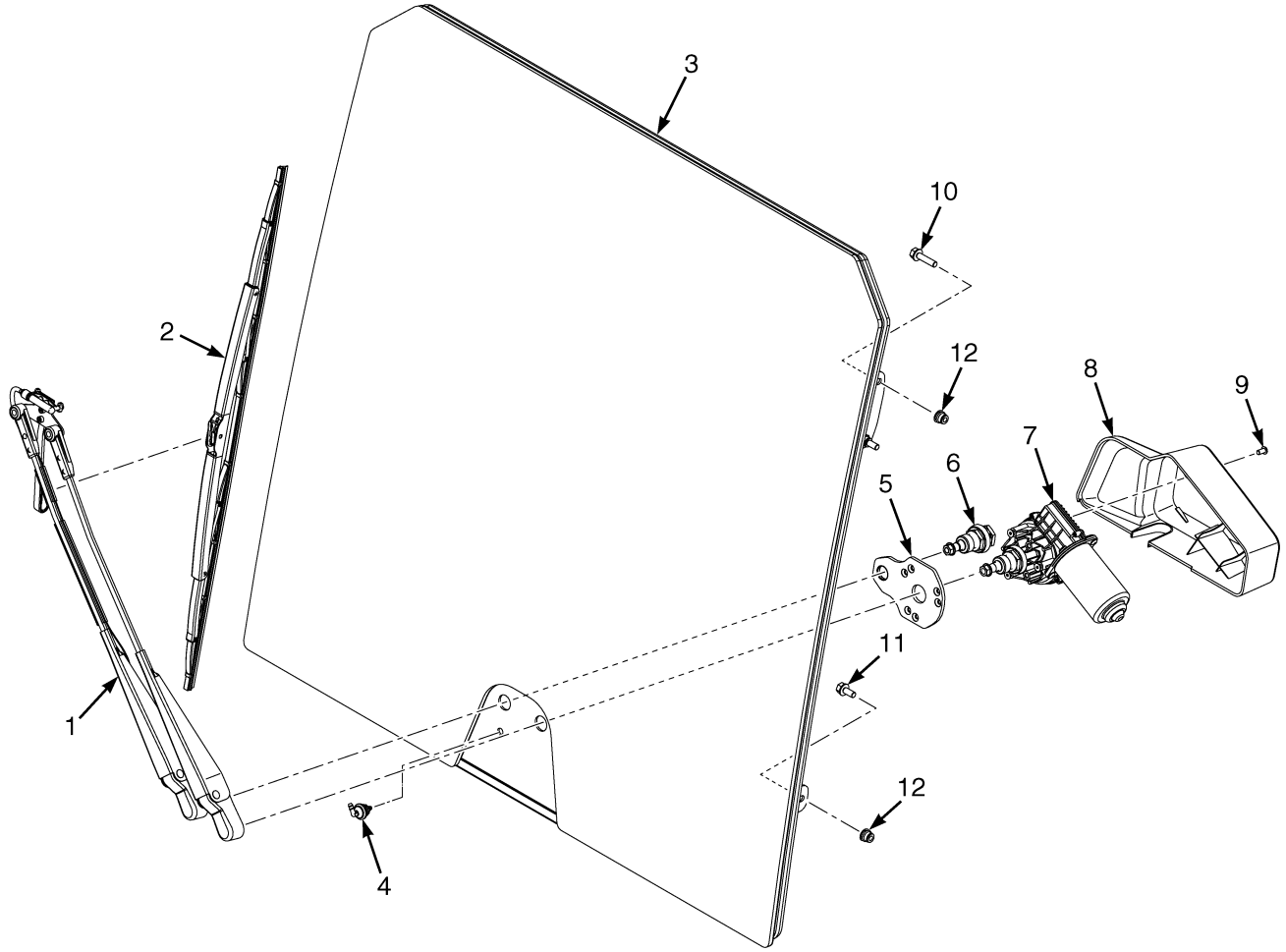

ITEM	PART NO.	DESCRIPTION	QTY
1	4688738	Kit-Wiper , Arm	1
2	4688732	Wiper Blade (1 deg)	1
3	4676340	Kit-Front Screen - 1 deg, Heated	1
3	4289123	Seal	1
3	4676339	Kit-Front Screen - 1 deg, non heated	1
3	4289123	Seal	1
3	4289129	Mount (Window Mounts)	4
4	4688729	Kit - Elbow fitting	1
5	4247543	Bracket - Wiper motor mount	1
6	4688886	Kit-Wiper - Driven Spindle	1
7	**b** 4688735	Kit-Wiper Motor - Front	1
7	**c** 4740624	Wiper Motor, Front	1
8	4693856	Cover - Wiper Motor	1
9	4293365	Screw	1
10	1586627	Capscrew	2
11	1608654	Capscrew	2
12	1531557	Insert	4
	a 4676344	Kit-Window Washer (☞Figure 1-10)	1
	c 4740625	Kit, Wiper Motor Accessories bag	1

FOOTNOTES:

a Not Illustrated
b → 7/2024
c 7/2024 →

©2026 HYSTER COMPANY

FRONT SCREEN (FIGURE 1-13)
NON HEATED — ASSEMBLY

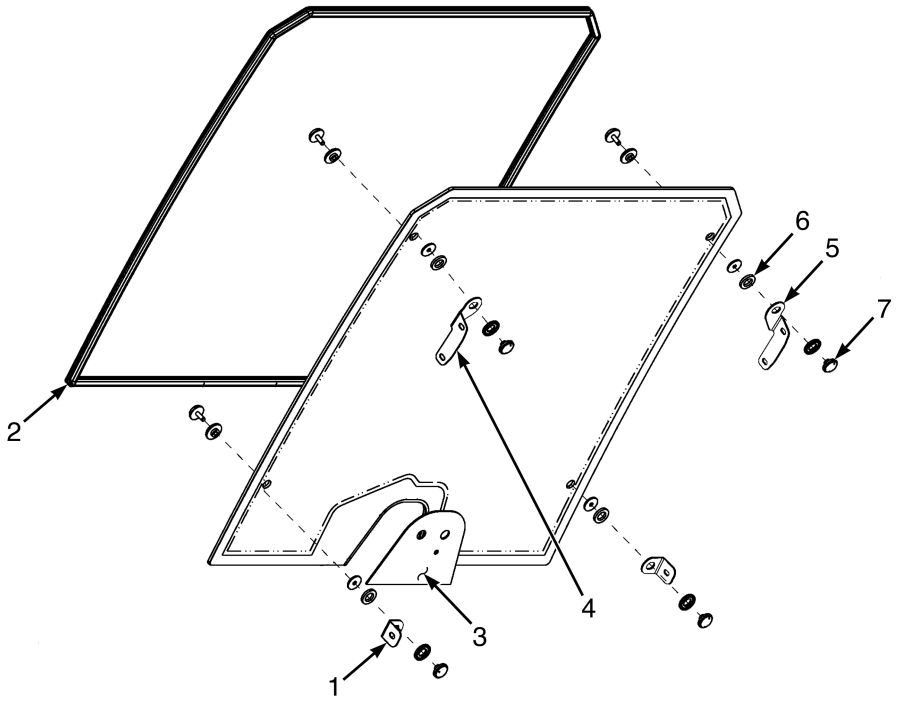

BP260277

ITEM	PART NO.	DESCRIPTION	QTY
	4676339	Kit-Front Screen - 1 deg, non heated	1
1	. . . . .	4327981	2
2	4289123	Seal	1
3	. . . . .	Bracket, Wiper Motor	1
4	. . . . .	4327980	1
5	. . . . .	4327979	1
6	. . . . .	Washer	4
7	4289129	Mount (Window Mounts)	4

REAR SCREEN ASSEMBLY (FIGURE 1-14)
AND ATTACHING PARTS (→ 1/2024)

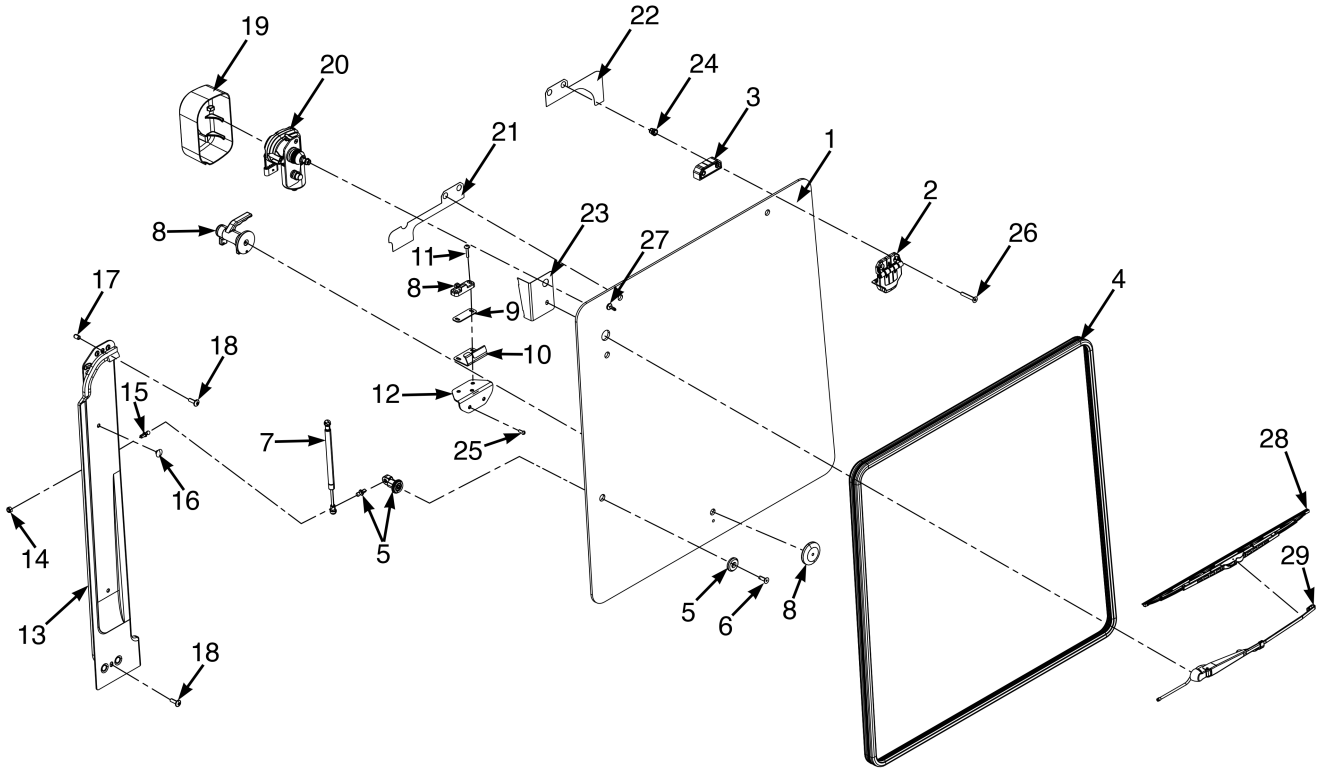

©2026 HYSTER COMPANY

REAR SCREEN ASSEMBLY
AND ATTACHING PARTS (→ 1/2024)

ITEM	PART NO.	DESCRIPTION	QTY
1	4676345	Kit-Rear Screen	1
1	4289131	Rear Window	1
2	4327985	Hinge (Assembly)	2
3	4289130	Spacer	2
4	4327986	Seal (Rear Window)	1
5	4327987	Mount (Rear Gas Shock)	1
6	. . . . .	Screw	1
7	4289139	Gas Spring	1
8	4327988	Latch (Assembly)	1
9	4289140	Shim	AR
10	. . . . .	Plate	1
11	. . . . .	Screw	2
12	4289138	Bracket (Rear Screen Latch)	1
13	4708168	Kit-Rear Screen - LH Panel	1
13	4727816	Kit-Rear Screen - LH Panel (Alternate Part)	1
14	4328014	Nut	1
15	4328005	Ball Stud - Rear Window	1
16	2027940	Plug	2
17	1540805	Cap	2
18	4707890	Capscrew	3
19	4294903	Cover	1
20	4701934	Kit-Wiper Motor (Rear)	1
21	**a** 4721879	Seal (LH)	1
22	**a** 4721876	Seal (RH)	1
23	4712611	Bracket (Cab Harness)	1
24	1530243	Insert	4
25	4196031	Screw	2
26	4724749	Capscrew	4
27	4688729	Kit - Elbow fitting	1
28	4688724	Kit-Wiper	1
29	4688725	Wiper Blade	1

FOOTNOTES:

a → 8/2022

REAR SCREEN ASSEMBLY (FIGURE 1-15)
AND ATTACHING PARTS (1/2024 ↔ 11/2024)

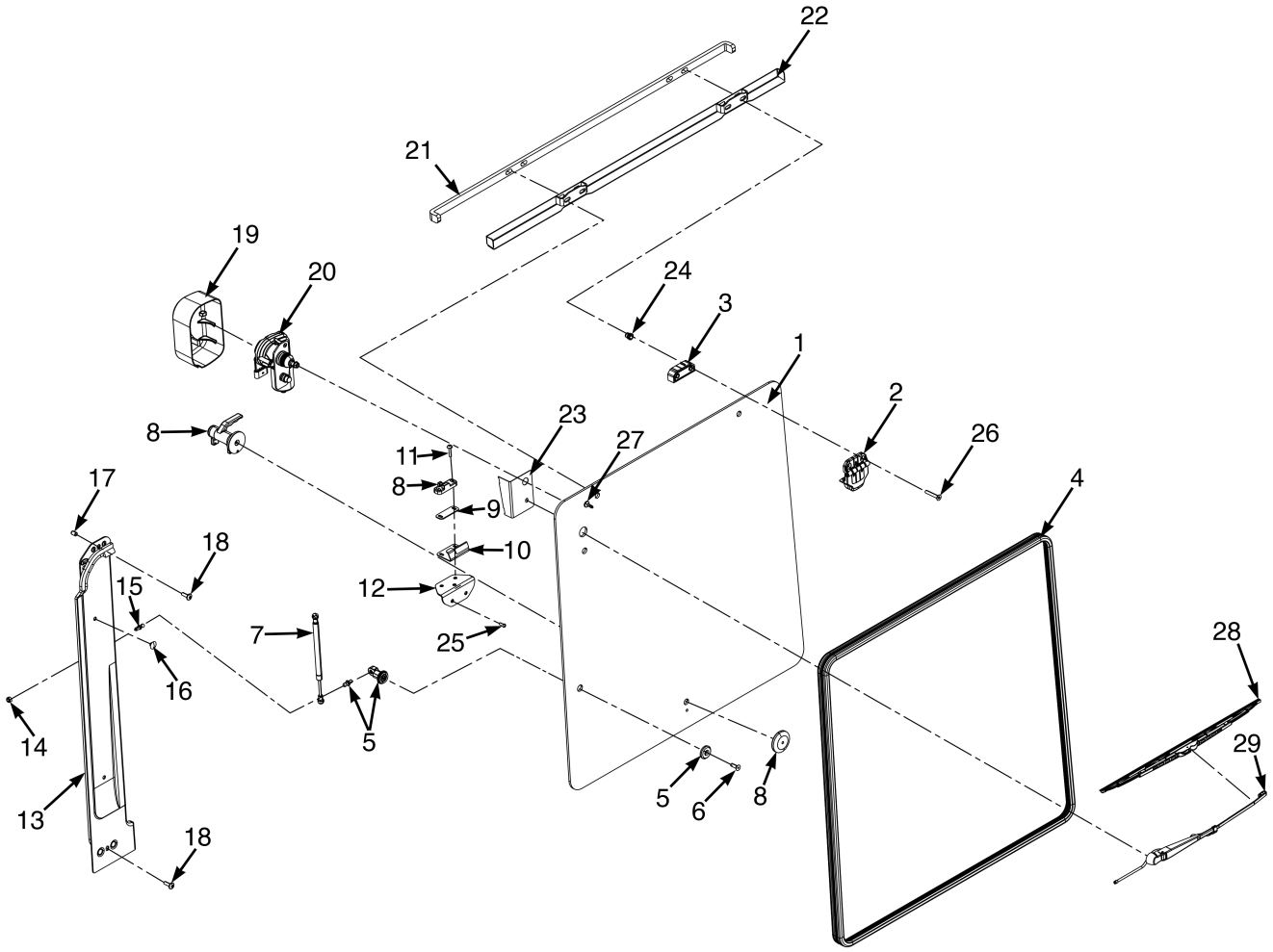

BP200566

©2026 HYSTER COMPANY

REAR SCREEN ASSEMBLY
AND ATTACHING PARTS (1/2024 ↔ 11/2024)

ITEM	PART NO.	DESCRIPTION	QTY
1	4676345	Kit-Rear Screen	1
1	4289131	Rear Window	1
2	4327985	Hinge (Assembly)	2
3	4289130	Spacer	2
4	4327986	Seal (Rear Window)	1
5	4327987	Mount (Rear Gas Shock)	1
6	. . . . .	Screw	1
7	4289139	Gas Spring	1
8	4327988	Latch (Assembly)	1
9	4289140	Shim	AR
10	. . . . .	Plate	1
11	. . . . .	Screw	2
12	4289138	Bracket (Rear Screen Latch)	1
13	4708168	Kit-Rear Screen - LH Panel	1
13	4727816	Kit-Rear Screen - LH Panel (Alternate Part)	1
14	4328014	Nut	1
15	4328005	Ball Stud - Rear Window	1
16	2027940	Plug	2
17	1540805	Cap	2
18	4707890	Capscrew	3
19	4294903	Cover	1
20	**a** 4701934	Kit-Wiper Motor (Rear)	1
20	**b** 4740630	Wiper Motor, Rear	1
21	4376525	Bracket (Assembly)	1
21	4376524	Foam	1
22	4376085	Bracket Wldmt (Dripshield)	1
23	4712611	Bracket (Cab Harness)	1
24	1530243	Insert	4
25	4196031	Screw	2
26	4724749	Capscrew	4
27	4688729	Kit - Elbow fitting	1
28	4688724	Kit-Wiper	1
29	4688725	Wiper Blade	1
	b 4740631	Kit, Wiper Motor Accessories Bag	1
	b 4740632	Kit, Wiper Motor Accessories Bag	1

FOOTNOTES:

a → 7/2024

b 7/2024 →

REAR SCREEN (FIGURE 1-16)
AND ATTACHING PARTS (11/2024 →)

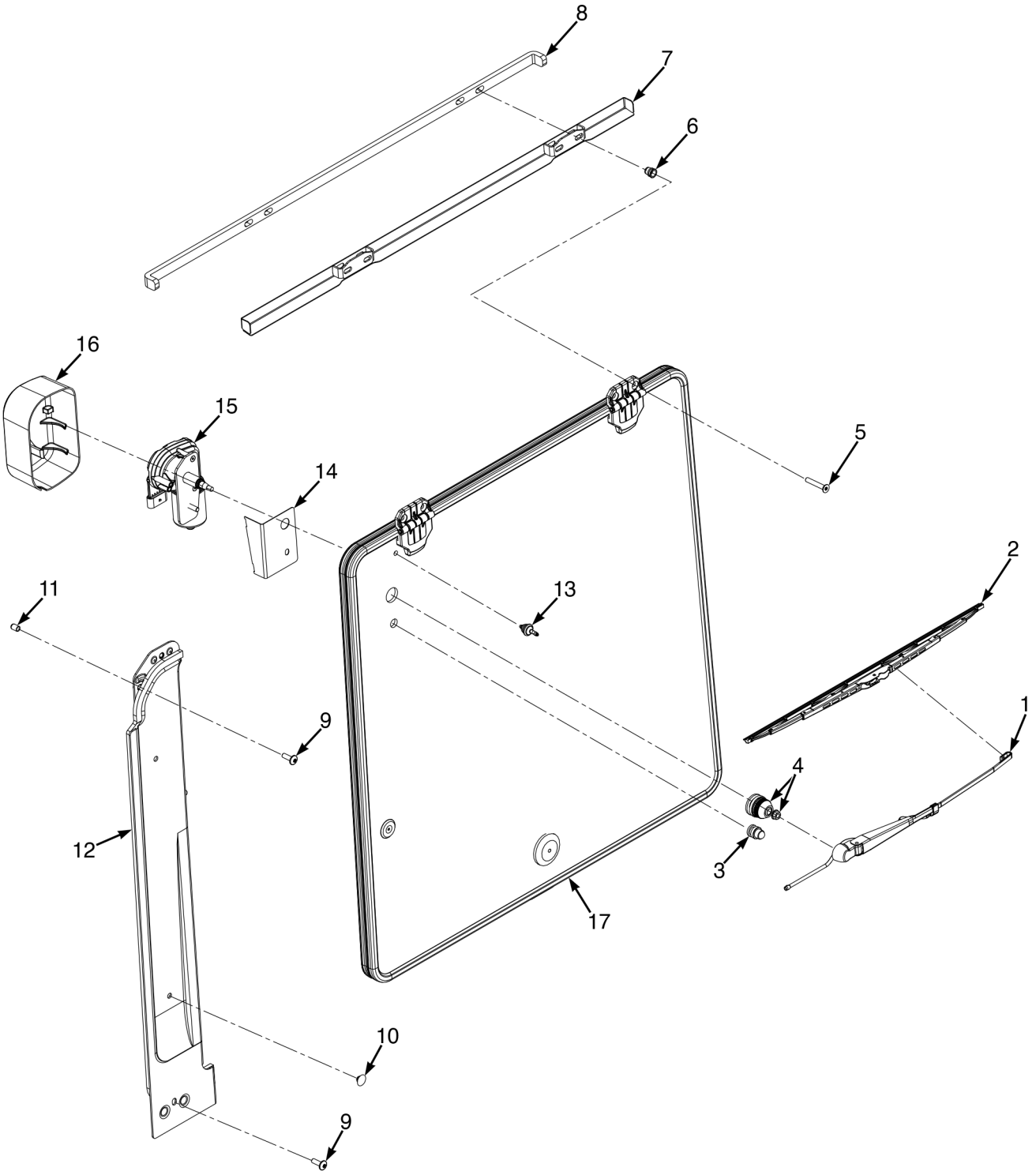

©2026 HYSTER COMPANY

REAR SCREEN
AND ATTACHING PARTS (11/2024 →)

ITEM	PART NO.	DESCRIPTION	QTY
1	4688725	Wiper Blade	1
2	4688724	Kit-Wiper	1
3	4740632	Kit, Wiper Motor Accessories Bag	1
4	4740631	Kit, Wiper Motor Accessories Bag	1
5	4724749	Capscrew	4
6	1530243	Insert	4
7	4376525	Bracket (Assembly)	1
7	4376085	Bracket Wldmt (Dripshield)	1
8	4376524	Foam	1
9	4707890	Capscrew	3
10	2027940	Plug	2
11	1540805	Cap	2
12	4727816	Kit-Rear Screen - LH Panel	1
13	4688729	Kit - Elbow fitting	1
14	4712611	Bracket (Cab Harness)	1
15	4740630	Wiper Motor, Rear	1
16	4294903	Cover	1
17	4676345	Kit-Rear Screen (☞Figure 1-17)	1

©2026 HYSTER COMPANY

REAR SCREEN ASSEMBLY (FIGURE 1-17)

(11/2024 →)

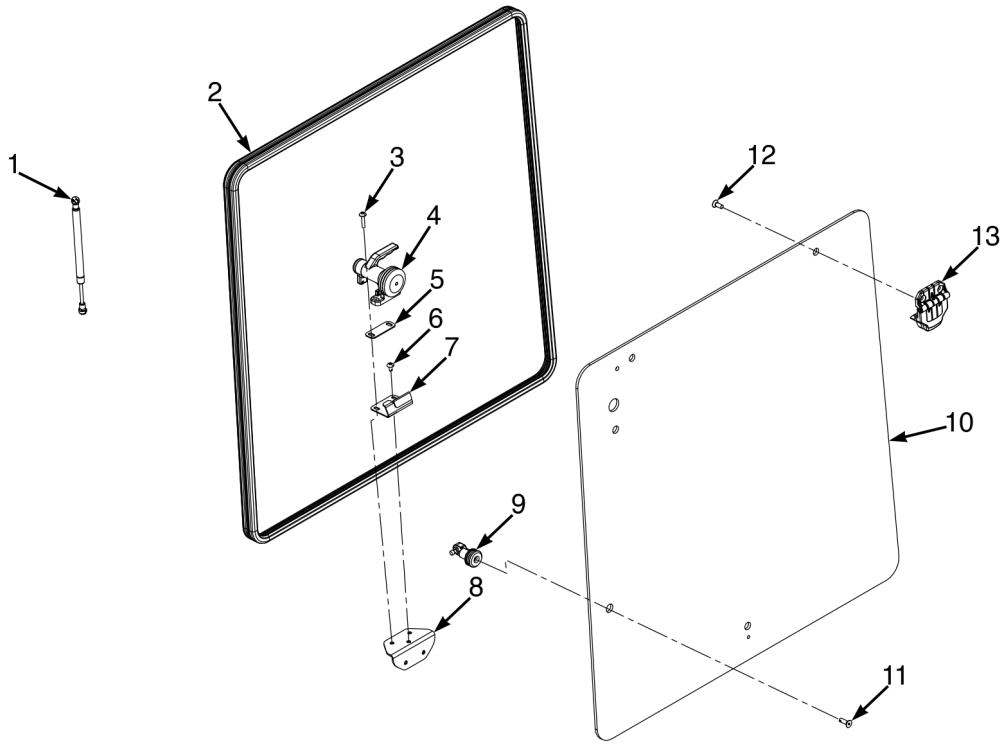

BP200635

ITEM	PART NO.	DESCRIPTION	QTY
	4676345	Kit-Rear Screen	1
1	. . . . .	Gas Spring	1
2	8861347	Seal	1
3	8861357	Capscrew	2
4	8861348	Latch	1
5	8861358	Shim	AR
6	8861318	Capscrew	1
7	8861360	Bracket	1
8	8861352	Bracket	1
9	. . . . .	Gas Shock Mount	1
10	. . . . .	Glass	1
11	. . . . .	Capscrew	1
12	8861350	Capscrew	2
13	8861344	Hinge	2

©2026 HYSTER COMPANY

TOP SCREEN (FIGURE 1-18)

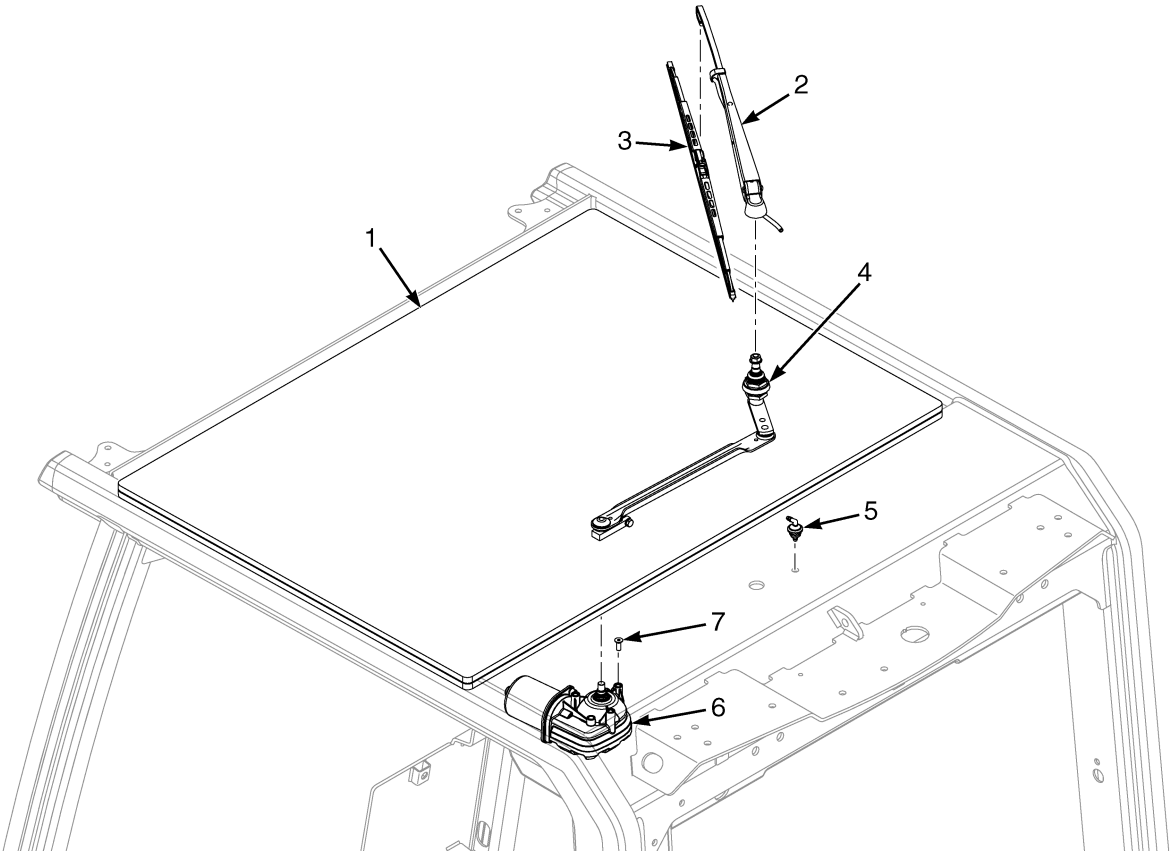

ITEM	PART NO.	DESCRIPTION	QTY
1	~~4676336~~		
	4724706	Kit-Top Screen (Glass Only)	1
2	4688731	Kit-Wiper - Wiper Arm (w/ spray nozzle)	1
3	4694555	Wiper Blade , Top	1
4	4688730	Kit-Motor - Linkage	1
5	4688729	Kit - Elbow fitting	1
6	4701933	Kit-Wiper Motor - top	1
7	4331804	Screw	3

RAIN TOP (FIGURE 1-19)

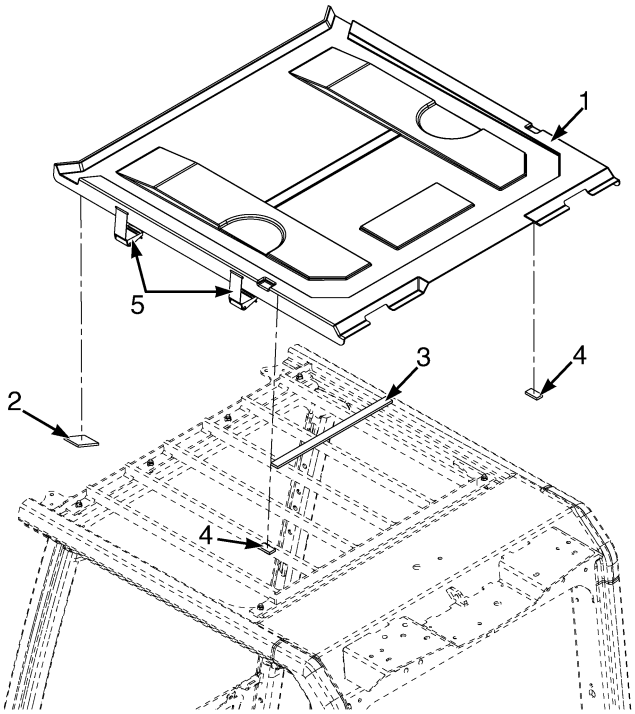

BP001381

ITEM	PART NO.	DESCRIPTION	QTY
	4278081	Cover - Assembly top	1
1	4277103	Cover (Top)	1
2	4325541	Seal	2
3	4032347	Seal	1
4	4215385	Seal	2
5	4277104	Belt	4

©2026 HYSTER COMPANY

CABIN DOORS (FIGURE 1-20)
STEEL DOORS

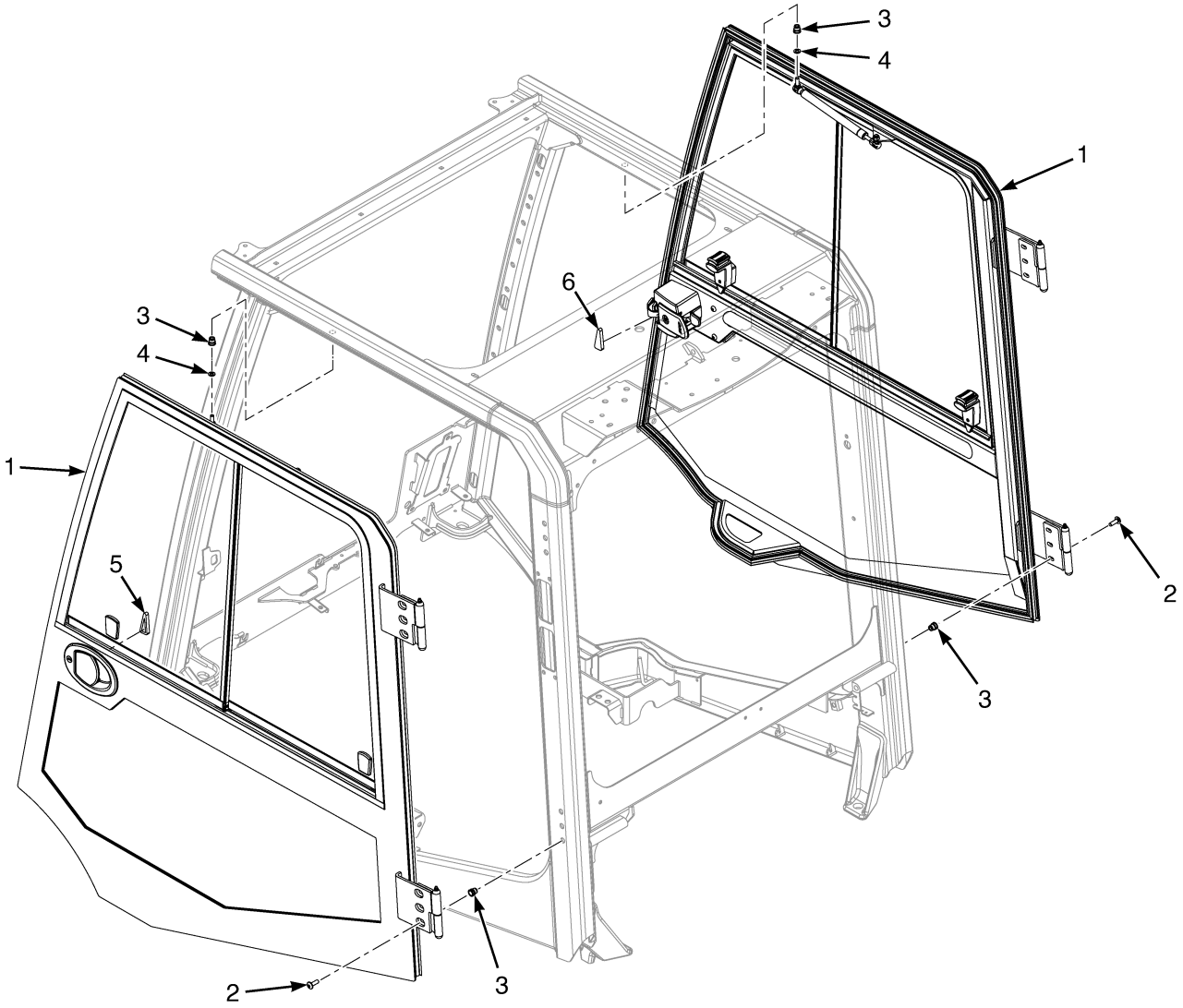

BP200446

ITEM	PART NO.	DESCRIPTION	QTY
1	4676348	Kit-Door - Steel (LH and RH) (☞Figure 1-21, ☞Figure 1-22).....	1
2	4196035	Screw	12
2	4707890	Capscrew (Alternate Part)	12
3	1531557	Insert	14
3	1530243	Insert (Alternate Part)	14
4	~~4166624~~		
	1581556	Washer	2
5	4727575	Foam (LH)	1
6	4727576	Foam (RH)	1

©2026 HYSTER COMPANY

NOTES

CABIN DOORS (FIGURE 1-21)
STEEL DOORS — LH ASSEMBLY

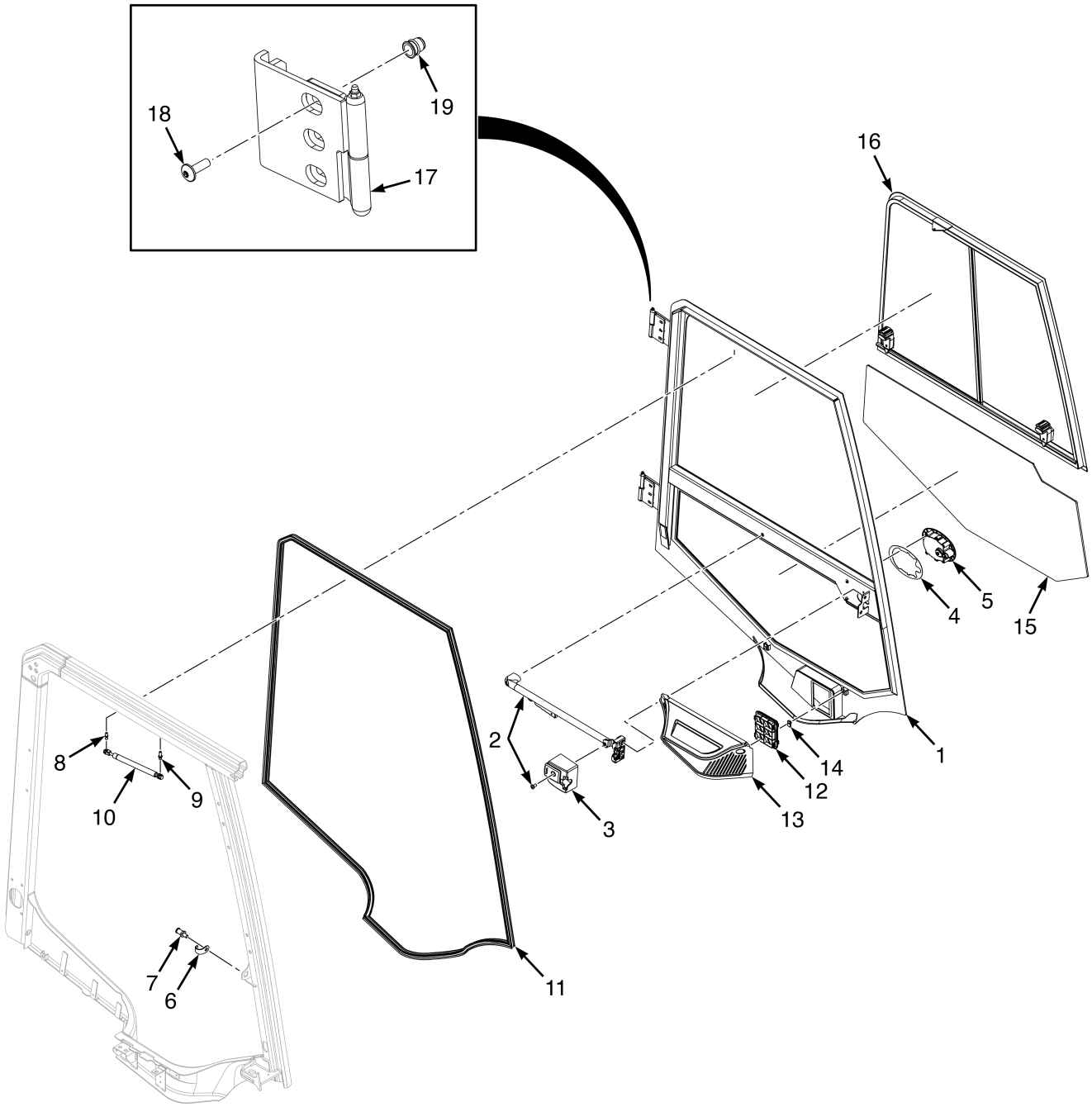

BP200511

©2026 HYSTER COMPANY

CABIN DOORS

STEEL DOORS – LH ASSEMBLY

ITEM	PART NO.	DESCRIPTION	QTY
	4676348	Kit-Door - Steel (LH and RH)	1
1	4289141	Door - LH Assembly	1
1	4745184	Nut (Striker)	1
2	4327999	Kit-Latch	1
3	4328000	Cover	1
4	4328001	Gasket - Handle	1
5	4328002	Door Handle	1
6	4328003	Guard - Striker	1
7	4328004	Striker	1
8	4328005	Ball Stud - Rear Window	1
9	4328006	Ball Stud	1
10	4328007	Gas Spring	1
11	4328008	Gasket - LH Door	1
12	4289143	Vent	1
13	4289144	Cover - Pressure Vent	1
14	4328009	Nut	2
15	4368018	Window - Lower (LH)	1
16	4388168	Sliding Window (LH)	1
17	4745112	Hinge (LH)	2
18	4707890	Capscrew	6
19	1530243	Insert	6

©2026 HYSTER COMPANY

CABIN DOORS (FIGURE 1-22)
STEEL DOORS — RH ASSEMBLY

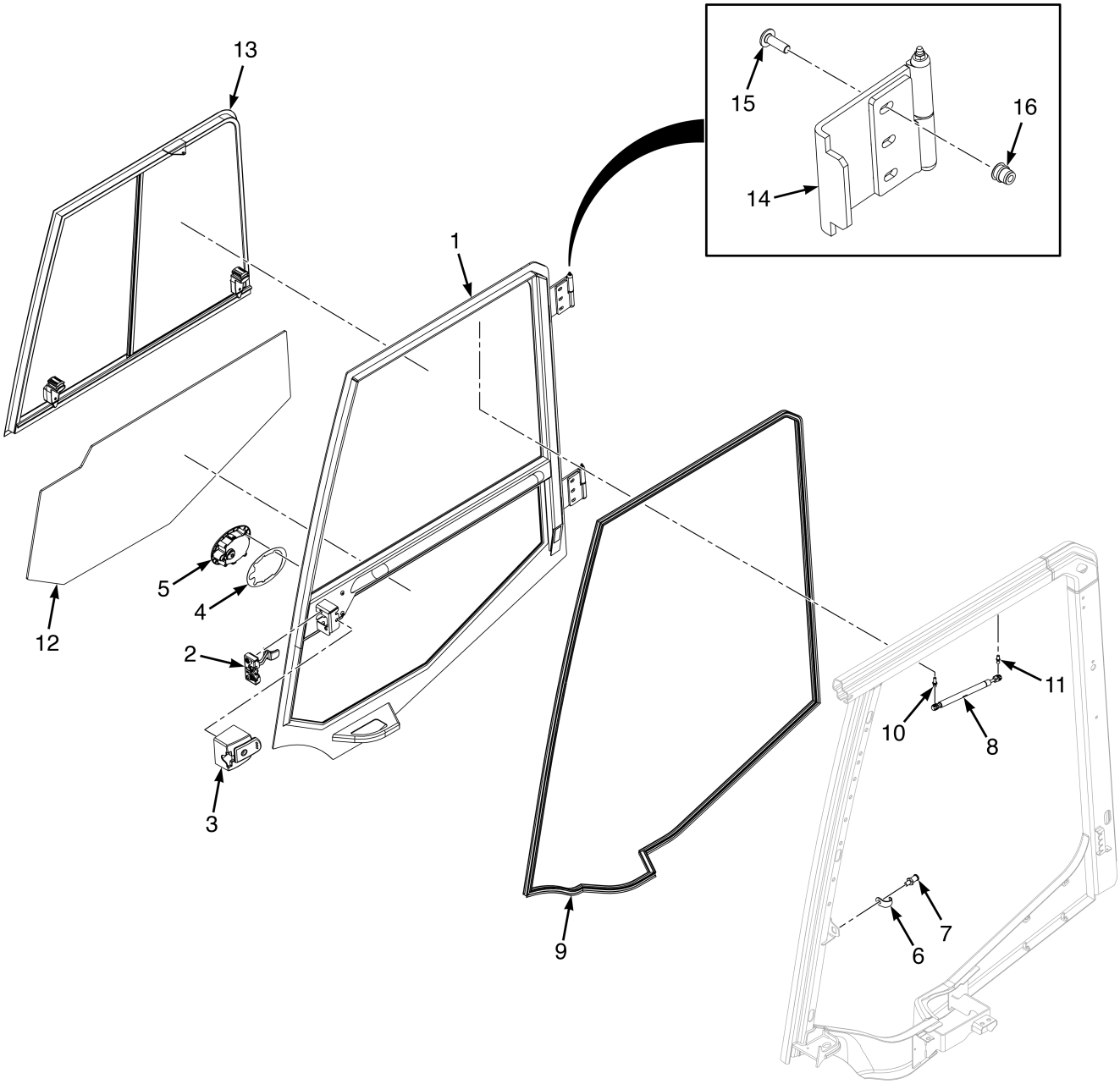

©2026 HYSTER COMPANY

CABIN DOORS

STEEL DOORS – RH ASSEMBLY

ITEM	PART NO.	DESCRIPTION	QTY
	4676348	Kit-Door - Steel (LH and RH)	1
1	4289142	Door - RH Assembly	1
1	4745184	Nut (Striker)	1
2	4328010	Latch	1
3	4328011	Cover	1
4	4328001	Gasket - Handle	1
5	4328012	Door Handle	1
6	4328003	Guard - Striker	1
7	4328004	Striker	1
8	4328007	Gas Spring	1
9	4328013	Gasket - RH Door	1
10	4328005	Ball Stud - Rear Window	1
11	4328006	Ball Stud	1
12	4386234	Glass (RH, Lower)	1
13	4388167	Sliding Window (RH)	1
14	4745113	Hinge (RH)	2
15	4707890	Capscrew	6
16	1530243	Insert	6

©2026 HYSTER COMPANY

CABIN DOORS (FIGURE 1-23)

PVC DOORS (→ 7/2024)

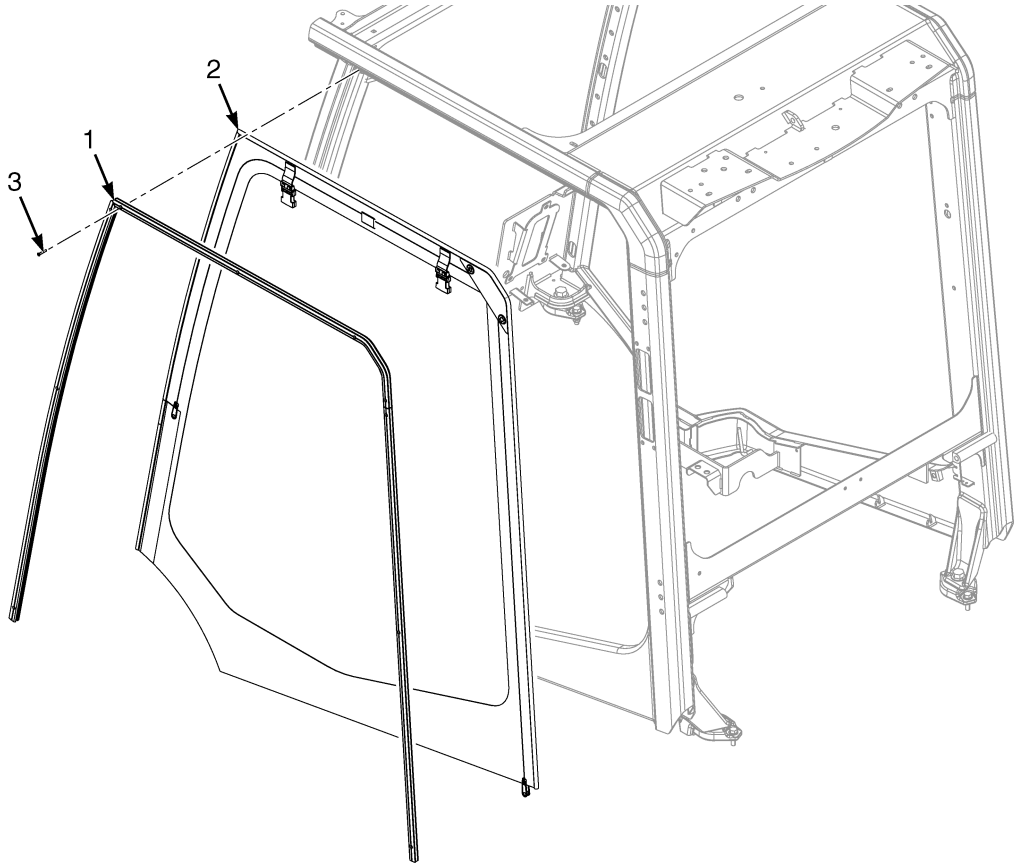

ITEM	PART NO.	DESCRIPTION	QTY
	4676346	Kit-Door - PVC	1
1	4327096	Kit - Aluminum Frame, LH and RH	1
1	4327100	Kit - Aluminum Frame, LH	1
1	4327101	Kit - Aluminum Frame, RH	1
2	4327097	Kit - PVC, LH and RH	1
2	4327098	Door Pvc - PVC, LH	1
2	4327099	Door Pvc - PVC, RH	1
3	**a** 2109965	Capscrew	20

FOOTNOTES:

a hardware is not part of kit, sold separately.

©2026 HYSTER COMPANY

CABIN DOORS (FIGURE 1-24)

PVC DOORS (7/2024 →)

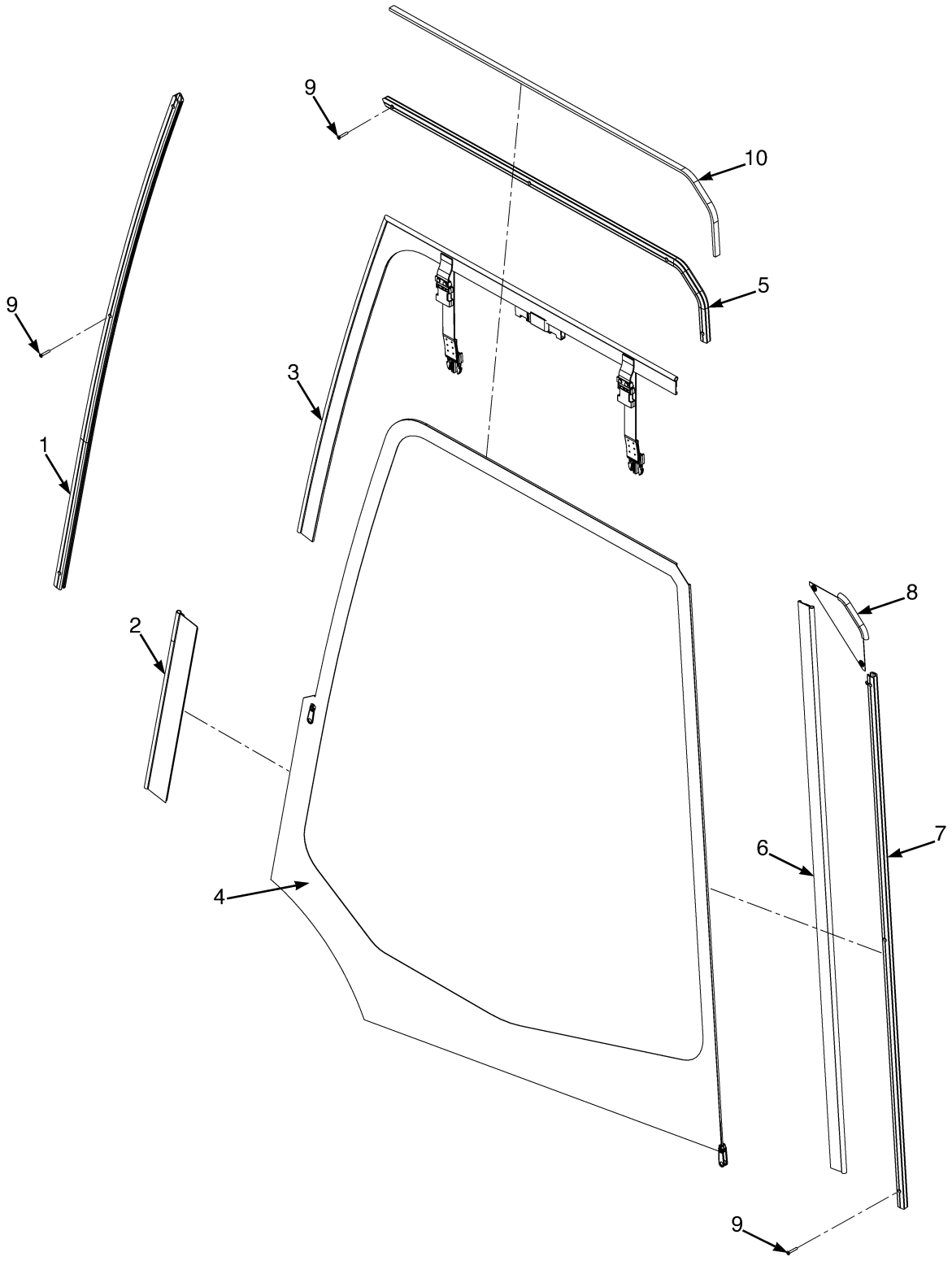

ITEM	PART NO.	DESCRIPTION	QTY
	4676346	Kit-Door - PVC	1
1	4741224	Rail (RH, Front)	1
1	4741232	Rail (LH, Front)	1
2	4741219	Door (Flap)	2
3	4741220	Door (RH, Front, Zip)	1
3	4741228	Door (LH, Front, Zip)	1
4	4741222	Door (RH, PVC)	1
4	4741230	Door (LH, PVC)	1
5	4741225	Rail (RH, Top)	1
5	4741233	Rail (LH, Top)	1
6	4741221	Door (RH, Rear, Zip)	1
7	4741226	Rail (RH, Rear)	1
7	4741234	Rail (LH, Rear)	1
8	4741223	Door (RH, Top Corner)	1
8	4741231	Door (LH, Top Corner)	1
9	**a** 2109965	Capscrew	20
10	**a** 4738211	Seal	2

FOOTNOTES:

a Part is not included in kit, sold separately.

©2026 HYSTER COMPANY

NOTES

HEADLINER (FIGURE 1-25)

CAB

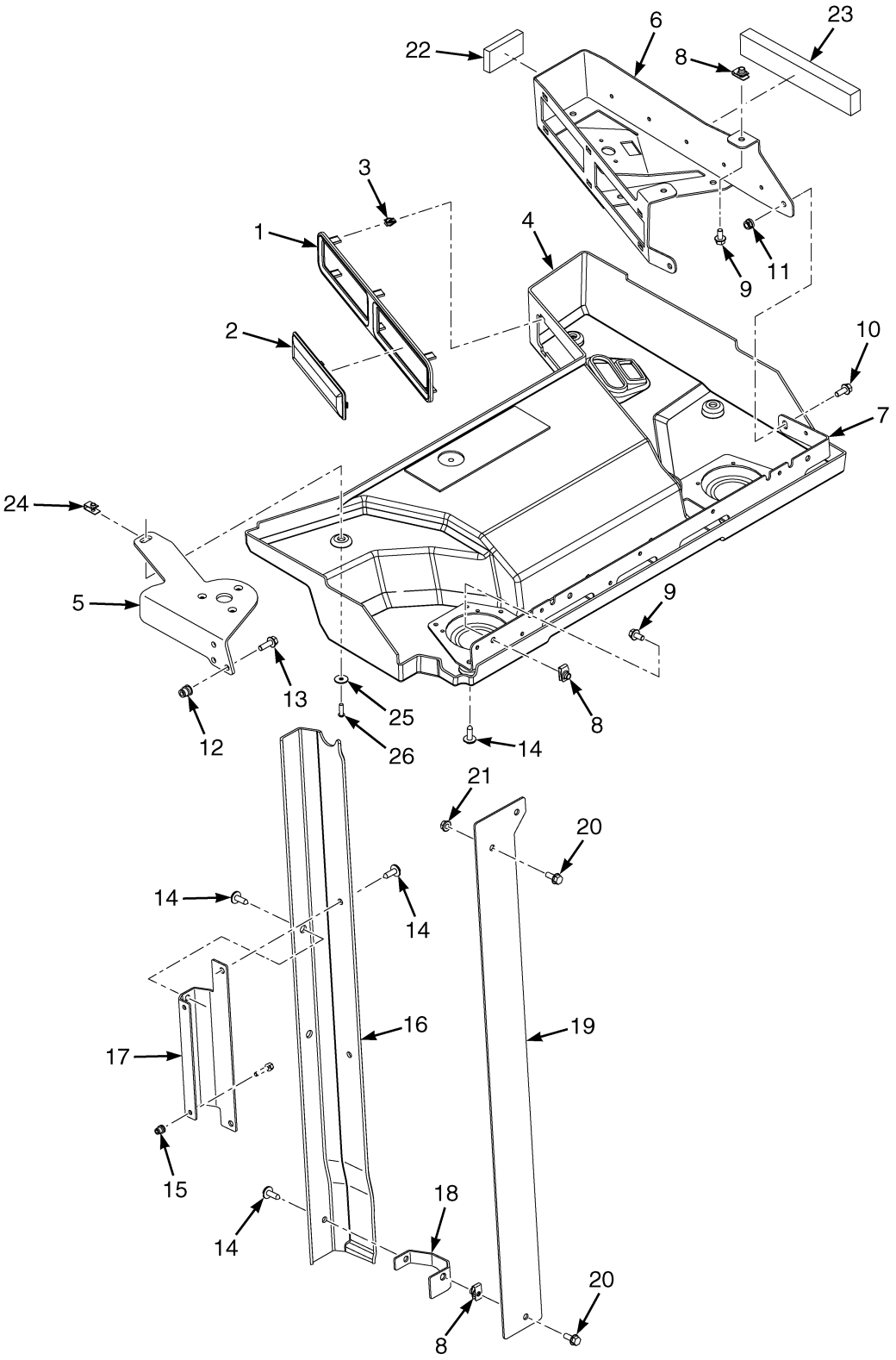

©2026 HYSTER COMPANY

HEADLINER
CAB

ITEM	PART NO.	DESCRIPTION	QTY
1	4694275	Bezel - Cab Radio and Switch Bank	1
1	4732943	Bezel - Cab Radio and Switch Bank (Alternate Part)	1
2	4694274	Cover - Radio	1
2	4732944	Cover - Radio (Alternate Part)	1
3	2065667	Clip	6
4	~~4710184~~		
	4721741	Headliner	1
4	4733027	Headliner (Alternate Part)	1
5	4311882	Bracket - Headliner and Top Wiper	1
5	~~4332131~~		
	4347773	Bracket (Alternate Part)	1
6	4275913	Bracket Wldmt - RH Headliner	1
6	4372709	Bracket Wldmt - RH Headliner (Alternate Part)	1
7	4269401	Bracket - Cab, Rear, Upper	1
8	1480237	Nut (Foldover)	6
9	~~4109993~~		
	1527879	Capscrew	5
10	1527880	Capscrew	2
11	4187690	Locknut	2
12	1530243	Insert	3
13	1510113	Capscrew	3
14	4265998	Rivet - Push	15
15	1531558	Insert	2
16	~~4315193~~		
	4347771	Cover	1
17	4315195	Bracket - LH OHG Leg Harness Cover	1
18	4315194	Bracket - LH OHG Harness Cover	1
19	**a** ~~4269407~~		
	4359210	Cover	1
20	**a** 1527880	Capscrew	3
21	**a** ~~1382472~~		
	1502543	Nut	2
22	4331031	Foam	1
23	4328709	Foam	1
24	1350215	Nut (Foldover)	1
25	1709980	Washer	1
26	4304265	Screw	1

FOOTNOTES:

a Cab without rear screen only.

©2026 HYSTER COMPANY

HEADLINER (FIGURE 1-26)
NO CAB

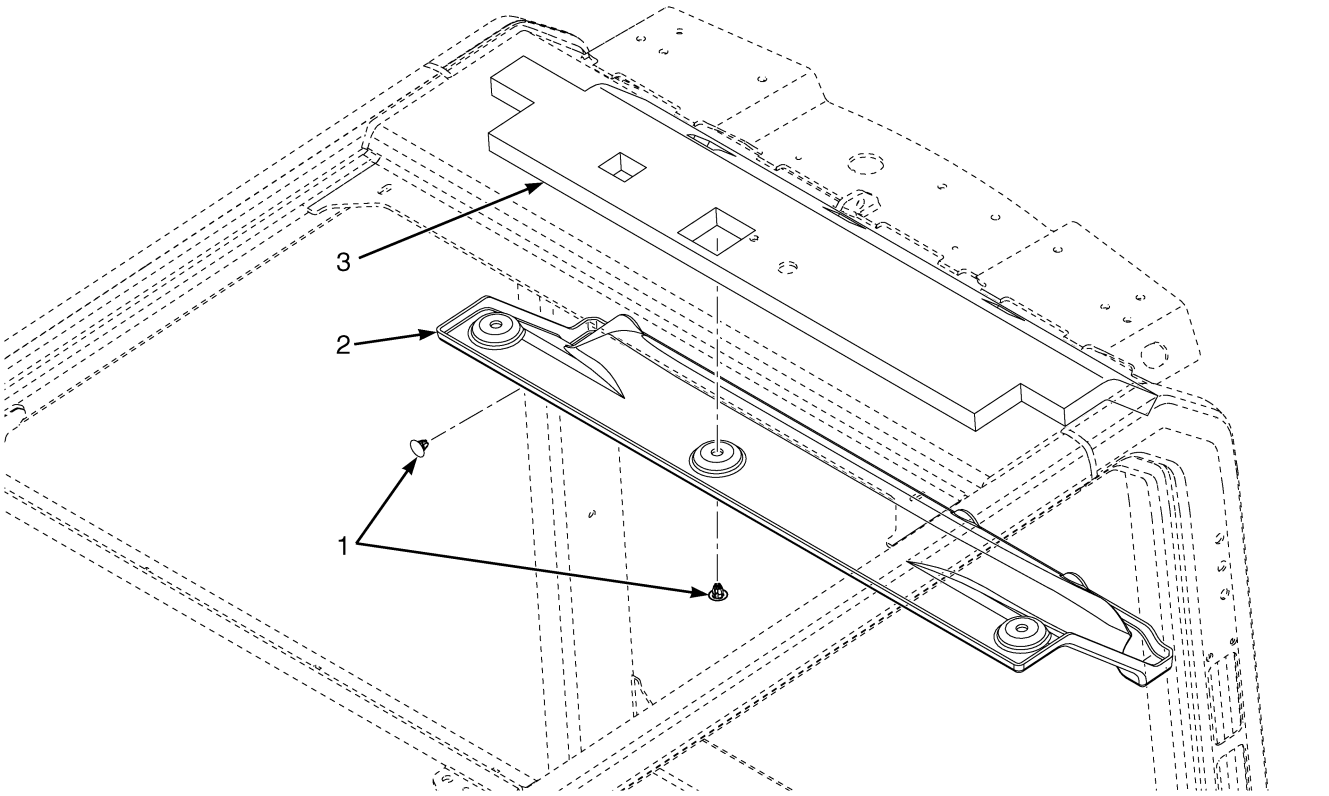

ITEM	PART NO.	DESCRIPTION	QTY
1	4271673	Fastener	6
2	4269393	Headliner (1deg, Fig8 OHG)	1
3	4270406	Foam Lining (1deg, Fig8 OHG)	1

©2026 HYSTER COMPANY

HEADLINER (FIGURE 1-27)
NO CAB — ALTERNATE CONFIGURATION

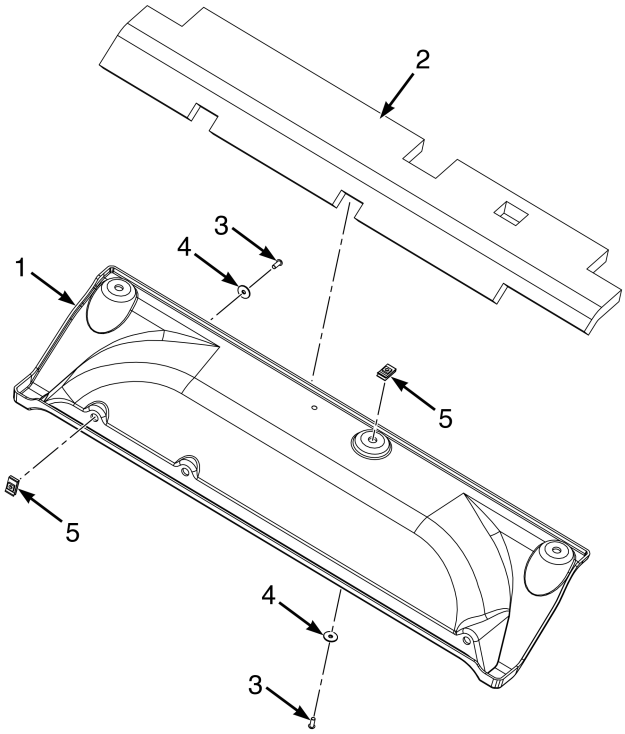

BP260290

ITEM	PART NO.	DESCRIPTION	QTY
1	4707424	Headliner (w/o Cab)	1
2	4270406	Foam Lining	1
3	1510126	Screw (Button Head)	6
4	1709980	Washer	6
5	1566420	Nut (Foldover)	6

CAB HVAC SYSTEM (FIGURE 1-28)

2.1L (→ 8/2022)

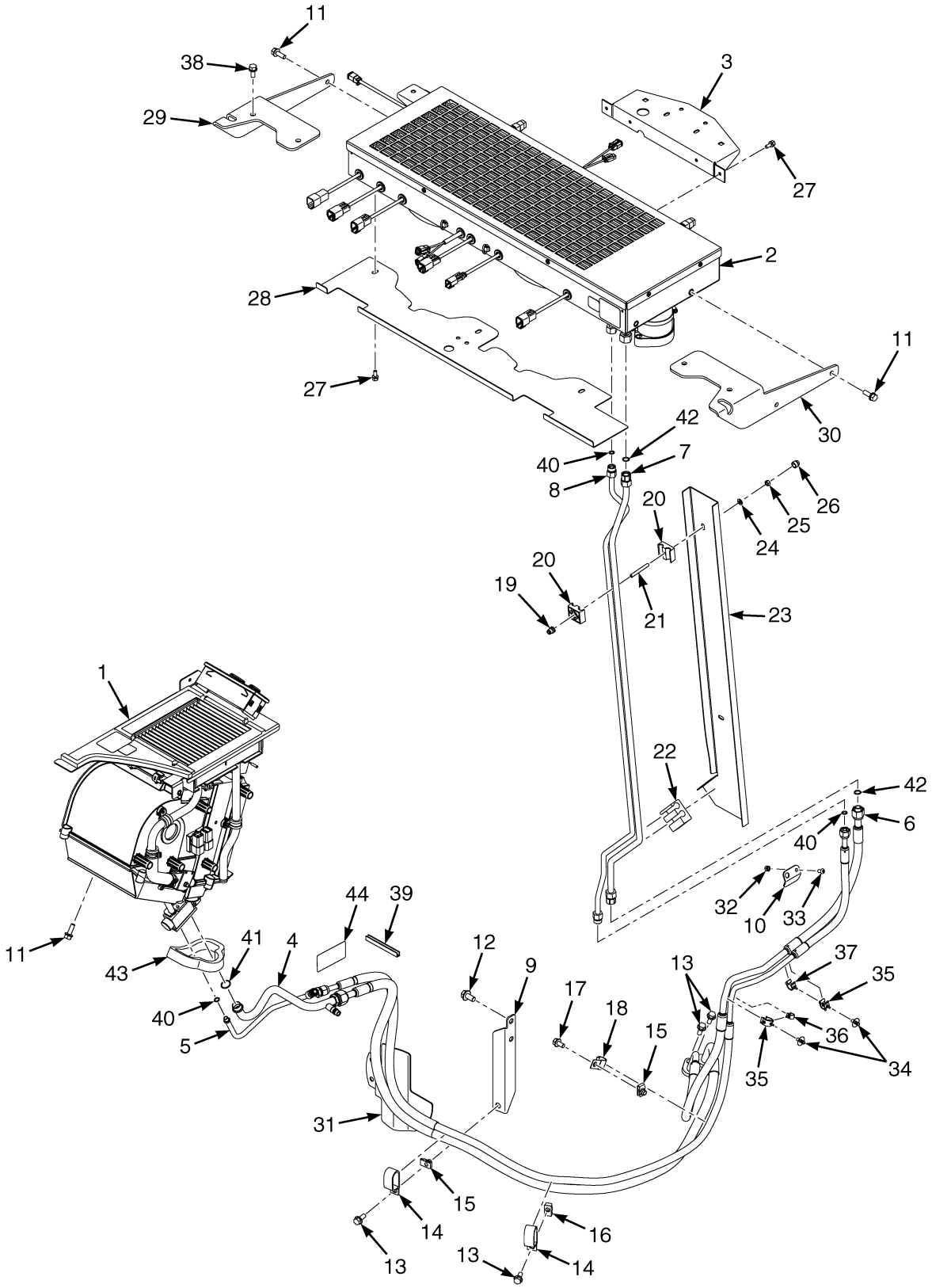

©2026 HYSTER COMPANY

CAB HVAC SYSTEM

2.1L (→ 8/2022)

ITEM	PART NO.	DESCRIPTION	QTY
1	4708264	Kit-Heater And Airco (☞Figure 1-33)	1
1	4730523	Kit-Heater And Airco (Alternate Part) (☞Figure 1-35)	1
2	4676351	Condenser	1
3	4708075	Bracket - Condenser, Rear Light	1
4	4708881	Hose Assy - #10 A/C Refrigerant	1
5	4708883	Tube Assy	1
6	4708882	Tube Assy	1
7	4691293	Tube Assy - #8 A/C Refrigerant	1
8	4691291	Tube Assy - #6 A/C Refrigerant	1
9	4268955	Bracket	1
10	4709493	Plate - HVAC A/C Hose	1
11	1583611	Capscrew	7
12	1527883	Capscrew	2
13	1527880	Capscrew	4
14	251994	Clamp	2
15	1480237	Nut (Foldover)	2
16	1398062	Nut (Fold Over)	1
17	~~4109993~~		
	1527879	Capscrew	1
18	325804	Clamp	1
19	1531558	Insert	2
20	4700802	Clamp (2 halves)	2
21	4244205	Stud	2
22	4709492	Foam - Seal, Rear A/C Tube	1
23	4243992	Heat Shield	1
24	1506738	Washer	2
25	4043633	Nut	2
26	1699334	Cap	2
27	1693371	Capscrew	7
28	4700976	Plate	1
29	4715158	Bracket Wldmt (Assembly) (RH)	1
30	4715157	Bracket Wldmt (Assembly) (LH)	1
31	**a** 4291709	Heat Shield - DPF	1
32	302399	Nut	1
33	4273298	Screw	1
34	1543842	Clamp (Base)	2
35	1502057	Clamp	2
36	1573549	Clamp (Swivel)	1
37	1542439	Clamp (Swivel)	1
38	1608654	Capscrew	1
39	4223240	Trim	1
40	~~4371712~~		
	1487118	O-Ring	3
41	4321282	O-Ring	1
42	1487122	O-Ring	2
43	4712559	Seal	1
44	4618181	Label , A/C decal 1.3kg	1

©2026 HYSTER COMPANY

FOOTNOTES:

a → 12/2024

©2026 HYSTER COMPANY

NOTES

CAB HVAC SYSTEM (FIGURE 1-29)

2.1L (8/2022 →)

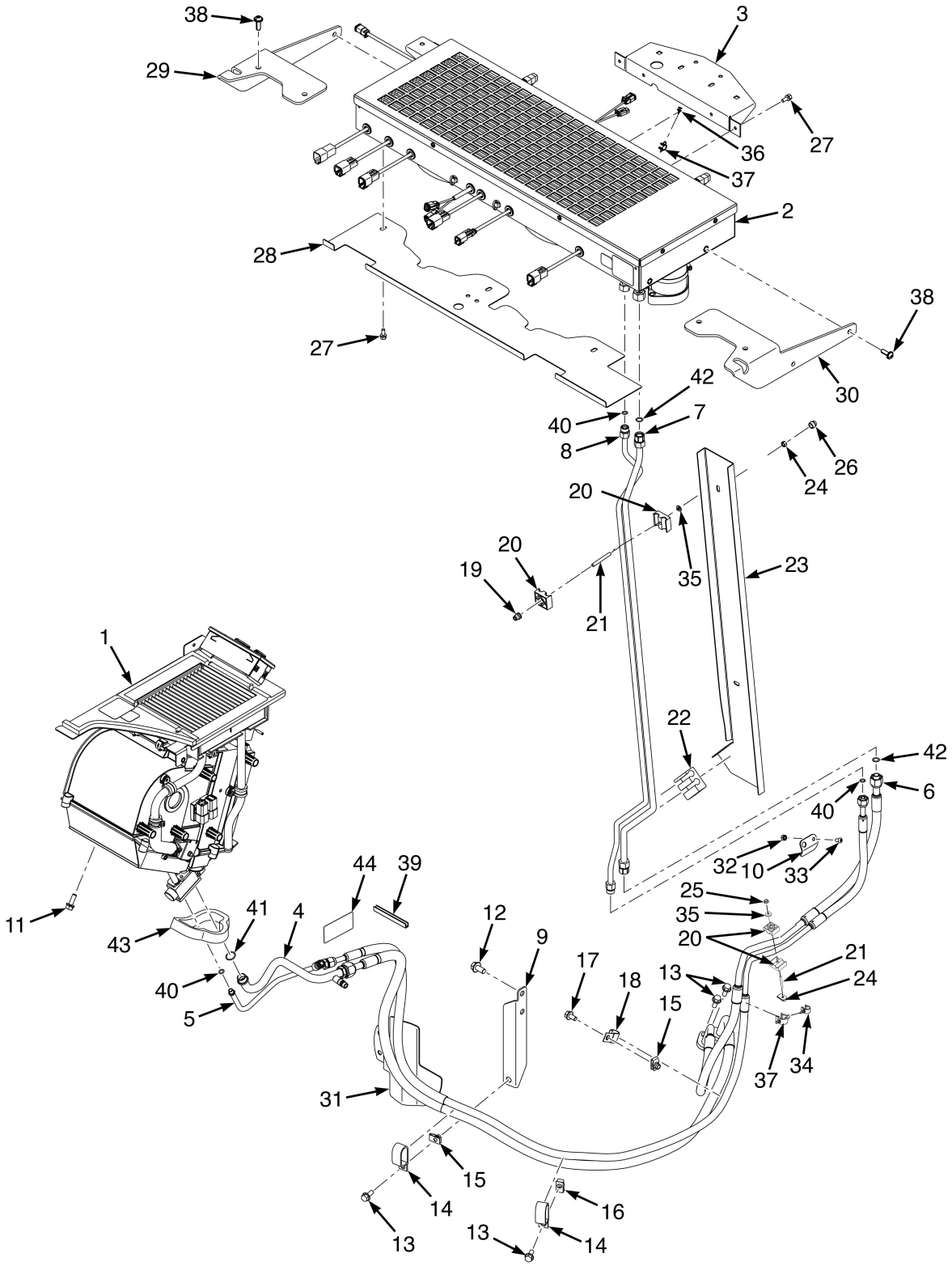

©2026 HYSTER COMPANY

CAB HVAC SYSTEM

2.1L (8/2022 →)

ITEM	PART NO.	DESCRIPTION	QTY
1	4708264	Kit-Heater And Airco (☞Figure 1-33)	1
1	4730523	Kit-Heater And Airco (Alternate Part) (☞Figure 1-35)	1
2	4676351	Condenser (☞Figure 1-44)	1
3	4708075	Bracket - Condenser, Rear Light	1
4	4708881	Hose Assy - #10 A/C Refrigerant	1
5	4708883	Tube Assy	1
6	4708882	Tube Assy	1
7	4691293	Tube Assy - #8 A/C Refrigerant	1
8	4691291	Tube Assy - #6 A/C Refrigerant	1
9	4268955	Bracket	1
10	4709493	Plate - HVAC A/C Hose	1
11	1583611	Capscrew	3
12	1527883	Capscrew	2
13	1527880	Capscrew	4
14	251994	Clamp	2
15	1480237	Nut (Foldover)	2
16	1398062	Nut (Fold Over)	1
17	~~4109993~~		
	1527879	Capscrew	1
18	325804	Clamp	1
19	1531558	Insert	2
20	4700802	Clamp (2 halves)	3
21	4244205	Stud	3
22	4709492	Foam - Seal, Rear A/C Tube	1
23	4243992	Heat Shield	1
24	1566420	Nut (Foldover)	2
25	1586429	Metric Nut	2
26	1699334	Cap	2
27	4309803	Screw	6
28	4700976	Plate	1
29	4715158	Bracket Wldmt (Assembly) (RH)	1
30	4715157	Bracket Wldmt (Assembly) (LH)	1
31	**a** 4291709	Heat Shield - DPF	1
32	302399	Nut	1
33	4273298	Screw	1
34	1573549	Clamp (Swivel)	1
35	4227412	Washer	3
36	4083363	Clamp	1
37	1542439	Clamp (Swivel)	1
38	4273869	Screw	8
39	4223240	Trim	1
40	~~4371712~~		
	1487118	O-Ring	3
41	4321282	O-Ring	1
42	1487122	O-Ring	2
43	4712559	Seal	1
44	4618181	Label , A/C decal 1.3kg	1

©2026 HYSTER COMPANY

FOOTNOTES:

a → 12/2024

©2026 HYSTER COMPANY

NOTES

CAB HVAC SYSTEM (FIGURE 1-30)

2.2L (→ 8/2022)

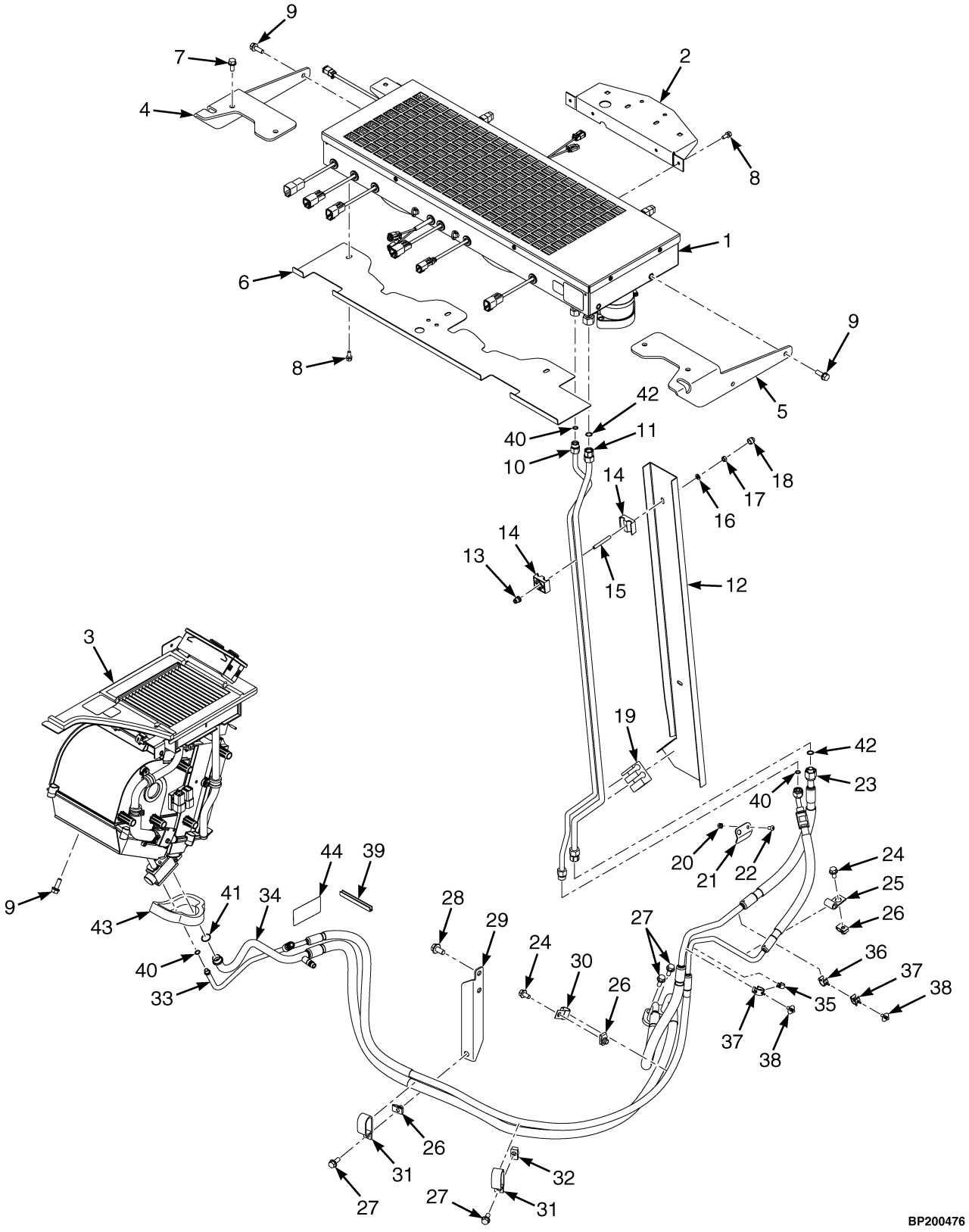

©2026 HYSTER COMPANY

CAB HVAC SYSTEM

2.2L (→ 8/2022)

ITEM	PART NO.	DESCRIPTION	QTY
1	4676351	Condenser	1
2	4708075	Bracket - Condenser, Rear Light	1
3	4708264	Kit-Heater And Airco	1
3	4730523	Kit-Heater And Airco (Alternate Part) (☞Figure 1-35)	1
4	4715158	Bracket Wldmt (Assembly) (RH)	1
5	4715157	Bracket Wldmt (Assembly) (LH)	1
6	4700976	Plate	1
7	1608654	Capscrew	4
8	1693371	Capscrew	7
9	1583611	Capscrew	7
10	4691291	Tube Assy - #6 A/C Refrigerant	1
11	4691293	Tube Assy - #8 A/C Refrigerant	1
12	4243992	Heat Shield	1
13	1531558	Insert	2
14	4700802	Clamp (2 halves)	2
15	4244205	Stud	2
16	1506738	Washer	2
17	4043633	Nut	2
18	1699334	Cap	2
19	4709492	Foam - Seal, Rear A/C Tube	1
20	302399	Nut	1
21	4709493	Plate - HVAC A/C Hose	1
22	4273298	Screw	1
23	4708882	Tube Assy	1
24	~~4109993~~		
	1527879	Capscrew	2
25	154208	Clamp	1
26	1480237	Nut (Foldover)	3
27	1527880	Capscrew	4
28	1527883	Capscrew	2
29	4268955	Bracket	1
30	325804	Clamp	1
31	251994	Clamp	2
32	1398062	Nut (Fold Over)	1
33	4709404	Tube Assy	1
34	4708881	Hose Assy - #10 A/C Refrigerant	1
35	1573549	Clamp (Swivel)	1
36	1542439	Clamp (Swivel)	1
37	1502057	Clamp	2
38	1543842	Clamp (Base)	2
39	4223240	Trim	1
40	~~4371712~~		
	1487118	O-Ring	3
41	4321282	O-Ring	1
42	1487122	O-Ring	2
43	4712559	Seal	1
44	4618181	Label , A/C decal 1.3kg	1

©2026 HYSTER COMPANY

CAB HVAC SYSTEM (FIGURE 1-31)

2.2L (8/2022 →)

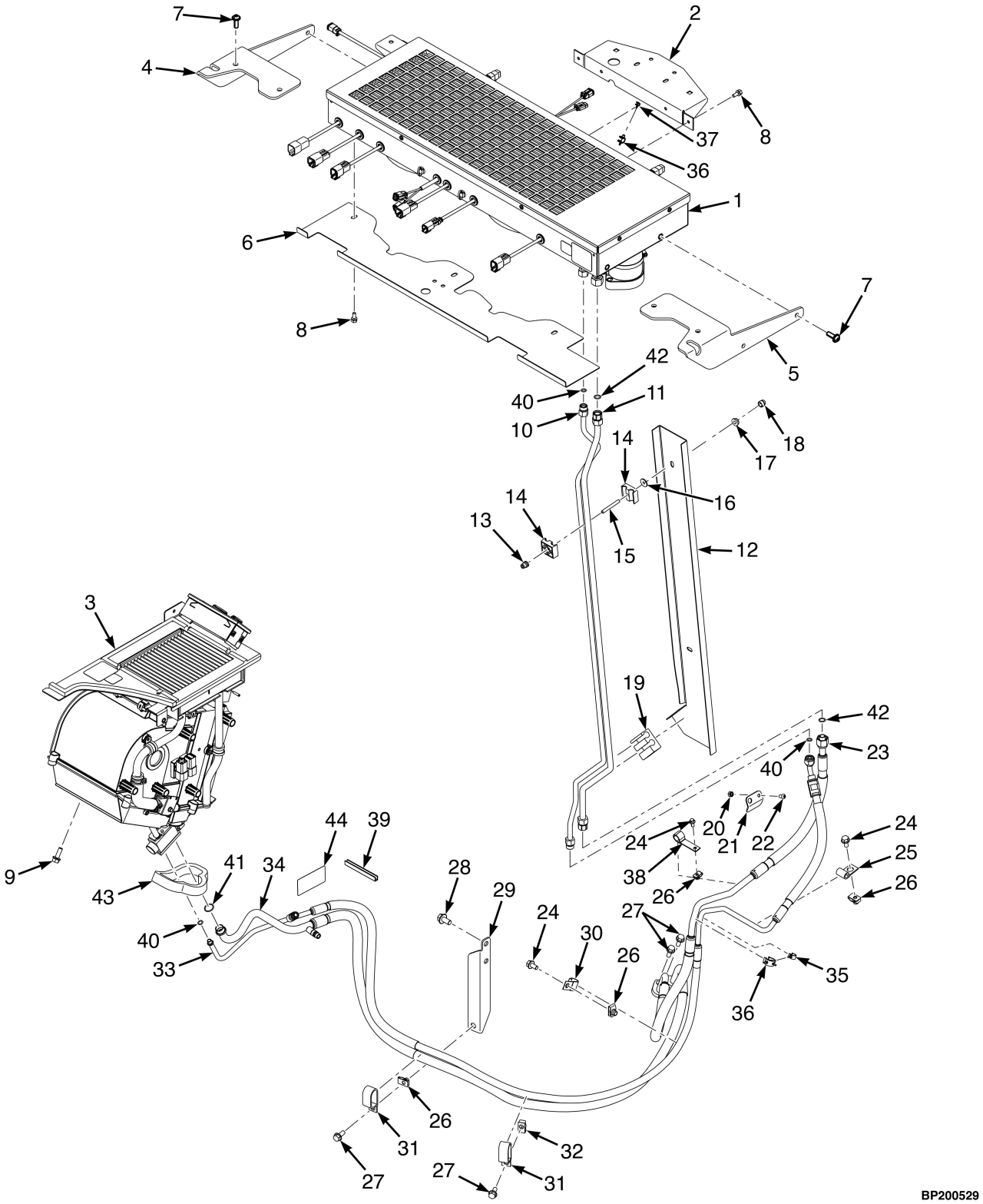

©2026 HYSTER COMPANY

CAB HVAC SYSTEM

2.2L (8/2022 →)

ITEM	PART NO.	DESCRIPTION	QTY
1	4676351	Condenser (☞Figure 1-44)	1
2	4708075	Bracket - Condenser, Rear Light	1
3	4708264	Kit-Heater And Airco	1
3	4730523	Kit-Heater And Airco (Alternate Part) (☞Figure 1-35)	1
4	4715158	Bracket Wldmt (Assembly) (RH)	1
5	4715157	Bracket Wldmt (Assembly) (LH)	1
6	4700976	Plate	1
7	4273869	Screw	8
8	1693371	Capscrew	7
9	1583611	Capscrew	3
10	4691291	Tube Assy - #6 A/C Refrigerant	1
11	4691293	Tube Assy - #8 A/C Refrigerant	1
12	4243992	Heat Shield	1
13	1531558	Insert	2
14	4700802	Clamp (2 halves)	2
15	4244205	Stud	2
16	4227412	Washer	2
17	4043633	Nut	2
18	1699334	Cap	2
19	4709492	Foam - Seal, Rear A/C Tube	1
20	302399	Nut	1
21	4709493	Plate - HVAC A/C Hose	1
22	4273298	Screw	1
23	4708882	Tube Assy	1
24	~~4109993~~		
	1527879	Capscrew	3
25	154208	Clamp	1
26	1480237	Nut (Foldover)	4
27	1527880	Capscrew	4
28	1527883	Capscrew	2
29	4268955	Bracket	1
30	325804	Clamp	1
31	251994	Clamp	2
32	1398062	Nut (Fold Over)	1
33	4709404	Tube Assy	1
34	4708881	Hose Assy - #10 A/C Refrigerant	1
35	1573549	Clamp (Swivel)	1
36	1542439	Clamp (Swivel)	1
37	4083363	Clamp	1
38	1474893	Clamp	1
39	4223240	Trim	1
40	~~4371712~~		
	1487118	O-Ring	3
41	4321282	O-Ring	1
42	1487122	O-Ring	2
43	4712559	Seal	1
44	4618181	Label , A/C decal 1.3kg	1

©2026 HYSTER COMPANY

CAB HVAC SYSTEM (FIGURE 1-32)
3.0L AND 3.3L

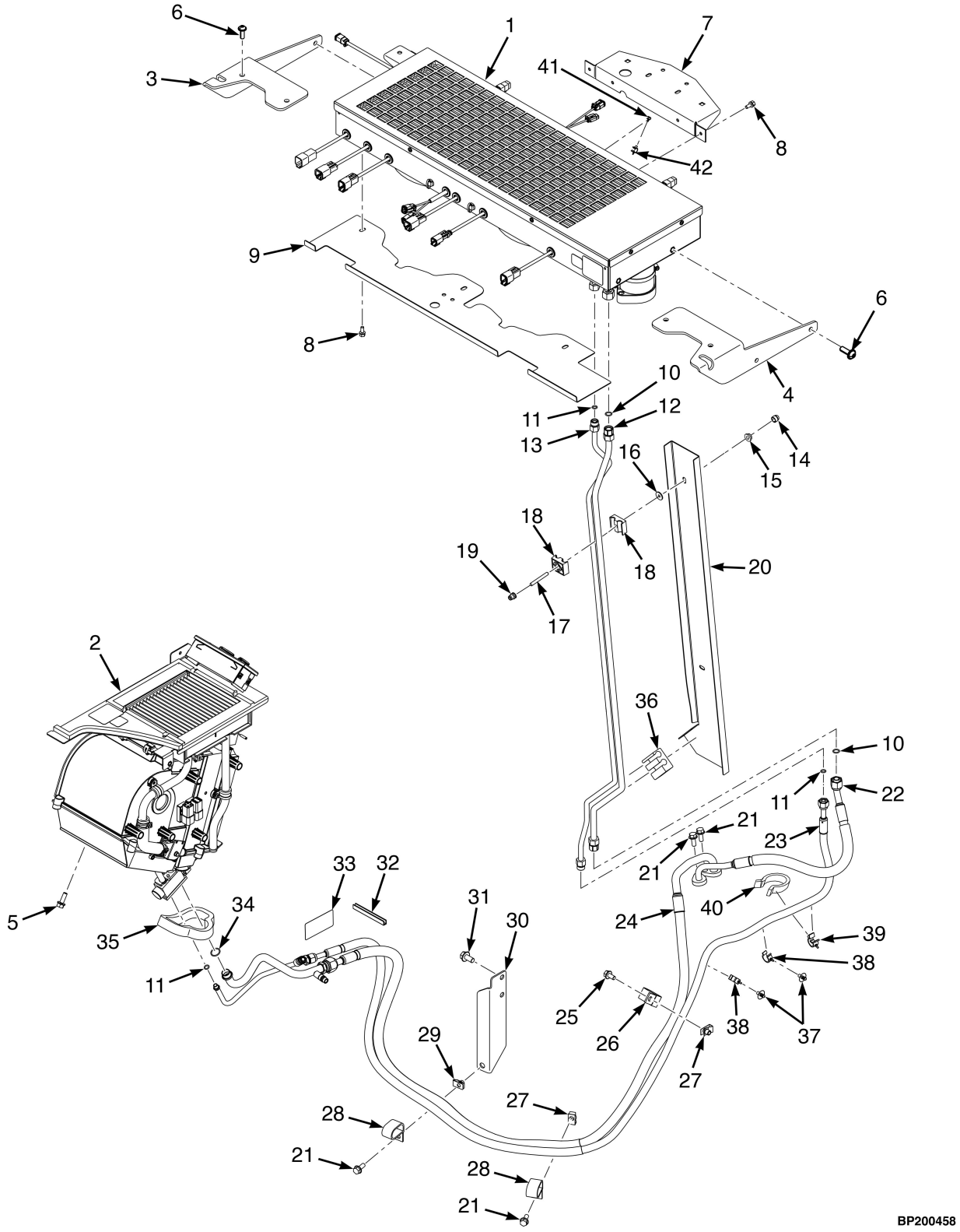

©2026 HYSTER COMPANY

CAB HVAC SYSTEM

3.0L AND 3.3L

ITEM	PART NO.	DESCRIPTION	QTY
1	4676351	Condenser (☞Figure 1-44)	1
2	4708264	Kit-Heater And Airco (☞Figure 1-40)	1
2	4730523	Kit-Heater And Airco (Alternate Part) (☞Figure 1-35)	1
3	4715158	Bracket Wldmt (Assembly) (RH)	1
4	4715157	Bracket Wldmt (Assembly) (LH)	1
5	1583611	Capscrew	3
6	4273869	Screw	8
7	4708075	Bracket - Condenser, Rear Light	1
8	4309803	Screw	7
9	4700976	Plate	1
10	1487122	O-Ring	2
11	~~4371712~~		
	1487118	O-Ring	3
12	4691293	Tube Assy - #8 A/C Refrigerant	1
13	4691291	Tube Assy - #6 A/C Refrigerant	1
14	1699334	Cap	2
15	1586429	Metric Nut	2
16	4227412	Washer	2
17	4244205	Stud	2
18	4700802	Clamp (2 halves)	2
19	1531558	Insert	2
20	4243992	Heat Shield	1
21	1527880	Capscrew	4
22	4708869	Hose Assy	1
23	4708868	Hose Assy	1
24	4708867	Hose Assy (#10)	1
25	~~4109993~~		
	1527879	Capscrew	1
26	4241995	Clamp	1
27	1398062	Nut (Fold Over)	2
28	1326652	Clamp	2
29	1480237	Nut (Foldover)	1
30	4291615	Bracket	1
31	1527883	Capscrew	2
32	4223240	Trim	1
33	4618181	Label , A/C decal 1.3kg	1
34	4321282	O-Ring	1
35	4712559	Seal	1
36	4709492	Foam - Seal, Rear A/C Tube	1
37	1543842	Clamp (Base)	2
38	1542442	Clamp (Swivel)	2
39	4078947	Clamp (Swivel)	1
40	4166547	Clamp (Swivel)	1
41	4083363	Clamp	1
42	1542439	Clamp (Swivel)	1

CAB HEATER ASSEMBLY (FIGURE 1-33)

(→ 4/2023)

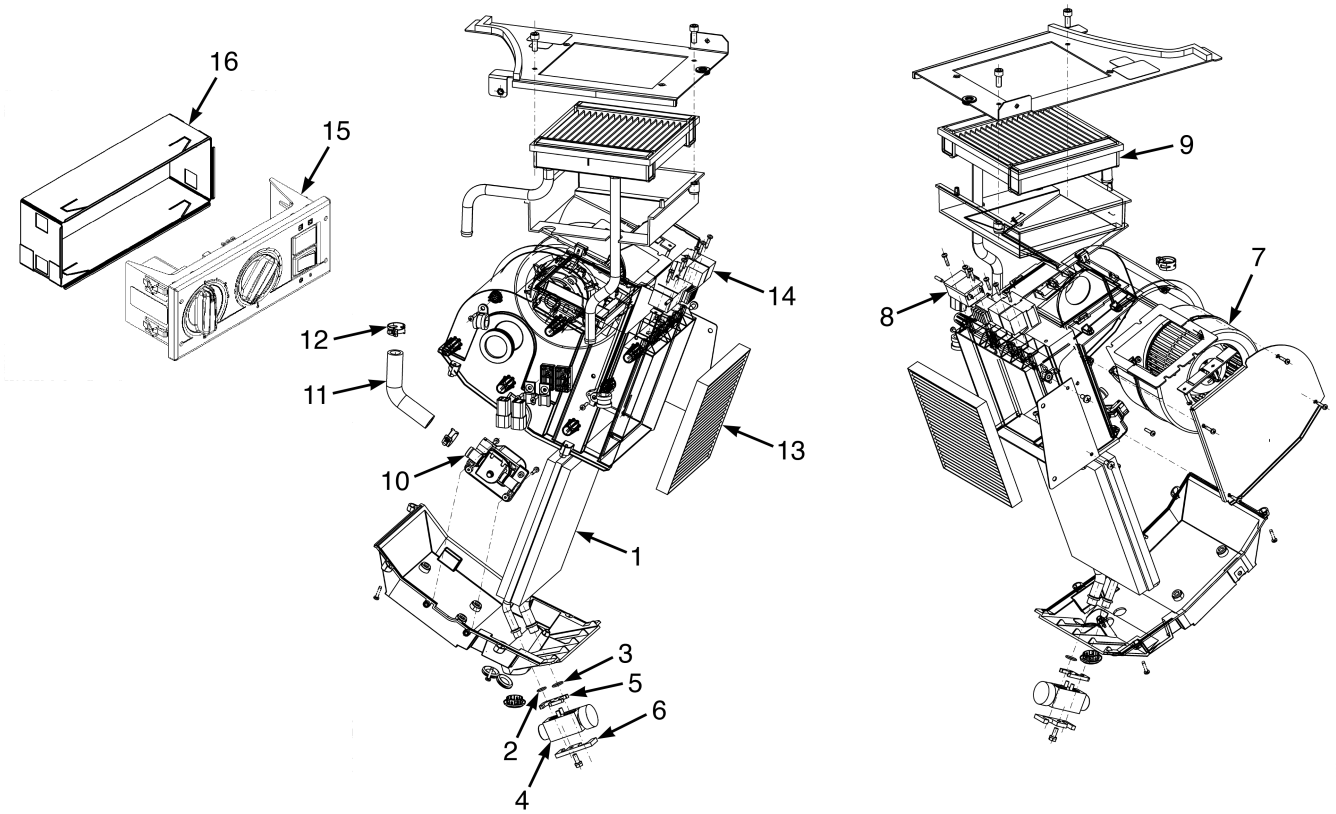

BP260285

©2026 HYSTER COMPANY

CAB HEATER ASSEMBLY

(→ 4/2023)

KEY:
A: Heater w/ A/C
B: Heater Only

ITEM	PART NO.	DESCRIPTION	QTY A	QTY B
	4708264	Kit-Heater And Airco	1	..
	4707864	Kit-Heater	..	1
1	4313418	Evaporator	1	..
2	1487122	O-Ring	1	..
3	1487125	O-Ring	1	..
4	4277145	Valve , Expansion	1	..
5	4277146	Bracket	1	..
6	4277147	Bracket	1	..
7	4313412	Fan (Radial)	1	1
8	1560538	Thermostat	1	..
9	4313413	Heater Core	1	1
10	4313414	Valve	1	1
11	4313415	Elbow	1	1
12	4313416	Clamp	1	1
13	4313417	Filter	1	..
14	4313419	Relay	1	..
15	4325520	Control Panel	1	1
16	4325521	Bracket (Slide in frame)	1	1

©2026 HYSTER COMPANY

CAB HEATER ASSEMBLY (FIGURE 1-34)

(4/2023 →)

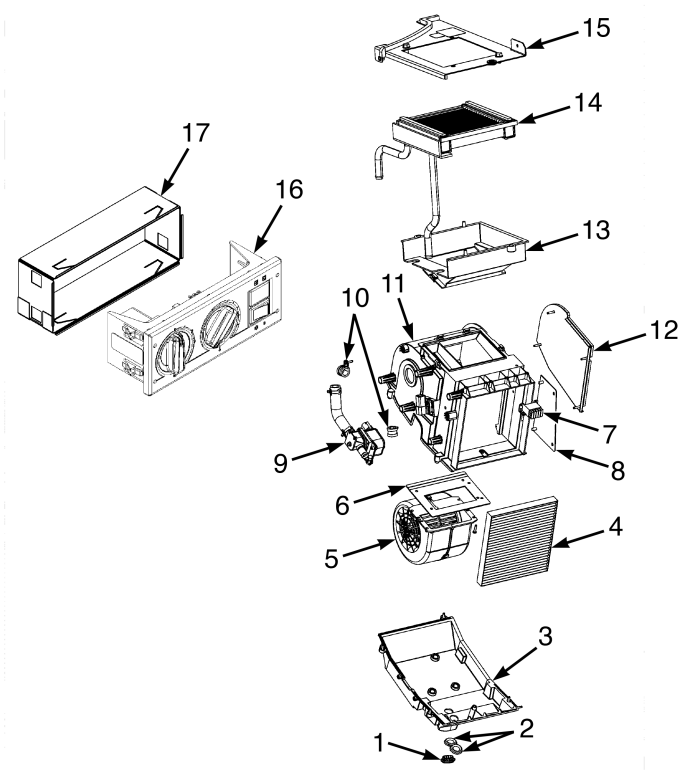

ITEM	PART NO.	DESCRIPTION	QTY
	4730522	Kit-Heater (Assembly)	1
1	4390296	Drain Plug (w/ gasket)	1
2	4390297	Grommet	2
3	4390298	Housing (Bottom)	1
4	4313417	Filter	1
5	4390299	Blower	1
6	4390300	Mounting Plate	1
7	4390301	Relay	1
8	4390303	Plate (Retaining)	1
9	4313414	Valve	1
10	4390302	Clamp	2
11	4390304	Housing (Main)	1
12	4390305	Cover (Service)	1
13	~~4398149~~		
	4390306	Housing (Heater Core)	1
14	4313413	Heater Core	1
15	4390308	Cover (Heater Core)	1
16	4325520	Control Panel	1
17	4325521	Bracket (Slide in frame)	1
	a 4390309	Wire Harness	1

FOOTNOTES:

a Not Illustrated

©2026 HYSTER COMPANY

CAB HVAC ASSEMBLY (FIGURE 1-35)

(4/2023 →)

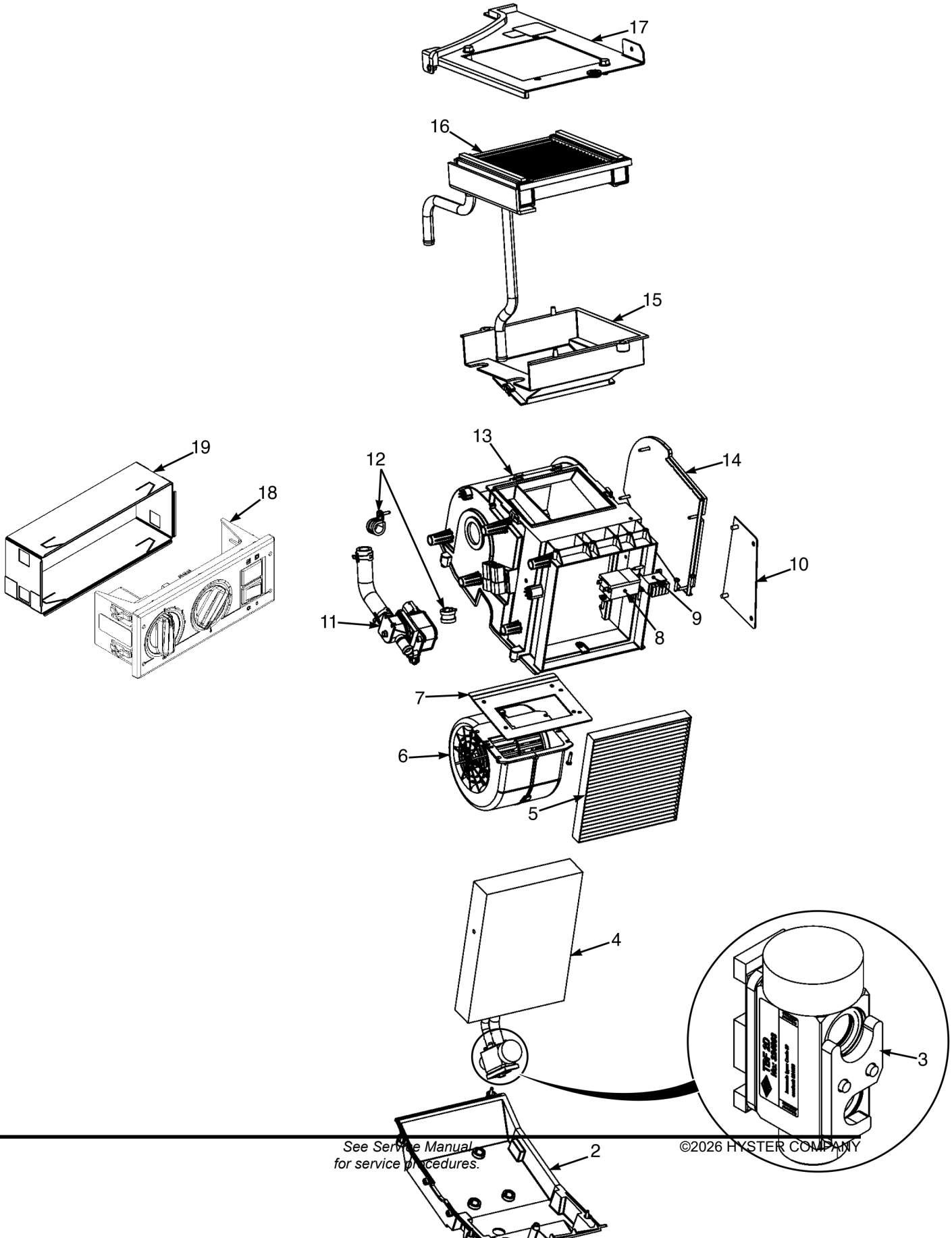

©2026 HYSTER COMPANY

ITEM	PART NO.	DESCRIPTION	QTY
	4730523	Kit-Heater And Airco	1
1	4390296	Drain Plug (w/ gasket)	1
2	4390298	Housing (Bottom)	1
3	4398148	Kit-Service	1
4	4313418	Evaporator	1
5	4313417	Filter	1
6	4390299	Blower	1
7	4390300	Mounting Plate	1
8	4373180	Thermostat	1
9	4390301	Relay	1
10	4390303	Plate (Retaining)	1
11	4313414	Valve	1
12	4390302	Clamp	2
13	4390304	Housing (Main)	1
14	4390305	Cover (Service)	1
15	~~4398149~~		
	4390306	Housing (Heater Core)	1
16	4313413	Heater Core	1
17	4390308	Cover (Heater Core)	1
18	4325523	Control Panel	1
19	4325521	Bracket (Slide in frame)	1
	a 4398150	Wire Harness (HVAC Assembly)	1

FOOTNOTES:

a Not Illustrated

CAB HEATER (FIGURE 1-36)
WITH 2.1L ENGINE HOSES (→ 1/2022)

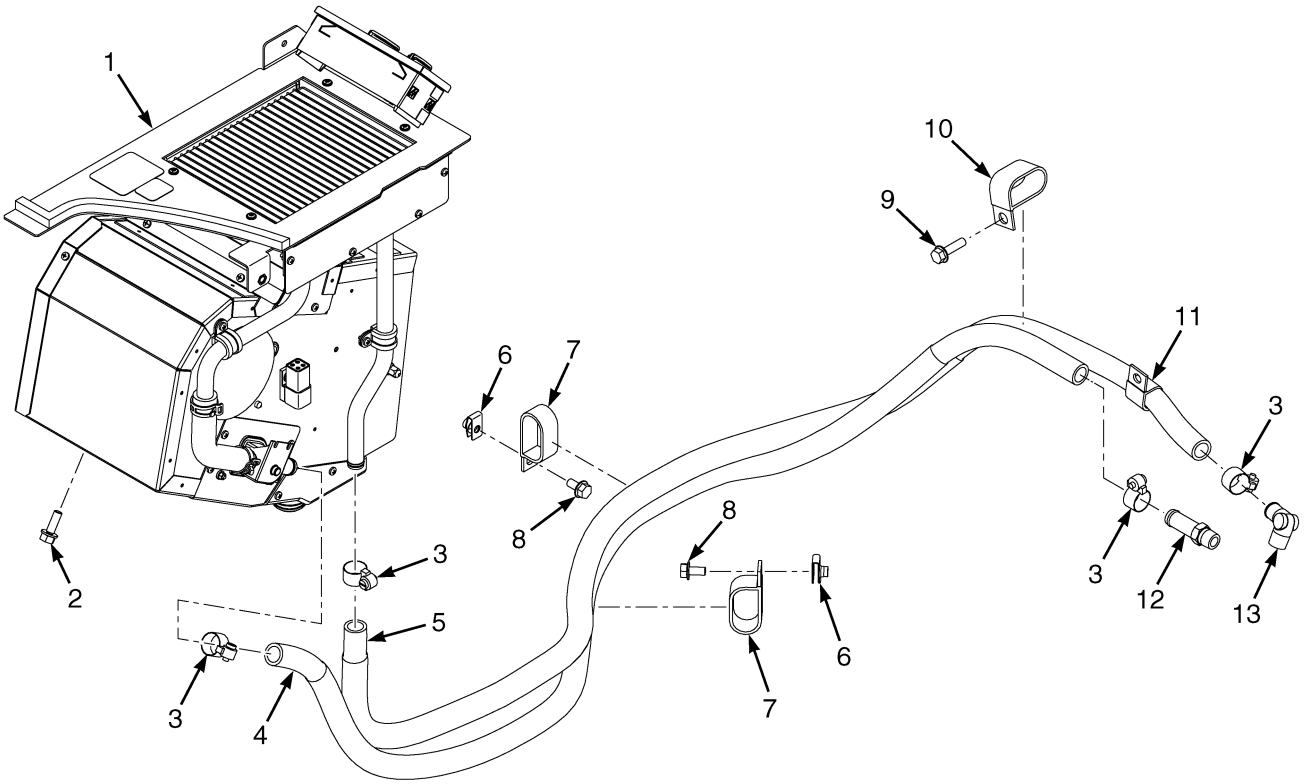

ITEM	PART NO.	DESCRIPTION	QTY
1	4707864	Kit-Heater (w/o Air Conditioning)	1
1	4730522	Kit-Heater (Alternate Part) (☞Figure 1-34)	1
1	4708264	Kit-Heater And Airco	1
1	4730523	Kit-Heater And Airco (Alternate Part) (☞Figure 1-35)	1
2	1583611	Capscrew	3
3	130845	Clamp	4
4	4702070	Hose (Cab Heater Supply)	1
5	4702073	Hose (Cab Heater Return)	1
6	1480237	Nut (Foldover)	2
7	212786	Clamp , Insulated	2
8	~~4109993~~		
	1527879	Capscrew	3
9	1527881	Capscrew	1
10	1326652	Clamp	1
11	153069	Clamp	1
12	138710	Fitting	1
13	4268731	Elbow	1

©2026 HYSTER COMPANY

CAB HEATER (FIGURE 1-37)
WITH 2.1L ENGINE HOSES (1/2022 →)

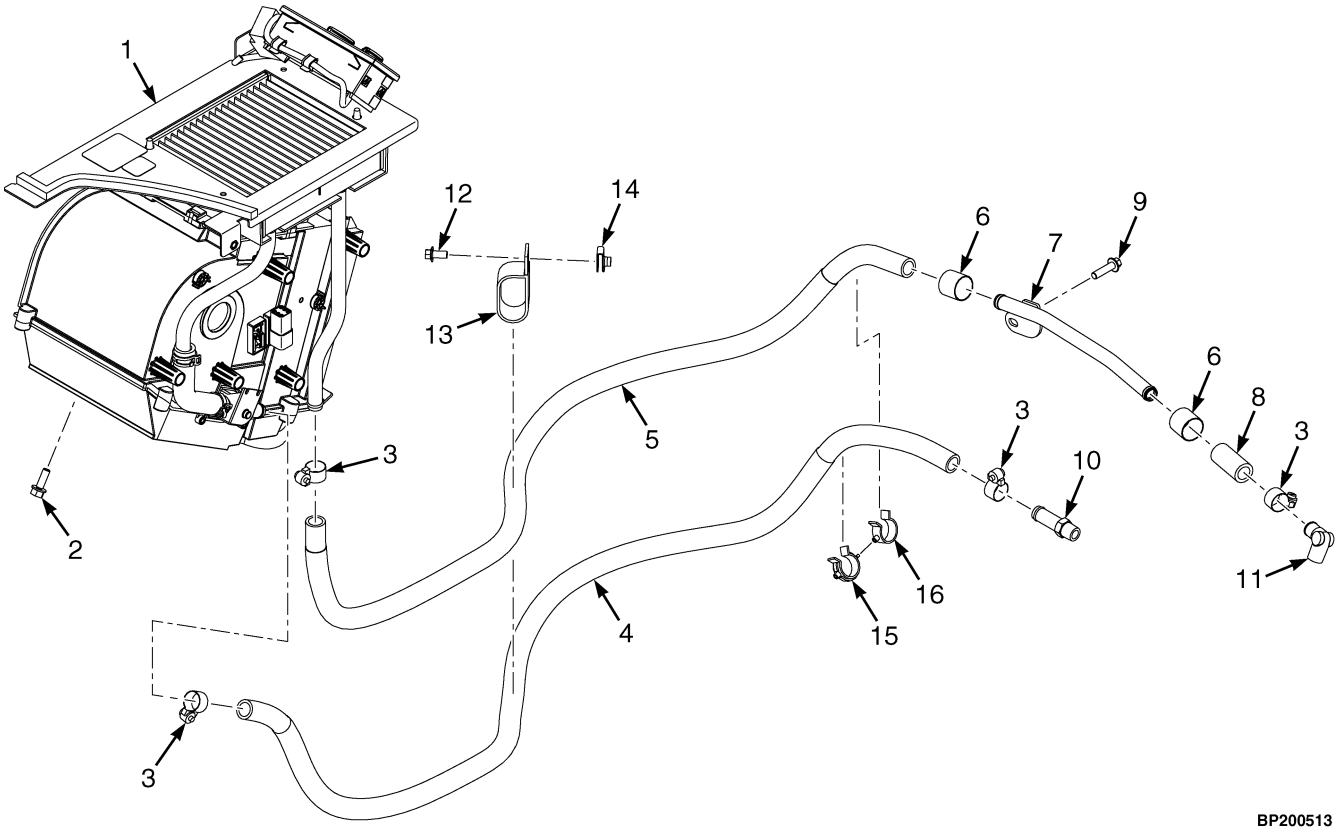

ITEM	PART NO.	DESCRIPTION	QTY
1	4707864	Kit-Heater (w/o Air Conditioning)	1
1	4730522	Kit-Heater (Alternate Part) (☞Figure 1-34)	1
1	4708264	Kit-Heater And Airco	1
1	4730523	Kit-Heater And Airco (Alternate Part) (☞Figure 1-35)	1
2	1583611	Capscrew	3
3	130845	Clamp	4
4	4702070	Hose (Cab Heater Supply)	1
5	4718058	Hose (Cab Heater Return)	1
5	4718624	Hose	1
6	. . . . .	Clamp	2
7	4718541	Tube (Cab Heater Return)	1
8	4615670	Hose (Coolant)	1
9	1527881	Capscrew	1
10	138710	Fitting	1
11	4268731	Elbow	1
12	~~4109993~~		
	1527879	Capscrew	1
13	212786	Clamp , Insulated	2
14	1480237	Nut (Foldover)	2
15	1569465	Clamp (Swivel)	1
16	1542436	Clamp (Swivel)	1

CAB HEATER (FIGURE 1-38)
WITH 2.2L ENGINE HOSES (→ 6/2022)

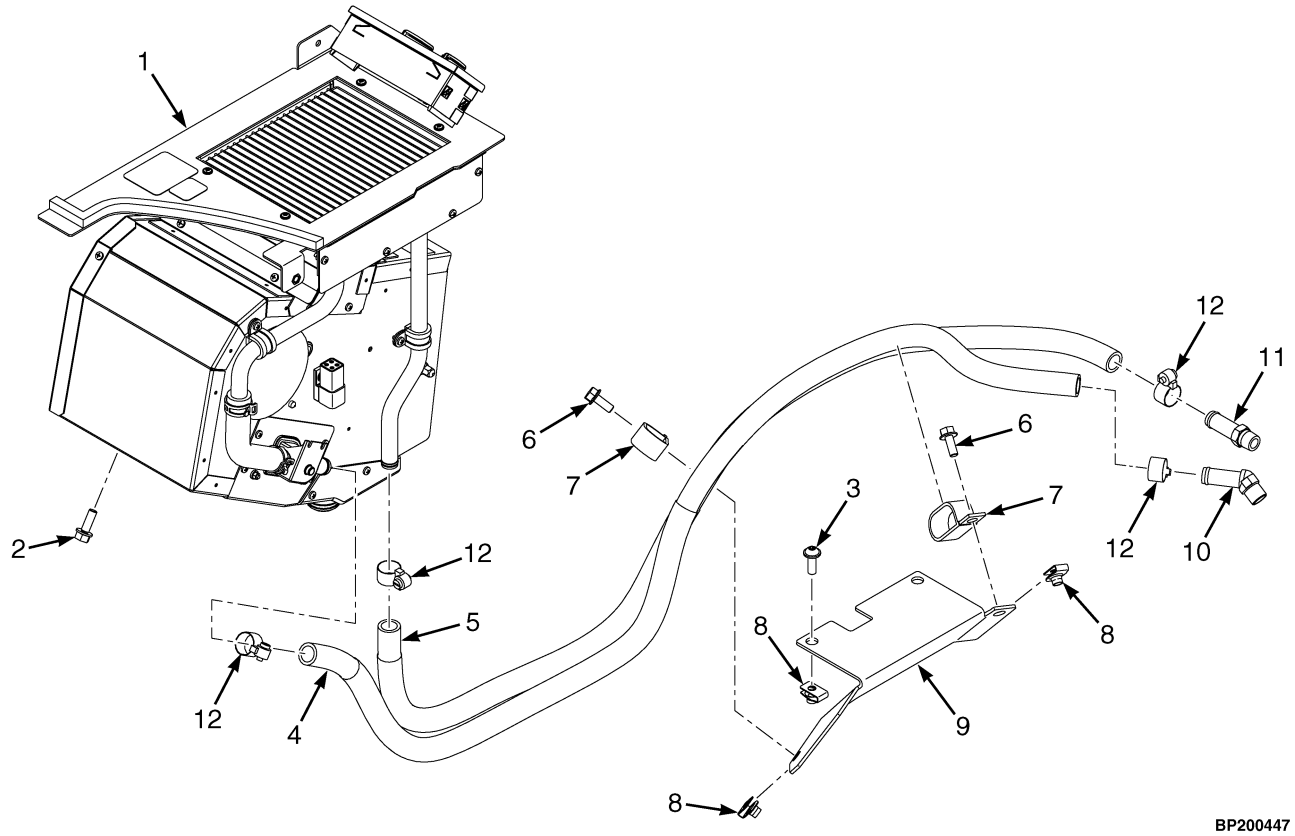

ITEM	PART NO.	DESCRIPTION	QTY
1	4707864	Kit-Heater (w/o Air Conditioning)	1
1	4730522	Kit-Heater (Alternate Part) (☞Figure 1-34)	1
1	4708264	Kit-Heater And Airco (☞Figure 1-30)	1
1	4730523	Kit-Heater And Airco (Alternate Part) (☞Figure 1-35)	1
2	1583611	Capscrew	3
3	4273869	Screw	2
4	4702076	Hose (Cab Heater Supply)	1
5	4702075	Hose (Cab Heater Return)	1
6	1527880	Capscrew	2
7	255578	Clamp	2
8	1480237	Nut (Foldover)	4
9	4294713	Bracket	1
10	1336135	Fitting	1
11	138710	Fitting	1
12	130845	Clamp	4

©2026 HYSTER COMPANY

NOTES

CAB HEATER (FIGURE 1-39)
WITH 2.2L ENGINE HOSES (6/2022 →)

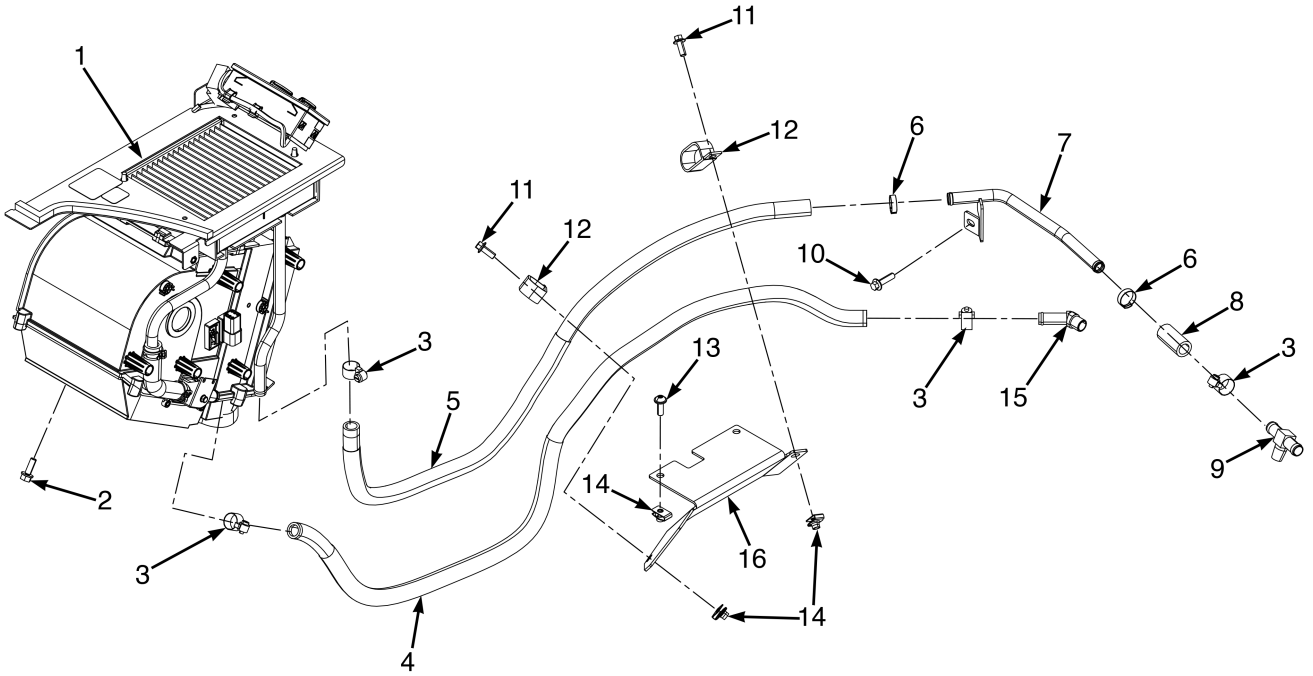

©2026 HYSTER COMPANY

CAB HEATER

WITH 2.2L ENGINE HOSES (6/2022 →)

ITEM	PART NO.	DESCRIPTION	QTY
1	4707864	Kit-Heater (w/o Air Conditioning)	1
1	4730522	Kit-Heater (Alternate Part) (☞Figure 1-34)	1
1	4708264	Kit-Heater And Airco	1
1	4730523	Kit-Heater And Airco (Alternate Part) (☞Figure 1-35)	1
2	1583611	Capscrew	1
3	130845	Clamp	4
4	4702076	Hose (Cab Heater Supply)	1
5	4723174	Hose (Coolant)	1
5	4722799	Hose	1
6	. . . . .	Clamp	2
7	4723173	Tube - w/ wlmnt	1
8	4615670	Hose	1
9	4350109	T-Fitting (Hose Nip)	1
10	1527881	Capscrew	1
11	1527880	Capscrew	2
12	255578	Clamp	2
13	4273869	Screw	2
14	1480237	Nut (Foldover)	4
15	1336135	Fitting	1
16	4294713	Bracket	1

©2026 HYSTER COMPANY

CAB HEATER (FIGURE 1-40)
WITH 3.0 AND 3.3L ENGINE HOSES

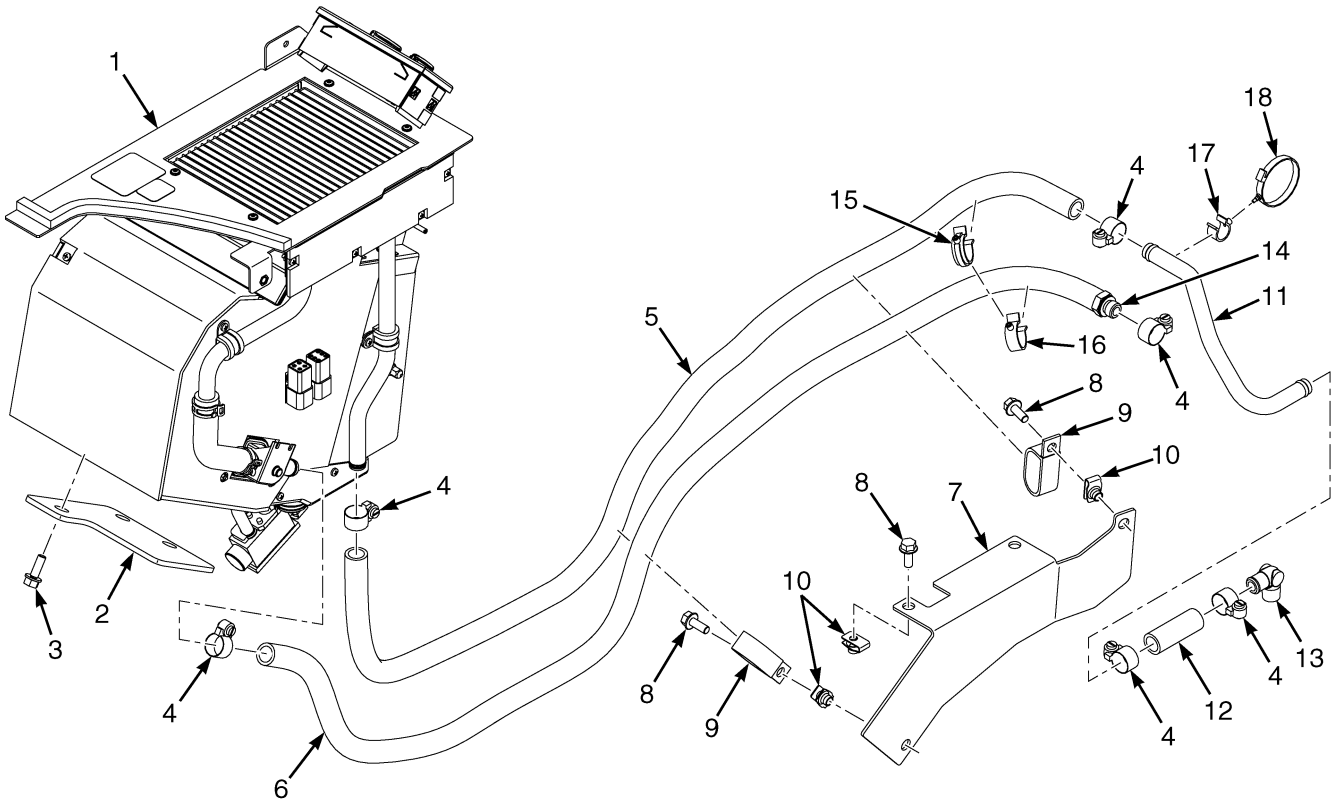

ITEM	PART NO.	DESCRIPTION	QTY
1	4707864	Kit-Heater (w/o Air Conditioning)	1
1	4730522	Kit-Heater (Alternate Part) (☞Figure 1-34)	1
1	4708264	Kit-Heater And Airco	1
1	4730523	Kit-Heater And Airco (Alternate Part) (☞Figure 1-35)	1
2	4700000	Plate	1
3	1583611	Capscrew	3
4	130845	Clamp	6
4	166857	Clamp (Alternate Part)	6
5	4701322	Hose (Cab Heater)	1
6	4701323	Hose (Cab Heater)	1
7	4292327	Bracket	1
8	1527880	Capscrew	4
9	251994	Clamp	2
10	1480237	Nut (Foldover)	4
11	4701825	Tube (Heater Supply)	1
12	4701824	Hose (Cab Heater)	1
13	4268731	Elbow	1
14	4164225	Fitting	1
15	1569465	Clamp (Swivel)	1
16	1542436	Clamp (Swivel)	1
16	1502056	Clamp (Swivel) (Alternate Part)	1
17	1606544	Clamp (Swivel)	1
18	1502061	Clamp (Swivel)	1

©2026 HYSTER COMPANY

ITEM	PART NO.	DESCRIPTION	QTY
18	4166547	Clamp (Swivel) (Alternate Part)	1

DASH PANEL (FIGURE 1-41)

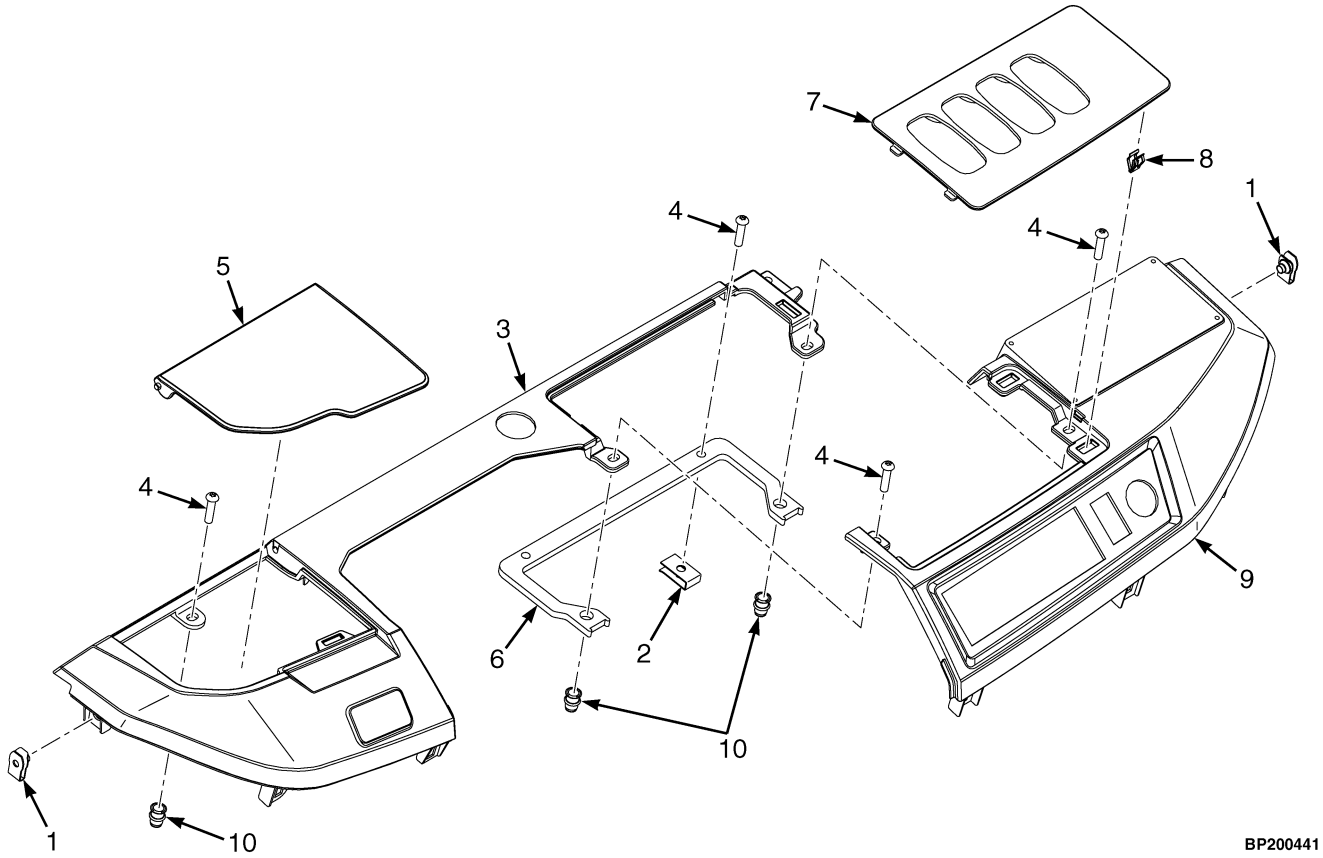

ITEM	PART NO.	DESCRIPTION	QTY
1	1566420	Nut (Foldover)	2
2	1350215	Nut (Foldover)	2
3	4699632	Dash Panel - LH w/ Manual Parking Brake	1
3	4722070	Dash Panel - LH w/ Manual Parking Brake (Alternate Part)	1
3	4699636	Dash Panel - LH w/ E-Parking Brake	1
3	4722069	Dash Panel - LH w/ E-Parking Brake (Alternate Part)	1
4	4242165	Screw	6
4	4196032	Screw (Alternate Part)	8
5	4693595	Cover - Service Access	1
6	4277195	Plate - Dash Support	1
7	4693855	Dash Panel - M-Hyd Tray	1
7	4693594	Dash Panel - Utility Tray	1
8	2065667	Clip	3
9	4695200	Dash Panel (RH)	1
9	4722060	Dash Panel (RH) (Alternate Part)	1
10	1531001	Insert	4
10	1614087	Insert (Optional)	4

©2026 HYSTER COMPANY

NOTES

HOOD AND ATTACHING PARTS (FIGURE 1-42)

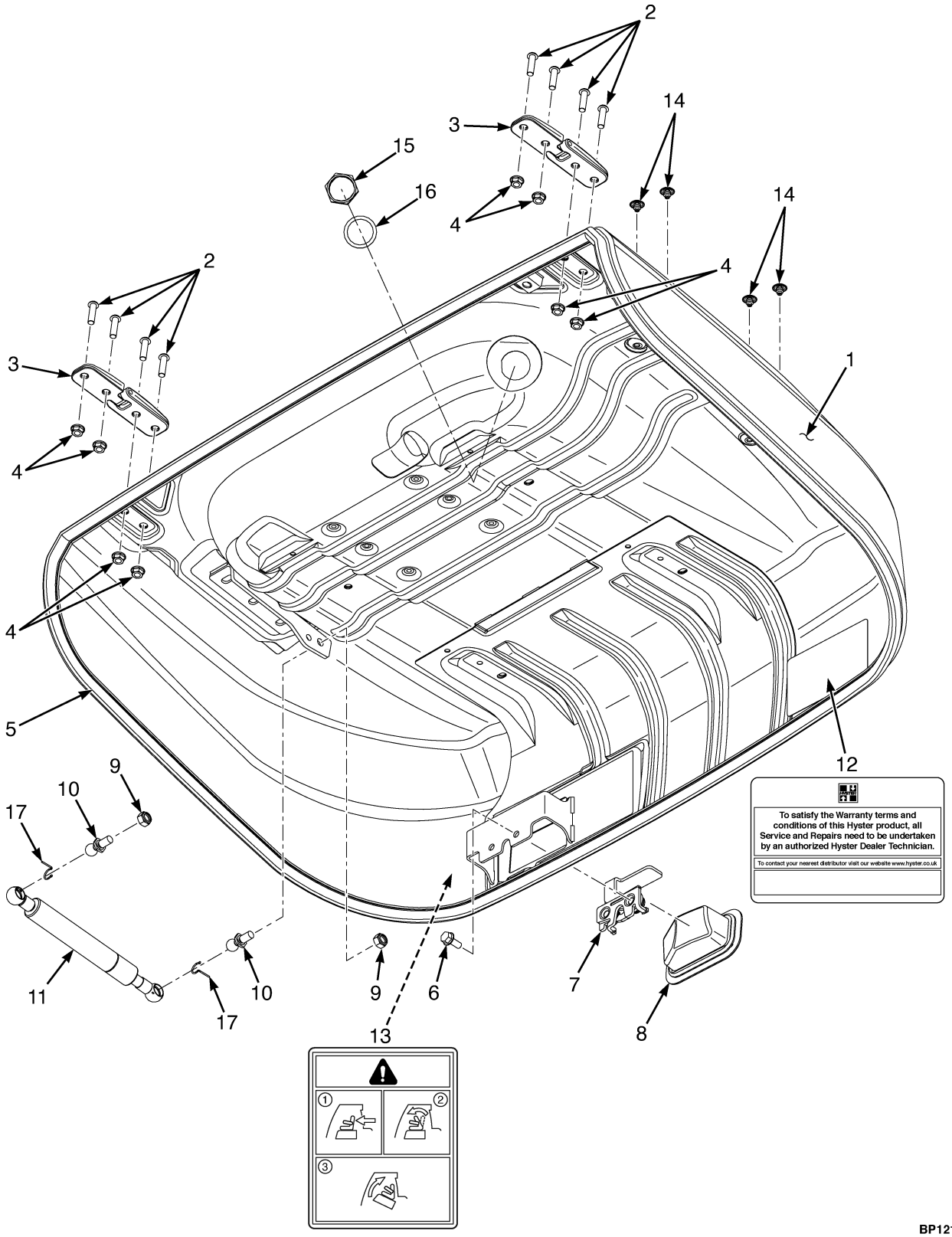

©2026 HYSTER COMPANY

HOOD AND ATTACHING PARTS

ITEM	PART NO.	DESCRIPTION	QTY
1	**d** 4307111	Hood - Standard	1
1	**e** 4389244	Hood - Standard	1
1	**d** 4307116	Hood - Vented	1
1	**e** 4389249	Hood - Vented	1
2	4280111	Screw	8
3	4280559	Hinge	2
3	304510	Dowel	1
4	~~1382472~~		
	1502543	Nut	8
5	4303979	Trim Seal	1
6	1527880	Capscrew	2
7	4686601	Latch	1
8	4707059	Boot	1
9	**c** 302400	Nut	2
9	**b** 302401	Locknut	2
10	**c** 1563369	Ball Stud	2
10	**b** 4020999	Ball Stud	2
11	**c** 4293256	Gas Spring	1
11	**b** 4293255	Gas Spring	1
12	1606674	Label (Warranty)	1
13	**a** 4611138	Label - Manual Levers Caution	1
14	1698799	Plug (Yellow) (0.26 in)	4
15	4693546	Nut (Seat Wire Harness)	1
16	4144310	Lockwasher (Seat Wire Harness)	1
17	1677115	Clip	2

FOOTNOTES:

a Full Suspension with manual levers.
b Seat - Full Suspension and Semi Suspension.
c Seat - Non Suspension
d → 5/2024
e 5/2024 →

AIR CONDITIONER COMPRESSOR (FIGURE 1-43)

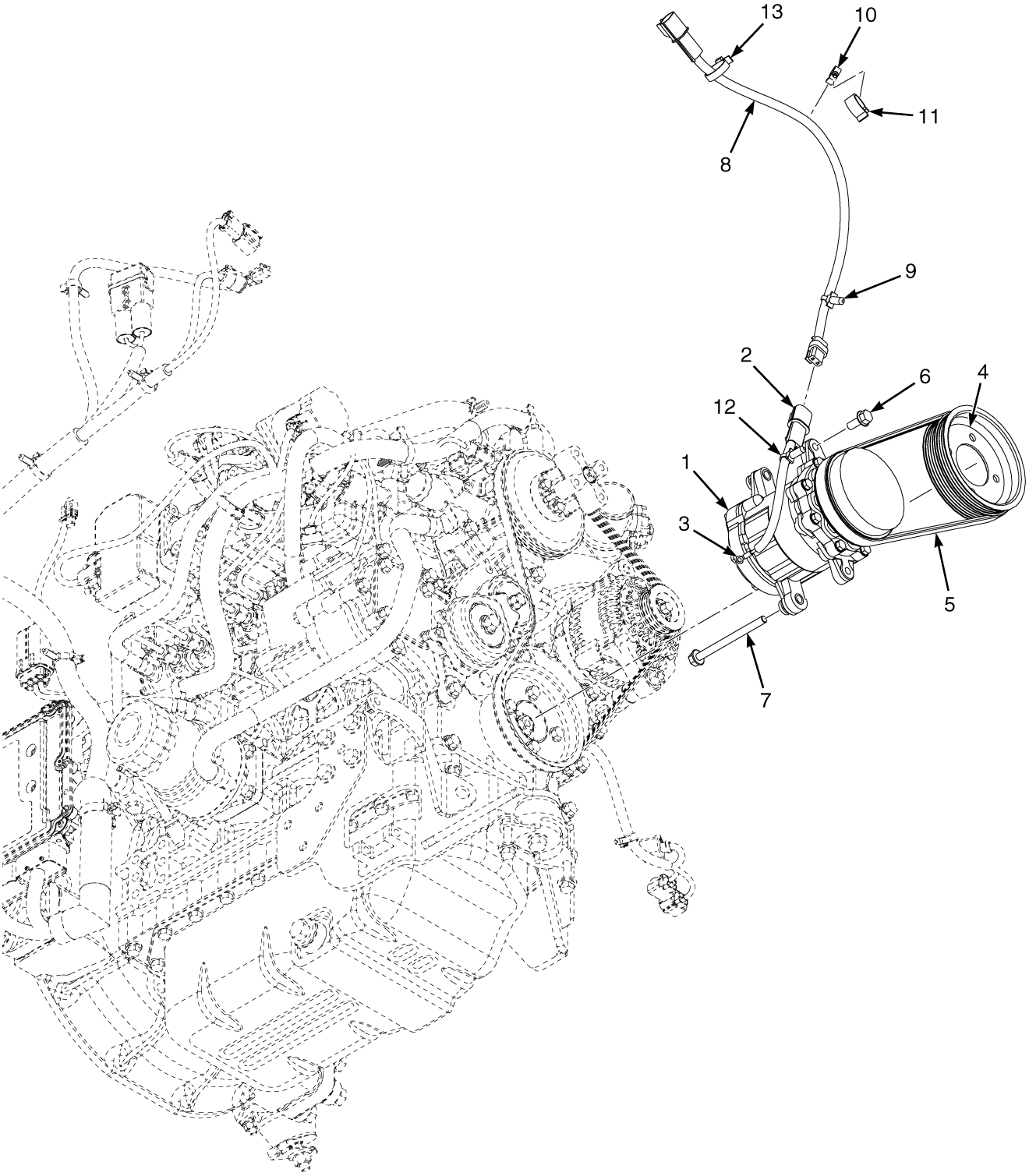

©2026 HYSTER COMPANY

AIR CONDITIONER COMPRESSOR

ITEM	PART NO.	DESCRIPTION	QTY
1	4690041	Compressor	1
2	. . . . .	Connector Assembly	1
2	1329150	Connector	1
2	1329151	Secondary Lock	1
2	1329149	Terminal	2
2	1329147	Seal	2
3	1582218	E-Ring	1
4	4267033	Crankshaft Pulley	1
5	4690304	Belt	1
6	1527880	Capscrew	1
7	1617601	Bolt	1
8	4701715	Wire Harness - Air Conditioner Compressor	1
9	4140361	Cable Clip	1
10	1644398	Clamp (Swivel)	1
11	1502053	Clamp (Swivel)	1
12	4140361	Cable Clip	1
13	129563	Strap Clamp	1

©2026 HYSTER COMPANY

CONDENSER ASSEMBLY (FIGURE 1-44)

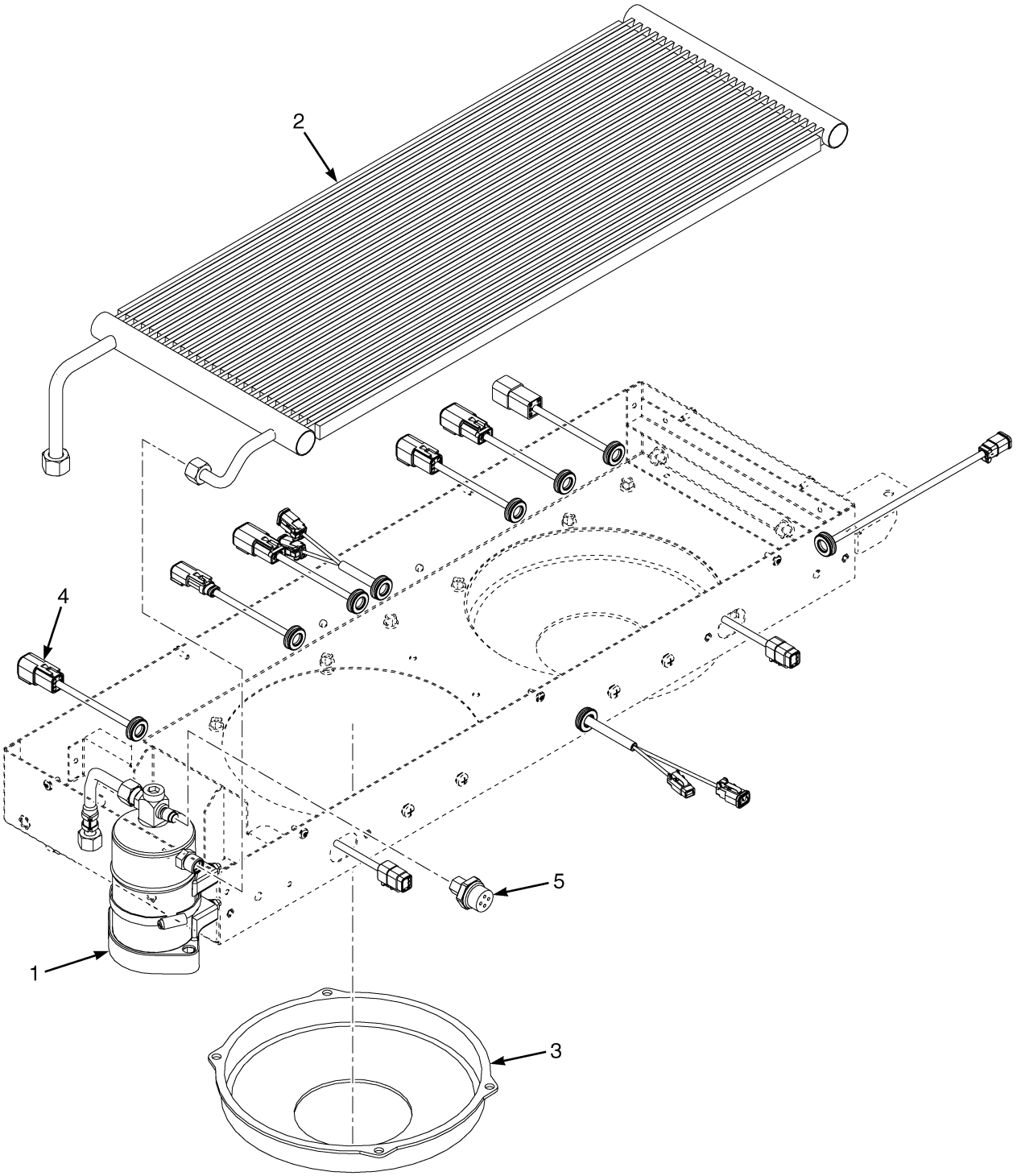

BP200437

©2026 HYSTER COMPANY

CONDENSER ASSEMBLY

ITEM	PART NO.	DESCRIPTION	QTY
	4676351	Condenser	1
1	1538217	Air Dryer	1
2	4311795	Condenser	1
3	4311796	Fan (12V)	1
4	4311797	Wire Harness - Condenser	1
5	4276865	Pressure Switch	1

©2026 HYSTER COMPANY

COVERS (FIGURE 1-45)
OPERATOR COMPARTMENT — WITHOUT HVAC

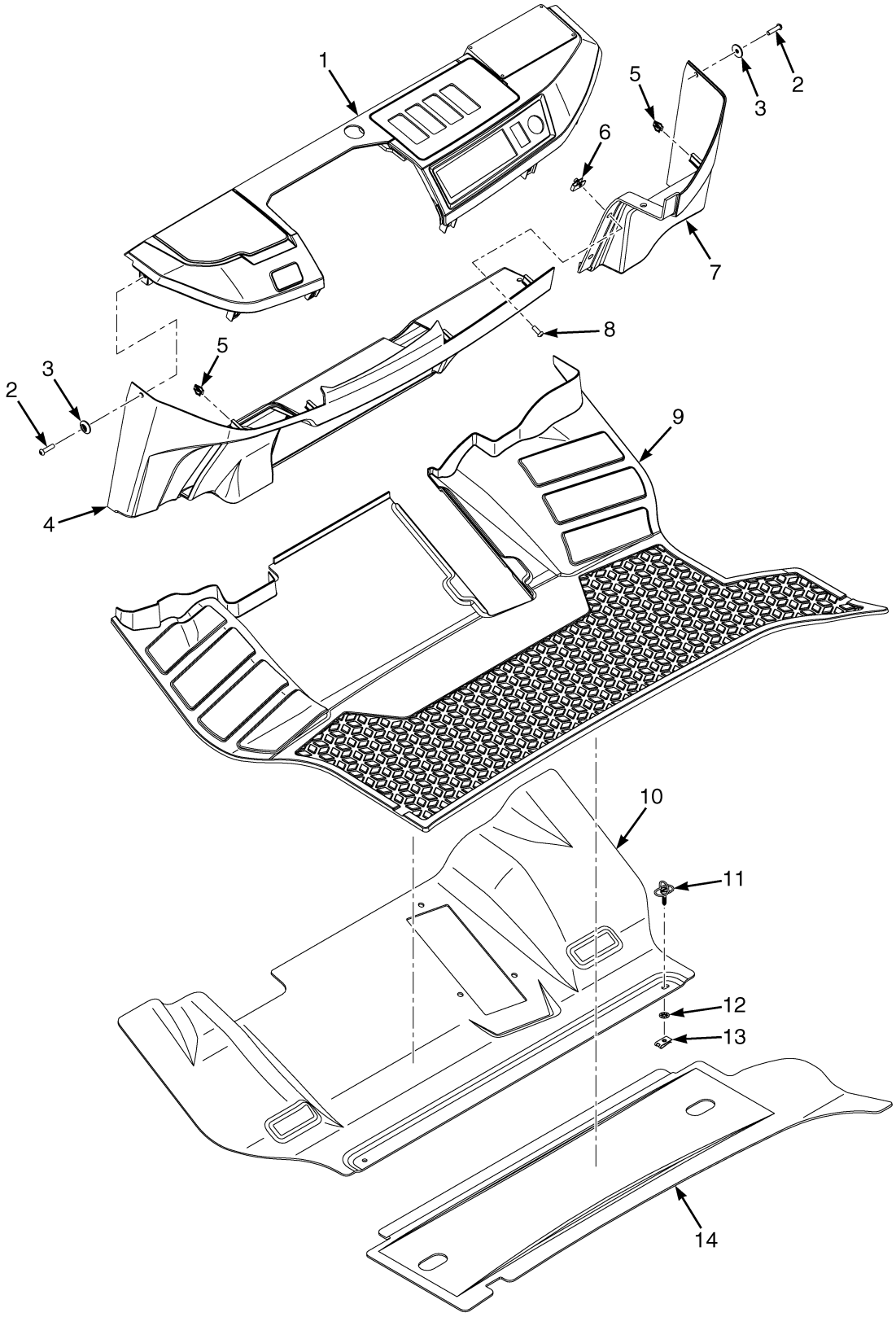

©2026 HYSTER COMPANY

ITEM	PART NO.	DESCRIPTION	QTY
1	. . . . .	Dash Panel	1
2	4242165	Screw	2
2	4196032	Screw (Alternate Part)	2
3	1709980	Washer	2
4	4699633	Cover - LH Kick Panel w/ E-Parking Brake	1
4	4735141	Cover - LH Kick Panel w/ E-Parking Brake (Alternate Part)	1
4	4699634	Cover - LH Kick Panel w/ Manual Parking Brake	1
4	4735142	Cover - LH Kick Panel w/ Manual Parking Brake (Alternate Part)	1
4	4699635	Cover - LH Kick Panel w/ Dual Throttle	1
4	4735143	Cover - LH Kick Panel w/ Dual Throttle (Alternate Part)	1
5	2065667	Clip	5
6	1566420	Nut (Foldover)	3
7	4693596	Cover - RH Kick Panel	1
8	1510126	Screw (Button Head)	3
9	4694048	Floormat - Standard w/o Heater or Air Conditioner	1
9	4694049	Floormat - Dual Pedal w/o HVAC	1
10	4309267	Floorplate - Standard w/o Heater or Air Conditioner	1
10	4257206	Floorplate - Dual Throttle Pedal w/o Heater or Air Conditioner	1
11	4312819	Fastener	2
11	4341462	Fastener (Alternate Part)	2
12	**a** 4312821	Retainer	2
13	4312820	Fastener	2
13	1566420	Nut (Foldover) (Alternate Part)	2
14	4227442	Plate (Rear)	1

FOOTNOTES:

a → 3/2022

COVERS (FIGURE 1-46)
OPERATOR COMPARTMENT — WITH HVAC

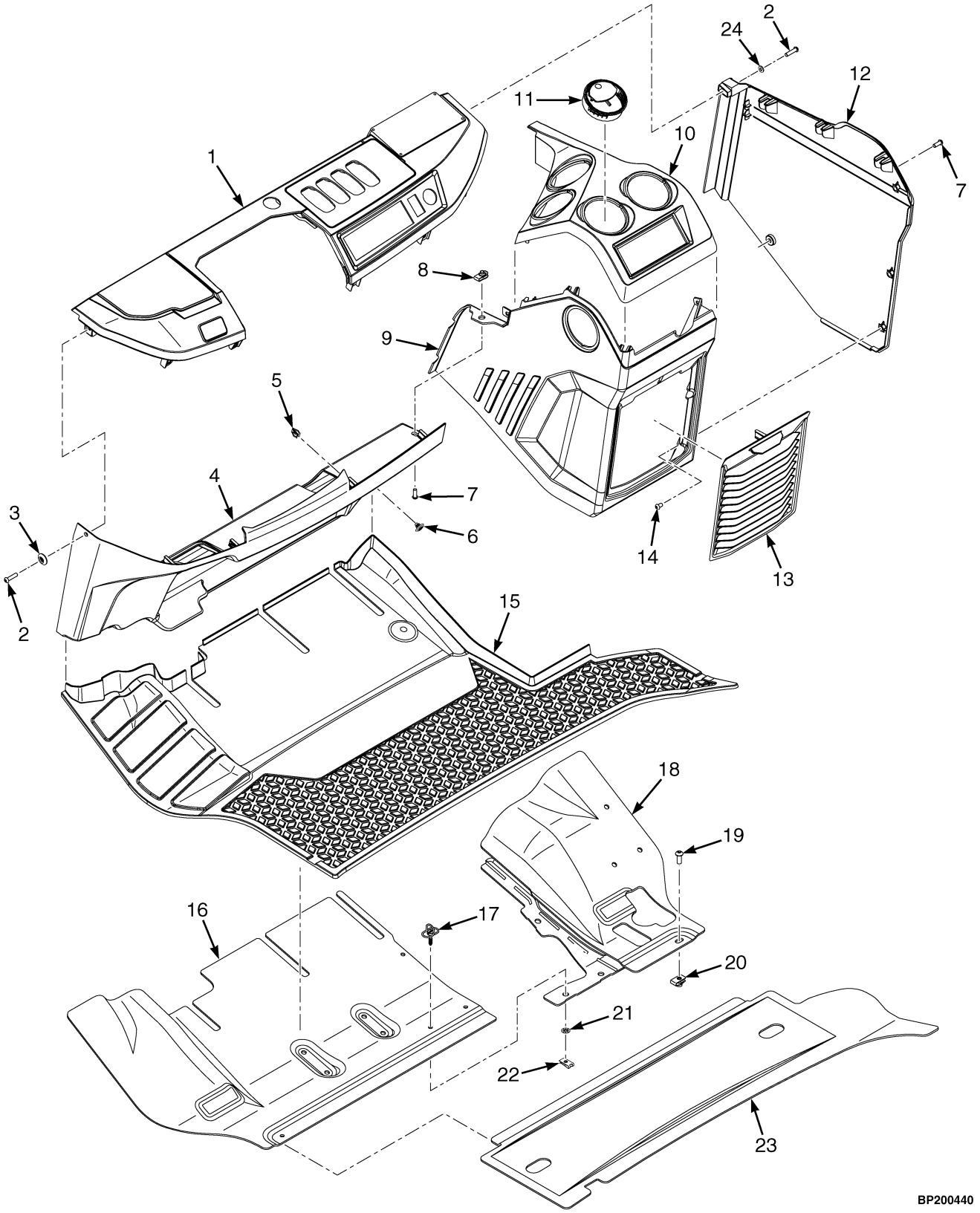

©2026 HYSTER COMPANY

COVERS

OPERATOR COMPARTMENT – WITH HVAC

ITEM	PART NO.	DESCRIPTION	QTY
1	. . . . .	Dash Panel	1
2	4242165	Screw	2
2	4196032	Screw (Alternate Part)	2
3	1709980	Washer	1
4	4699633	Cover - LH Kick Panel w/ E-Parking Brake	1
4	4735141	Cover - LH Kick Panel w/ E-Parking Brake (Alternate Part)	1
4	4699634	Cover - LH Kick Panel w/ Manual Parking Brake	1
4	4735142	Cover - LH Kick Panel w/ Manual Parking Brake (Alternate Part)	1
4	4699635	Cover - LH Kick Panel w/ Dual Throttle	1
4	4735143	Cover - LH Kick Panel w/ Dual Throttle (Alternate Part)	1
5	2065667	Clip	11
6	1698795	Plug (Black)	2
7	1510126	Screw (Button Head)	3
8	1566420	Nut (Foldover)	1
9	4691904	Cover , Heater/Ventilation/Air Conditioner (HVAC), LH	1
10	4691903	Cover , Heater/Ventilation/Air Conditioner (HVAC),Top	1
11	4180460	Vent - Round	5
12	4691905	Cover , HVAC, RH	1
13	4691906	Cover , HVAC, Grill	1
14	4242231	Screw	3
15	4694050	Floormat - Standard w/ Heater/Ventilation/Air Conditioner (HVAC)	1
15	4694051	Floormat - Dual Pedal w/ HVAC	1
16	4309268	Floorplate - Standard w/ Heater/Ventilation/Air Conditioner (HVAC)	1
16	4257207	Floorplate - Dual Pedal w/ Heater/Ventilation/Air Conditioner (HVAC)	1
17	4312819	Fastener	4
17	4341462	Fastener (Alternate Part)	2
18	4268777	Floorplate - Heater/Ventilation/Air Conditioner (HVAC) Mount (Std/Monotrol)	1
18	4333407	Floorplate - Heater/Ventilation/Air Conditioner (HVAC) Mount (Dual Pedal)	1
18	4267657	Floorplate - Heater/Ventilation/Air Conditioner (HVAC) Plate	1
19	4185437	Screw	1
20	1480237	Nut (Foldover)	1
21	**a** 4312821	Retainer	4
22	4312820	Fastener	4
22	1566420	Nut (Foldover) (Alternate Part)	2
23	4227442	Plate (Rear)	1
24	~~4217227~~		
	320156	Washer	1

FOOTNOTES:

a 3/2022 →

COMPARTMENT CUSHION SEALS (FIGURE 1-47)

FORWARD OPERATOR COMPARTMENT

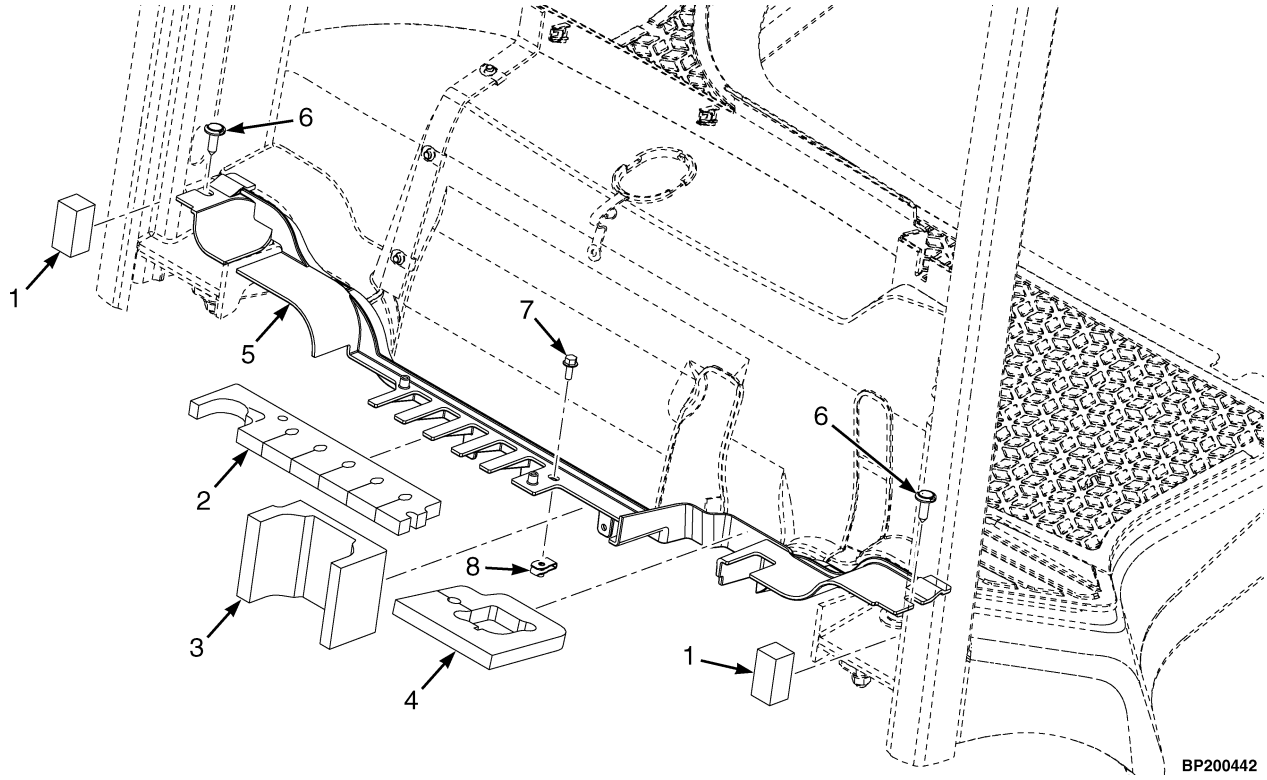

ITEM	PART NO.	DESCRIPTION	QTY
1	**a** 4265332	Foam - Seal Fig8 OHG	1
2	**a** 4263967	Foam	1
2	4732200	Seal - Cowl (Alternate Part)	1
2	4742735	Seal (Cowl Rubber) (Alternate Part)	1
3	**a** 4274121	Foam - Seal Steer Hose	1
3	4732201	Seal - Right Side (Alternate Part)	1
4	4265369	Foam - DBA Master Cyinder Seal	1
4	4732202	Seal - Dry Brake Master Cyinder Seal (Alternate Part)	1
4	4265370	Foam - WBA Master Cylinder Seal (HST)	1
4	4732203	Seal - WBA Master Cylinder Seal (HST) (Alternate Part)	1
4	4284954	Foam - Seal, WBA Boosted	1
4	4732204	Seal , Foam - Wet Brake (Boosted) (Alternate Part)	1
4	4694723	Foam - Dual Throttle Seal	1
4	4732205	Seal - Dual Throttle Seal (Alternate Part)	1
5	4689984	Seal	1
6	4265998	Rivet - Push	2
7	~~4111055~~		
	1527876	Capscrew	1
8	1566420	Nut (Foldover)	1

FOOTNOTES:

a Cab Only

©2026 HYSTER COMPANY

NOTES

COVERS (FIGURE 1-48)
EXTERIOR

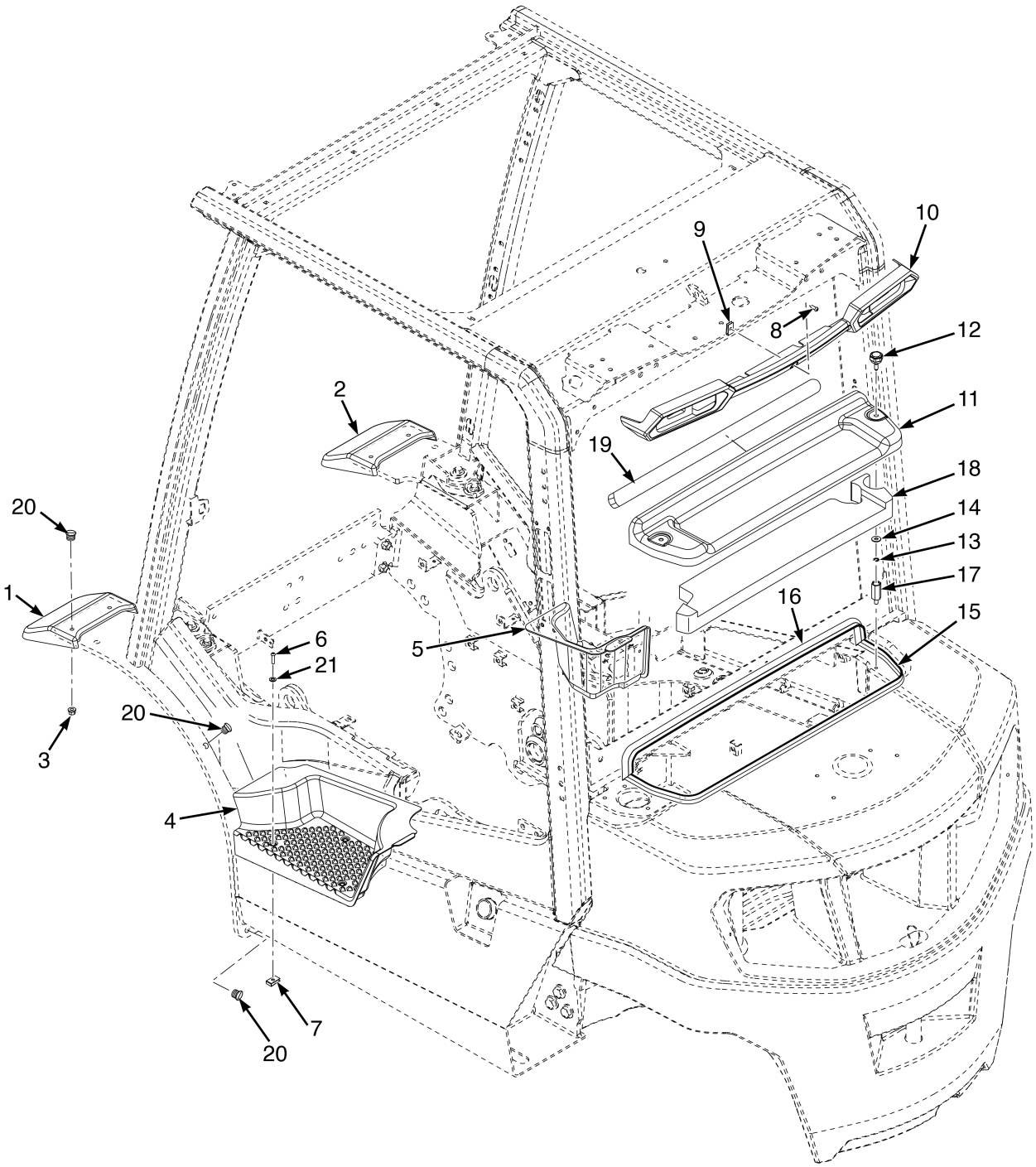

©2026 HYSTER COMPANY

COVERS
EXTERIOR

ITEM	PART NO.	DESCRIPTION	QTY
1	4697683	Guard , Mud (Std, LH)	1
1	4693884	Mud Flap - Wide, LH	1
1	4693882	Mud Flap - Dual Wide, LH	1
1	4693880	Mud Flap - Extended, LH, Intermediate	1
2	4697683	Guard , Mud (Std, RH)	1
2	4693885	Mud Flap - Wide, RH	1
2	4693883	Mud Flap - Dual Wide, RH	1
2	4693881	Mud Flap - Extended, RH, Intermediate	1
3	1544153	Locknut	4
4	4695866	Step Panel - LH	1
5	4695865	Step Panel - RH	1
6	**b** 4309812	Capscrew	6
6	**d** 4376534	Capscrew	6
7	**b** 1566420	Nut (Foldover)	6
7	**d** 1350215	Nut (Foldover)	6
8	1510126	Screw (Button Head)	3
9	325182	Nut , Foldover	3
10	4679422	Cover - Tail Light (w/ Cab) (☞Figure 11-57)	1
10	4697414	Cover - Tail Light (w/o Cab)	1
11	4261657	Cover , Assembly, Radiator (w/o A/C)	1
11	4309301	Cover , Assembly, Radiator (w/ A/C)	1
11	4261653	Cover (w/o A/C)	1
11	4309253	Cover (Radiator) (w/ A/C)	1
12	4173258	Screw	2
13	**a** 353206	Retaining Ring	2
13	**c** 4017632	Retainer	2
14	**a** 320158	Washer	2
15	4252963	Trim Seal (w/o A/C)	1
15	4309300	Trim Seal (w/ A/C)	1
16	4254021	Trim Seal (w/o A/C)	1
16	4309254	Trim Seal (w/ A/C)	1
17	4273428	Stand Off	1
18	4307848	Foam (Radiator Cover)	1
18	~~4328402~~		
	81035397	Foam (Alternate Part)	1
19	~~4328403~~		
	81035875	Foam	1
20	1581079	Plug	8
21	**d** 4043628	Washer	6

FOOTNOTES:

a → 5/2021
b → 9/2025
c 5/2021 →
d 9/2025 →

SEAT ASSEMBLY (FIGURE 1-49)
NON SUSPENSION

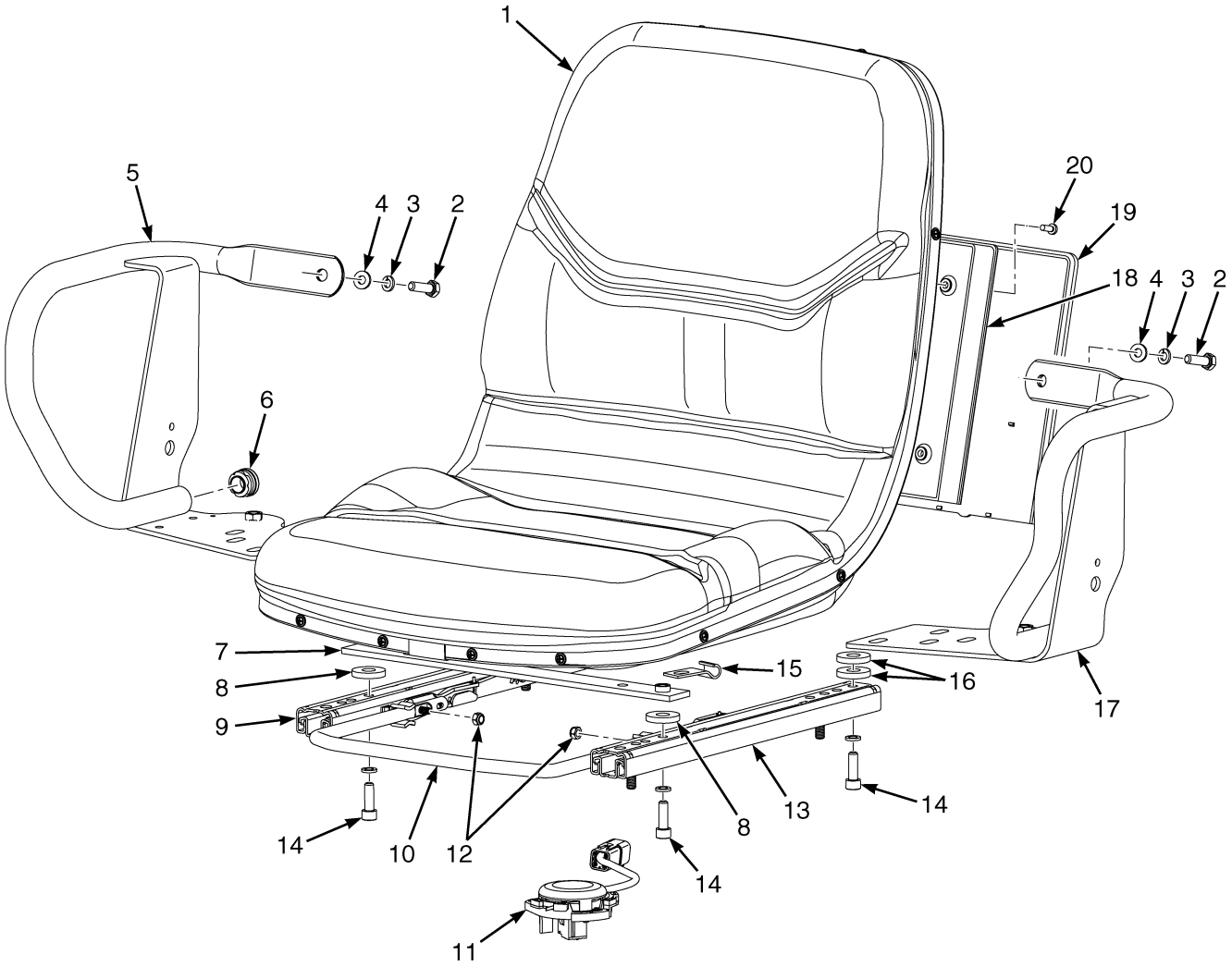

©2026 HYSTER COMPANY

SEAT ASSEMBLY
NON SUSPENSION

ITEM	PART NO.	DESCRIPTION	QTY
	4684889	Seat-Non Suspension - Vinyl	1
	4684890	Seat-Non Suspension - Cloth	1
1	4615813	Seat-Non Suspension (Vinyl)	1
1	4292593	Seat-Non Suspension (Cloth)	1
2	4292863	Bolt	8
3	4292864	Spring Washer	14
4	4292865	Washer	8
5	4292866	Hip Restraint (RH)	1
6	4292867	Cap	2
7	4118204	Plate	1
8	4292868	Spacer	2
9	4292858	Seat Rail (RH)	1
10	4292869	Handle	1
11	4244821	Sensor - Operator Presence Assembly	1
11	~~4292852~~		
	4244820	Sensor	1
11	1530960	Connector (6-Pin)	1
11	206028	E-Ring	1
12	4292870	Nut	2
13	4292849	Seat Rail (LH)	1
14	4292871	Screw	6
15	4292872	Clip	1
16	4292873	Spacer	4
17	4292874	Hip Restraint (LH)	1
18	4292857	Box (Document)	1
19	4030279	Cover	1
20	4292875	Screw	4

©2026 HYSTER COMPANY

SEATS (FIGURE 1-50)
FULL AND AIR SUSPENSION

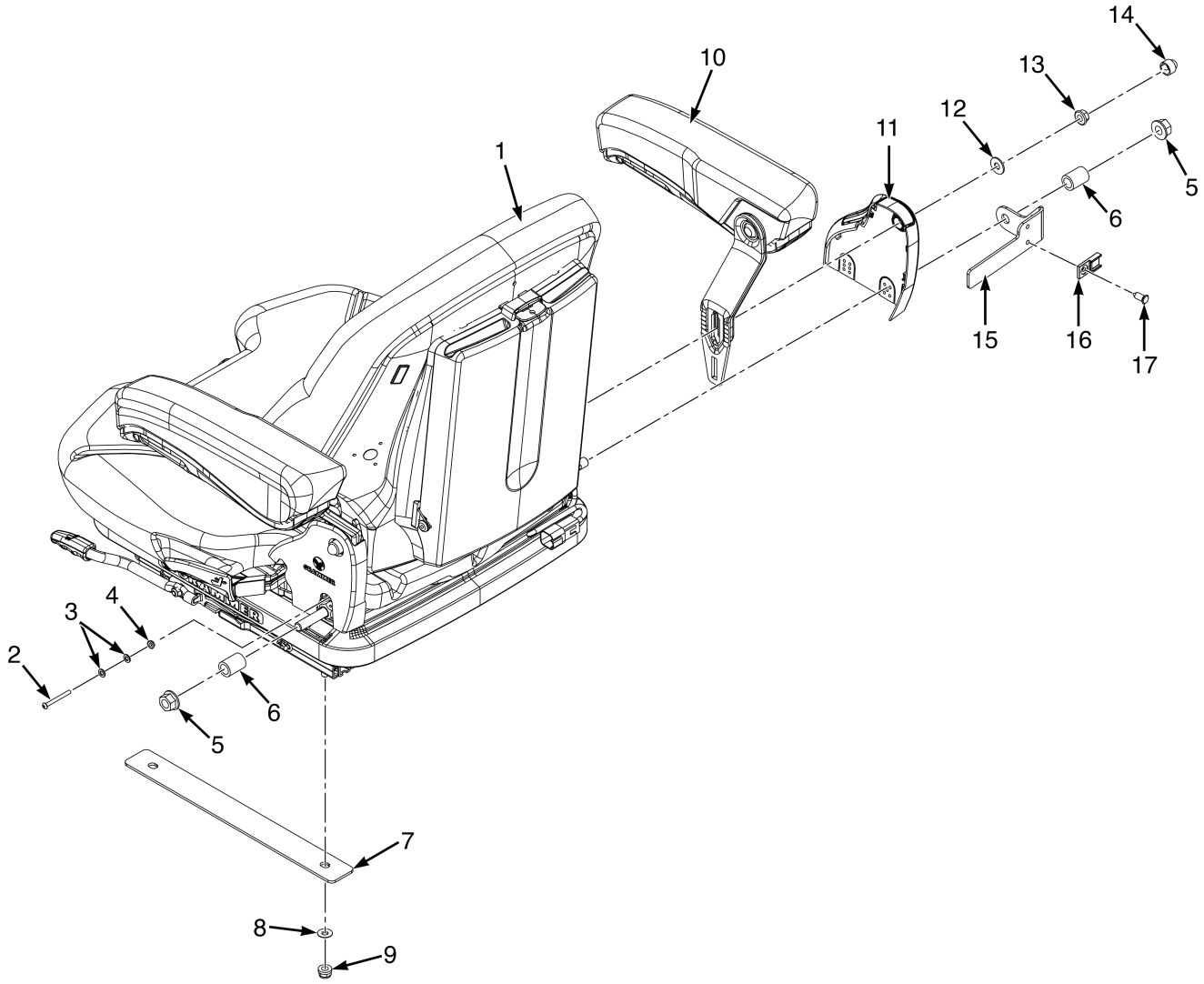

BP260258

©2026 HYSTER COMPANY

SEATS
FULL AND AIR SUSPENSION

ITEM	PART NO.	DESCRIPTION	QTY
1	4684880	Seat-Full Suspension , Vinyl	1
1	4684881	Seat-Full Suspension , Cloth	1
1	4684884	Seat-Full Suspension - Air, Vinyl	1
1	4684885	Seat-Full Suspension - Air, Cloth	1
1	4684630	Seat-Full Suspension - Low SIP, Vinyl	1
2	1565125	Screw	1
2	1697553	Capscrew (Alternate Part)	1
3	296416	Washer	2
4	1549398	Nut	1
5	264145	Nut	2
6	4154329	Spacer	1
6	1694700	Spacer (Alternate Part)	2
7	4349738	Plate (Spacer)	2
8	4660608	Nut (Push)	4
9	4187690	Locknut	4
10	4244809	Armrest - RH (M-Hyd)	1
10	. . . . .	MLM Armrest Slider (E-Hyd) (☞Figure 1-55, ☞Figure 1-56, ☞Figure 1-57)	1
11	4244811	Seat Panel - Cover, RH	1
12	320158	Washer	1
13	~~1382472~~		
	1502543	Nut	1
14	4694088	Cap	1
15	~~4691268~~		
	4740257	Bracket - Seat harness	1
16	1500912	Clip	1
17	1582464	Fastener	1
	a	Seat Belts (☞Figure 1-54)	1

FOOTNOTES:

a Not Illustrated

SEAT ASSEMBLY (FIGURE 1-51)
FULL SUSPENSION — TIANCHENG

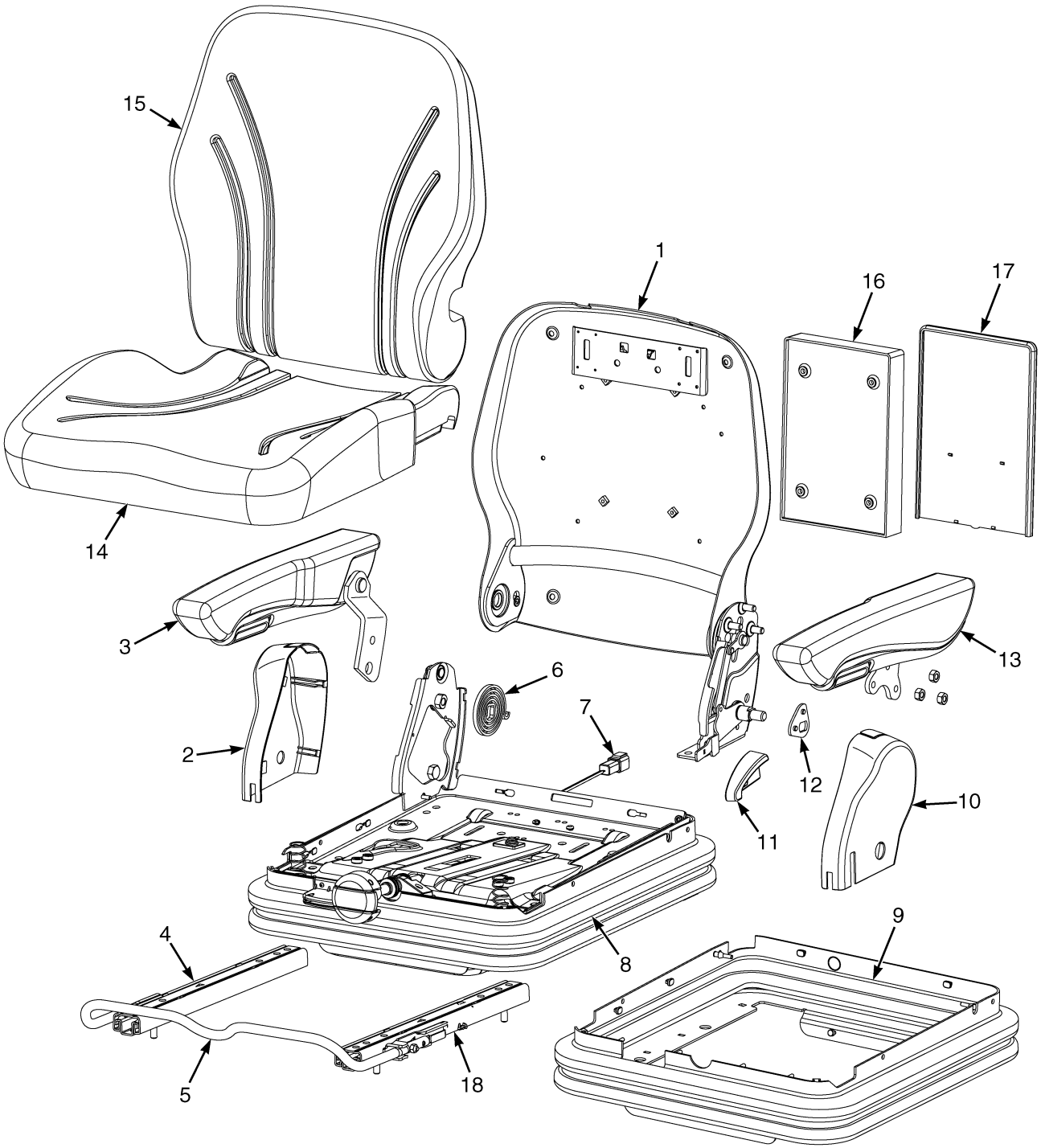

BP260176

©2026 HYSTER COMPANY

SEAT ASSEMBLY
FULL SUSPENSION – TIANCHENG

ITEM	PART NO.	DESCRIPTION	QTY
	a 4684886	Seat-Full Suspension (SC29)	1
	b 4719819	Seat-Full Suspension (SC29)	1
1	4292846	Frame (Backpan)	1
2	4292847	Cover (RH)	1
3	4292848	Armrest (RH)	1
4	4292849	Seat Rail (LH)	1
5	4292850	Handle (Slide)	1
6	4292851	Spring	1
7	~~4292852~~		
	4244820	Sensor	1
8	4292853	Suspension	1
9	4158913	Suspension (Rubber Skirt)	1
10	4292854	Cover (LH)	1
11	**a**	Recliner Handle	1
11	**b** 4159715	Handle (Recliner)	1
12	4292855	Mounting Plate (Seat Belt)	1
13	4158911	Armrest (LH)	1
14	4292856	Seat Cushion	1
15	4158914	Seat Cushion (Back)	1
16	4292857	Box (Document)	1
17	4030279	Cover	1
18	4292858	Seat Rail (RH)	1
	a 4719815	Kit-Seat Modification - Back Tilt Stop	1

FOOTNOTES:

a → 11/2022

b 11/2022 →

SEAT ASSEMBLY (FIGURE 1-52)
AIR SUSPENSION — GRAMMER

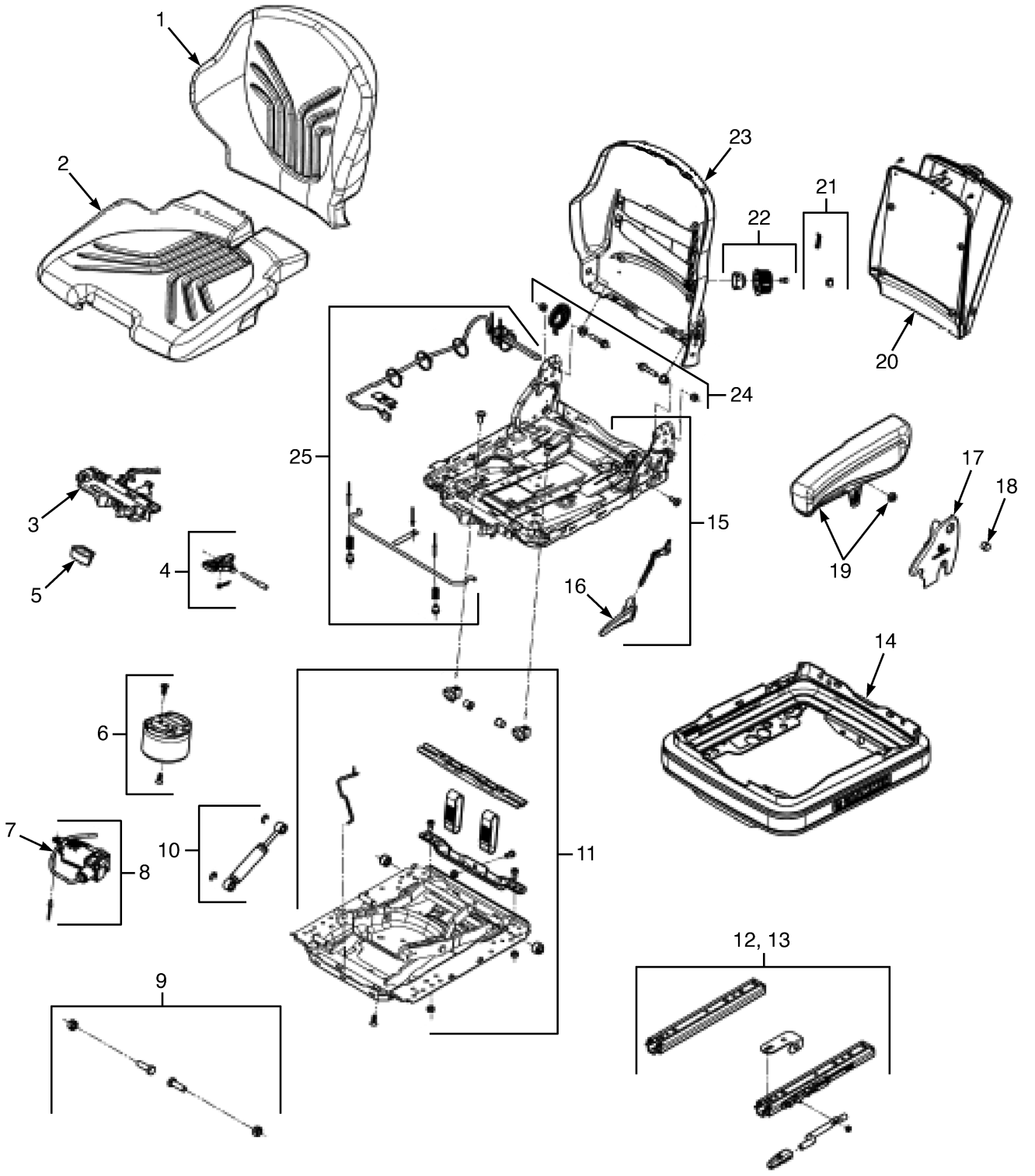

©2026 HYSTER COMPANY

SEAT ASSEMBLY
AIR SUSPENSION – GRAMMER

ITEM	PART NO.	DESCRIPTION	QTY
	4684884	Seat-Full Suspension - Air, Vinyl	1
	4684885	Seat-Full Suspension - Air, Cloth	1
1	4295024	Kit-Seat Cushion (Black Vinyl)	1
1	4295041	Kit-Seat Cushion - Heated, Vinyl (Optional)	1
1	4295028	Kit-Seat Cushion (Black Cloth)	1
1	4295042	Kit-Seat Cushion - Heated, Cloth (Optional)	1
2	4295025	Seat Cushion (Black Vinyl)	1
2	4295029	Seat Cushion (Black Cloth)	1
3	4295030	Kit-Housing	1
4	4177360	Lever	1
5	4295031	Kit-Handle	1
6	4177358	Spring - Air	1
7	4295032	Kit (Compressor Tube)	1
8	4177357	Compressor , 12V	1
9	4294916	Kit (Seat Belt Mounting)	1
10	4043020	Shock Absorber	1
11	4177353	Kit - Wear Parts	1
12	4294917	Kit-Seat Rail	1
13	4294918	Kit (Mounting Parts)	1
14	4177350	Bellows	1
15	4043026	Backrest	1
16	4043016	Grip	1
17	4294920	Cover	1
18	4694088	Cap	1
19	4177348	Armrest , Left Hand	1
20	4177345	Box (Document)	1
21	4281010	Kit-Service (Backrest - Small Parts)	1
22	4177344	Kit - Backrest Handle	1
22	4295033	Support (Lumbar)	1
23	4295037	Kit (Backpan)	1
24	4043015	Fixing Parts Kit - Backrest	1
25	4295034	Kit (Seat Harness seat switch)	1

SEAT ASSEMBLY (FIGURE 1-53)
FULL SUSPENSION — GRAMMER

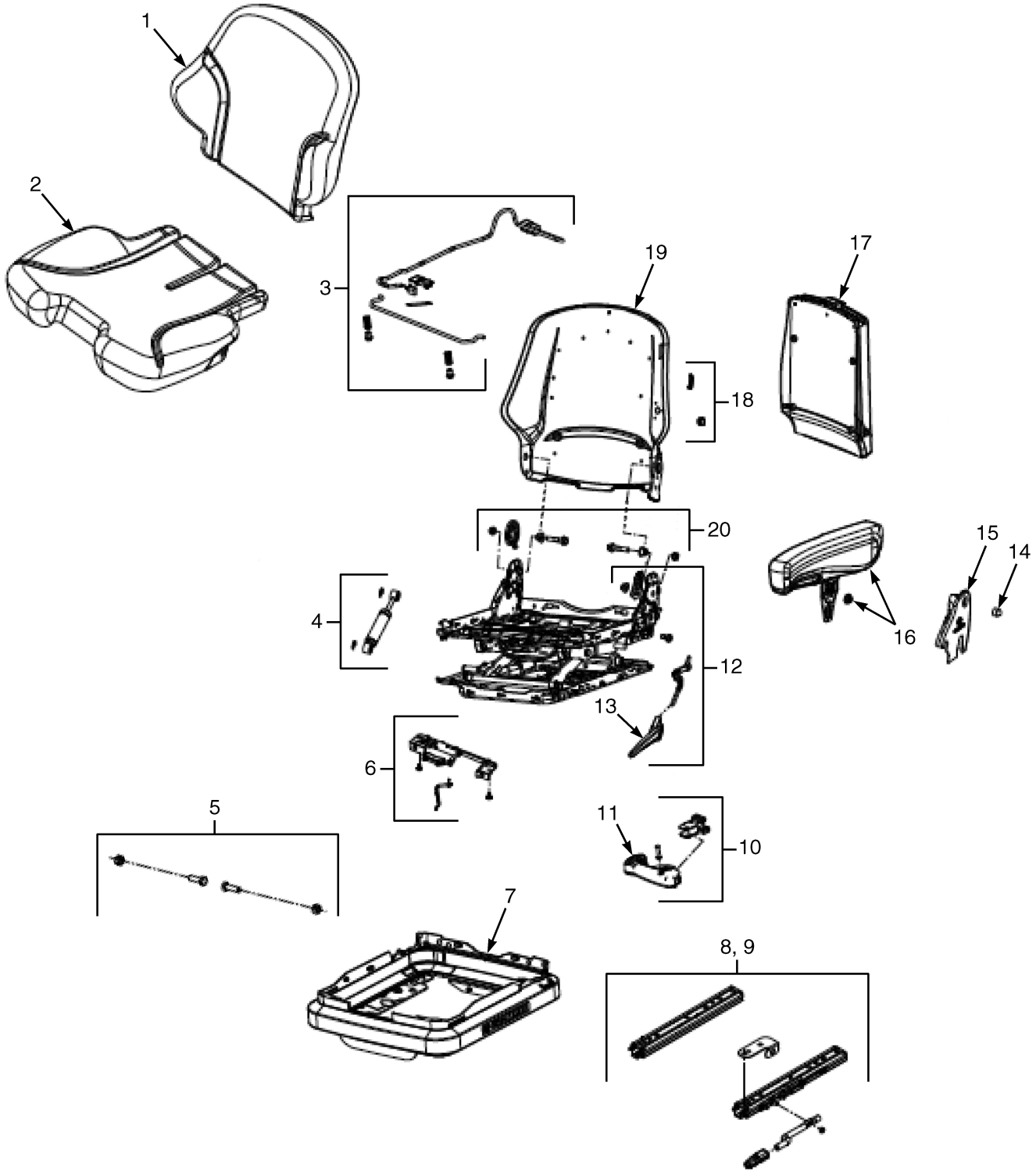

©2026 HYSTER COMPANY

SEAT ASSEMBLY
FULL SUSPENSION – GRAMMER

ITEM	PART NO.	DESCRIPTION	QTY
	4684880	Seat-Full Suspension , Vinyl	1
	4684881	Seat-Full Suspension , Cloth	1
	4684630	Seat-Full Suspension - Low SIP, Vinyl	1
1	4295024	Kit-Seat Cushion (Black Vinyl)	1
1	4295028	Kit-Seat Cushion (Black Cloth)	1
2	4295025	Seat Cushion (Black Vinyl)	1
2	4295029	Seat Cushion (Black Cloth)	1
3	4294915	Kit (Seat Harness and seat switch)	1
4	4043020	Shock Absorber	1
5	4294916	Kit (Seat Belt Mounting)	1
6	4043017	Housing	1
7	4043012	Bellows	1
8	4294917	Kit-Seat Rail	1
9	4294918	Kit (Mounting Parts)	1
10	4043014	Handle	1
11	4294919	Kit (Gray Handle)	1
12	4295026	Seat Assy (Backrest Adjustment)	1
13	4043016	Grip	1
14	4694088	Cap	1
15	4294920	Cover	1
16	4177348	Armrest , Left Hand	1
17	4177345	Box (Document)	1
18	4281010	Kit-Service (Backrest - Small Parts)	1
19	4295027	Kit - Back Pan	1
20	4043015	Fixing Parts Kit - Backrest	1

©2026 HYSTER COMPANY

SEAT BELT OPTIONS (FIGURE 1-54)

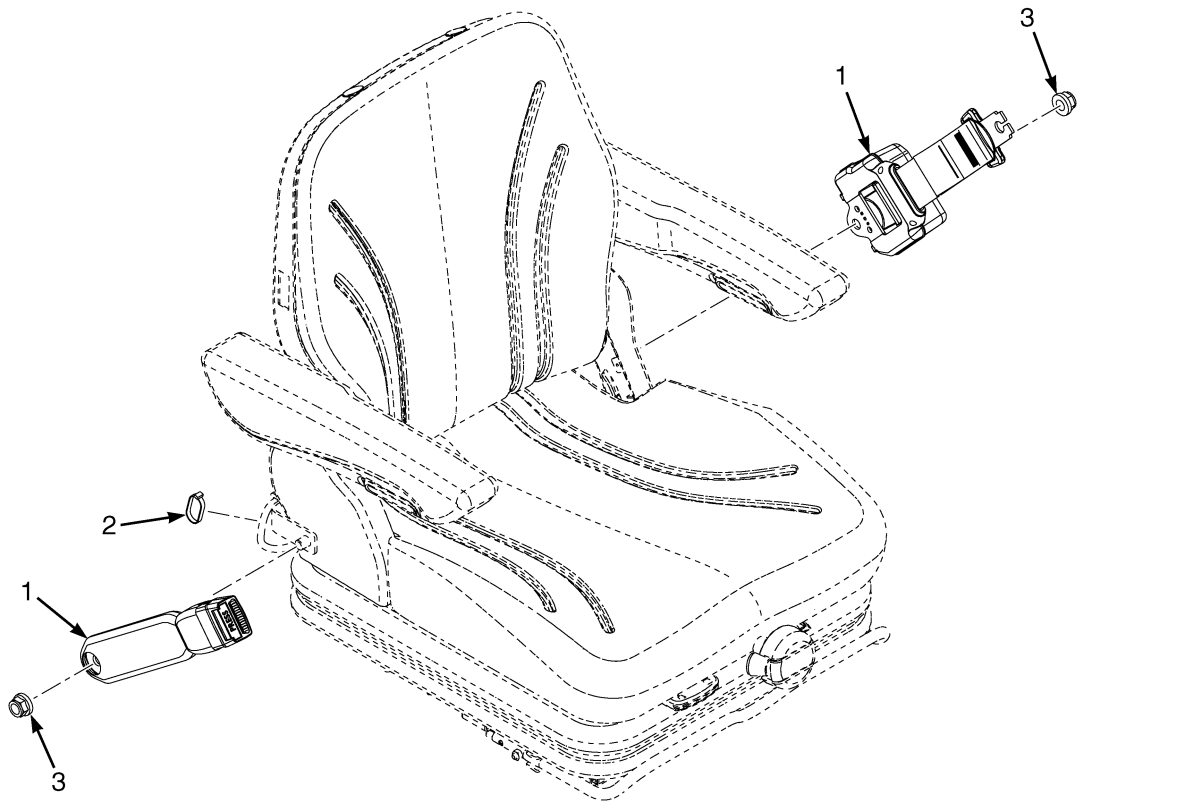

ITEM	PART NO.	DESCRIPTION	QTY
1	4244806	Seat Belt - Standard	1
1	4244807	Seat Belt - Red, High Visibility	1
1	4244808	Seat Belt - Red, High Visibility w/ Interlock	1
2	2004005	Strap Clamp (Interlock)	1
3	4187692	Locknut (SC29)	2
3	264145	Nut	2

©2026 HYSTER COMPANY

NOTES

MLM ARMREST SLIDER ASSEMBLY (FIGURE 1-55)

PAGE 1 OF 2 (→ 7/2020)

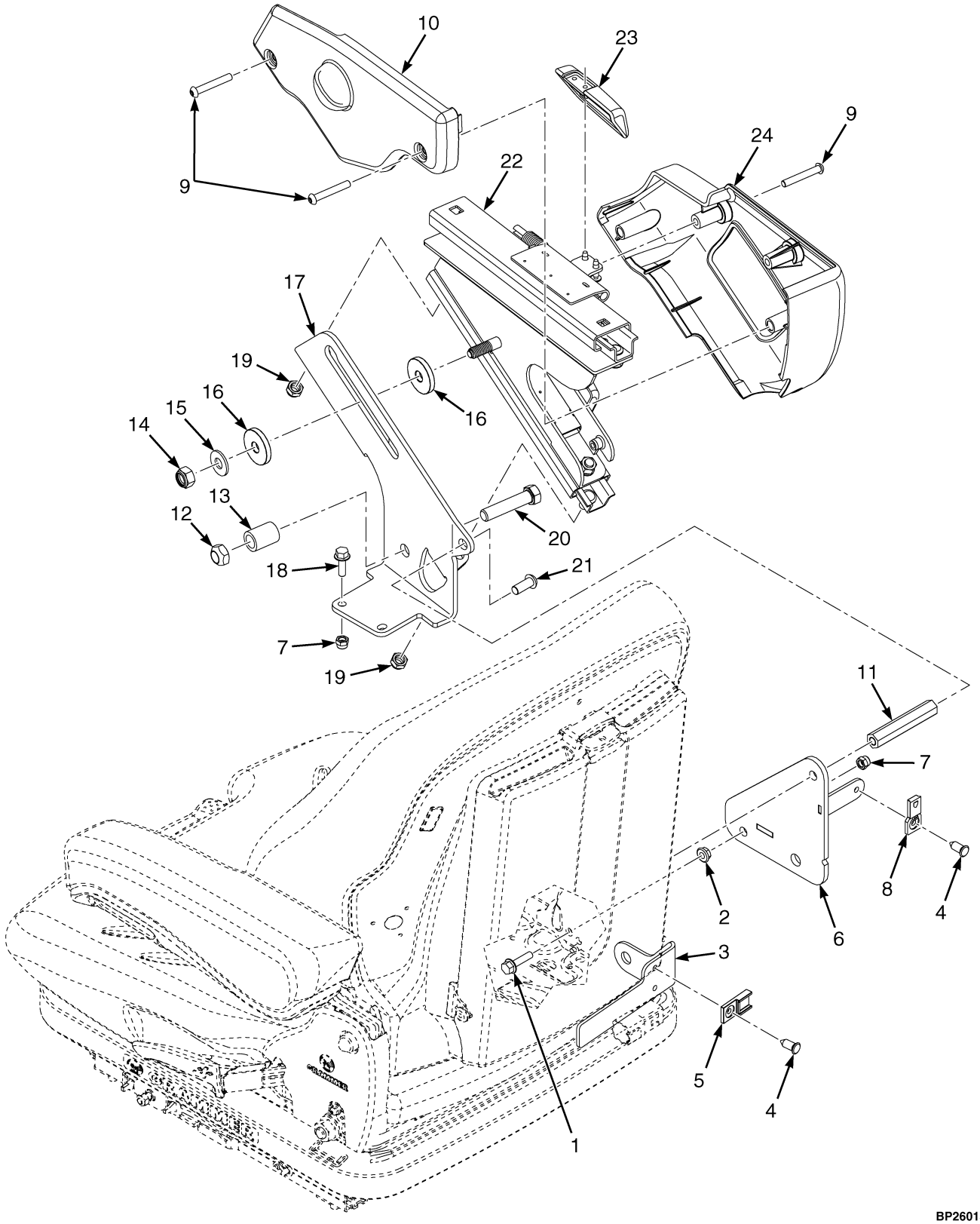

©2026 HYSTER COMPANY

MLM ARMREST SLIDER ASSEMBLY

PAGE 1 OF 2 (→ 7/2020)

ITEM	PART NO.	DESCRIPTION	QTY
1	1527878	Capscrew	1
2	~~1307884~~		
	1514429	Nut	1
3	~~4691268~~		
	4740257	Bracket - Seat harness	1
4	1582464	Fastener	2
5	1500912	Clip	1
6	4698017	Bracket Wldmt (Grammer Armrest Mount)	1
7	4050426	Locknut	3
8	1531480	Clip	1
9	4216689	Screw	5
10	4603493	Cover	1
11	4697252	Spacer	1
12	221353	Locknut	1
13	1694700	Spacer	1
14	302401	Locknut	1
15	320160	Washer	1
16	1650640	Washer	2
17	4004775	Bracket	1
18	1527877	Capscrew	2
19	1581739	Nut	2
20	221542	Capscrew	1
21	4185437	Screw	1
22	4005010	Armrest (Slider for Mini Lever)	1
23	**a** 4227514	Handle (Slider)	1
24	4603492	Cover	1

FOOTNOTES:

a Handle does not come with 4005010 and must be ordered seperately.

©2026 HYSTER COMPANY

MLM ARMREST SLIDER ASSEMBLY (FIGURE 1-56)

PAGE 2 OF 2 (→ 7/2020)

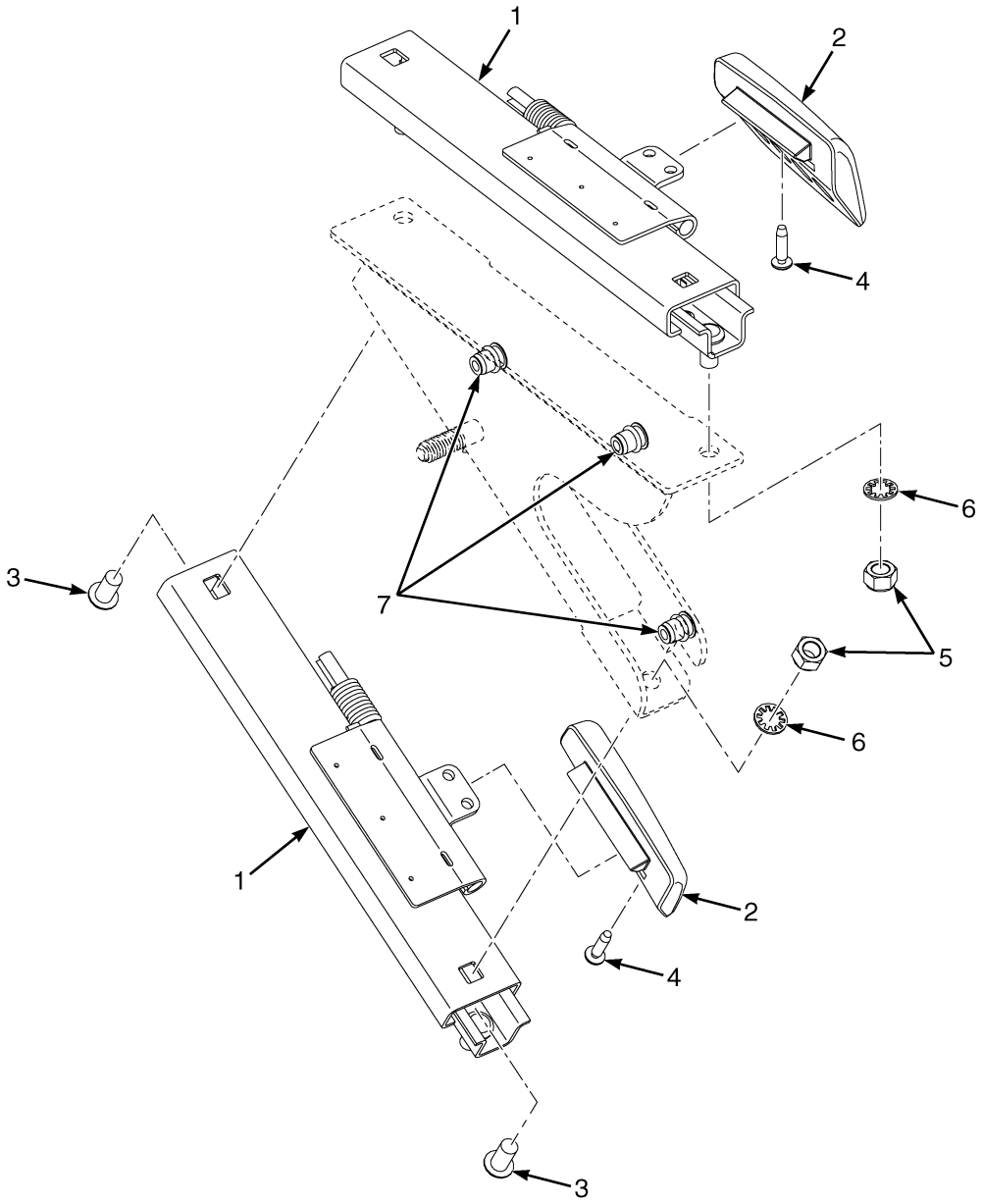

BP260154

©2026 HYSTER COMPANY

ITEM	PART NO.	DESCRIPTION	QTY
	4005010	Armrest (Slider for Mini Lever)	1
1	1686971	Armrest (Handle Slide Assembly)	2
2	1655865	Handle (Slider)	2
3	296165	Capscrew	2
4	227157	Screw	4
5	313828	Nut	4
6	296360	Washer	4
7	1531558	Insert	3

©2026 HYSTER COMPANY

MLM ARMREST SLIDER ASSEMBLY (FIGURE 1-57)

(7/2020 →)

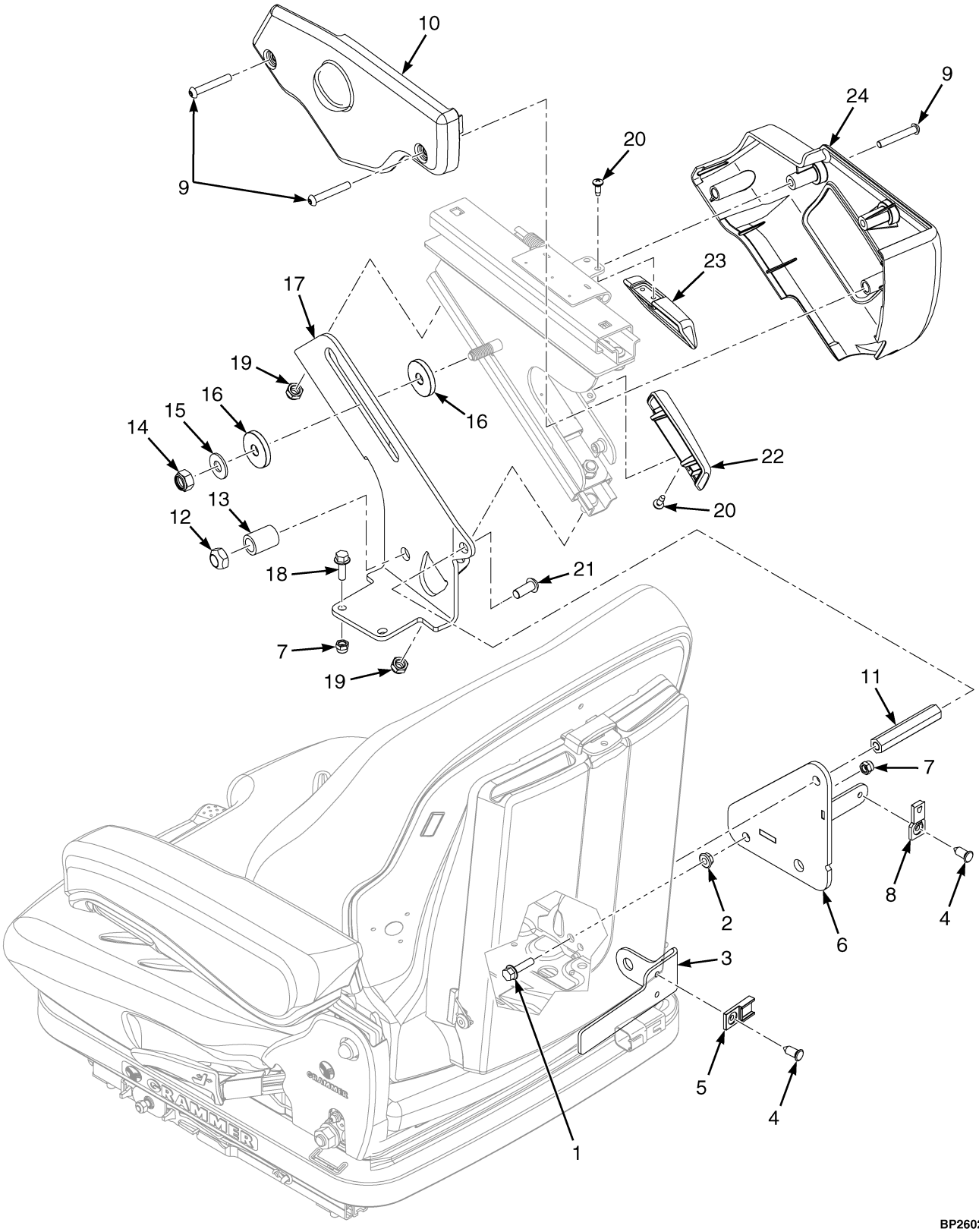

©2026 HYSTER COMPANY

MLM ARMREST SLIDER ASSEMBLY

(7/2020 →)

ITEM	PART NO.	DESCRIPTION	QTY
1	1527878	Capscrew	1
2	~~1307884~~		
	1514429	Nut	1
3	~~4691268~~		
	4740257	Bracket - Seat harness	1
4	1582464	Fastener	2
5	1500912	Clip	1
6	4698017	Bracket Wldmt (Grammer Armrest Mount)	1
6	4381908	Bracket Wldmt (Grammer Armrest Mount) (Alternate Part)	1
7	4050426	Locknut	3
8	1531480	Clip	1
9	4216689	Screw	5
10	4603493	Cover	1
11	4697252	Spacer	1
12	221353	Locknut	1
13	1694700	Spacer	1
14	302401	Locknut	1
15	320160	Washer	1
16	1650640	Washer	2
17	4004775	Bracket	1
18	1527877	Capscrew	2
19	1581739	Nut	2
20	227155	Screw	4
21	4185437	Screw	1
22	4287713	Handle (Slider)	1
23	4227514	Handle (Slider)	1
24	4603492	Cover	1

©2026 HYSTER COMPANY

LABELS (FIGURE 1-58)
1 OF 2

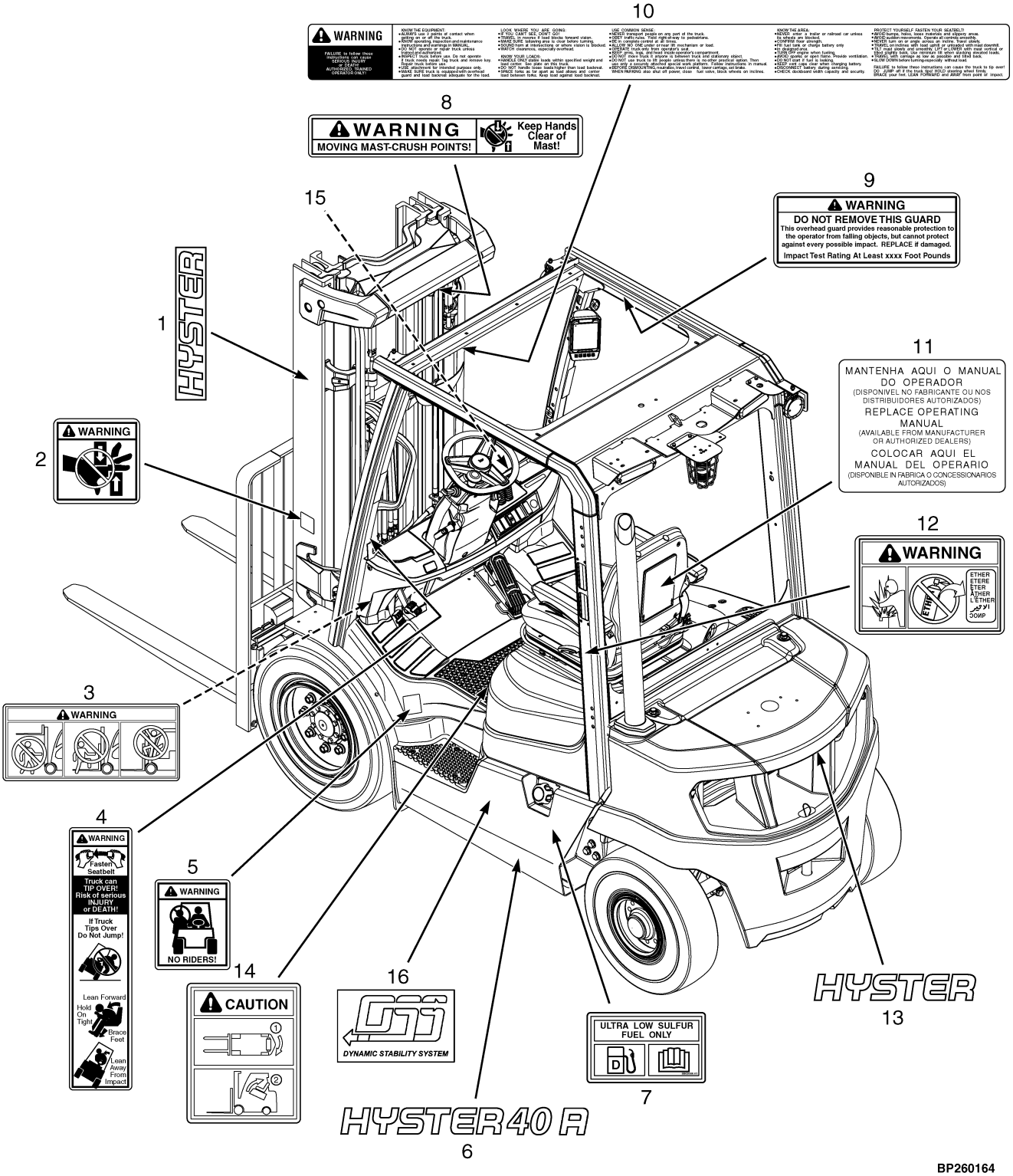

©2026 HYSTER COMPANY

LABELS
1 OF 2

ITEM	PART NO.	DESCRIPTION	QTY
1	1562353	Label (Hyster)	2
2	1335129	Label (Pinch Point)	2
2	1339832	Label (Pinch Point) (Alternate Part)	2
3	2075656	Label (Mast Warning)	2
4	1330917	Label (Operator Restraint)	2
4	4715531	Label (Operator Restraint) (Alternate Part)	2
5	1330920	Label (No Riders)	2
5	1339828	Label (No Riders) (Alternate Part)	2
6	4261478	Label (Capacity 40A)	2
6	4337308	Label (Capacity 40A) (Alternate Part)	2
6	4261479	Label (Capacity 50A)	2
6	4337309	Label (Capacity 50A) (Alternate Part)	2
6	4261554	Label (Capacity 55A)	2
6	4337310	Label (Capacity 55A) (Alternate Part)	2
6	4261480	Label (Capacity 60A)	2
6	4337311	Label (Capacity 60A) (Alternate Part)	2
6	4261481	Label (Capacity 70A)	2
6	4337312	Label (Capacity 70A) (Alternate Part)	2
7	4606610	Label (Fuel Fill)	1
8	1330919	Label (Mast Warning)	1
9	1335147	Label (Overhead Guard Impact Rating Plate)	1
10	2073197	Label (Operator Warning)	1
10	4715161	Label (Operator Warning - English) (Alternate Part)	1
11	1328205	Label (Replace Operator Manual)	1
12	2034459	Label (Ether Warning)	1
12	2034460	Label (Ether Warning) (Alternate Part)	1
13	4261542	Label , Counterweight (Hyster)	1
14	2075615	Label (Hood Opening)	1
14	4698767	Label - LPG w/ Non Suspension Seat	1
14	4698768	Label - LPG w/ Full Susp, Man Levers	1
14	4718595	Label (Hood Open Caution Rear Screen) (Non Suspension Seat)	1
14	4718599	Label (Hood Open Caution Rear Screen) (LPG w/ Non Suspension Seat)	1
14	4718596	Label (Hood Open Caution Rear Screen) (Full Suspension Seat w/ Manual lLevers)	1
14	4718600	Label (Hood Open Caution Rear Screen) (E-Hyd Seat)	1
14	4718601	Label (Hood Open Caution Rear Screen) (LPG Full Suspension Seat w/ Manual lLevers)	1
14	4718602	Label (Hood Open Caution Rear Screen) (LPG w/ E-Hyd Seat)	1
15	~~1374549~~		
	4612320	Label (Radial Tire Warning)	1
16	4307989	Label , Dynamic Stablity System (DSS)	2
	a 4715195	Label (Operator Warning Tipover - English)	1
	a 81051731	Label (Intelimatch)	2
99	81051729	Label (Hydroatch)	2

FOOTNOTES:

a Not Illustrated.

LABELS (FIGURE 1-59)
2 OF 2

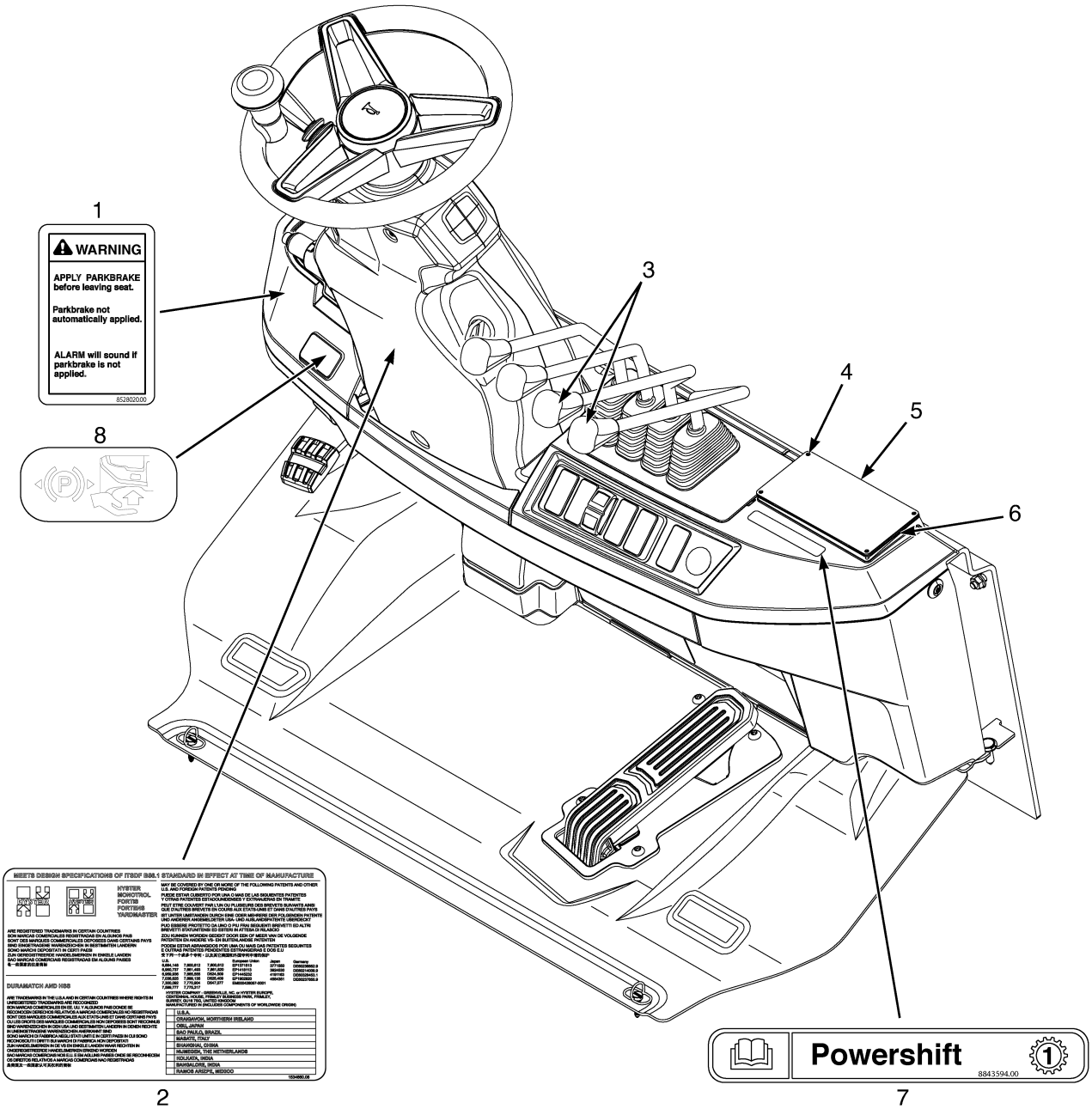

BP260165

©2026 HYSTER COMPANY

LABELS
2 OF 2

ITEM	PART NO.	DESCRIPTION	QTY
1	2074209	Label (Parking Brake Warning)	1
1	2074210	Label (Parking Brake Warning) (Alternate Part)	1
2	1534660	Label (Patents and Trademarks)	1
2	4715515	Label (Patents and Trademarks) (Alternate Part)	1
3	2102678	Label (Positioner)	1
3	4643468	Label (Rotator)	1
3	4657061	Label (Clamp)	1
3	4657062	Label (Reach)	1
3	4657063	Label (Stabliizer)	1
3	4657064	Label (Push/Pull)	1
4	170658	Rivet	4
5	389688	Nameplate Cover	1
6	878719	Label (Blank)	1
7	4695206	Label (Hydrostatic Transmission)	1
7	4695205	Label (Powershift 1 Speed)	1
8	4285557	Label - Brake Release	1

©2026 HYSTER COMPANY

LABELS (FIGURE 1-60)
MLM AND JOYSTICK

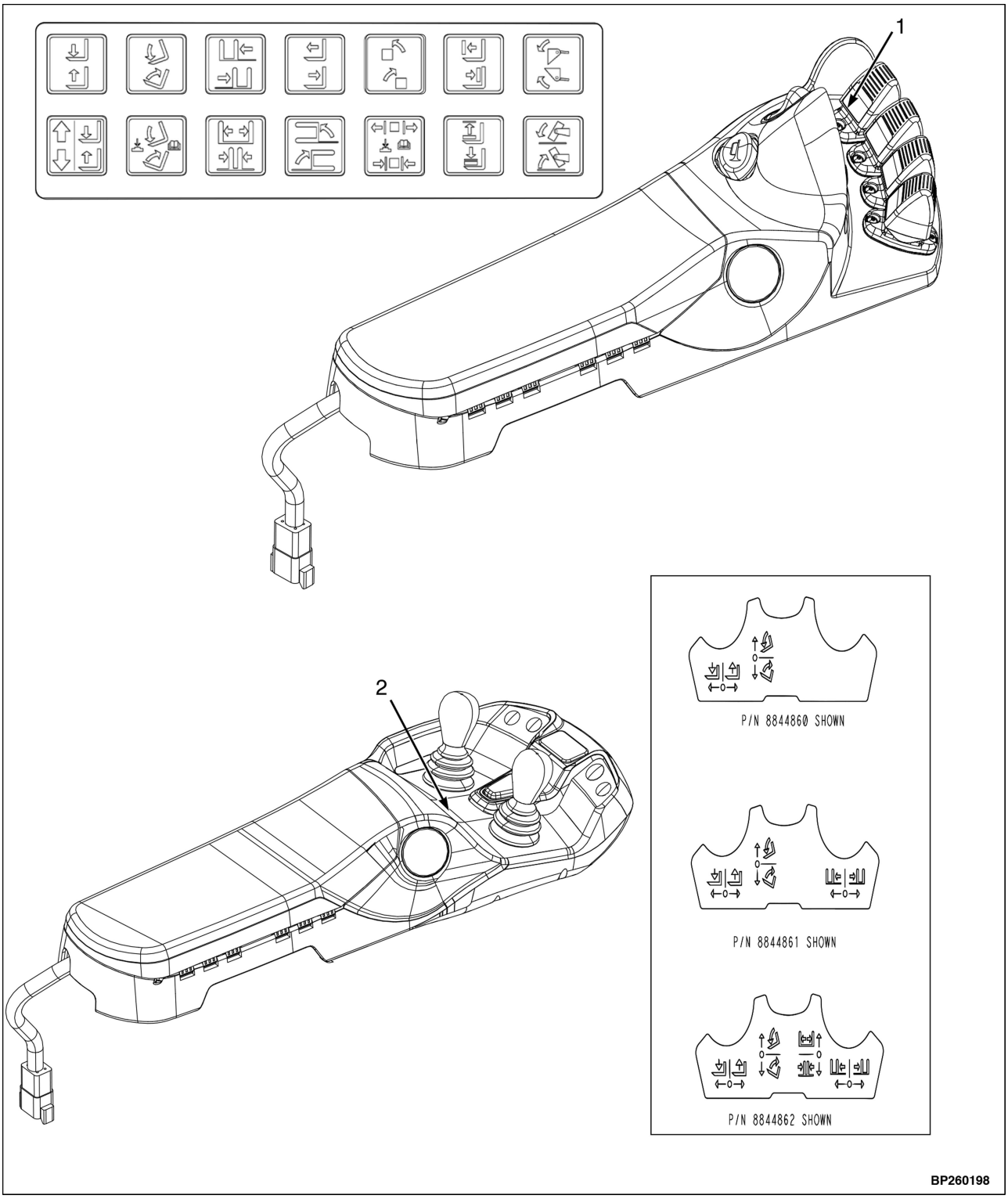

©2026 HYSTER COMPANY

LABELS
MLM AND JOYSTICK

ITEM	PART NO.	DESCRIPTION	QTY
1	2102640	Label - Lever Function	1
2	4697730	Label (Dual Joystick Hoist/Tilt Only)	1
2	4697731	Label (Dual Joystick Hoist/Tilt/Side-Shift)	1
2	4697732	Label (Dual Joystick Hoist/Tilt/Fork Spread/Side-Shift)	1

©2026 HYSTER COMPANY

NOISE ABATEMENT (FIGURE 1-61)

HOOD LINERS (→ 2/2022)

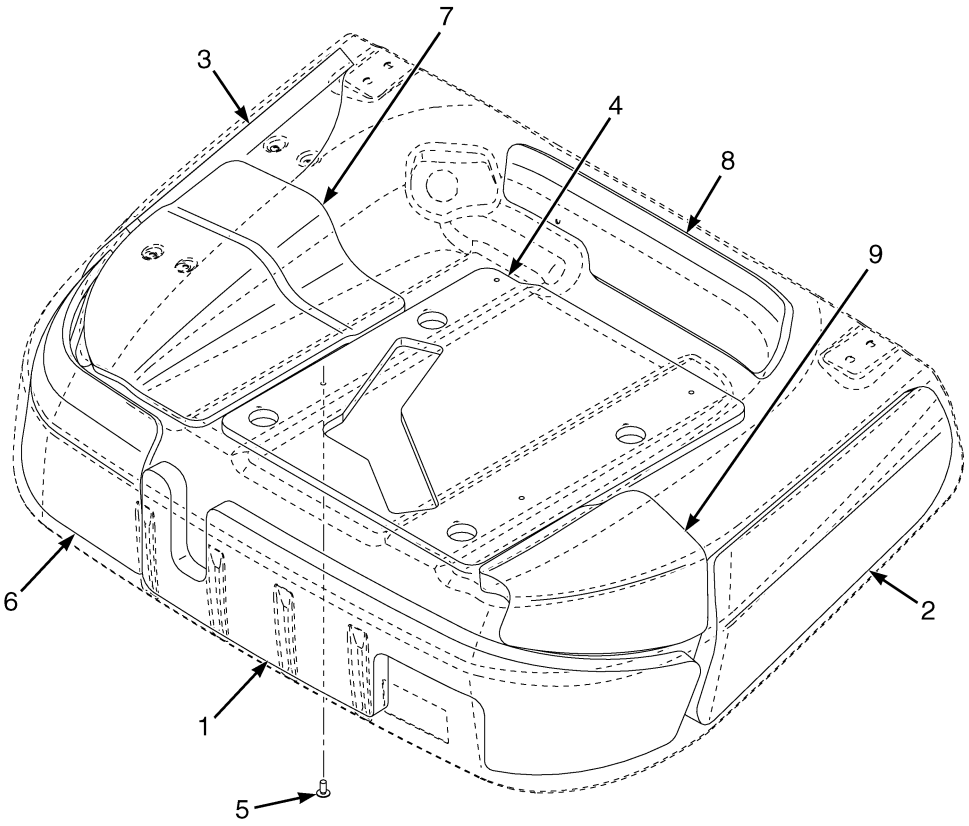

BP260178

KEY:
A: 2.1L Non Vented
B: 2.1L Vented
C: 2.2-3.3L Non Vented
D: 2.2-3.3L Vented

ITEM	PART NO.	DESCRIPTION	QTY A	QTY B	QTY C	QTY D
1	4288325	Sound Liner - Hood, Front	1	1	1	1
2	4272791	Sound Liner - Hood, LH	1	..	1	..
3	4272792	Sound Liner - Hood, RH	1	..	1	..
4	4288905	Liner - Hood, Seat Pan, 2.1L	1	1	..	..
4	4267538	Liner - Hood, Seat Pan	..	..	1	1
5	1307737	Fastener	4	4	4	4
6	4288473	Sound Liner - Hood, Corner	1	1	..	..
6	4272790	Sound Liner - Hood, Corner	..	..	1	1
7	4288472	Sound Liner - Front	1	1	..	..
8	4288809	Sound Liner - Hood	1	1	..	..
9	4288808	Sound Liner - Hood	1	1	..	..

©2026 HYSTER COMPANY

NOTES

NOISE ABATEMENT (FIGURE 1-62)

HOOD LINERS (2/2022 →)

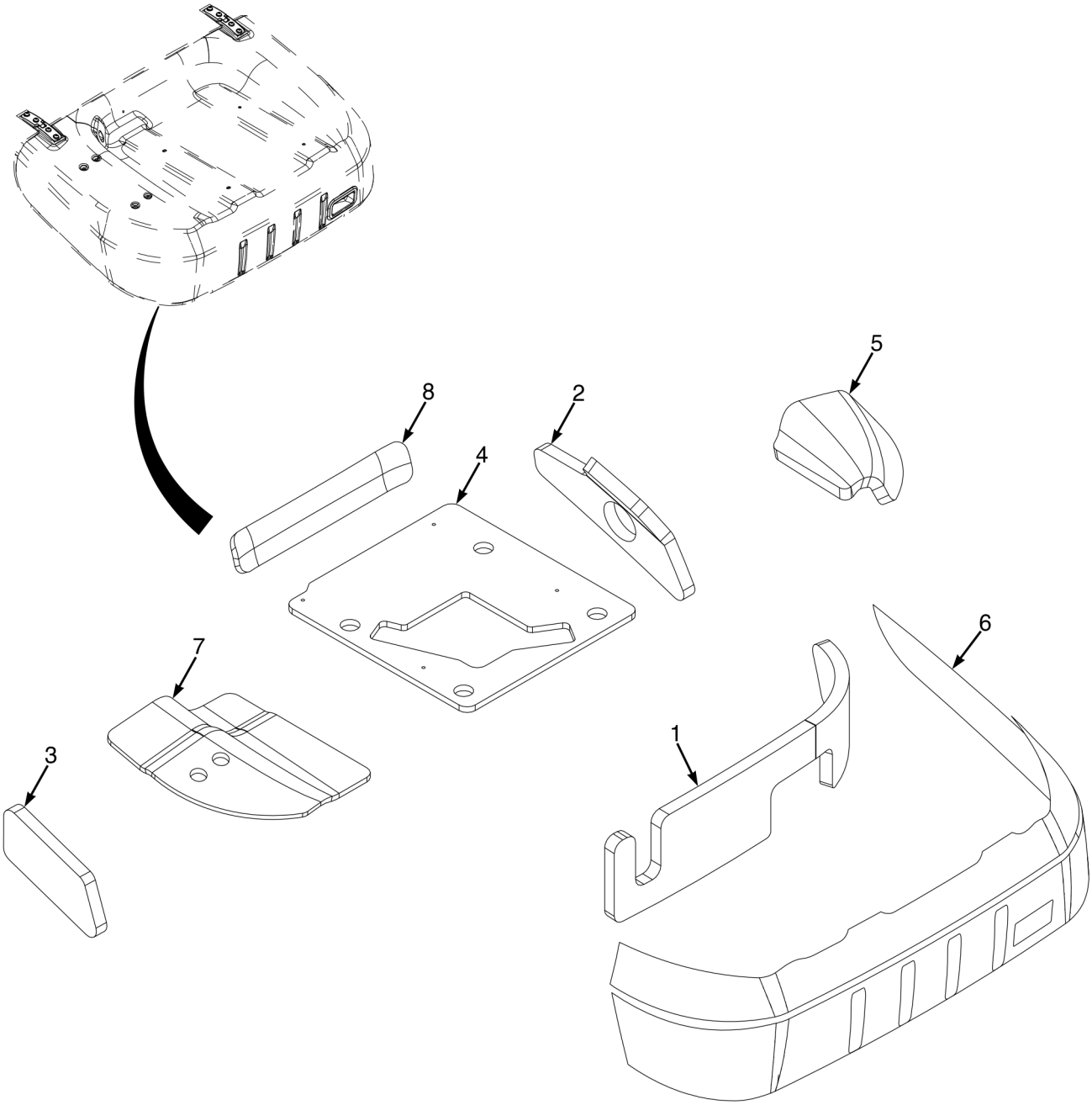

BP260232

See Service Manual for service procedures.
©2026 HYSTER COMPANY

NOISE ABATEMENT

HOOD LINERS (2/2022 →)

KEY:
A: Non Vented
B: Vented

ITEM	PART NO.	DESCRIPTION	QTY A	QTY B
1	4325287	Sound Liner (Hood Front)	1	1
2	4325288	Sound Liner (LH)	1	..
2	4361284	Sound Liner (LH) (Alternate Part)	1	..
3	4325291	Sound Liner (RH)	1	..
4	4267538	Liner - Hood, Seat Pan	1	1
4	4325290	Liner (Hood Seat Pan) (Alternate Part)	1	1
5	4325289	Sound Liner (Hood)	1	..
6	4288473	Sound Liner - Hood, Corner	1	1
7	4288472	Sound Liner - Front (2.1L Dsl Only)	1	1
8	4325346	Sound Liner (Hood)	1	1

©2026 HYSTER COMPANY

NOISE ABATEMENT (FIGURE 1-63)
DASH AND KICK PANEL LINERS

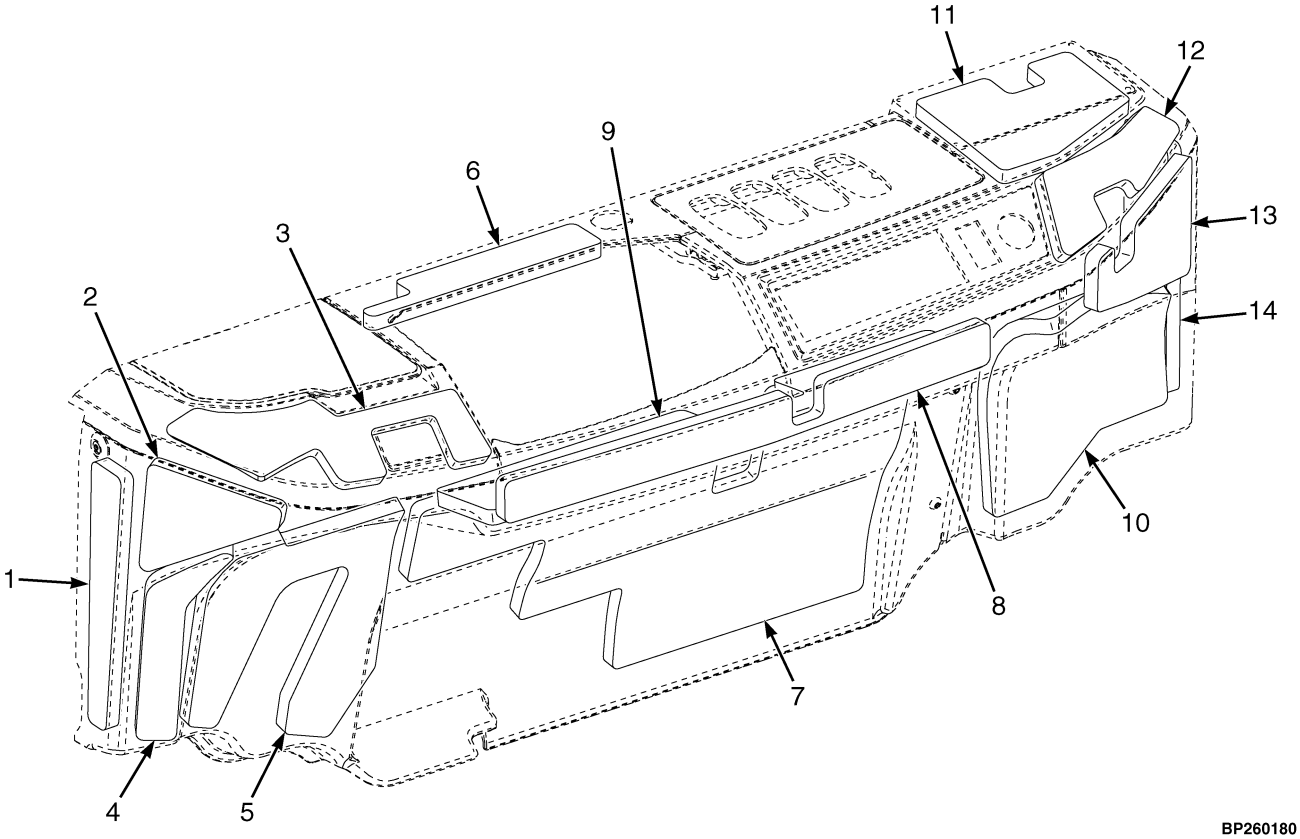

BP260180

ITEM	PART NO.	DESCRIPTION	QTY
1	4288887	Sound Liner - Kick Panel, Side, LH	1
2	4288888	Sound Liner - Kick Panel, Upper, LH	1
3	4291286	Sound Liner - Dash, Side, LH	1
4	4288889	Sound Liner - Kick Panel, Lower, LH	1
5	4288883	Sound Liner - Kick Panel, Parking Brake, LH (Std Throttle)	1
5	4291291	Sound Liner - Kick Panel, Blank, LH (Dual Throttle)	1
6	4291288	Sound Liner - Dash, Center	1
7	4288882	Sound Liner - Kick Panel, Std Throttle (Std Throttle)	1
7	4288884	Sound Liner - Kick Panel, Dual Throttle (Dual Throttle)	1
8	4291459	Sound Liner - Kick Panel, Center	1
9	4291460	Sound Liner - Kick Panel, Center, Low	1
10	4288881	Sound Liner - Kick Panel, Lower, RH	1
11	4291289	Sound Liner - Dash, Nameplate, Bottom	1
12	4291287	Sound Liner - Dash, Side, RH	1
13	4288885	Sound Liner - Kick Panel, Upper, RH	1
14	4288886	Sound Liner - Kick Panel, Side, RH	1

©2026 HYSTER COMPANY

NOISE ABATEMENT (FIGURE 1-64)
OPERATOR COMPARTMENT FRAME

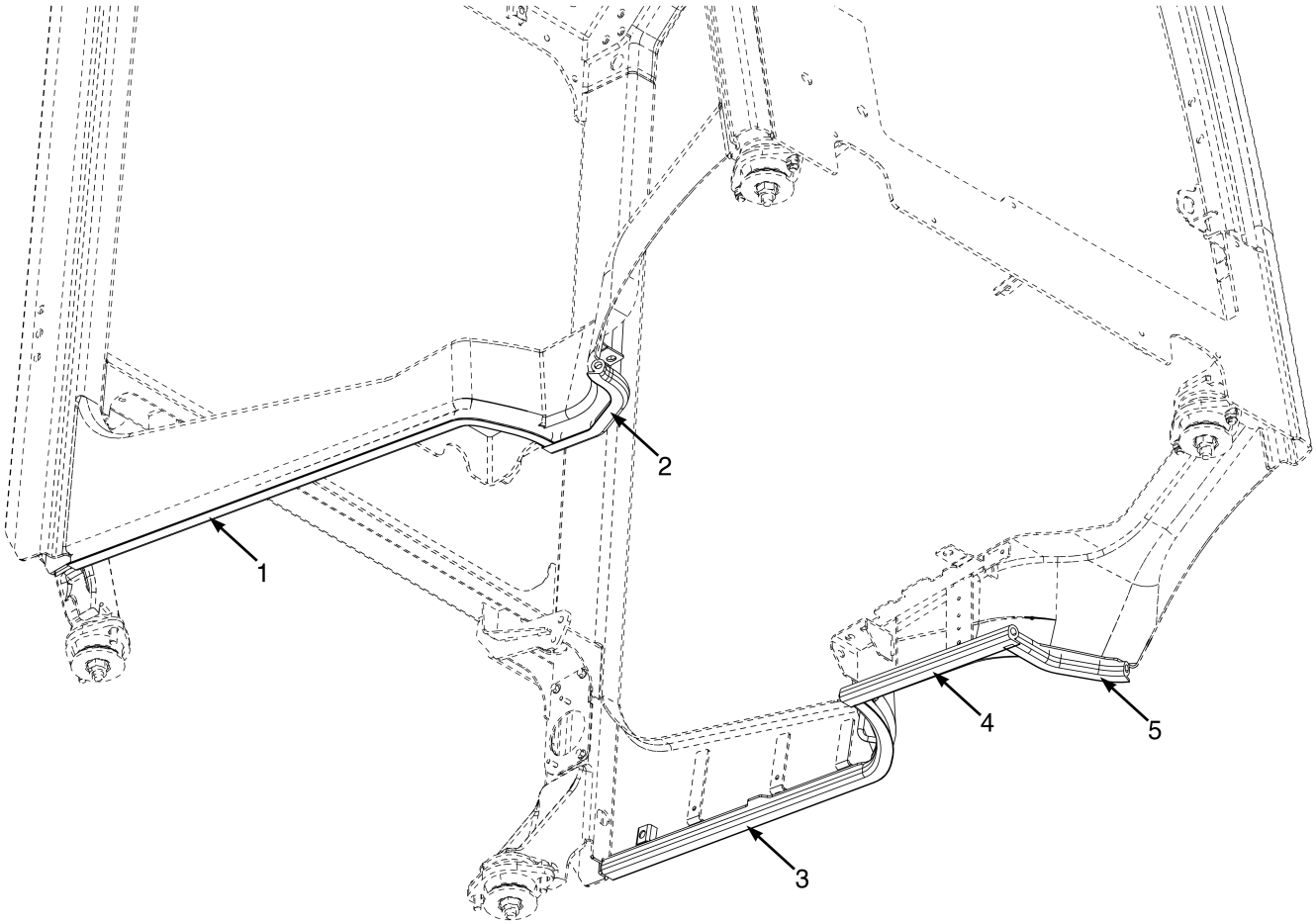

BP260234

KEY:
A: LPG Isolated
B: LPG Non Isolated
C: Diesel Isolated
D: Diesel Non Isolated

ITEM	PART NO.	DESCRIPTION	QTY A	QTY B	QTY C	QTY D
1	4212935	Seal	1	..	..	..
1	4284225	Seal	..	1	..	..
1	4212935	Seal	..	..	1	..
2	4305479	Seal	..	1	..	..
2	4311447	Seal	..	..	1	..
3	1595170	Seal-Bulk	1	..	..	..
3	4284223	Seal	..	1	..	..
3	. . . . .	Seal (Forward of Fuel Filler)	..	..	1	..
3	. . . . .	Seal (Rear of Fuel Filler)	..	..	1	..
3	4322989	Seal (Forward of Fuel Filler)	..	..	..	1
3	4322990	Seal (Rear of Fuel Filler)	..	..	..	1
4	4311525	Seal	1	..	..	..

KEY:
A: LPG Isolated
B: LPG Non Isolated
C: Diesel Isolated
D: Diesel Non Isolated

ITEM	PART NO.	DESCRIPTION	QTY A	QTY B	QTY C	QTY D
4	4305479	Seal	..	1	..	..
4	4311525	Seal	..	..	1	..
5	4311446	Seal	1	..	..	..
5	4311444	Seal	..	1	..	1
5	4311446	Seal	..	..	1	..

©2026 HYSTER COMPANY

NOISE ABATEMENT (FIGURE 1-65)

OHG AND FLOORPLATES

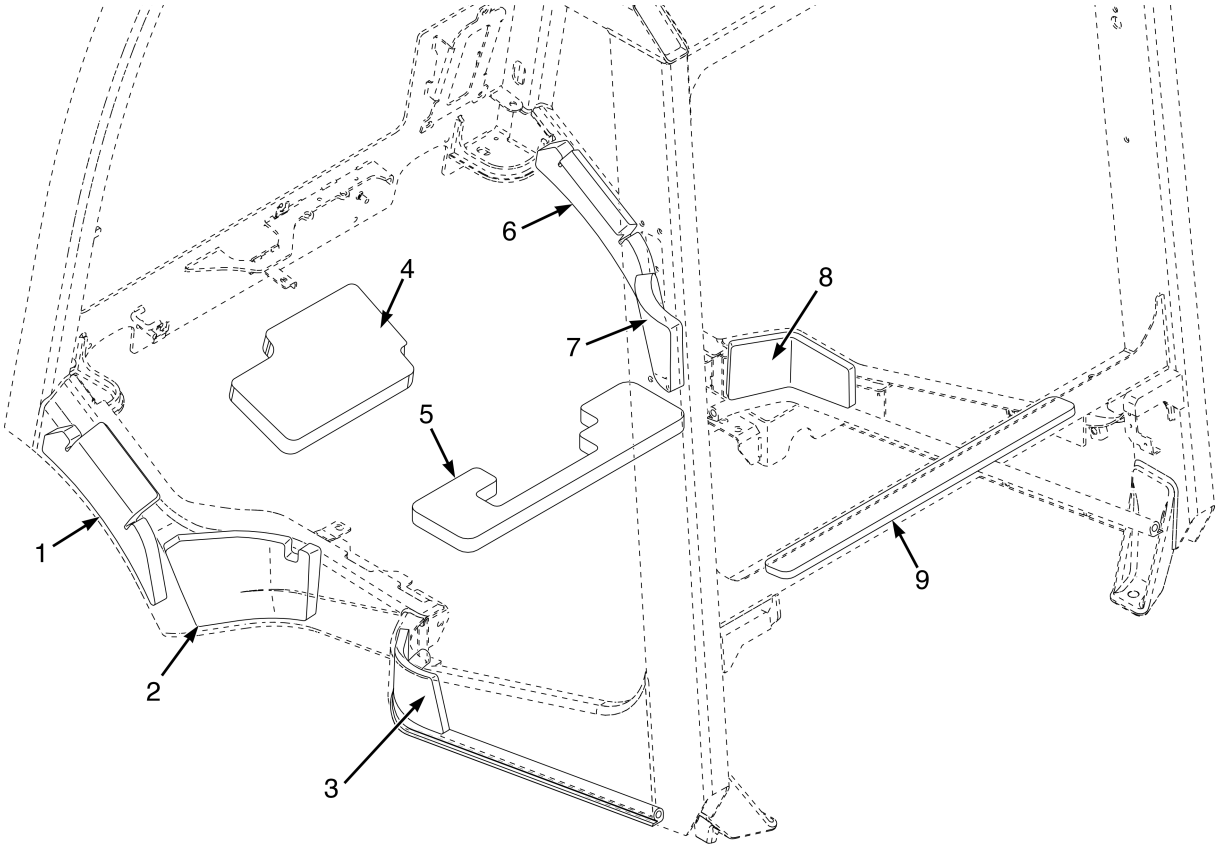

BP260179

ITEM	PART NO.	DESCRIPTION	QTY
1	4325485	Sound Liner (LH Front)	1
2	4325488	Sound Liner (LH Step)	1
3	4325672	Sound Liner (LH Rear)	1
4	~~4331447~~		
	4393047	Sound Liner (Front Floorplate)	1
5	4241562	Sound Liner (Floorplate)	1
6	4325486	Sound Liner (RH Front)	1
7	4325487	Sound Liner (RH Step)	1
8	4241559	Sound Liner (RH Rear)	1
9	4328404	Sound Liner (Radiator Fan Shroud)	1

NOTES

©2026 HYSTER COMPANY

2 AIR INLET SYSTEM

SECTION 2
AIR INLET SYSTEM

DESCRIPTION **PAGE**

AIR FILTER
ASSEMBLY - 2.1L (→ 3/2021) 2-4
ASSEMBLY - 2.1L (3/2021 →) 2-6
ASSEMBLY - 2.2L 2-10
ASSEMBLY - 3.0L AND 3.3L 2-14
AIR INLET
PRE-CLEANER AND DUCT 2-20
AIR INLET SYSTEM
2.2L 2-8
3.0L AND 3.3L 2-12
3.0L AND 3.3L - WITH AIR CONDITIONING 2-18
3.0L AND 3.3L DIESEL - WITH SILENCER 2-16
WITH SILENCER - 2.1L 2-2

©2026 HYSTER COMPANY

AIR INLET SYSTEM (FIGURE 2-1)
WITH SILENCER — 2.1L

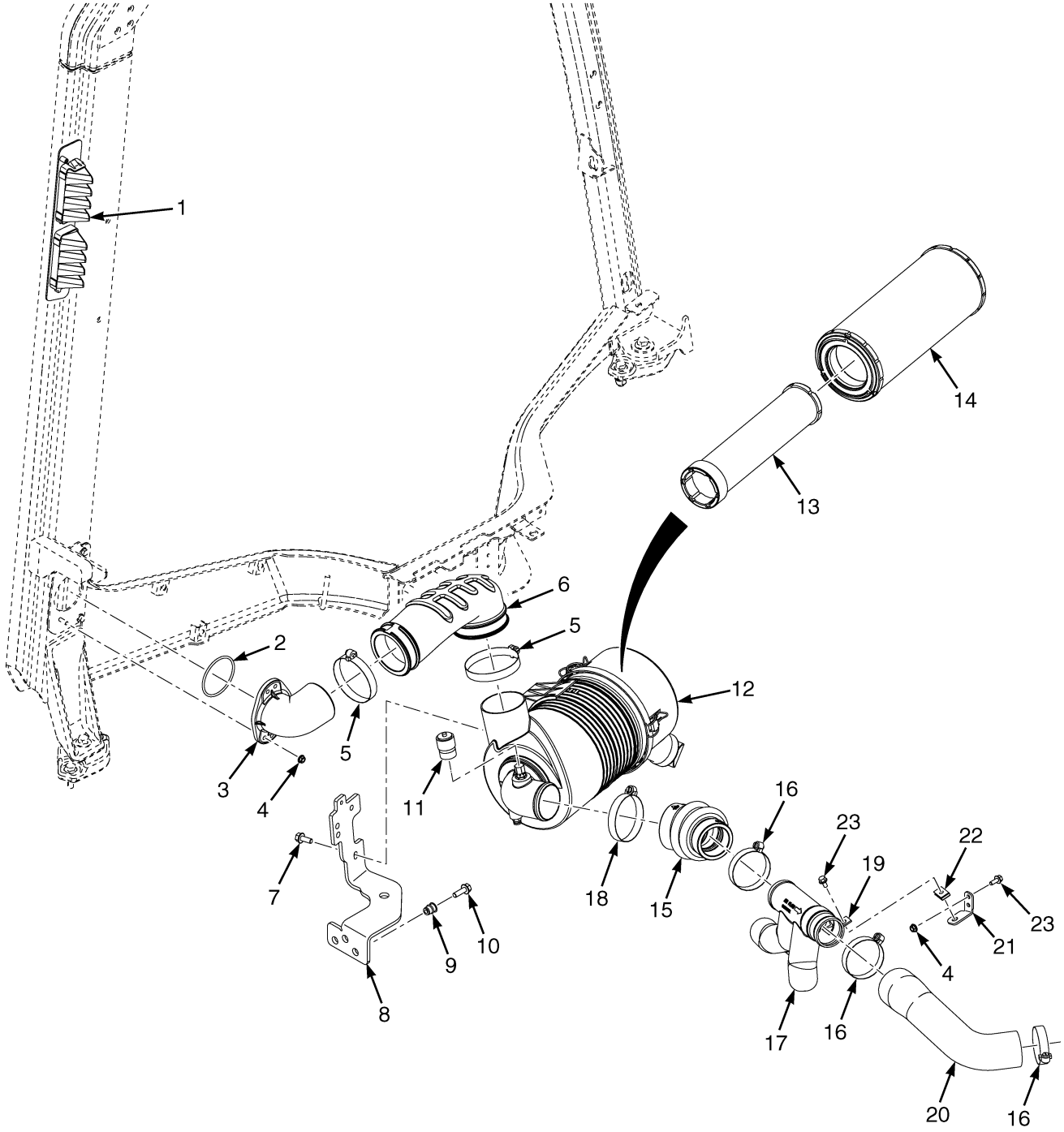

©2026 HYSTER COMPANY

AIR INLET SYSTEM
WITH SILENCER – 2.1L

ITEM	PART NO.	DESCRIPTION	QTY
1	4693771	Grille , Air Inlet	1
2	4247956	O-Ring	1
3	4673213	Elbow	1
4	~~1307884~~		
	1514429	Nut	4
5	115696	Hose Clamp	2
6	4673229	Hose	1
7	1527880	Capscrew	2
8	4245597	Bracket	1
9	1530243	Insert	3
10	1510113	Capscrew	3
11	165991	Indicator (Restriction)	1
11	4163723	Air Restriction Indicator (Electrical) (Optional)	1
12	4681657	Air Filter (Non UL) (☞Figure 2-2)	1
12	4710709	Air Filter (Non-UL) (Alternate Part) (☞Figure 2-3)	1
12	4672851	Air Filter (UL) (☞Figure 2-2)	1
12	4710710	Air Filter (UL) (Alternate Part) (☞Figure 2-3)	1
12	4672852	Air Filter (HD) (☞Figure 2-2)	1
12	4710711	Air Filter (HD) (Alternate Part) (☞Figure 2-3)	1
13	4695102	Filter Element (Non UL)	1
13	4636802	Filter Element (UL) and (HD)	1
14	4695092	Filter Element (Standard) (Non UL)	1
14	1462439	Filter Element (Standard) (UL)	1
14	4695091	Filter Element (HD)	1
15	4676793	Hose	1
16	112989	Hose Clamp	3
17	4676398	Silencer	1
18	~~1514728~~		
	1394008	Hose Clamp	1
19	4121575	Clamp	1
20	4673212	Hose	1
21	4270141	Bracket	1
22	1566420	Nut (Foldover)	1
23	~~4111055~~		
	1527876	Capscrew	3

©2026 HYSTER COMPANY

AIR FILTER (FIGURE 2-2)
ASSEMBLY — 2.1L (→ 3/2021)

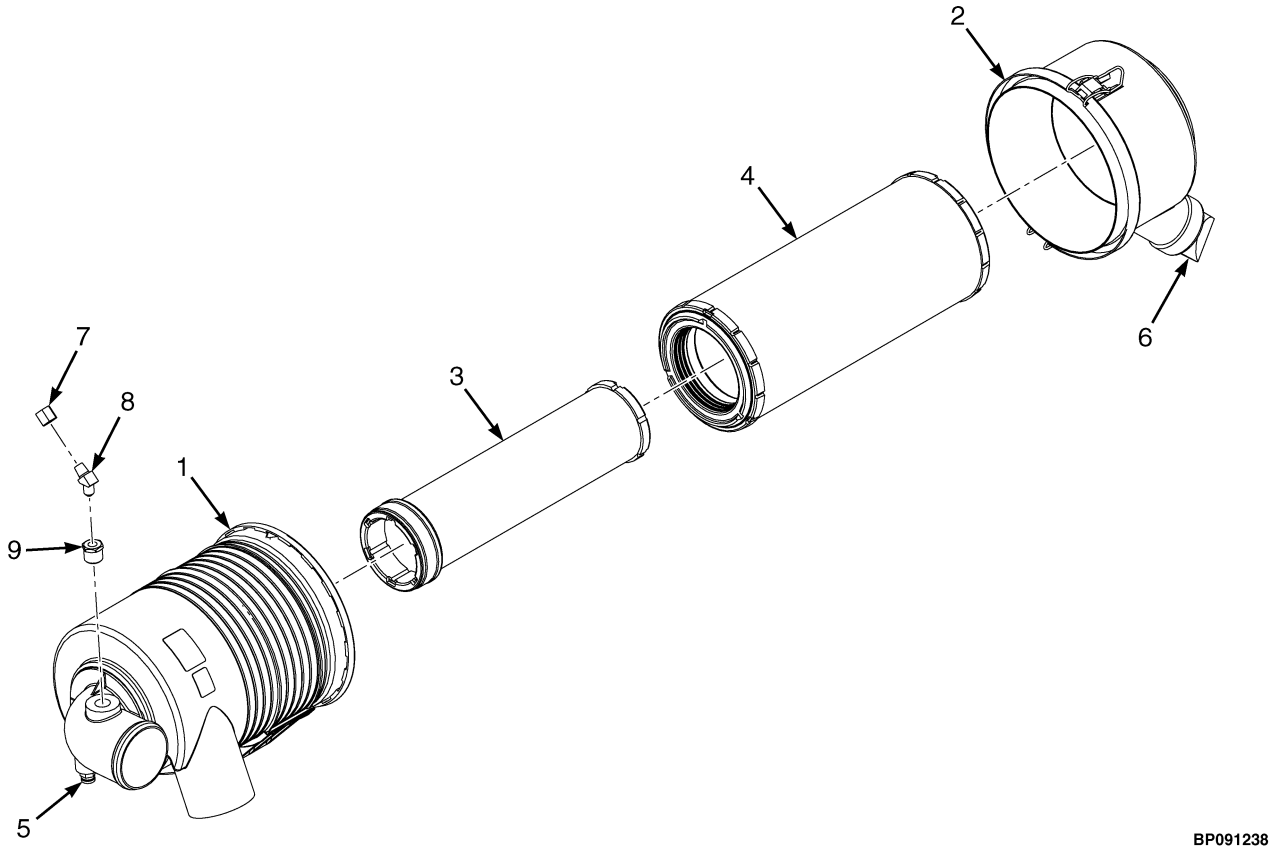

©2026 HYSTER COMPANY

AIR FILTER

ASSEMBLY – 2.1L (→ 3/2021)

KEY:
A: Standard Non-UL
B: Standard UL
C: Heavy Duty

ITEM	PART NO.	DESCRIPTION	QTY A	QTY B	QTY C
	4681657	Air Filter (Non UL)	1	..	..
	4672851	Air Filter (UL)	..	1	..
	4672852	Air Filter (HD)	..	..	1
1	. . . . .	Body	1	1	1
2	4303261	Cover	1	..	..
2	1462441	Cover	..	1	1
3	4695102	Filter Element	1	..	..
3	4636802	Filter Element	..	1	1
4	4695092	Filter Element (Standard)	1	..	..
4	1462439	Filter Element	..	1	..
4	4695091	Filter Element	..	..	1
5	1462442	Plug	1	1	1
6	374923	Valve	1	1	1
7	141331	Cap	1	1	1
8	4303041	Adapter	1	1	1
9	4303042	Bushing , Reducer	1	1	1

©2026 HYSTER COMPANY

AIR FILTER (FIGURE 2-3)

ASSEMBLY — 2.1L (3/2021 →)

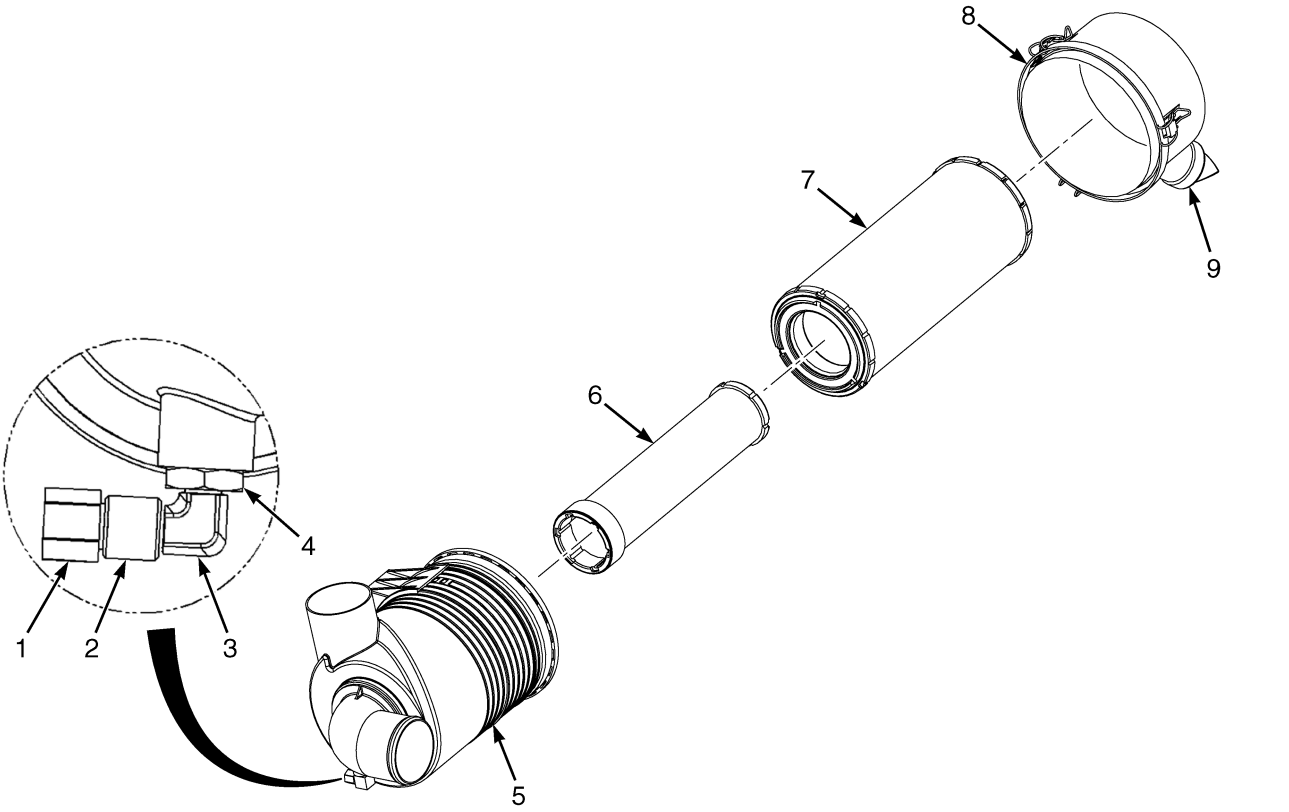

©2026 HYSTER COMPANY

AIR FILTER

ASSEMBLY – 2.1L (3/2021 →)

KEY:
A: Standard Non-UL
B: Standard UL
C: Heavy Duty

ITEM	PART NO.	DESCRIPTION	QTY A	QTY B	QTY C
	4710709	Air Filter (Non-UL)	1	..	..
	4710710	Air Filter (UL)	..	1	..
	4710711	Air Filter (HD)	..	..	1
1	141331	Cap	1	1	1
2	4340565	Adapter (Restriction)	1	1	1
3	4340567	Elbow	1	1	1
4	4303039	Locknut	1	1	1
5	. . . . .	Body	1	1	1
6	4695102	Filter Element	1	..	..
6	4636802	Filter Element	..	1	1
7	4695092	Filter Element (Standard)	1	..	..
7	1462439	Filter Element	..	1	..
7	4695091	Filter Element	..	..	1
8	4303261	Cover	1	..	..
8	1462441	Cover	..	1	1
9	374923	Valve	1	1	1

©2026 HYSTER COMPANY

AIR INLET SYSTEM (FIGURE 2-4)

2.2L

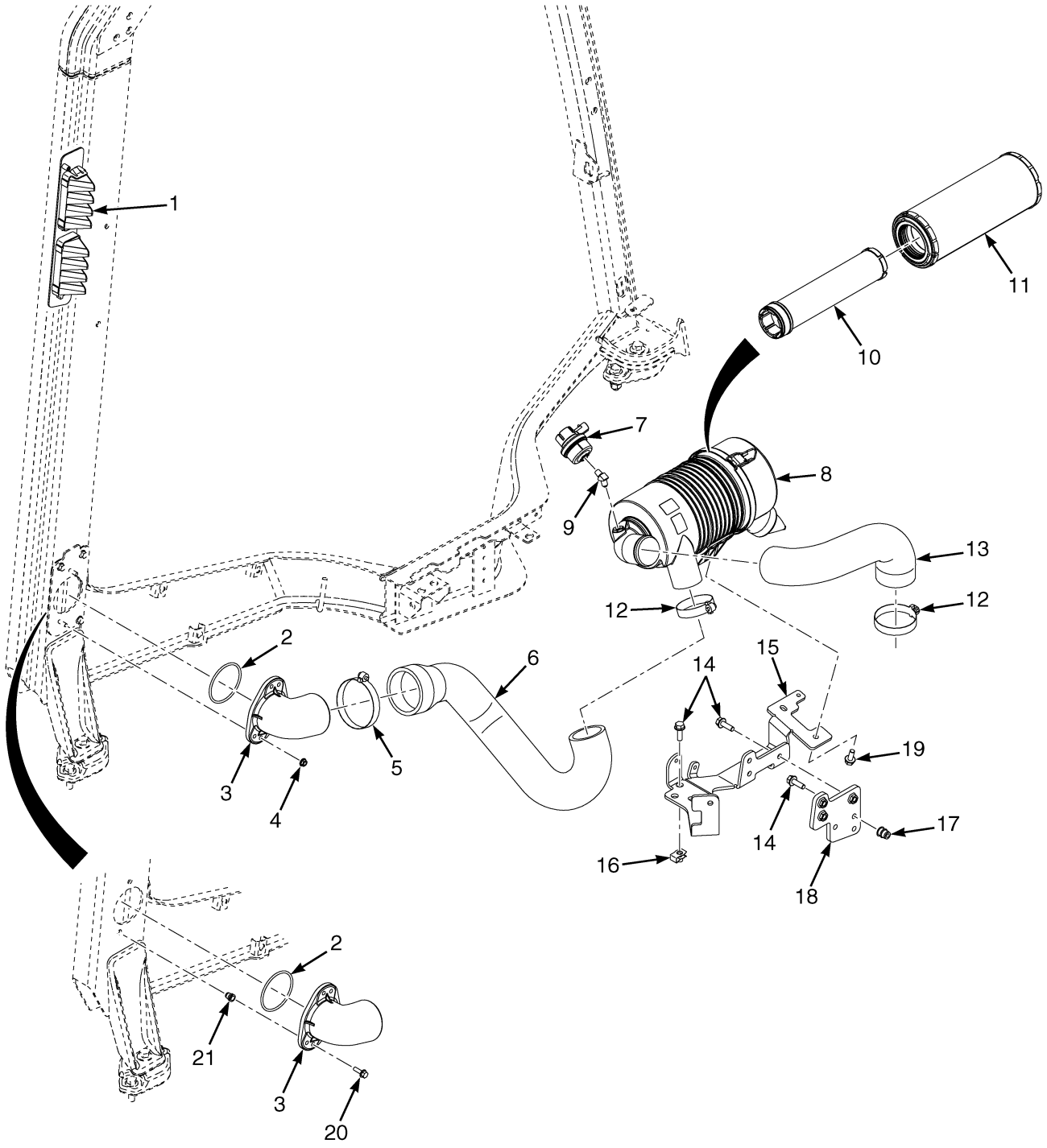

©2026 HYSTER COMPANY

AIR INLET SYSTEM
2.2L

ITEM	PART NO.	DESCRIPTION	QTY
1	4693771	Grille , Air Inlet	1
2	4247956	O-Ring	1
3	4673213	Elbow	1
4	**a** ~~1307884~~		
	1514429	Nut	2
5	115696	Hose Clamp	1
6	4673206	Hose	1
7	165991	Indicator (Restriction)	1
7	4163723	Air Restriction Indicator (Electrical) (Optional)	1
8	4681655	Air Filter (Std Non UL)	1
8	4672822	Air Filter (Std UL)	1
8	4672821	Air Filter (HD)	1
9	4303033	Elbow	1
10	~~4303257~~		
	4643002	Filter Element (Std Non UL)	1
10	~~4303038~~		
	4643000	Filter Element (Std UL) and HD)	1
11	~~4303256~~		
	4643001	Filter Element (Std Non UL)	1
11	4303040	Air Filter (Element) (Std UL)	1
11	4642999	Filter Element (Alternate Part)	1
11	4694864	Filter Element (HD)	1
12	112989	Hose Clamp	3
13	4673203	Hose	1
14	1510113	Capscrew	7
15	4245595	Bracket	1
16	1398062	Nut (Fold Over)	1
17	1530243	Insert	3
18	4253293	Bracket Wldmt	1
19	1527880	Capscrew	2
20	**b** 1527877	Capscrew	2
21	**b** 1531558	Insert	2

FOOTNOTES:

a Fig8 OHG

b Rect OHG

©2026 HYSTER COMPANY

AIR FILTER (FIGURE 2-5)
ASSEMBLY — 2.2L

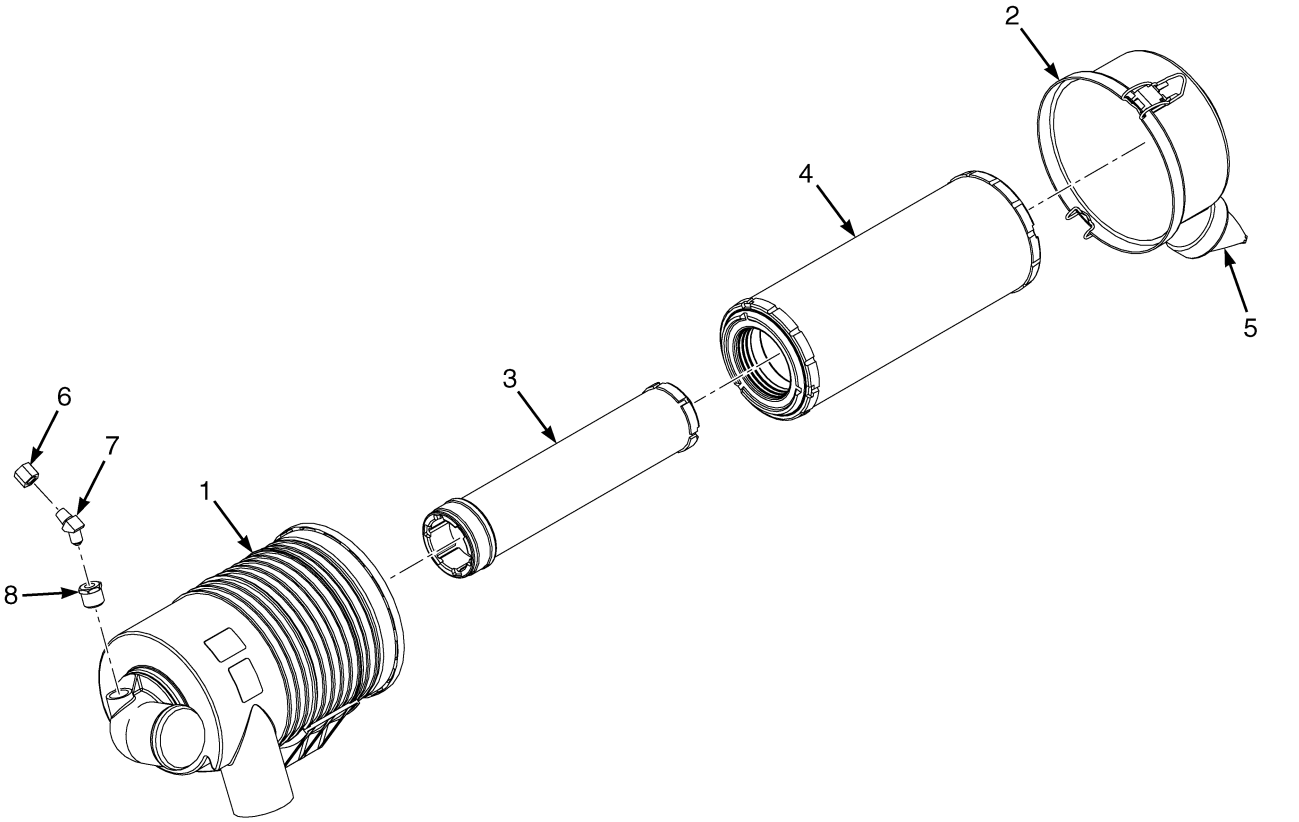

©2026 HYSTER COMPANY

AIR FILTER
ASSEMBLY – 2.2L

KEY:
A: Standard Non-UL
B: Standard UL
C: Heavy Duty

ITEM	PART NO.	DESCRIPTION	QTY A	QTY B	QTY C
	4681655	Air Filter	1	..	..
	4672822	Air Filter	..	1	..
	4672821	Air Filter	..	..	1
1	. . . . .	Body	1	1	1
2	4303254	Cover	1	..	..
2	4303035	Cover	..	1	1
3	~~4303257~~				
	4643002	Filter Element	1	..	..
3	~~4303038~~				
	4643000	Filter Element	..	1	1
4	~~4303256~~				
	4643001	Filter Element	1	..	..
4	4303040	Air Filter (Element)	..	1	..
4	4694864	Filter Element	..	..	1
4	4642999	Filter Element (Alternate Part)	..	1	..
5	4303034	Valve	1	1	1
6	141331	Cap	1	1	1
7	4303033	Elbow	1	1	1
8	4303039	Locknut	1	1	1

©2026 HYSTER COMPANY

AIR INLET SYSTEM (FIGURE 2-6)

3.0L AND 3.3L

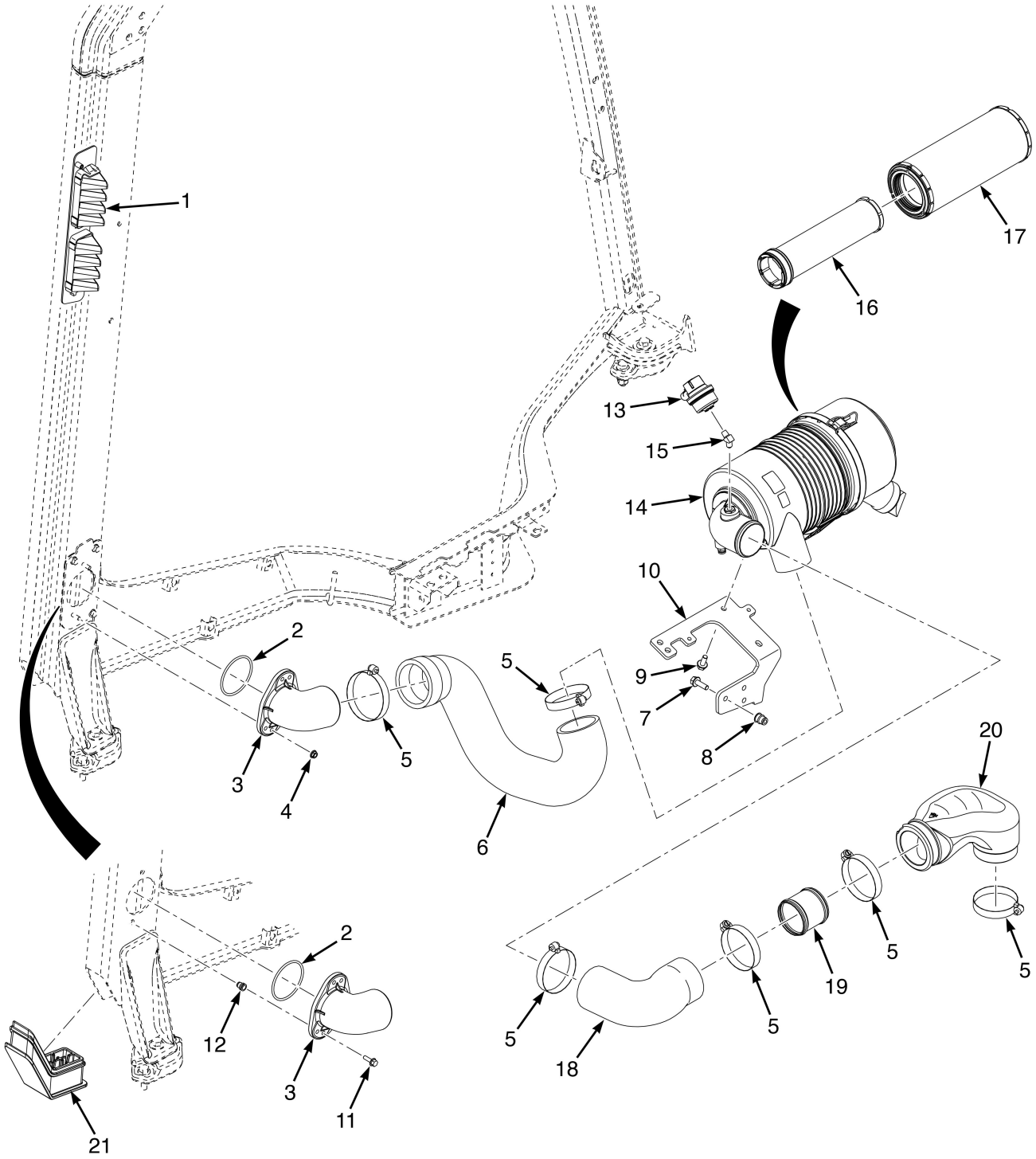

©2026 HYSTER COMPANY

AIR INLET SYSTEM
3.0L AND 3.3L

ITEM	PART NO.	DESCRIPTION	QTY
1	4693771	Grille , Air Inlet	1
2	4247956	O-Ring	1
3	4673213	Elbow	1
4	**a** ~~1307884~~		
	1514429	Nut	2
5	115696	Hose Clamp	6
6	4673210	Hose	1
7	1510113	Capscrew	3
8	1530243	Insert	3
9	1527880	Capscrew	2
10	4245596	Bracket	1
11	**b** 1527877	Capscrew	2
12	**b** 1531558	Insert	2
13	165991	Indicator (Restriction)	1
13	4163723	Air Restriction Indicator (Electrical) (Optional)	1
14	4681656	Air Filter (Assembly) (Std Non UL)	1
14	4672853	Air Filter (Assembly) (Std UL)	1
14	4672854	Air Filter (Assembly) (HD)	1
15	4303033	Elbow	1
16	~~4303260~~		
	4643005	Filter Element (Inner) (Std Non UL)	1
16	~~4303046~~		
	4643003	Filter Element (Std UL and HD)	1
17	~~4303259~~		
	4643494	Filter Element (Outer) (Std Non UL)	1
17	4303047	Air Filter (Element) (Std UL)	1
17	~~4303253~~		
	4661453	Filter Element (HD)	1
18	4673204	Hose	1
19	4682020	Tube	1
20	4674245	Elbow - Cobra Head Adapter	1
21	**b** 4716829	Plug	1

FOOTNOTES:

a Fig8 OHG

b Rect OHG

©2026 HYSTER COMPANY

AIR FILTER (FIGURE 2-7)
ASSEMBLY — 3.0L AND 3.3L

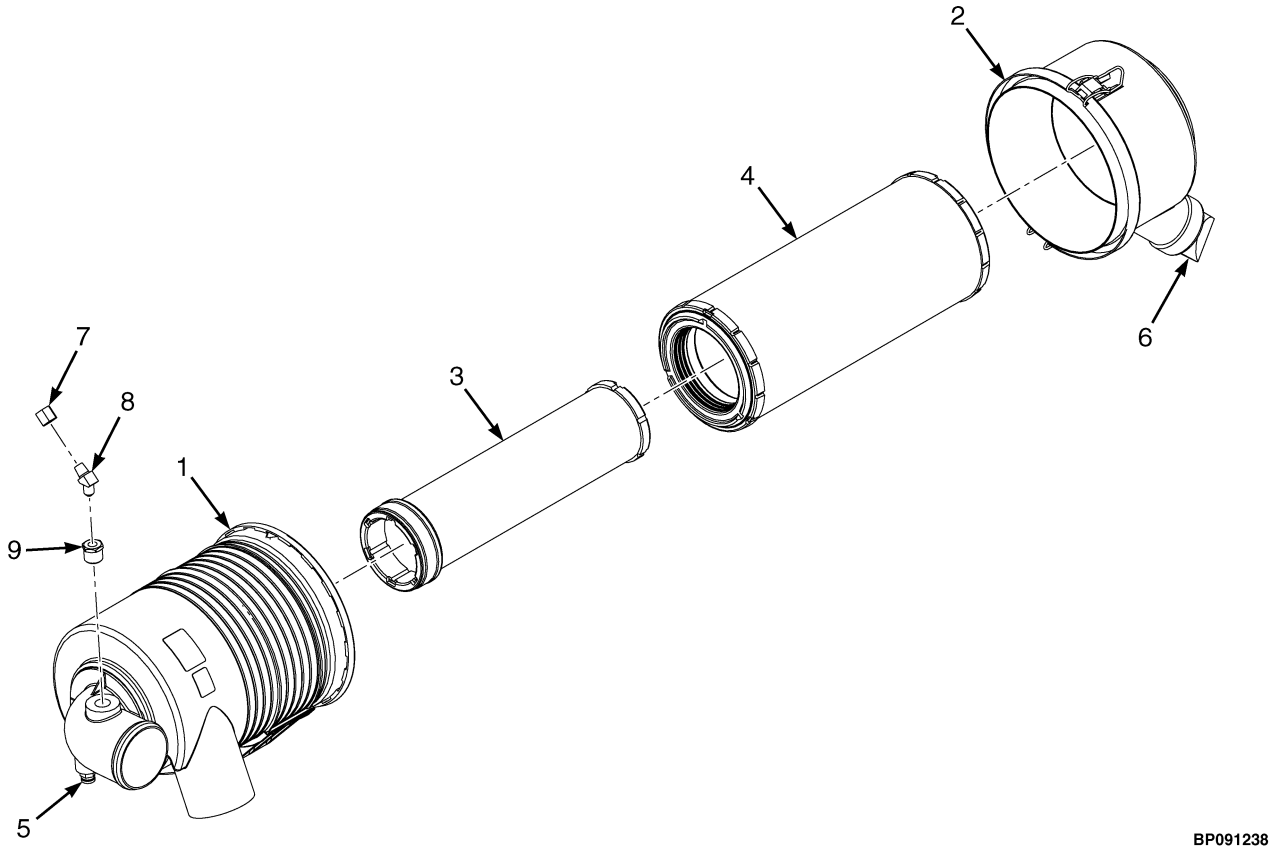

©2026 HYSTER COMPANY

AIR FILTER

ASSEMBLY – 3.0L AND 3.3L

KEY:
A: Standard Non-UL
B: Standard UL
C: Heavy Duty

ITEM	PART NO.	DESCRIPTION	QTY A	QTY B	QTY C
	4681656	Air Filter (Assembly)	1	..	..
	4672853	Air Filter (Assembly)	..	1	..
	4672854	Air Filter (Assembly)	..	..	1
1	4303258	Body	1	..	..
1	4303045	Body	..	1	1
2	4269581	Air Filter (Cover)	1	..	..
2	4303044	Cap (Cover)	..	1	..
2	~~4303252~~				
	4137007	Cover	..	..	1
3	~~4303260~~				
	4643005	Filter Element (Inner) (Inner)	1	..	..
3	~~4303046~~				
	4643003	Filter Element	..	1	1
4	~~4303259~~				
	4643494	Filter Element (Outer) (Outer)	1	..	..
4	4303047	Air Filter (Element)	..	1	..
4	~~4303253~~				
	4661453	Filter Element	..	..	1
5	1462442	Plug	1	1	1
6	4303034	Valve	1	..	..
6	374923	Valve	..	1	1
7	141331	Cap	1	1	1
8	4303033	Elbow	1	1	1
9	4303039	Locknut	1	1	1
9	4303042	Bushing , Reducer	1	1	1

©2026 HYSTER COMPANY

AIR INLET SYSTEM (FIGURE 2-8)
3.0L AND 3.3L DIESEL — WITH SILENCER

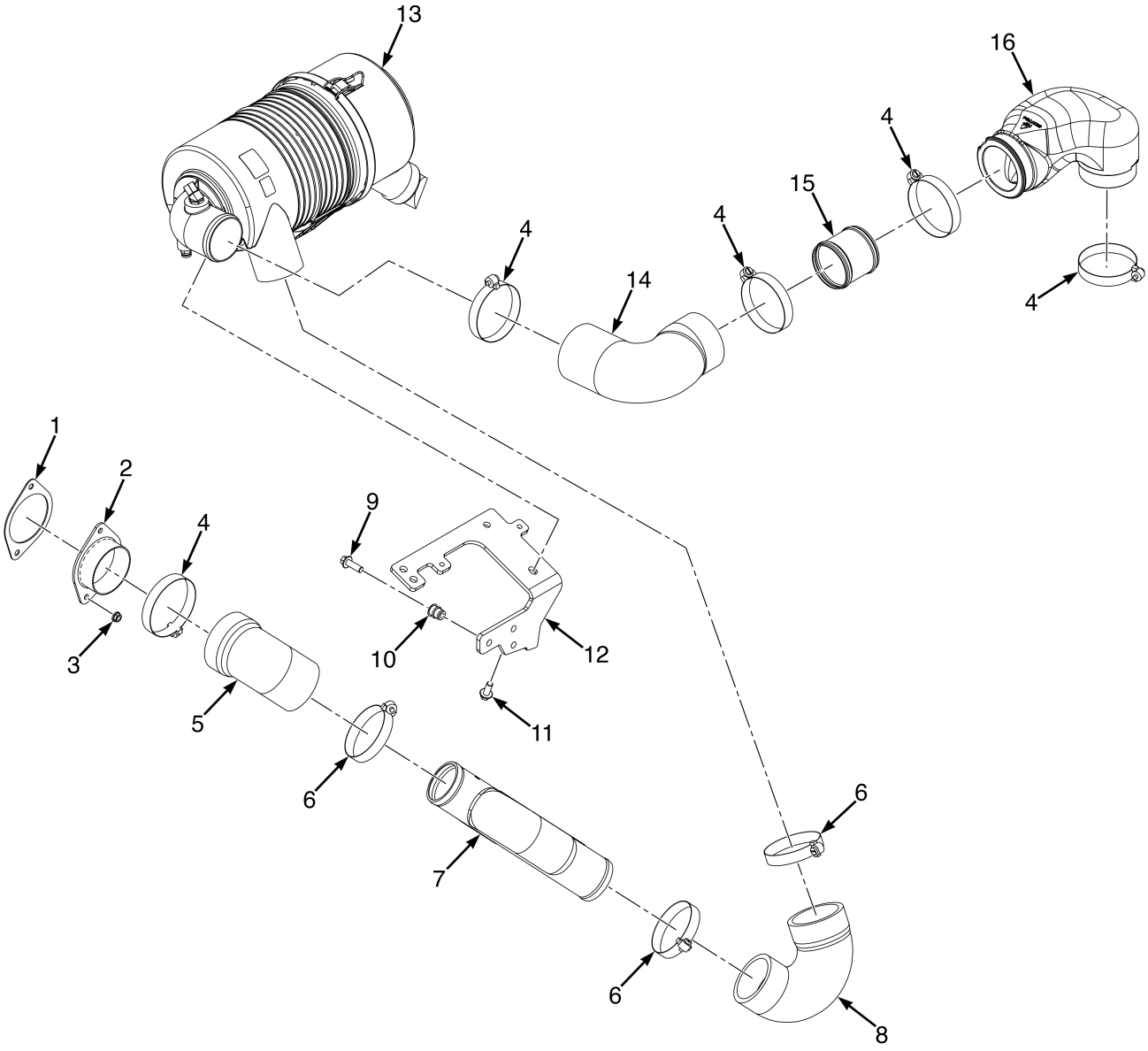

BP130957

©2026 HYSTER COMPANY

AIR INLET SYSTEM

3.0L AND 3.3L DIESEL – WITH SILENCER

ITEM	PART NO.	DESCRIPTION	QTY
1	**a** 4318428	Gasket (Air Intake)	1
1	**b** 4247956	O-Ring	1
2	4302420	Manifold (OHG Intake Hose)	1
2	4711831	Manifold	1
3	~~1307884~~		
	1514429	Nut	2
4	115696	Hose Clamp	5
5	4731449	Hose (Dirty Air)	1
6	~~1514728~~		
	1394008	Hose Clamp	3
7	4632455	Silencer	1
7	81004435	Silencer (Yanmar 3.0/3.3L) (Alternate Part)	1
8	4731450	Hose (Dirty Air)	1
9	1510113	Capscrew	3
10	1530243	Insert	3
11	1527880	Capscrew	2
12	4245596	Bracket	1
13	4681656	Air Filter (Assembly) (☞Figure 2-7)	1
14	4673204	Hose	1
15	4682020	Tube	1
16	4674245	Elbow - Cobra Head Adapter	1

FOOTNOTES:

a → 12/2025

b 12/2025 →

AIR INLET SYSTEM (FIGURE 2-9)
3.0L AND 3.3L — WITH AIR CONDITIONING

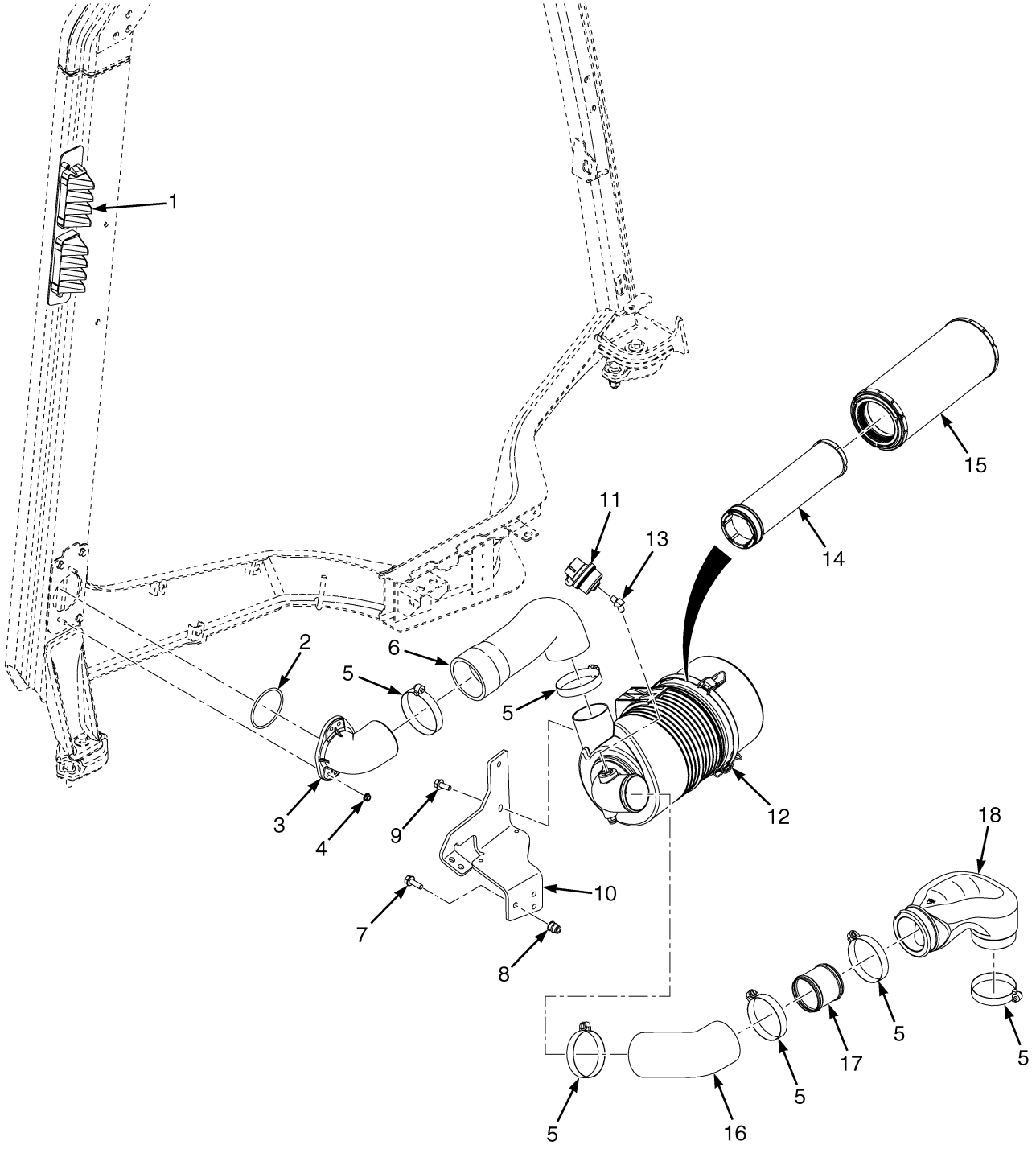

©2026 HYSTER COMPANY

AIR INLET SYSTEM

3.0L AND 3.3L – WITH AIR CONDITIONING

ITEM	PART NO.	DESCRIPTION	QTY
1	4693771	Grille , Air Inlet	1
2	4247956	O-Ring	1
3	4673213	Elbow	1
4	~~1307884~~		
	1514429	Nut	2
5	115696	Hose Clamp	6
6	4694654	Hose	1
7	1510113	Capscrew	3
8	1530243	Insert	3
9	1527880	Capscrew	2
10	4278101	Bracket	1
11	4163723	Air Restriction Indicator (Electrical)	1
12	4694652	Air Filter (HD)	1
13	17093	Fitting	1
14	~~4303046~~		
	4643003	Filter Element	1
15	~~4303253~~		
	4661453	Filter Element	1
16	4695886	Hose	1
17	4682020	Tube	1
18	4674245	Elbow - Cobra Head Adapter	1

©2026 HYSTER COMPANY

AIR INLET (FIGURE 2-10)
PRE-CLEANER AND DUCT

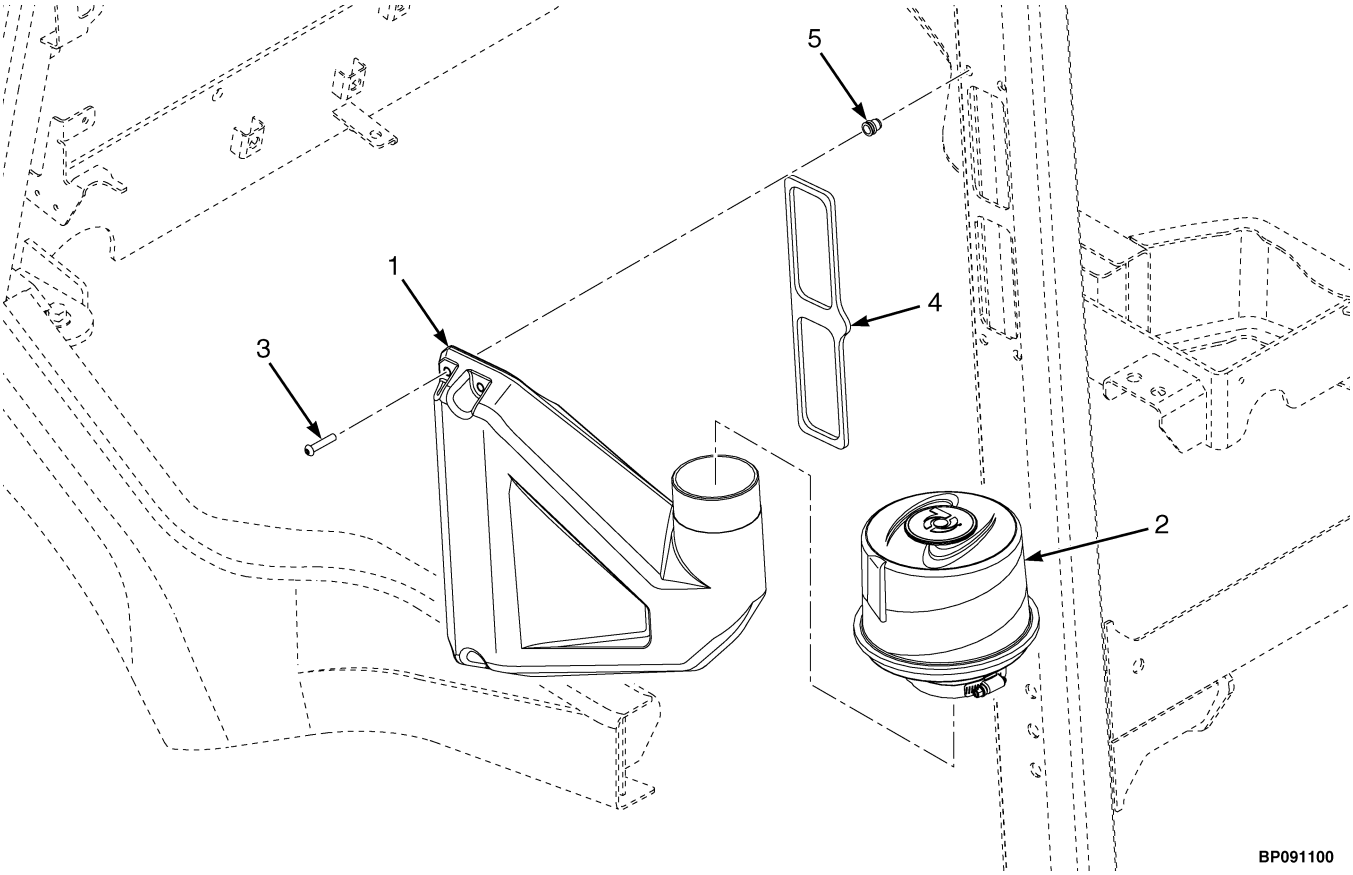

ITEM	PART NO.	DESCRIPTION	QTY
1	4265521	Air Duct	1
1	4273429	Air Duct (Low Exhaust)	1
2	1501888	Pre-Cleaner	1
2	4713029	Pre-Cleaner (2.1L w/ DOC)	1
3	4196033	Screw	4
4	4252576	Seal	1
5	1531558	Insert	4

©2026 HYSTER COMPANY

3 ENGINE ASSEMBLY - YANMAR 2.1L DIESEL

SECTION 3
ENGINE ASSEMBLY - YANMAR 2.1L DIESEL

DESCRIPTION	PAGE
ALTERNATOR	3-38
HIGH OUTPUT	3-40
CAMSHAFT AND IDLE GEAR	3-22
COOLING WATER SYSTEM	3-30
2.1L WITH CAC AND WTH DOC	3-32
CRANKSHAFT AND PISTON	3-24
CYLINDER BLOCK	3-4
CYLINDER HEAD AND COVER	3-10
DIESEL PARTICULATE FILTER	
2.1L WITH DOC	3-44
ELECTRICAL PARTS	3-42
ENGINE FUEL SYSTEM	3-34
ENGINE MOUNTING AND TORQUE CONVERTER	3-2
EXHAUST MANIFOLD	3-18
2.1L WITH CAC AND WTH DOC	3-20
FLYWHEEL HOUSING AND OIL SUMP	3-8
GEAR HOUSING	3-6
INTAKE MANIFOLD	3-14
2.1L WITH CAC AND WTH DOC	3-16
OIL PIPE	3-28
OIL PUMP AND ATTACHING PARTS	3-26
STARTER	3-36
TURBOCHARGER	
2.1L WITH DOC	3-46

©2026 HYSTER COMPANY

ENGINE MOUNTING AND TORQUE CONVERTER (FIGURE 3-1)

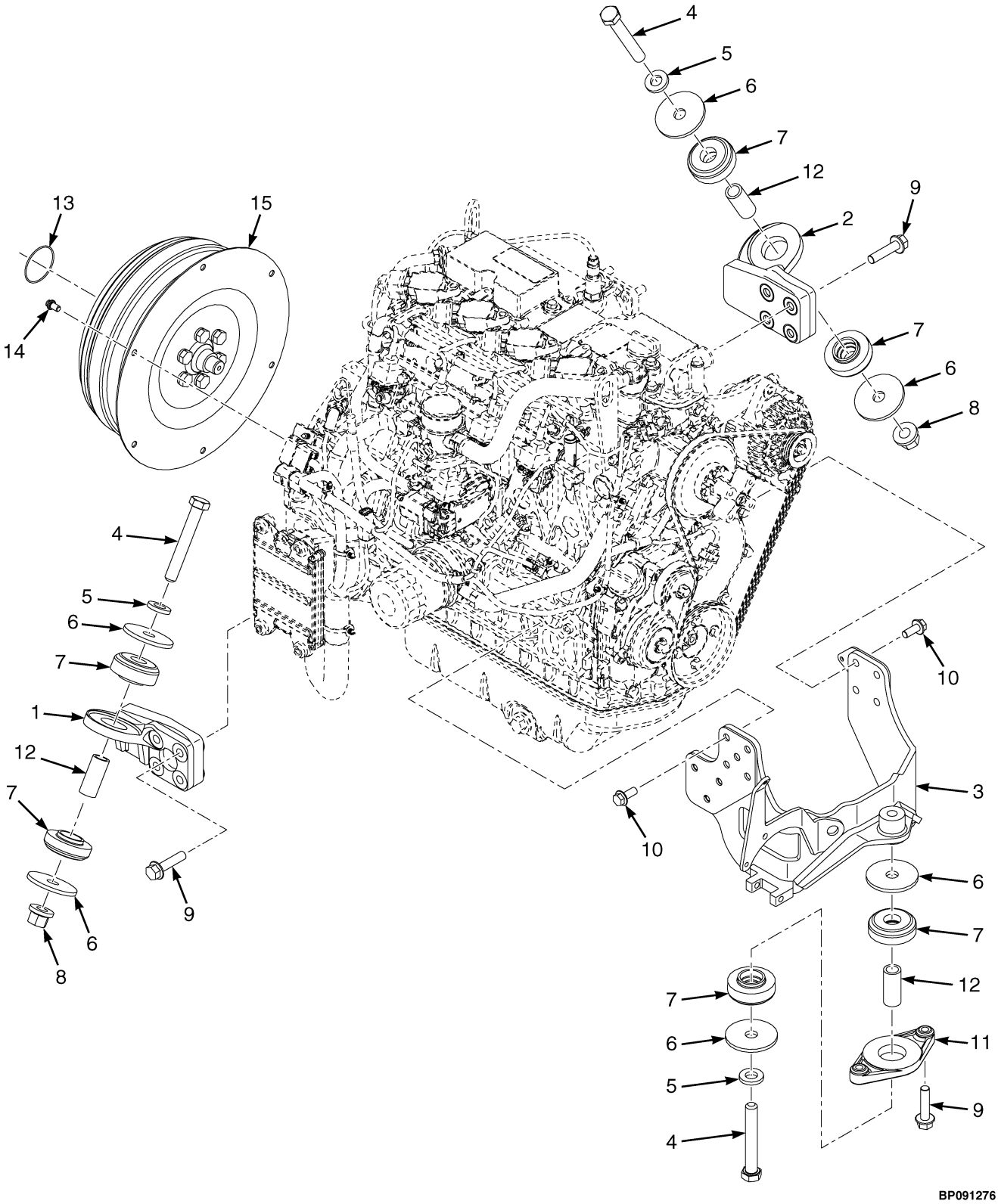

©2026 HYSTER COMPANY

ENGINE MOUNTING AND TORQUE CONVERTER

ITEM	PART NO.	DESCRIPTION	QTY
1	4307301	Motor Mount (LH)	1
2	4306703	Motor Mount (RH)	1
3	4307528	Motor Mount (Rear)	1
3	4307212	Motor Mount (Rear, w/ A/C)	1
4	293696	Capscrew	3
5	1504075	Washer	3
6	4306702	Washer	6
7	4328797	Isolator	6
8	1565453	Nut (Flange)	2
8	4328840	Nut (w/ retainer, engine mount) (Alternate Part)	2
9	1665557	Capscrew	10
10	4043636	Capscrew	8
11	4308533	Mount - Rear Adapter	1
12	4328796	Spacer	3
13	140465	O-Ring	1
14	4676480	Capscrew	6
15	4232917	Torque Converter	1

©2026 HYSTER COMPANY

CYLINDER BLOCK (FIGURE 3-2)

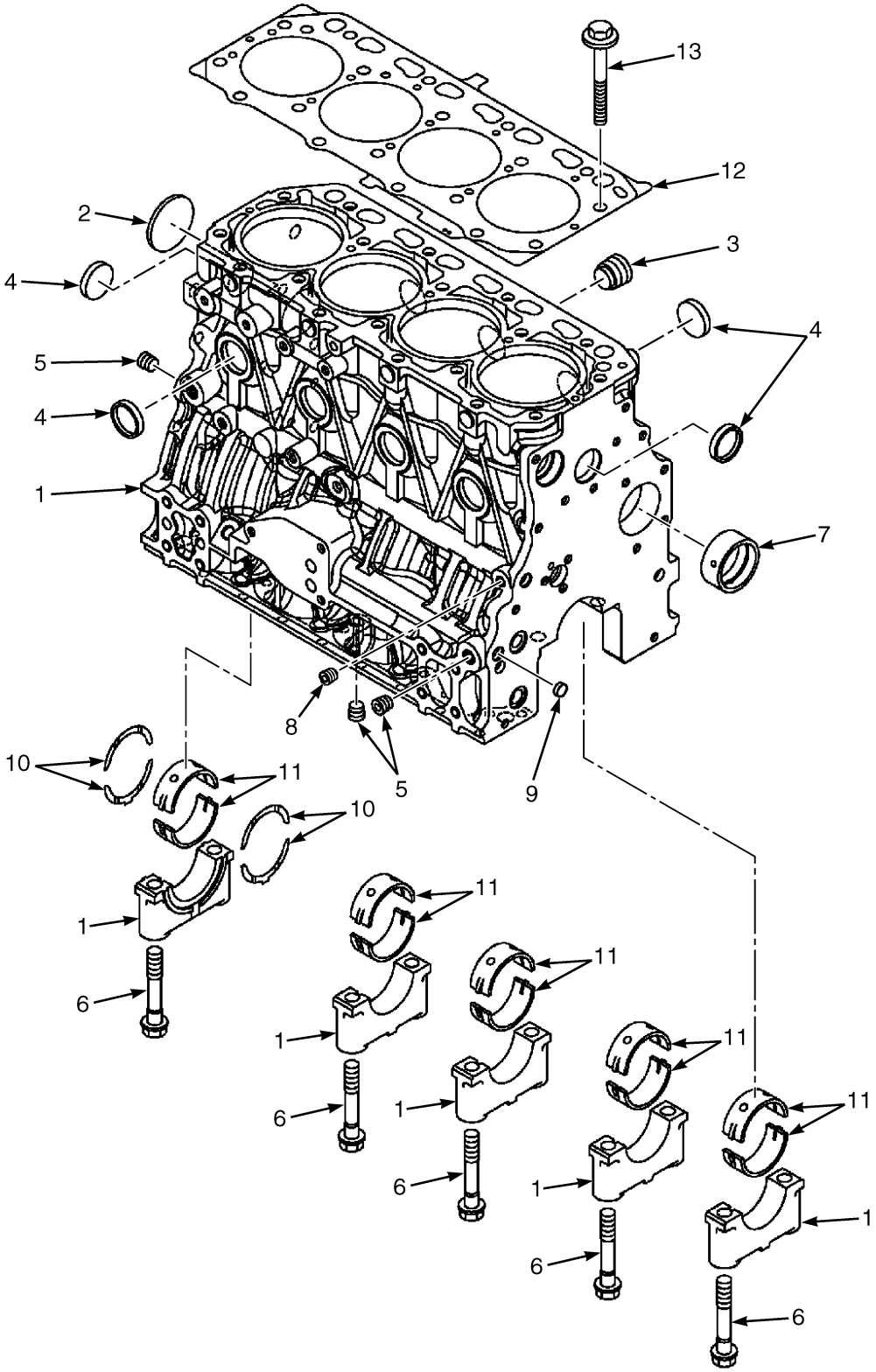

©2026 HYSTER COMPANY

CYLINDER BLOCK

ITEM	PART NO.	DESCRIPTION	QTY
	4667918	Engine Assy-Diesel (2.1L - w/CAC w/DPF)	1
	4667873	Engine Assy-Diesel (2.1L - w/DPF)	1
	4667872	Engine Assy-Diesel (2.1L - w/ CAC w/DOC)	1
	4303007	Cylinder Block	1
1	4380231	Cylinder Block (DOC)	1
2	4303008	Plug	1
3	1599442	Plug	1
4	4303011	Plug	8
5	4303013	Plug	3
6	4303009	Bolt	10
7	4303010	Bushing (Camshaft)	1
8	4303012	Plug	1
9	4303014	Plug	1
10	4303016	Thrust Bearing	2
10	4303020	Thrust Bearing (Oversized - 0.25) (Optional)	1
11	4303018	Bearing (Camshaft)	5
11	4303019	Bearing (Undersize - 0.25) (Optional)	5
11	4380233	Bearing (Camshaft) (DOC)	5
11	4380234	Bearing (Optional) (DOC)	5
12	4303017	Cylinder Head Gasket	1
12	4380232	Cylinder Head Gasket (DOC)	1
13	4303015	Bolt	18

©2026 HYSTER COMPANY

GEAR HOUSING (FIGURE 3-3)

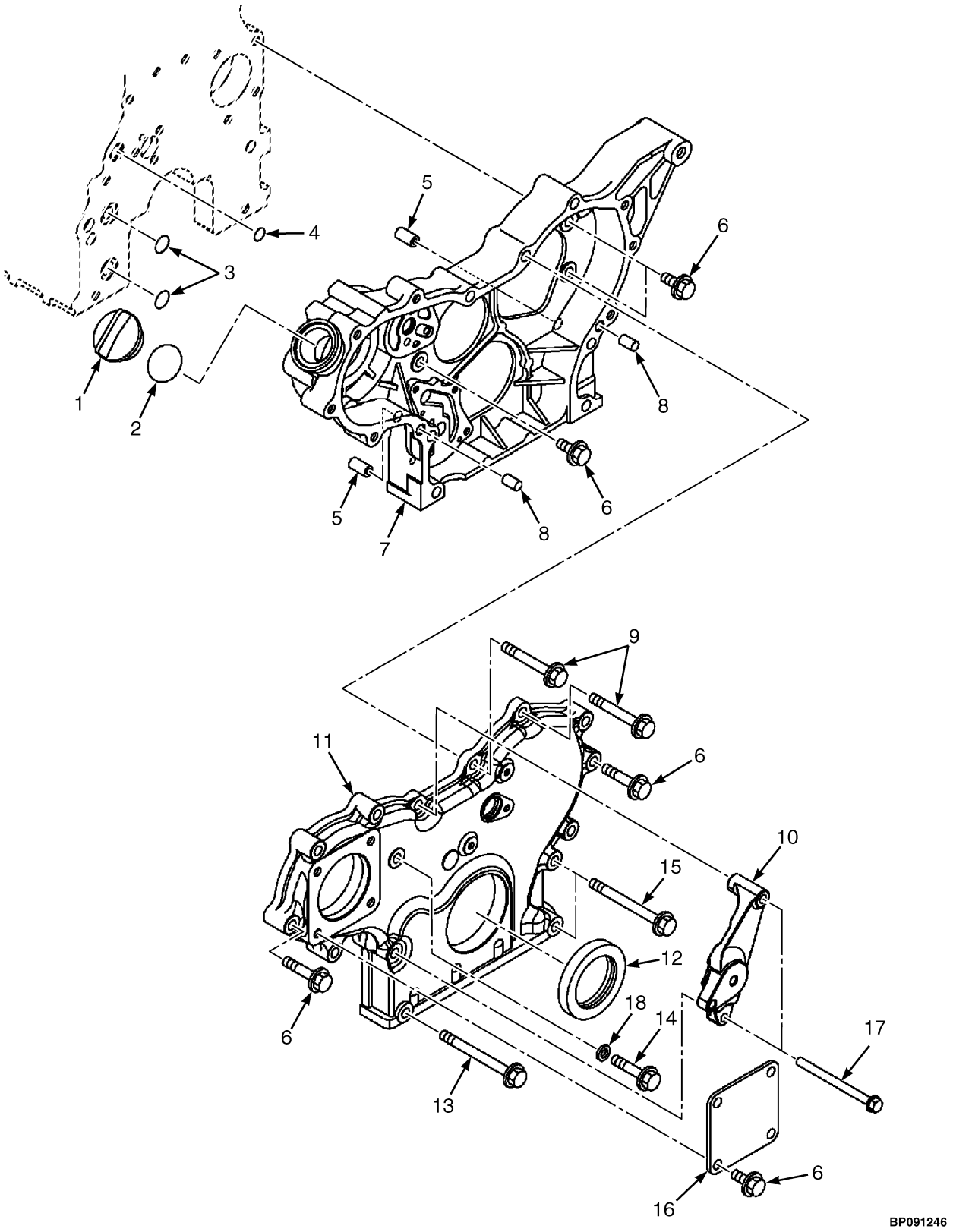

©2026 HYSTER COMPANY

GEAR HOUSING

ITEM	PART NO.	DESCRIPTION	QTY
	4667918	Engine Assy-Diesel (2.1L - w/CAC w/DPF)	1
	4667873	Engine Assy-Diesel (2.1L - w/DPF)	1
	4667872	Engine Assy-Diesel (2.1L - w/ CAC w/DOC)	1
1	1599463	Cap (Oil Fill)	1
2	1599464	O-Ring	1
3	4303023	O-Ring	2
4	4303024	O-Ring	1
5	4303022	Pipe (Knock)	1
6	1599470	Bolt	7
7	4303021	Case (Gear Case)	1
8	1599458	Pin	2
9	4122592	Bolt	2
10	4305108	Tensioner (Stay)	1
11	4303025	Case (Cover Assembly)	1
12	4303026	Seal (Oil Seal)	1
13	1599445	Washer	1
14	1719968	Bolt	1
15	1599473	Bolt	7
16	4303027	Cover (Hydraulic Pump)	1
17	4303236	Bolt	2
18	4680489	Bolt	3

©2026 HYSTER COMPANY

FLYWHEEL HOUSING AND OIL SUMP (FIGURE 3-4)

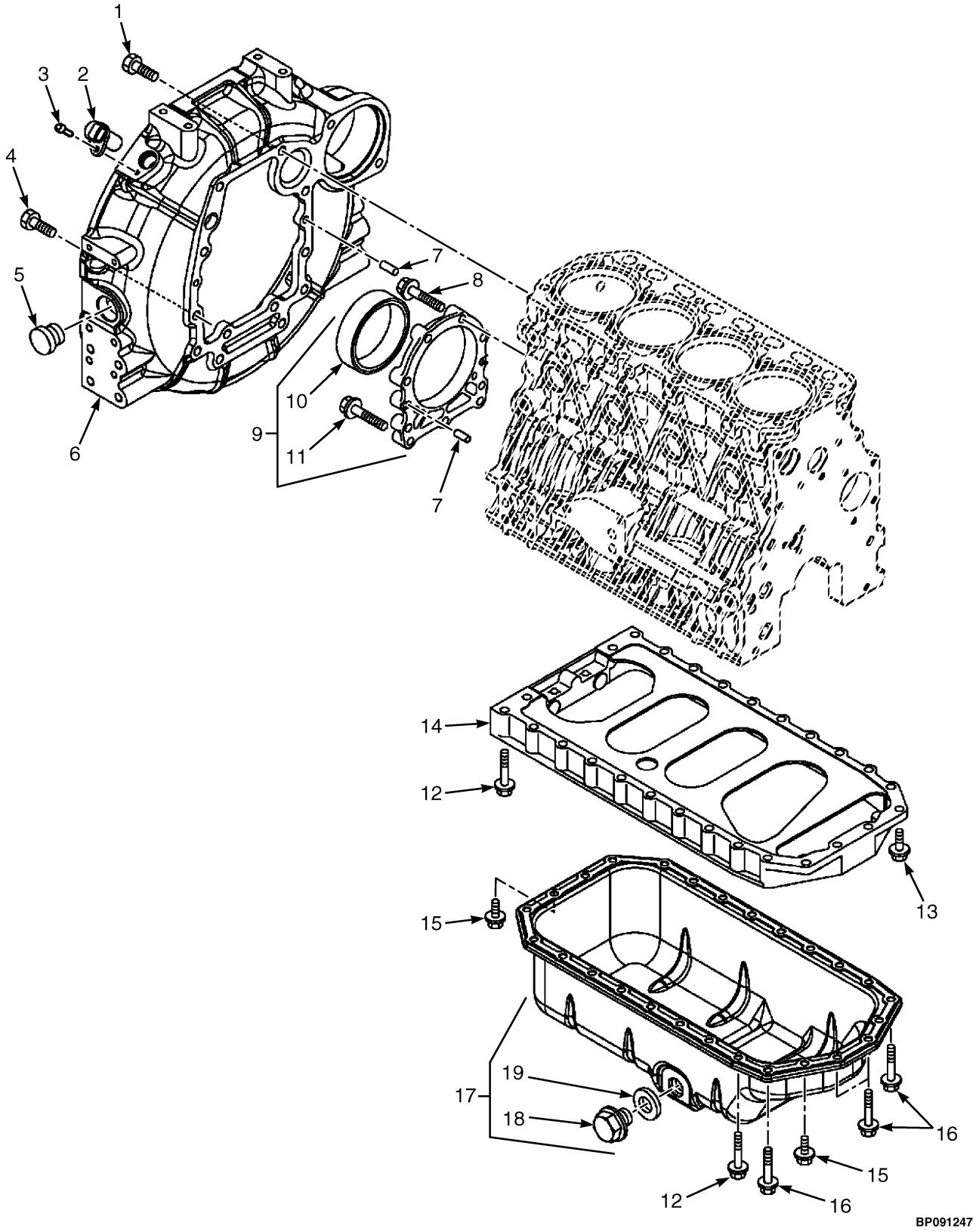

©2026 HYSTER COMPANY

FLYWHEEL HOUSING AND OIL SUMP

ITEM	PART NO.	DESCRIPTION	QTY
	4667918	Engine Assy-Diesel (2.1L - w/CAC w/DPF)	1
	4667873	Engine Assy-Diesel (2.1L - w/DPF)	1
	4667872	Engine Assy-Diesel (2.1L - w/ CAC w/DOC)	1
1	2084313	Bolt	6
2	4304618	Sensor (Flywheel)	1
3	4304499	Bolt	1
4	4303248	Bolt	4
5	4303247	Cap (Wheel Cover)	1
6	4305042	Housing (Flywheel)	1
7	1599458	Pin	4
8	1599485	Bolt	6
9	4303249	Case (Oil Seal Case Assembly)	1
10	4304448	Seal	1
11	1719968	Bolt	3
12	1599475	Bolt	20
13	1599801	Bolt	2
14	4304845	Spacer (Oil Pan)	1
15	1599470	Bolt	4
16	4304488	Bolt	4
17	4304865	Oil Pan	1
18	1599480	Drain Plug	1
19	1599481	Oil Seal	1

©2026 HYSTER COMPANY

CYLINDER HEAD AND COVER (FIGURE 3-5)

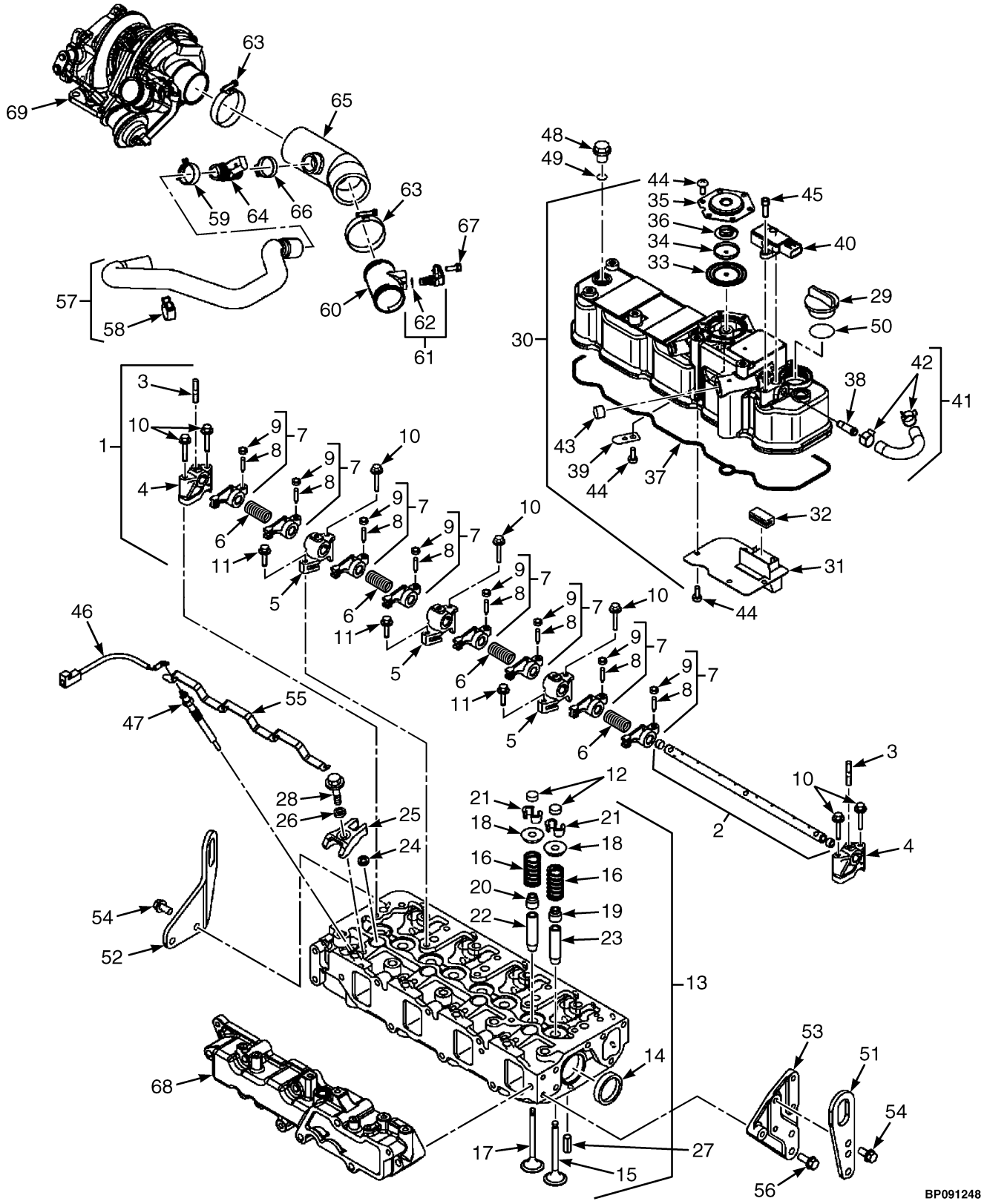

©2026 HYSTER COMPANY

CYLINDER HEAD AND COVER

ITEM	PART NO.	DESCRIPTION	QTY
	4667918	Engine Assy-Diesel (2.1L - w/CAC w/DPF)	1
	4667873	Engine Assy-Diesel (2.1L - w/DPF)	1
	4667872	Engine Assy-Diesel (2.1L - w/ CAC w/DOC)	1
1	4304858	Rocker Shaft (Assembly)	1
2	4304859	Rocker Arm (Shaft)	1
3	4305161	Stud	3
4	4304639	Support (Rocker Arm)	2
5	4304640	Support (Rocker Arm)	3
6	4304478	Spring (Shaft)	4
7	4304805	Rocker Arm (Assembly)	8
8	1599536	Screw	8
9	1599537	Nut	8
10	4304488	Bolt	7
11	1599801	Bolt	3
12	1599521	Cap	8
13	4305083	Cylinder Head (Assembly)	1
14	1599528	Plug	2
15	4304806	Valve (Intake)	4
15	4367982	Valve (Intake) (Alternate Part)	4
16	4304873	Spring (Valve)	8
16	4367983	Spring (Valve) (Alternate Part)	8
17	4304813	Exhaust Valve (Exhaust Valve)	4
18	1599518	Retainer	8
19	1599520	Seal (Intake Valve)	4
20	4304889	Seal (Valve Stem)	4
21	1599529	Retainer	8
22	1599525	Guide	4
23	4304646	Valve (Guide)	4
24	4304885	Gasket (Injector)	4
25	4304890	Retainer (Injector)	4
26	4304647	Washer (Injector)	4
27	1599446	Pin 6x12	2
28	1719968	Bolt	4
29	1599463	Cap (Oil Fill)	1
30	4305059	Hood (Head Hood Assembly)	1
30	4380235	Hood (Head Hood Assembly) (DOC)	1
30	**a** 4380238	Pressure Transducer (Exhaust)	1
31	4304804	Plate (Baffle)	1
32	4304815	Baffle (Breather)	1
33	4122435	Diaphragm	1
34	4122436	Plate	1
35	4122437	Plate (Breather)	1
36	4122438	Spring	1
37	4305043	Gasket	1
38	4304888	Joint	1
39	4304809	Spring	1
40	4304886	Sensor (Pressure)	1
40	4380236	Pressure Transducer (Intake) (DOC)	1
41	4304899	Hose (Pressure Hose)	1
41	4380237	Hose Assy (Pressure) (DOC)	1
42	4304900	Clip	2

CYLINDER HEAD AND COVER

ITEM	PART NO.	DESCRIPTION	QTY
43	4122419	Plug	1
44	1599548	Screw	11
45	4304499	Bolt	2
46	4304645	Wire Harness	1
47	~~4304808~~		
	4367999	Plug (Glow Plug)	4
48	1599544	Plug	3
49	1599550	O-Ring	3
50	1599464	O-Ring	1
51	4304635	Valve Lifter	1
52	4305081	Valve Lifter	1
53	4305082	Spacer (Valve Lifter)	1
54	1599470	Bolt	4
55	4305057	Connector (Glow Plug)	1
56	1599471	Bolt	2
57	4305079	Hose (Breather Hose)	1
58	4304503	Clamp	1
59	4304882	Clip	1
60	4304884	Joint (Breather)	1
61	4304891	Sensor (Temperature)	1
62	4304893	O-Ring (Temperature Sensor)	1
63	4305144	Clamp	2
64	4305041	Heater (Pipe) (excludes DOC engine)	1
65	4305078	Joint (Breather) (excludes DOC engine)	1
66	4304883	Clip (excludes DOC engine)	1
67	4122584	Bolt	1
68	. . . . .	Intake Manifold	1
69	. . . . .	Turbocharger	1

FOOTNOTES:

a Not Illustrated

See Service Manual for service procedures.
©2026 HYSTER COMPANY

NOTES

INTAKE MANIFOLD (FIGURE 3-6)

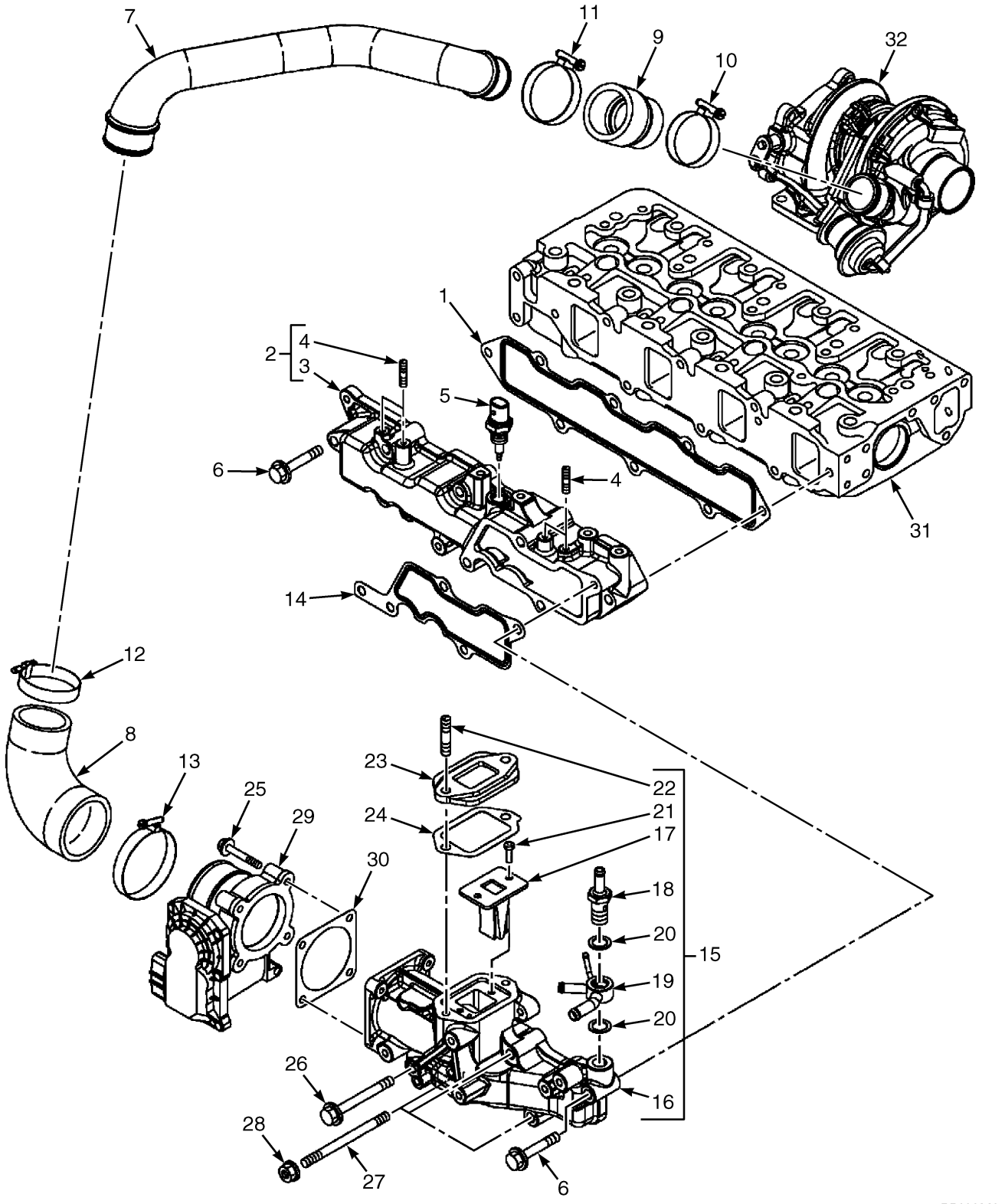

©2026 HYSTER COMPANY

INTAKE MANIFOLD

ITEM	PART NO.	DESCRIPTION	QTY
	4667918	Engine Assy-Diesel (2.1L - w/CAC w/DPF)	1
	4667873	Engine Assy-Diesel (2.1L - w/DPF)	1
1	4305044	Gasket	1
2	4305061	Intake Manifold (Assembly)	1
3	4305060	Intake Manifold	1
4	4305158	Stud	4
5	4304892	Sensor (Air Temperature)	1
6	4304488	Bolt	6
7	**a** 4305101	Air Duct	1
8	**a** 4305033	Joint (Rubber)	1
9	**a** 4305069	Joint (Rubber)	1
10	**a** 4305142	Clamp , 48	1
11	**a** 4305143	Clamp , 54	1
12	**a** 4305144	Clamp , 60	1
13	**a** 4305145	Clamp , 75	1
14	4304894	Gasket	1
15	4305031	Exhaust After Treatment Unit (Assembly)	1
16	4305030	Exhaust After Treatment Unit	1
17	4305063	Valve	1
18	4305021	Joint (Hose)	1
19	4305022	Joint (Hose)	1
20	4305137	Washer	2
21	4305140	Screw	2
22	4305159	Stud	2
23	4304903	Spacer (EGR Valve)	1
24	4304904	Gasket (EGR-V Spacer)	1
25	4122588	Bolt	4
26	4122593	Bolt	1
27	4305160	Stud	3
28	2068378	Nut	3
29	4304895	Throttle Body	1
30	4304896	Gasket	1
31	. . . . .	Cylinder Head	1
32	. . . . .	Turbocharger	1

FOOTNOTES:

a (w/ DPF Only, no CAC)

INTAKE MANIFOLD (FIGURE 3-7)
2.1L WITH CAC AND WTH DOC

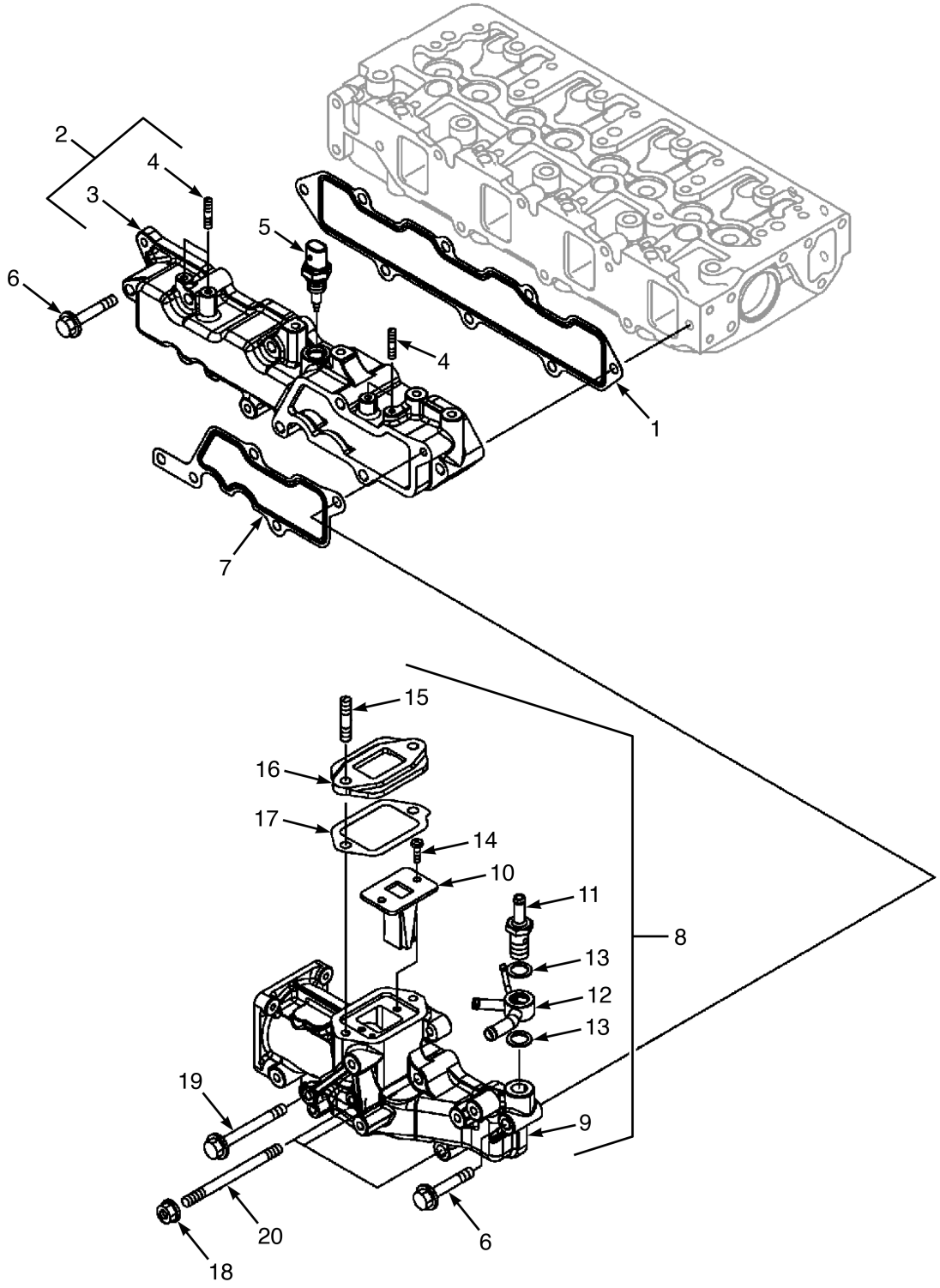

BP092049

©2026 HYSTER COMPANY

INTAKE MANIFOLD
2.1L WITH CAC AND WTH DOC

ITEM	PART NO.	DESCRIPTION	QTY
	4667872	Engine Assy-Diesel (2.1L - w/ CAC w/DOC)	1
1	4305044	Gasket	1
2	4305061	Intake Manifold (Assembly)	1
3	4305060	Intake Manifold	1
4	4305158	Stud	4
5	**a** 4304892	Sensor (Air Temperature)	1
6	4304488	Bolt	6
7	4304894	Gasket	1
8	4305031	Exhaust After Treatment Unit (Assembly)	1
9	4305030	Exhaust After Treatment Unit	1
10	4305063	Valve (Reed)	1
11	4305021	Joint (Hose)	1
12	4305022	Joint (Hose)	1
13	4305137	Washer	2
14	4305140	Screw	2
15	4305159	Stud	2
16	4304903	Spacer (EGR Valve)	1
17	4304904	Gasket (EGR-V Spacer)	1
18	2068378	Nut	3
19	4122593	Bolt	1
20	4305160	Stud	3

FOOTNOTES:

a ECU requires software update when replacing this part, contact local dealer.

©2026 HYSTER COMPANY

EXHAUST MANIFOLD (FIGURE 3-8)

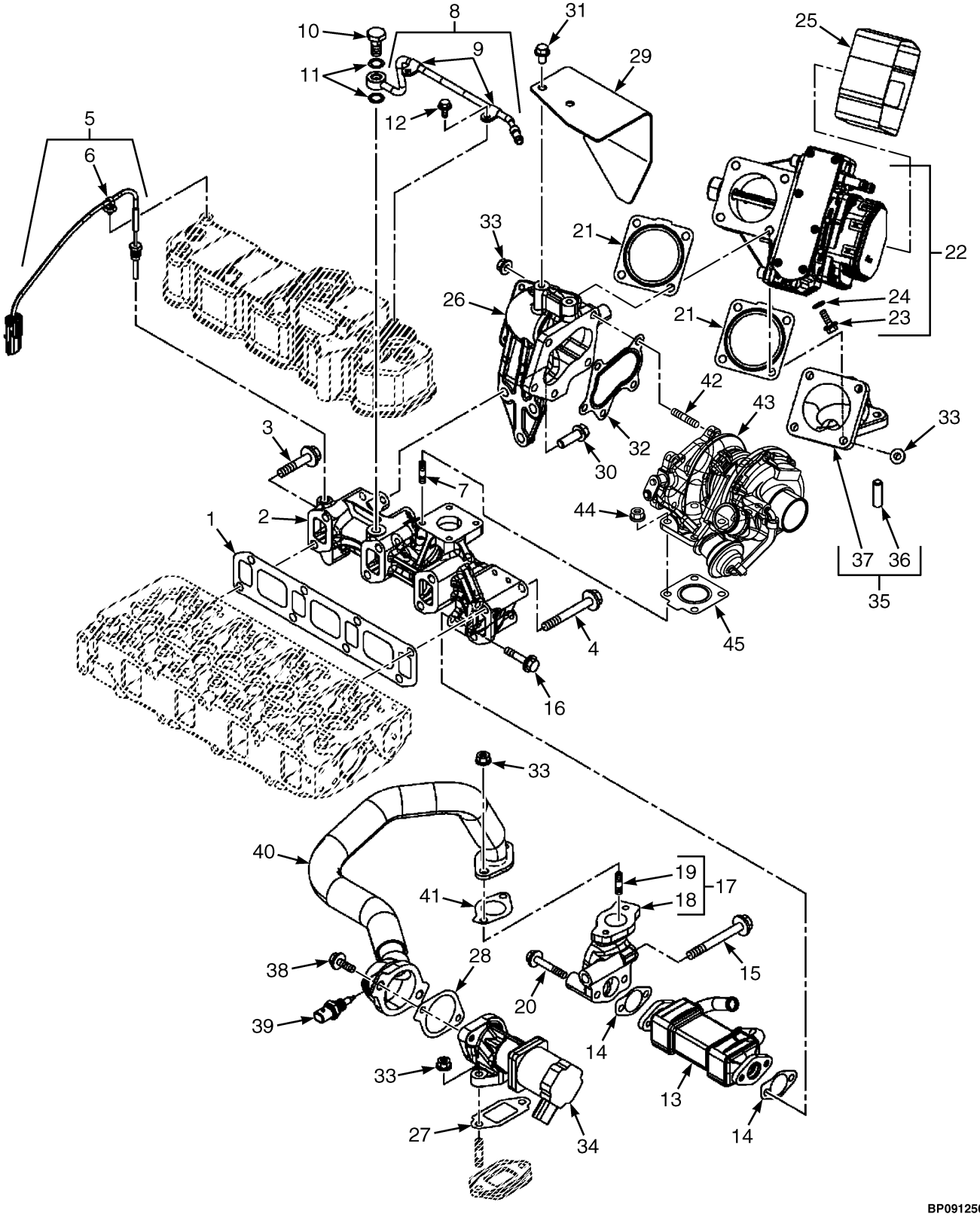

©2026 HYSTER COMPANY

EXHAUST MANIFOLD

ITEM	PART NO.	DESCRIPTION	QTY
	4667918	Engine Assy-Diesel (2.1L - w/CAC w/DPF)	1
	4667873	Engine Assy-Diesel (2.1L - w/DPF)	1
1	4304515	Gasket (Manifold)	1
2	4305062	Exhaust Manifold	1
3	4305032	Bolt	1
4	4305133	Bolt	7
5	4372493	Sensor - Exhaust EGT	1
6	4304491	Clip	1
7	4304848	Stud	4
8	4304897	Pipe	1
9	4305148	Clamp	2
10	4304898	Bolt	1
11	1599815	Gasket	2
12	4122582	Bolt	2
13	4304901	Cooler	1
14	4304902	Gasket	2
15	4305132	Bolt	1
16	4305129	Bolt	2
17	4305090	Pipe EGR Out Pipe	1
18	4305091	Pipe	1
19	4304848	Stud	2
20	4304488	Bolt	2
21	2068377	Gasket	2
22	4305046	Valve - Exhaust Throttle	1
23	4305047	Bolt	1
24	4305048	Washer	1
25	4305131	Insulator	1
26	4305085	Exhaust Pipe - Bend Assembly, T/C Out	1
27	4304907	Gasket (EGR-V Outlet)	1
28	4304906	Gasket (EGR-V Inlet)	1
29	4305088	Cover (Turbocharger)	1
30	4305134	Bolt	3
31	4304642	Bolt	3
32	4304855	Gasket	1
33	2068378	Nut	13
34	4305051	Valve (EGR)	1
35	4305087	Exhaust Pipe - Exhaust Bend Assembly	1
36	4305084	Stud	4
37	. . . . .	Exhaust Pipe (Bend)	1
38	1599801	Bolt	2
39	4304905	Sensor (EGR Gas Temp)	1
40	4305089	Pipe (EGR Pipe Assembly)	1
41	4304877	Gasket	1
42	1599562	Stud	5
43	4305122	Turbocharger (w/ DPF and CAC)	1
43	4305100	Turbocharger (w/DPF, no CAC)	1
44	2068378	Nut	4
45	4304854	Gasket	1

©2026 HYSTER COMPANY

EXHAUST MANIFOLD (FIGURE 3-9)
2.1L WITH CAC AND WTH DOC

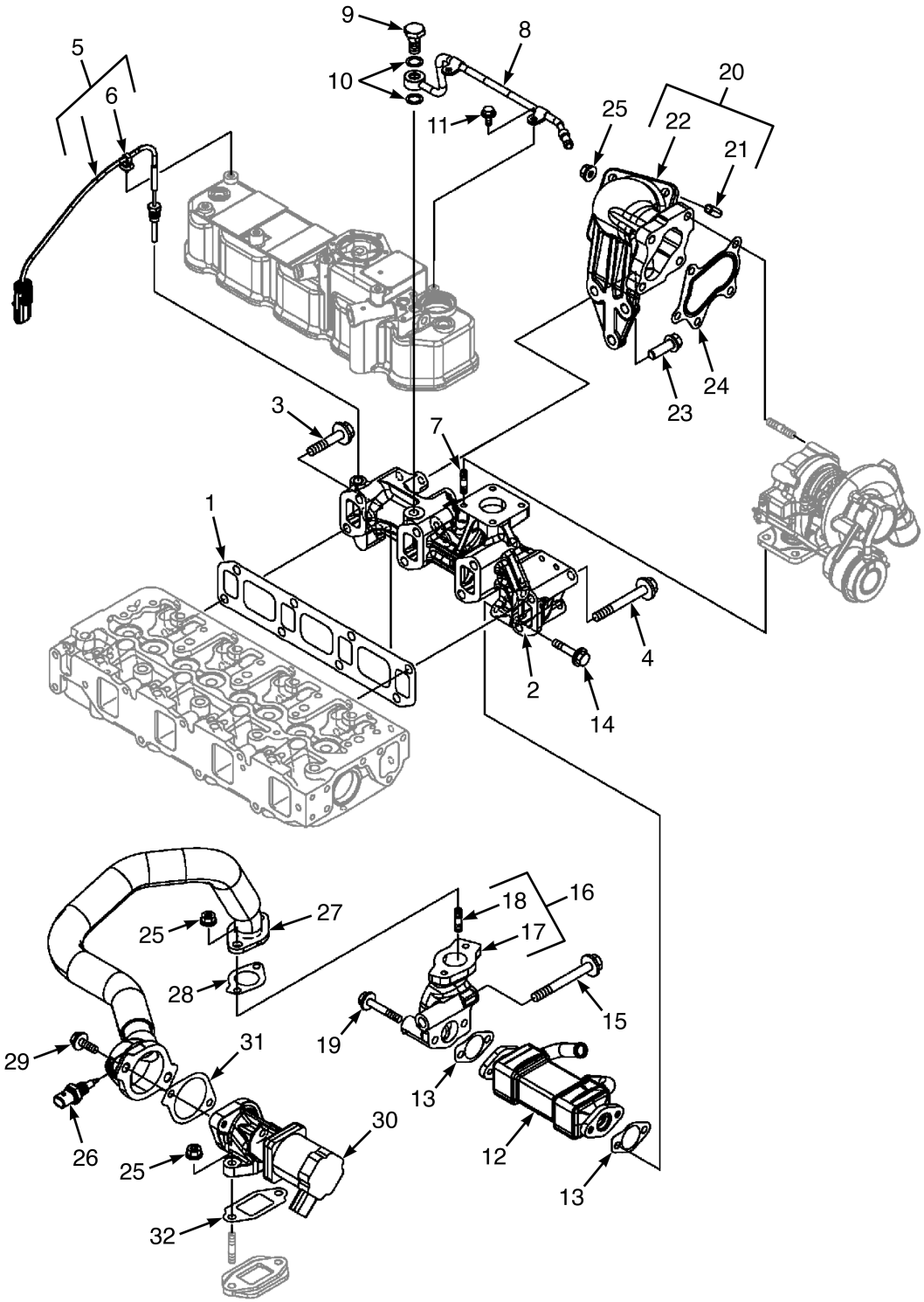

BP092048

©2026 HYSTER COMPANY

EXHAUST MANIFOLD
2.1L WITH CAC AND WTH DOC

ITEM	PART NO.	DESCRIPTION	QTY
	4667872	Engine Assy-Diesel (2.1L - w/ CAC w/DOC)	1
1	4304515	Gasket (Manifold)	1
2	4380241	Exhaust Manifold	1
3	4305032	Bolt	1
4	4305133	Bolt	7
5	**a** 4372493	Sensor - Exhaust EGT	1
6	4304491	Clip	1
7	4380242	Stud	4
8	4380243	Exhaust Pipe	1
9	4304898	Bolt	1
10	1599815	Gasket	2
11	4122582	Bolt	1
12	4304901	Cooler (EGR)	1
13	4304902	Gasket	2
14	4305132	Bolt	1
15	4305129	Bolt	2
16	4305090	Pipe EGR Out Pipe	1
17	4305091	Pipe	1
18	4304848	Stud	2
19	4304488	Bolt	2
20	4380244	Exhaust Pipe	1
21	4304516	Stud	4
22	4380245	Exhaust Pipe	1
23	4305134	Bolt	3
24	4380246	Gasket	3
25	2068378	Nut	8
26	**a** 4304905	Sensor (EGR Gas Temp)	1
27	4305089	Pipe (EGR Pipe Assembly)	1
28	4304877	Gasket	1
29	1599801	Bolt	2
30	**a** 4380247	Valve (EGR)	1
31	4304906	Gasket (EGR-V Inlet)	1
32	4304907	Gasket (EGR-V Outlet)	1

FOOTNOTES:

a ECU requires software update when replacing this part, contact local dealer.

CAMSHAFT AND IDLE GEAR (FIGURE 3-10)

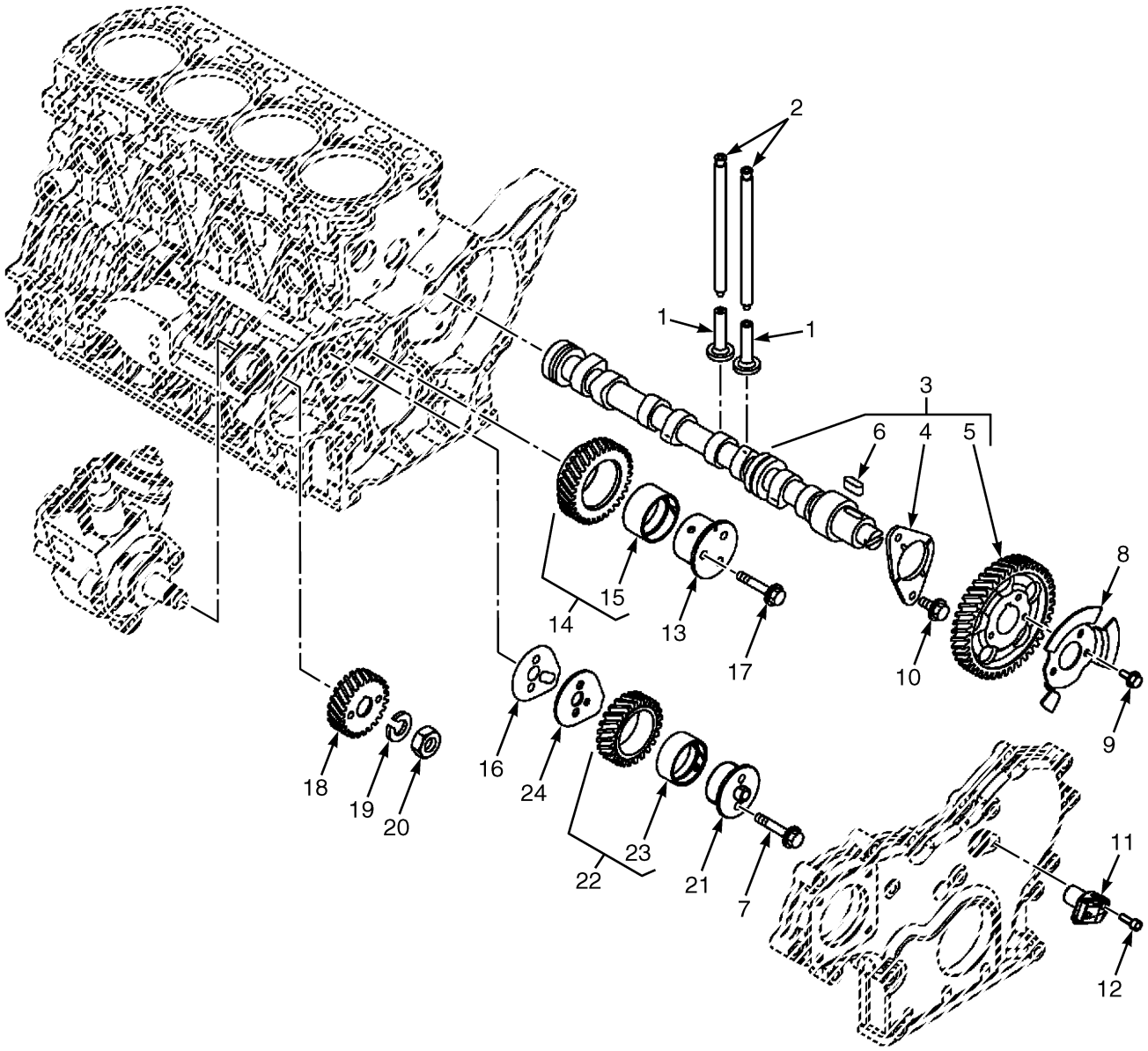

©2026 HYSTER COMPANY

CAMSHAFT AND IDLE GEAR

ITEM	PART NO.	DESCRIPTION	QTY
	4667918	Engine Assy-Diesel (2.1L - w/CAC w/DPF)	1
	4667873	Engine Assy-Diesel (2.1L - w/DPF)	1
	4667872	Engine Assy-Diesel (2.1L - w/ CAC w/DOC)	1
1	1599569	Tappet	8
2	4304452	Rod	8
3	4305052	Camshaft (Assembly)	1
4	1599572	Retainer	1
5	4304908	Gear	1
6	1599574	Key	1
7	1599473	Bolt	2
8	4304455	Camshaft (Pulser)	1
9	4122581	Bolt	1
10	1599568	Bolt	3
11	4304616	Sensor (Rotation)	2
12	4304499	Bolt	1
13	4304918	Shaft (Idle Gear A)	1
14	4304921	Gear (Idle Gear A Assembly)	1
15	4304451	Bushing (Idle Gear)	1
16	4304924	Gasket (Idle Shaft B)	1
17	1599475	Bolt	3
18	4304925	Gear (Supply Pump)	1
19	4122567	Washer	1
20	4122600	Locknut	1
21	4304919	Shaft (Idle Gear B)	1
22	4304922	Gear (Idle Gear B Assembly)	1
23	4304920	Bushing (Idle Gear B)	1
24	4304923	Plate (Idle Shaft B)	1

©2026 HYSTER COMPANY

CRANKSHAFT AND PISTON (FIGURE 3-11)

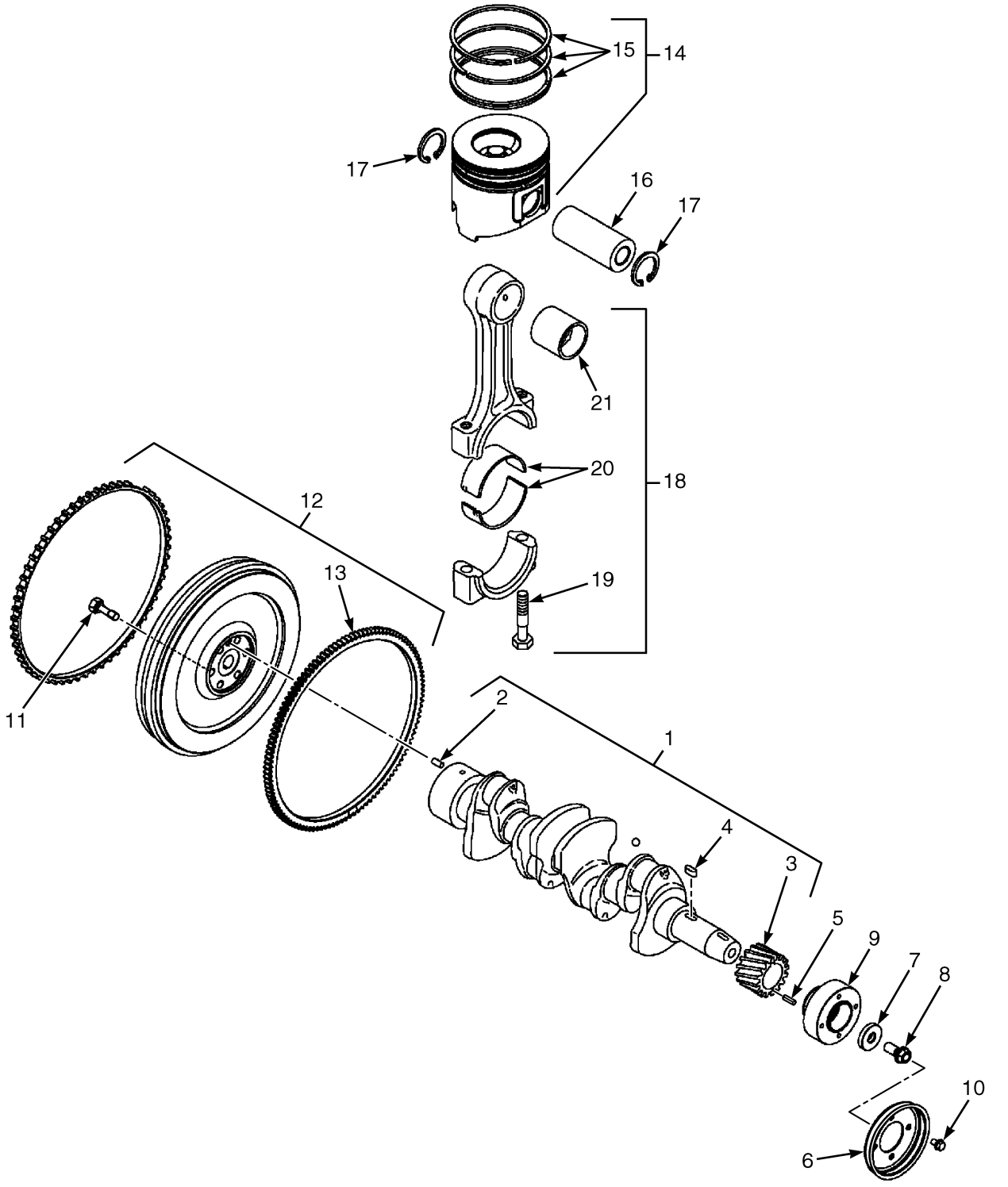

©2026 HYSTER COMPANY

CRANKSHAFT AND PISTON

ITEM	PART NO.	DESCRIPTION	QTY
	4718037	Engine Assy-Diesel (2.1L - w/DPF)	1
	4718038	Engine Assy-Diesel (2.1L - w/CAC w/DPF)	1
	4667918	Engine Assy-Diesel (2.1L - w/CAC w/DPF)	1
	4667873	Engine Assy-Diesel (2.1L - w/DPF)	1
	4667872	Engine Assy-Diesel (2.1L - w/ CAC w/DOC)	1
1	4304856	Crankshaft (Assembly)	1
2	1599458	Pin	1
3	4304468	Gear	1
4	1599574	Key	1
5	4303230	Pin	1
6	4304469	Washer	1
7	4304470	Crankshaft - V-Pulley	1
8	1599590	Bolt	1
9	4305104	Spacer	1
10	1599448	Bolt	4
11	4303237	Bolt	6
12	4303238	Flywheel (Assembly)	1
13	4303239	Gear	1
14	4305034	Piston (Assembly)	4
14	4305036	Piston (Assembly) (Oversized - 0.25) (Optional)	4
14	4380261	Piston (Assembly) (DOC)	4
14	4380269	Piston (Assembly) (Optional) (DOC)	4
15	4305035	Ring (Piston Ring Set)	4
15	4305037	Ring (Piston Ring Set) (Oversized - 0.25) (Optional)	4
15	4380262	Piston Ring (DOC)	4
15	4380270	Piston Ring (Optional) (DOC)	4
16	4304465	Pin	4
16	4380263	Pin (DOC)	4
17	4304466	Ring	8
17	4380264	Ring (DOC)	8
18	4304458	Rod Assy	4
18	4380265	Rod (Assembly) (DOC)	4
19	4304459	Bolt (Connecting Rod)	8
20	4304460	Pin (Metal Crank Pin Assembly)	4
20	4304462	Pin (Metal Crank Pin) (Oversized - 0.25) (Optional)	4
20	4380266	Bearing (DOC)	4
20	4380268	Bearing (Optional) (DOC)	4
21	4304461	Pin (Metal Piston Pin)	4

©2026 HYSTER COMPANY

OIL PUMP AND ATTACHING PARTS (FIGURE 3-12)

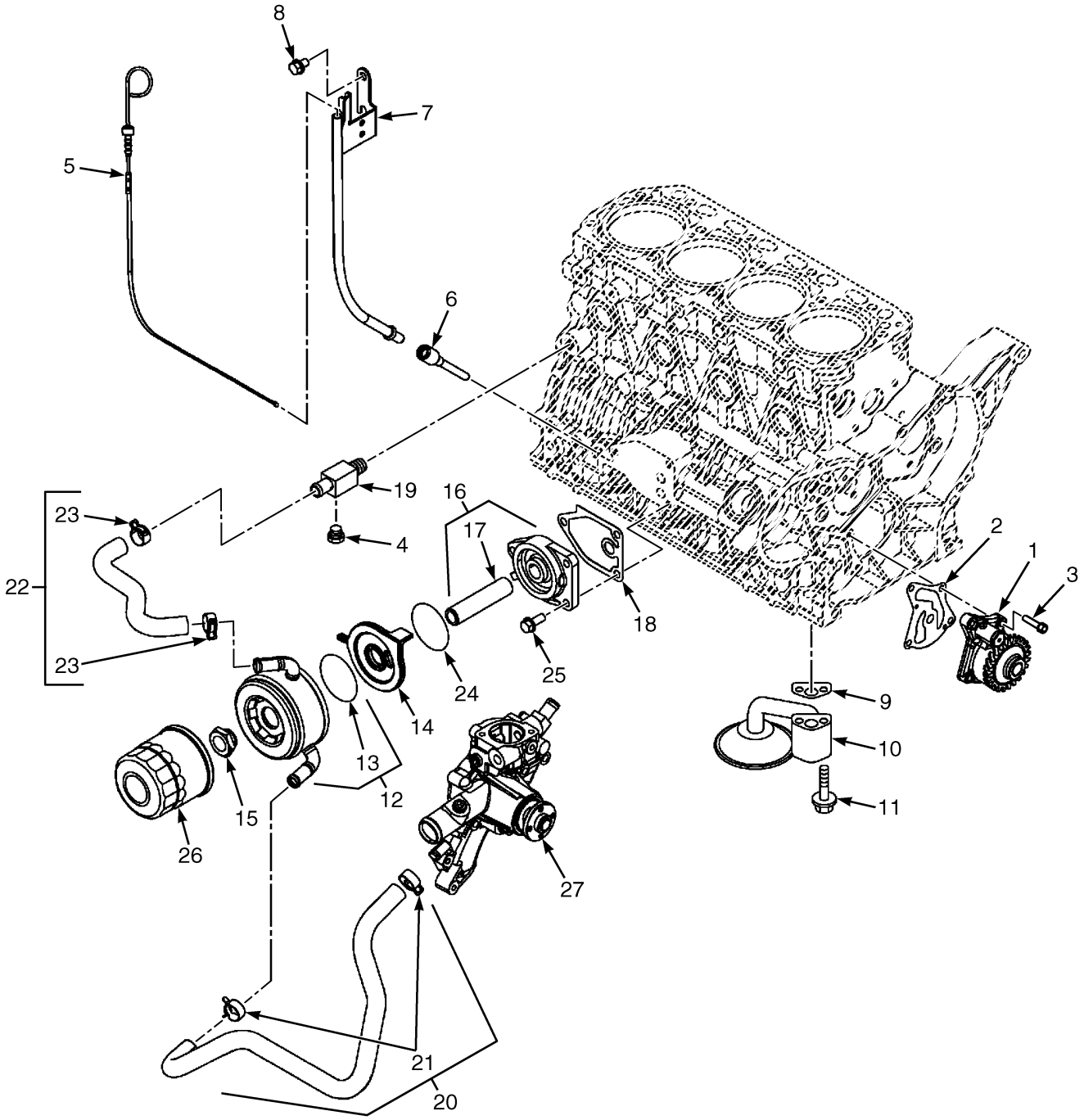

©2026 HYSTER COMPANY

OIL PUMP AND ATTACHING PARTS

ITEM	PART NO.	DESCRIPTION	QTY
	4667918	Engine Assy-Diesel (2.1L - w/CAC w/DPF)	1
	4667873	Engine Assy-Diesel (2.1L - w/DPF)	1
	4667872	Engine Assy-Diesel (2.1L - w/ CAC w/DOC)	1
1	4304526	Oil Pump (Assembly)	1
1	4380271	Engine Oil Pump (Assembly) (DOC)	1
2	4304527	Gasket	1
3	1599908	Bolt	4
4	1599802	Drain Plug	1
5	4305105	Dipstick	1
5	81049814	Dipstick (Alternate Part)	1
6	4304829	Guide (Dipstick)	1
7	4305106	Guide	1
8	1599448	Bolt	2
9	4303244	Gasket	1
10	4303245	Pipe (Oil Inlet)	1
11	1599579	Bolt	2
12	4368002	Oil Cooler	1
12	4304876	Oil Cooler (Assembly) (Powershift Transmission)	1
13	4368003	O-Ring	1
13	4304789	O-Ring (Powershift Transmission)	1
14	4305070	Bracket	1
15	4304847	Nut	1
16	4304862	Bracket (Fillter Assembly)	1
17	4304863	Stud	1
18	4304534	Gasket	1
19	4304536	Joint	1
20	4368005	Hose Assy	1
20	4305110	Hose (Optional) (DOC)	1
21	4304538	Clamp	2
22	4368006	Hose Assy	1
22	4305039	Pipe (Optional) (DOC)	1
23	4304538	Clamp	2
24	4368007	O-Ring	1
24	4305152	O-Ring (Optional) (DOC)	1
25	1599471	Bolt	3
26	2077983	Oil Filter	1
27	4305107	Pump (Water)	1
27	4380278	Water Pump (Assembly) (DOC)	1

©2026 HYSTER COMPANY

OIL PIPE (FIGURE 3-13)

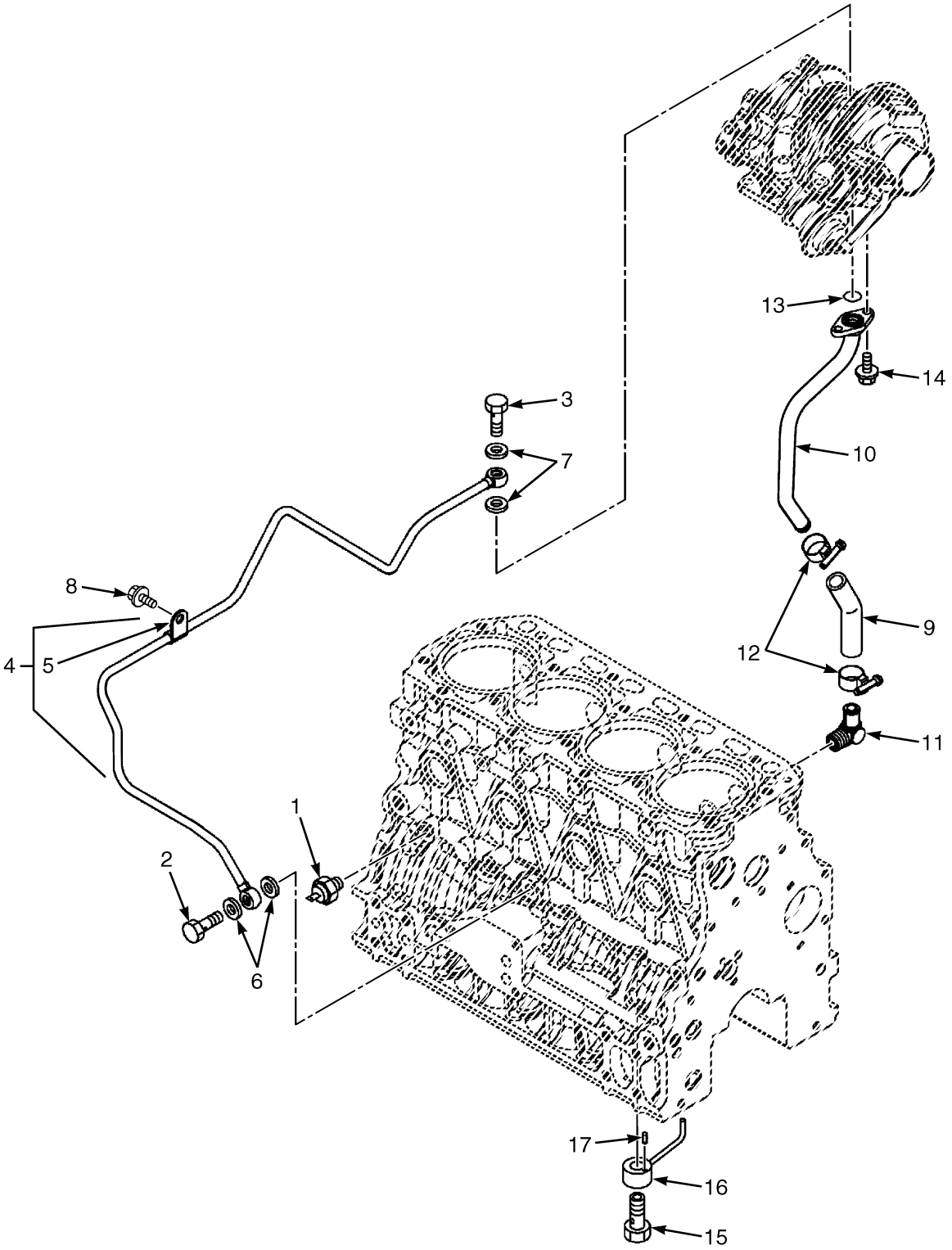

©2026 HYSTER COMPANY

OIL PIPE

ITEM	PART NO.	DESCRIPTION	QTY
	4667872	Engine Assy-Diesel (2.1L - w/ CAC w/DOC)	1
	4667873	Engine Assy-Diesel (2.1L - w/DPF)	1
	4667918	Engine Assy-Diesel (2.1L - w/CAC w/DPF)	1
1	4304620	Switch (Oil Pressure)	1
2	4304791	Bolt	1
2	4380273	Check Valve (DOC)	1
3	4304787	Bolt	1
4	4305071	Pipe (Turbine Pipe Assembly)	1
4	4380272	Pipe (Turbocharger oil) (DOC)	1
5	4304793	Retainer	1
6	4305136	Washer	2
7	4305150	Gasket	2
8	1599448	Bolt	1
9	4304810	Joint	1
10	4305072	Pipe (Oil Return)	1
10	4380274	Pipe (Oil Return) (DOC)	1
11	4304851	Elbow	1
12	4305141	Clamp	2
13	4303235	O-Ring	1
13	4380275	Gasket (DOC)	1
14	4122582	Bolt	2
15	4303030	Check Valve	4
15	4380276	Check Valve (DOC)	4
16	4303031	Nozzle	4
16	4380277	Nozzle (Assembly) (DOC)	4
17	4303230	Pin	4
17	. . . . .	Pin (DOC)	1

COOLING WATER SYSTEM (FIGURE 3-14)

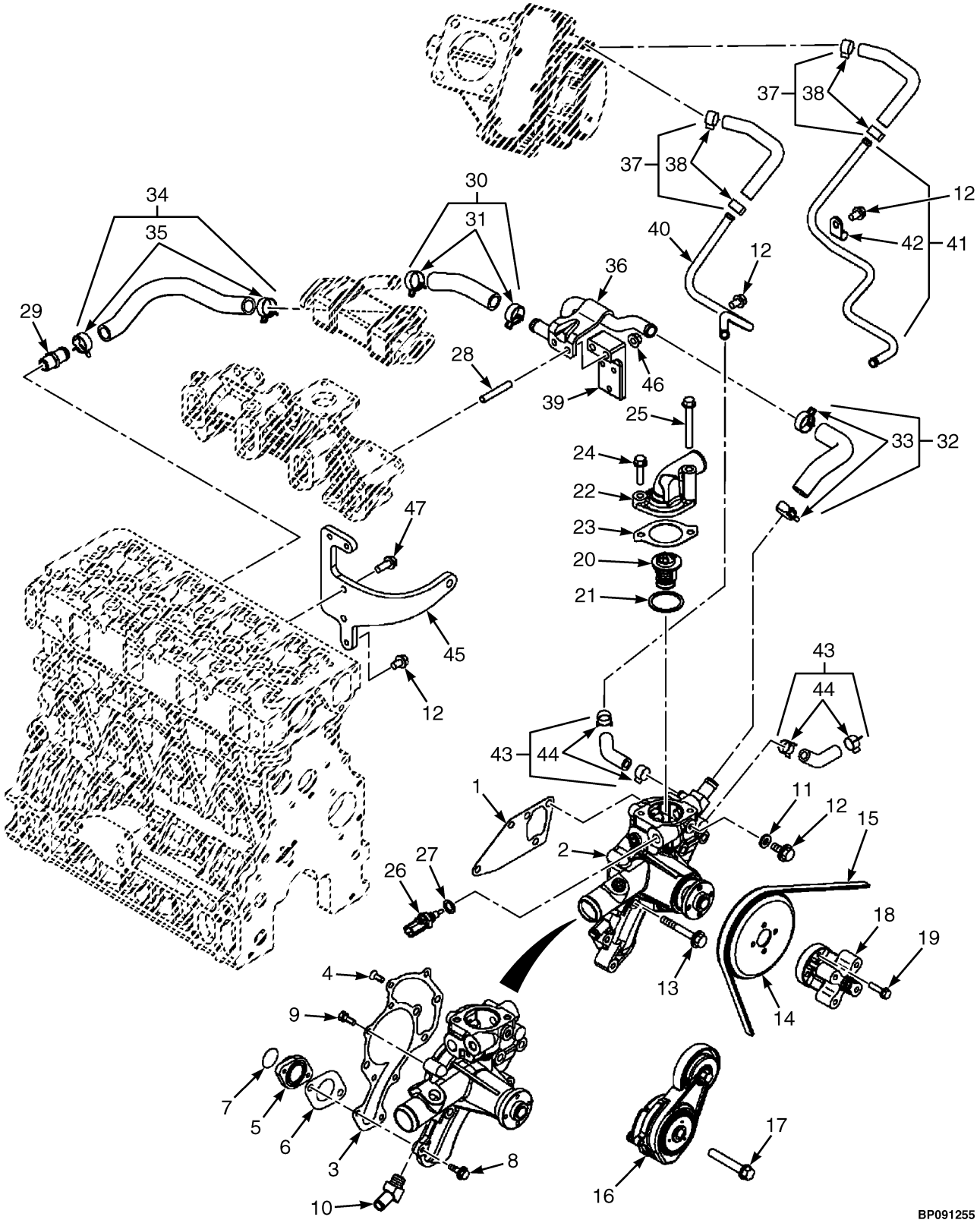

©2026 HYSTER COMPANY

COOLING WATER SYSTEM

ITEM	PART NO.	DESCRIPTION	QTY
	4667918	Engine Assy-Diesel (2.1L - w/CAC w/DPF)	1
	4667873	Engine Assy-Diesel (2.1L - w/DPF)	1
1	4304543	Gasket	1
2	4305107	Pump (Water)	1
3	4304822	Gasket	1
4	4304823	Screw	3
5	4304824	Flange	1
6	4304825	Gasket	1
7	4304546	O-Ring	1
8	1599816	Bolt	2
9	1599899	Bolt	3
10	4304812	Elbow	1
11	4122570	Gasket	1
12	1599448	Bolt	4
13	1599579	Bolt	4
14	4304553	Pulley	1
15	4304554	Belt	1
16	4304555	Tensioner	1
17	4304556	Bolt	1
18	4304557	Spacer	1
19	4122585	Bolt	4
20	4304548	Thermostat	1
21	4304549	Gasket	1
22	4304550	Cover (Thermostat)	1
23	4304551	Gasket	1
24	1599472	Bolt	1
25	4304552	Bolt	1
26	4304621	Sensor (Temperature)	1
27	1600086	Seal	1
28	4304641	Stud	2
29	4304547	Joint	1
30	4305053	Pipe	1
31	4304881	Hose Clamp	2
32	4305111	Hose	1
33	4304881	Hose Clamp	2
34	4305075	Pipe	1
35	4304881	Hose Clamp	2
36	4305074	Pipe (EGR-C Out)	1
37	4305112	Hose (Water)	2
38	4304539	Clamp	2
39	4305113	Bracket - Exhaust Pipe Stay	1
40	4305114	Pipe	1
41	4305115	Pipe	1
42	4305149	Clamp	1
43	4305116	Hose (Water)	2
44	4304539	Clamp	2
45	4305119	Bracket - Alternator Stay	1
46	2068378	Nut	2
47	1599471	Bolt	2

©2026 HYSTER COMPANY

COOLING WATER SYSTEM (FIGURE 3-15)
2.1L WITH CAC AND WTH DOC

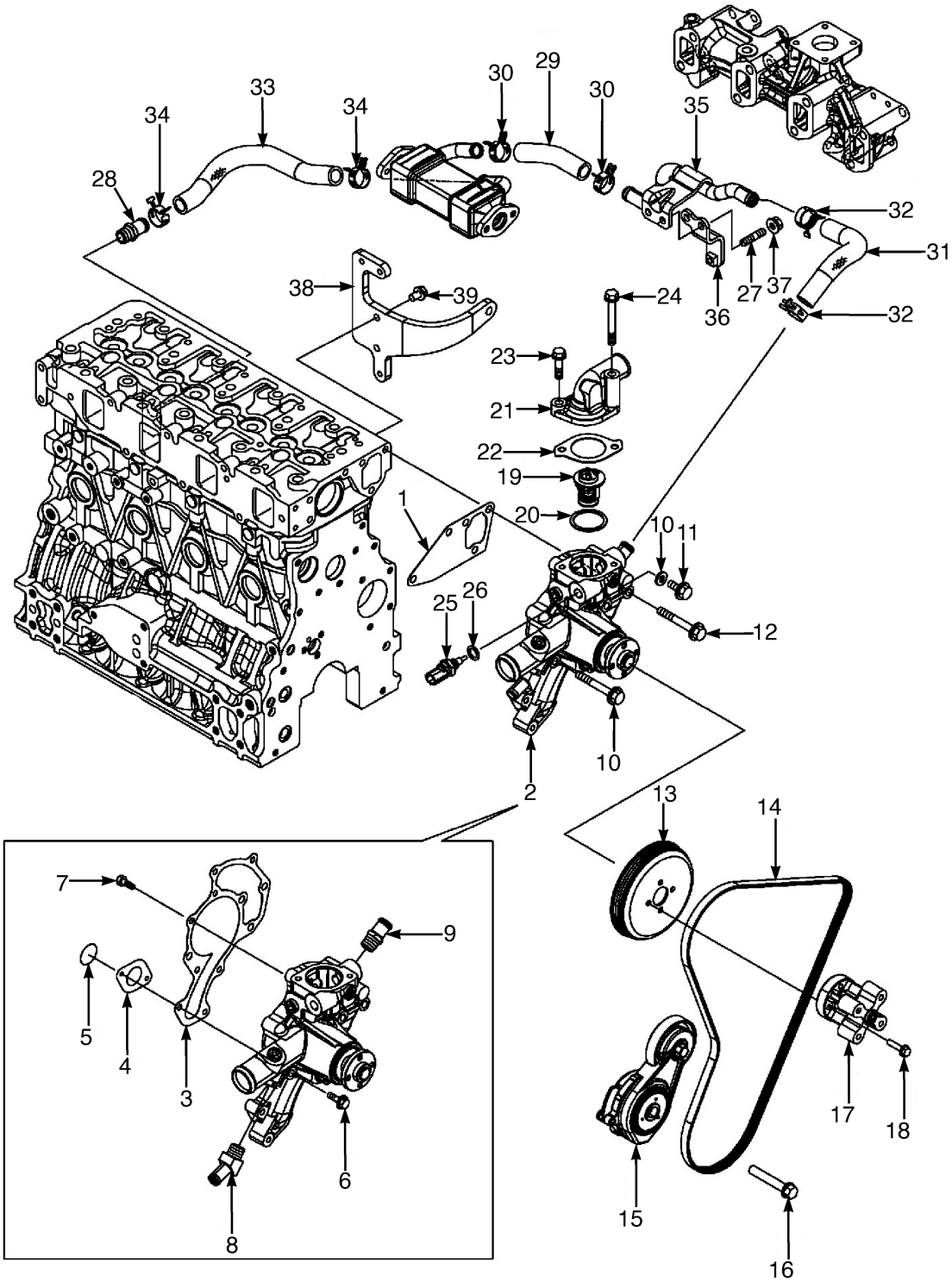

BP092052

©2026 HYSTER COMPANY

COOLING WATER SYSTEM
2.1L WITH CAC AND WTH DOC

ITEM	PART NO.	DESCRIPTION	QTY
	4667872	Engine Assy-Diesel (2.1L - w/ CAC w/DOC)	1
1	4304543	Gasket	1
2	4380278	Water Pump (Assembly)	1
3	4304822	Gasket	1
4	4304825	Gasket	1
5	4304546	O-Ring	1
6	1599816	Bolt	2
7	1599899	Bolt	3
8	4304812	Elbow	1
9	4304547	Joint	1
10	4122570	Gasket	1
11	1599448	Bolt	1
12	1599579	Bolt	4
13	4304553	Pulley	1
14	4304554	Belt	1
15	4304555	Tensioner	1
16	4304556	Bolt	1
17	4304557	Spacer	1
18	4122585	Bolt	4
19	4304548	Thermostat	1
20	4304549	Gasket	1
21	4304550	Cover (Thermostat)	1
22	4304551	Gasket	1
23	1599472	Bolt	1
24	4304552	Bolt	1
25	4304621	Sensor (Temperature)	1
26	1600086	Seal	1
27	1599562	Stud	2
28	4304547	Joint	1
29	4305053	Pipe	1
30	4304881	Hose Clamp	2
31	4380279	Hose	1
32	4304881	Hose Clamp	2
33	4305075	Pipe	1
34	4304881	Hose Clamp	2
35	4305074	Pipe (EGR-C Out)	1
36	4380280	Bracket (Harness)	1
37	2068378	Nut	2
38	4305119	Bracket - Alternator Stay	1
39	1599471	Bolt	2

©2026 HYSTER COMPANY

ENGINE FUEL SYSTEM (FIGURE 3-16)

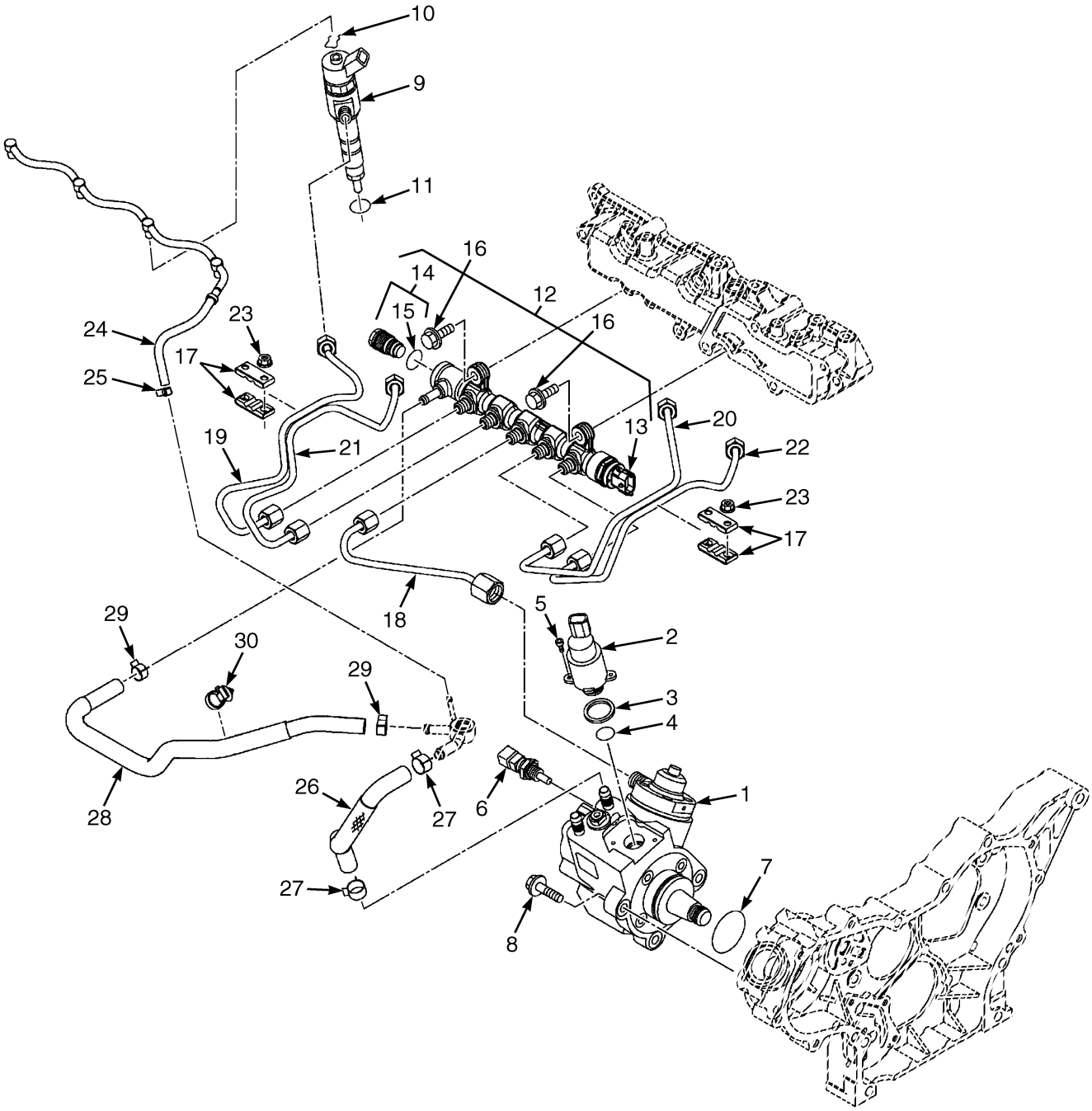

©2026 HYSTER COMPANY

ENGINE FUEL SYSTEM

ITEM	PART NO.	DESCRIPTION	QTY
	4667918	Engine Assy-Diesel (2.1L - w/CAC w/DPF)	1
	4667873	Engine Assy-Diesel (2.1L - w/DPF)	1
	4667872	Engine Assy-Diesel (2.1L - w/ CAC w/DOC)	1
1	4305076	Fuel Pump (Assembly)	1
2	4304926	Valve	1
3	4304927	Sealing Ring	1
4	4304928	O-Ring	1
5	4304929	Bolt	2
6	4304930	Sensor (Temperature)	1
7	4304931	O-Ring	1
8	1599472	Bolt	3
9	4305040	Injector	4
9	4380281	Injector (DOC)	1
10	4304932	Retaining Ring	4
11	4305077	O-Ring	4
12	4305054	Rail	1
13	4304933	Sensor	1
14	4304934	Valve	1
15	4304935	O-Ring	1
16	1599801	Bolt	2
17	4122433	Bracket	4
18	4305023	Pipe (Rail in Pipe)	1
19	4305055	Pipe (Injection Pipe)	1
20	4305024	Pipe (Injection Pipe)	1
21	4305056	Pipe (Injection Pipe)	1
22	4305025	Pipe (Injection Pipe)	1
23	4304613	Nut	4
24	4304864	Pipe (Return)	1
25	4305146	Clamp	1
26	4305020	Pipe (Return Pipe)	1
27	4304539	Clamp	2
28	4305117	Hose (Return)	1
29	4304633	Hose Clamp	2
30	4304491	Clip	1

©2026 HYSTER COMPANY

STARTER (FIGURE 3-17)

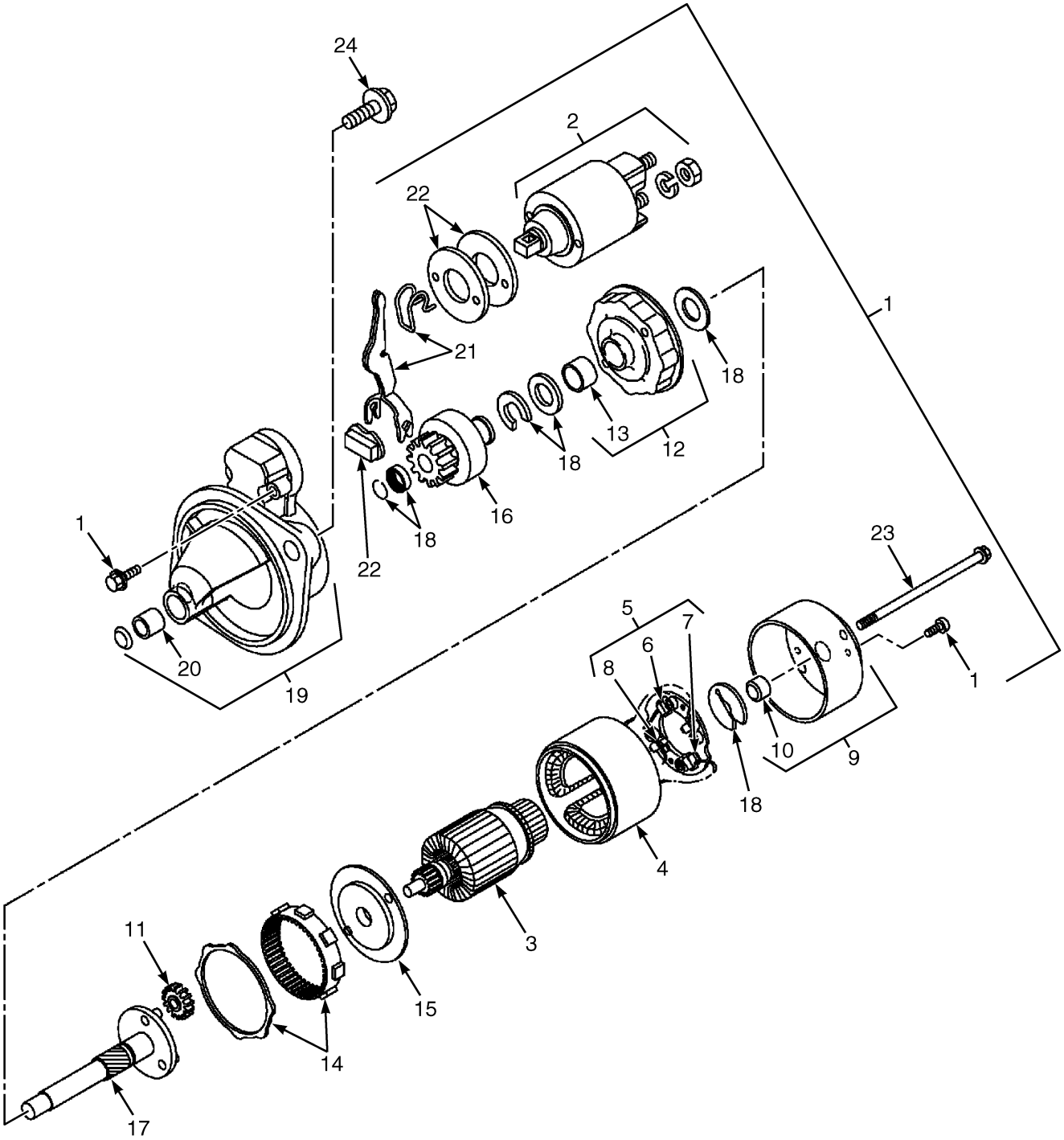

BP091257

©2026 HYSTER COMPANY

STARTER

ITEM	PART NO.	DESCRIPTION	QTY
	4667918	Engine Assy-Diesel (2.1L - w/CAC w/DPF)	1
	4667873	Engine Assy-Diesel (2.1L - w/DPF)	1
	4667872	Engine Assy-Diesel (2.1L - w/ CAC w/DOC)	1
1	4304570	Starter	1
2	4367879	Switch (Magnet Assembly)	1
3	. . . . .	Armature	1
4	. . . . .	Yoke	1
5	. . . . .	Brush Holder	1
6	. . . . .	Brush	2
7	. . . . .	Brush (Set)	1
8	. . . . .	Spring	4
9	. . . . .	Cover Assembly	1
10	. . . . .	Cover	1
11	4367880	Gear (Planetary)	3
12	. . . . .	Center Bracket	1
13	. . . . .	Bracket	1
14	. . . . .	Internal Gear	1
15	. . . . .	Bracket	1
16	. . . . .	Pinion	1
17	. . . . .	Pinion Shaft	1
18	. . . . .	Washer Set	1
19	. . . . .	Gear Case	1
20	. . . . .	Metal Starter	1
21	. . . . .	Shift Lever	1
22	. . . . .	Dust Cover Kit	1
23	4304592	Bolt	2
24	4122595	Bolt	2

©2026 HYSTER COMPANY

ALTERNATOR (FIGURE 3-18)

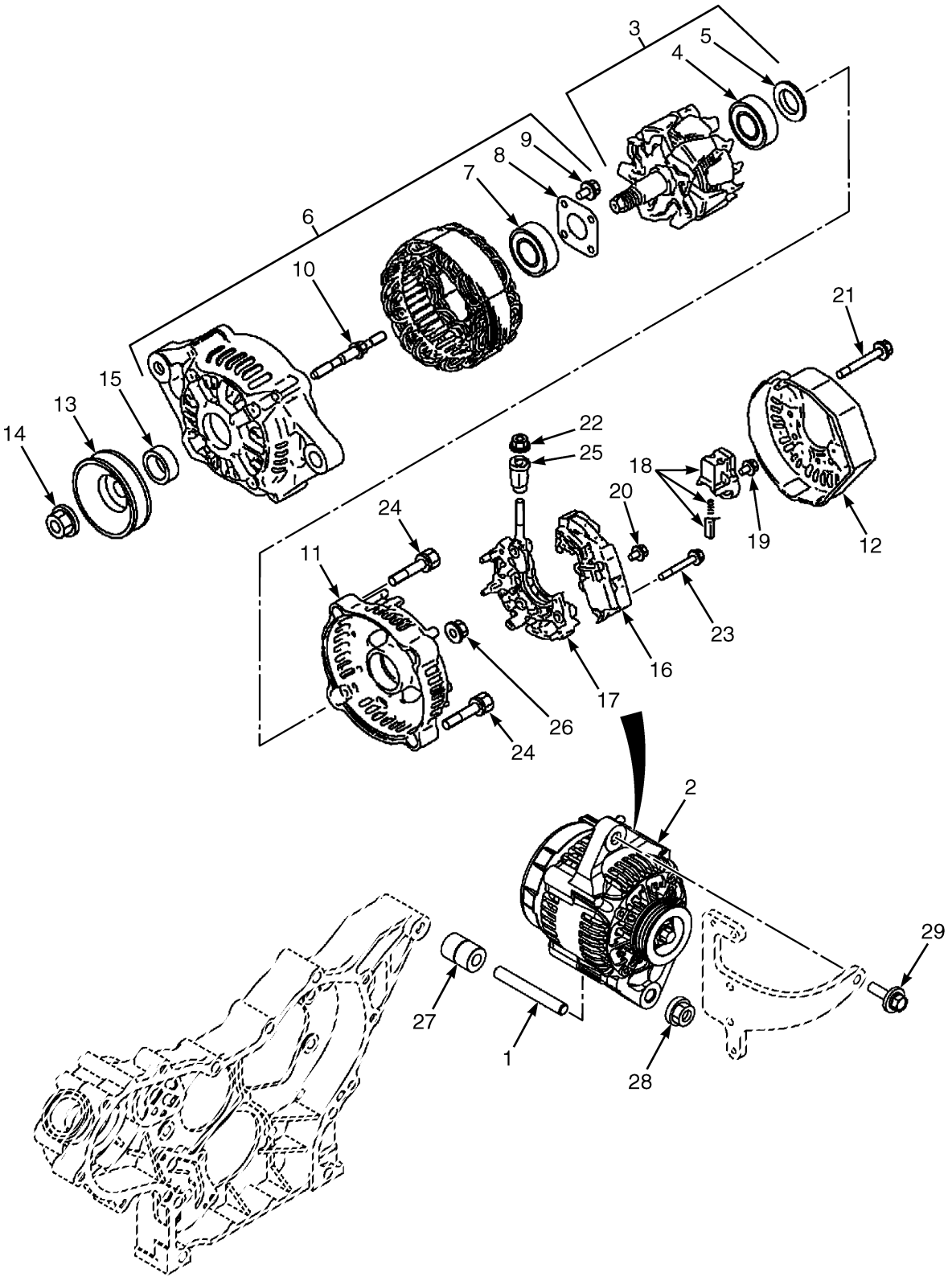

©2026 HYSTER COMPANY

ALTERNATOR

ITEM	PART NO.	DESCRIPTION	QTY
	4667918	Engine Assy-Diesel (2.1L - w/CAC w/DPF)	1
	4667873	Engine Assy-Diesel (2.1L - w/DPF)	1
	4667872	Engine Assy-Diesel (2.1L - w/ CAC w/DOC)	1
1	4304593	Stud	1
2	4304594	Alternator	1
3	. . . . .	Nut	1
4	1599877	Rotator Assembly	1
5	1599878	Ball Bearing	1
6	1599879	Cover	1
7	2084466	Housing Assembly	1
8	1599873	Ball Bearing	1
9	1599874	Plate	1
10	1599875	Screw	4
11	1599876	Stud	2
12	. . . . .	Frame (End)	1
13	2084469	Housing	1
14	. . . . .	Pulley	1
15	. . . . .	Nut	1
16	. . . . .	Collar	1
17	. . . . .	Regulator Assembly	1
18	2084467	Holder	1
19	. . . . .	Brush Holder	1
20	. . . . .	Screw	6
21	. . . . .	Screw	1
22	. . . . .	Bolt	3
23	. . . . .	Screw with washer	2
24	. . . . .	Bolt	2
25	. . . . .	Insulating Bushing	1
26	. . . . .	Nut	2
27	4304600	Spacer	1
28	1599542	Nut	1
29	1599896	Bolt	1

©2026 HYSTER COMPANY

ALTERNATOR (FIGURE 3-19)
HIGH OUTPUT

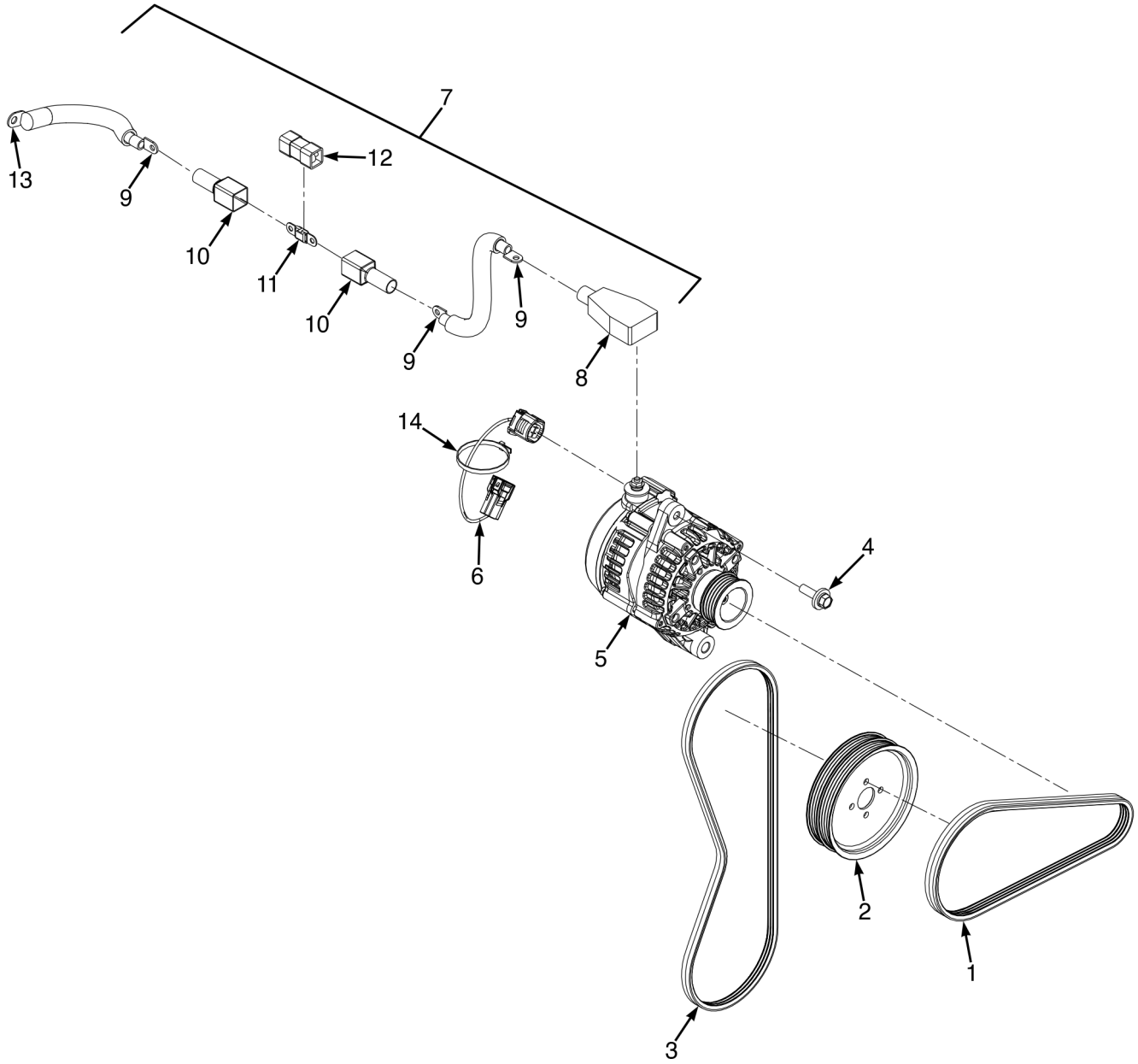

BP092223

©2026 HYSTER COMPANY

ITEM	PART NO.	DESCRIPTION	QTY
1	4740894	Belt	1
2	4392808	Water Pump Pulley (High Output Alternator)	1
3	4740895	Belt	1
4	1599896	Bolt	1
5	4741325	Alternator (High Output)	1
6	81018589	Wire Harness (Alternator Jumper)	1
7	81017383	Power Cable (Diesel Fuse Link)	1
8	81025473	Boot	1
9	4696002	Terminal (Power)	3
10	4286097	Boot	2
11	81017419	Fuse (125A)	1
12	4695999	Fuse Holder	1
13	927433	Terminal (Battery Cable)	1
14	2004005	Strap Clamp	2

©2026 HYSTER COMPANY

ELECTRICAL PARTS (FIGURE 3-20)

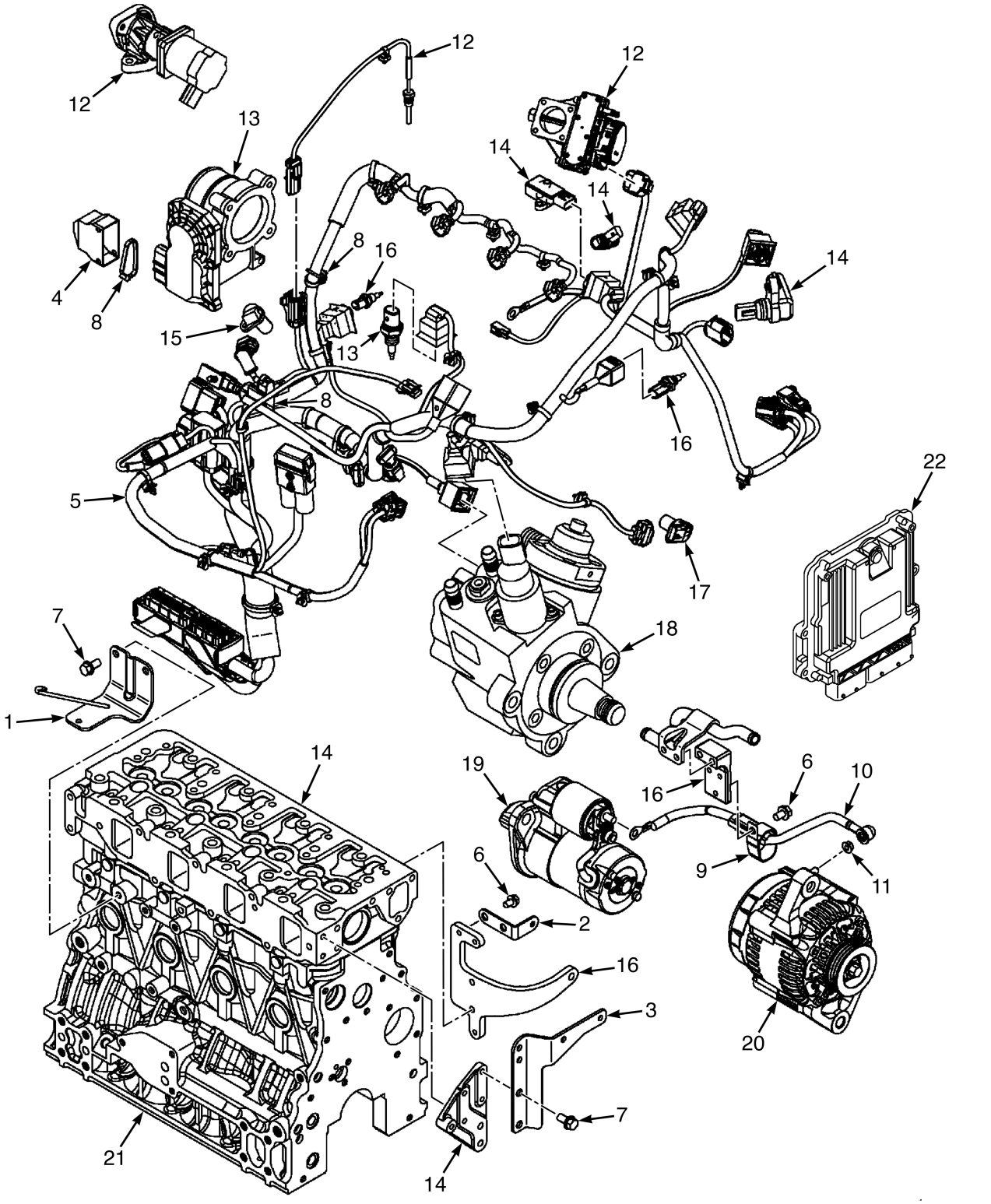

©2026 HYSTER COMPANY

ELECTRICAL PARTS

ITEM	PART NO.	DESCRIPTION	QTY
	4667918	Engine Assy-Diesel (2.1L - w/CAC w/DPF)	1
	4667873	Engine Assy-Diesel (2.1L - w/DPF)	1
	4667872	Engine Assy-Diesel (2.1L - w/ CAC w/DOC)	1
1	4305124	Bracket (Wire Harness)	1
2	4305125	Bracket (Wire Harness)	1
3	4305126	Bracket (Wire Harness)	1
4	4305029	Boot	1
5	4305127	Wire Harness	1
5	4736637	Wire Harness (Engine w/ DPF) (Alternate Part)	1
5	81057967	Resistor	1
5	4305028	Clip	1
5	4736638	Wire Harness (Engine w/DOC)	1
6	1599448	Bolt	3
7	1599470	Bolt	4
8	4305164	Band	3
9	4304880	Clamp	1
10	4305128	Wire Harness (Alternate Starter)	1
10	4368008	Wire Harness (Starter) (w/DOC)	1
11	4304613	Nut	1
12	. . . . .	Exhaust Manifold (☞Figure 3-8)	1
13	. . . . .	Intake Manifold (☞Figure 3-6)	1
14	. . . . .	Cylinder Head (☞Figure 3-5)	1
15	. . . . .	Flywheel Housing (☞Figure 3-4)	1
16	. . . . .	Cooling Water System (☞Figure 3-14)	1
17	. . . . .	Camshaft (☞Figure 3-10)	1
18	. . . . .	Fuel Pump (☞Figure 3-16)	1
19	. . . . .	Starter (☞Figure 3-17)	1
20	. . . . .	Alternator (☞Figure 3-18)	1
21	. . . . .	Cylinder Block (☞Figure 3-2)	1
22	**a** 4305026	Electronic Control Module (Engine Control Module)	1

FOOTNOTES:

a Proper software must be installed, contact dealer.

DIESEL PARTICULATE FILTER (FIGURE 3-21)
2.1L WITH DOC

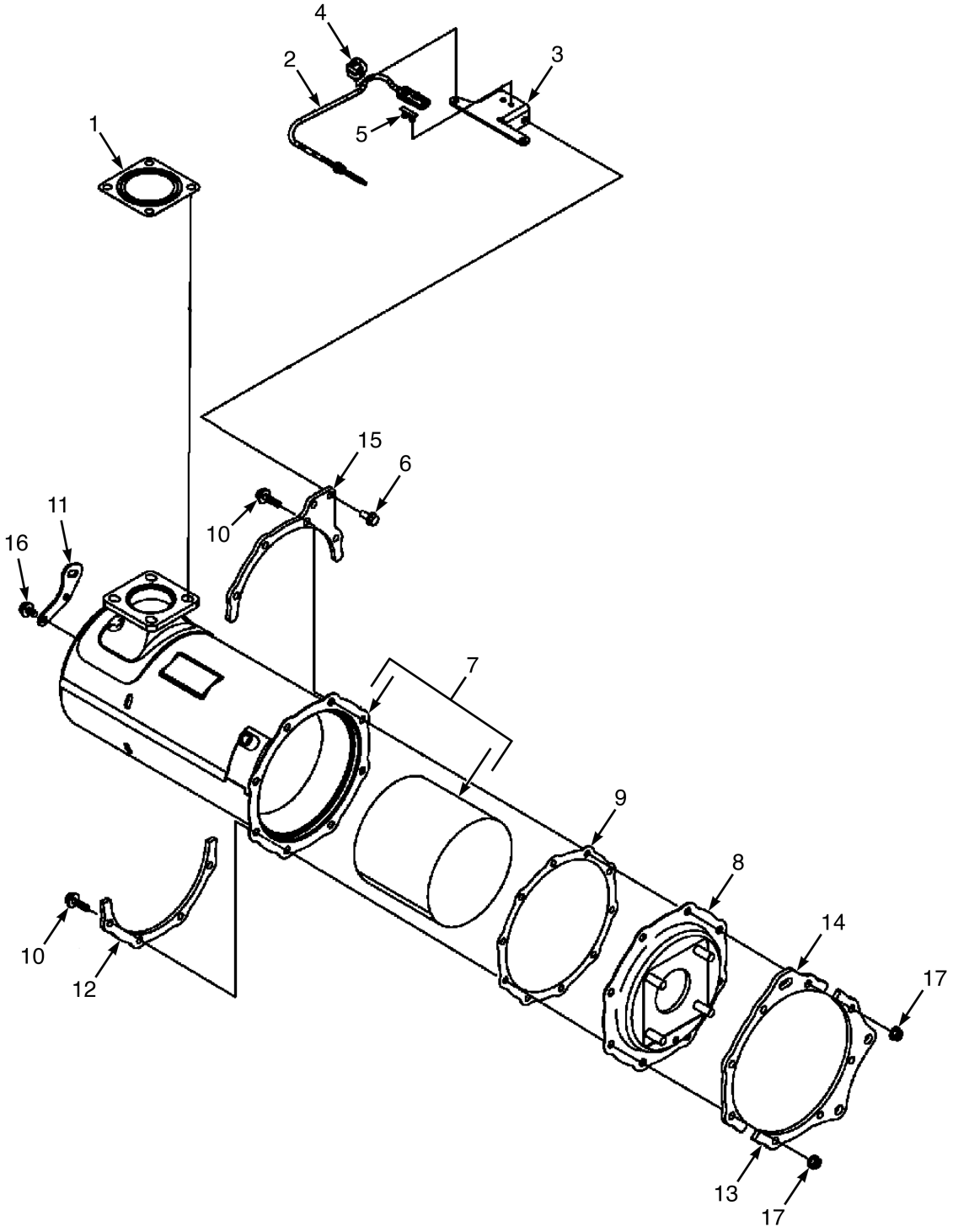

©2026 HYSTER COMPANY

DIESEL PARTICULATE FILTER

2.1L WITH DOC

ITEM	PART NO.	DESCRIPTION	QTY
	4667872	Engine Assy-Diesel (2.1L - w/ CAC w/DOC)	1
1	4068364	Gasket	1
2	4380248	Thermal Sensor	1
3	4380258	Bracket (Sensor)	1
4	4304491	Clip	1
5	4305028	Clip	1
6	1599471	Bolt	2
7	4380249	Filter	1
7	4380250	Case (DOC)	1
8	4380251	Flange (Outlet)	1
9	4380252	Gasket	1
10	4304911	Bolt	8
11	4380253	Roller , Lifter (DPF)	1
12	4380254	Brace , DPF A	1
13	4380255	Brace , DPF B	1
14	4380256	Brace , DPF C	1
15	4380257	Brace , DPF C	1
16	1599448	Bolt	2
17	2068378	Nut	8

TURBOCHARGER (FIGURE 3-22)
2.1L WITH DOC

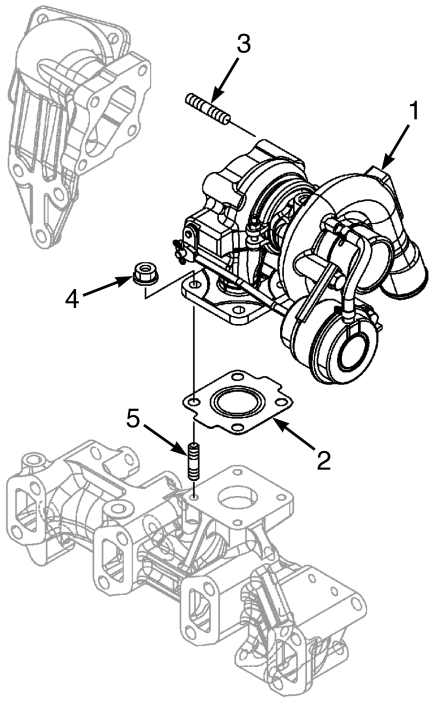

BP092051

ITEM	PART NO.	DESCRIPTION	QTY
	4667872	Engine Assy-Diesel (2.1L - w/ CAC w/DOC)	1
1	4380259	Turbocharger	1
2	4380260	Gasket	1
3	4646841	Bolt	4
4	2068378	Nut (DOC)	4
5	4380242	Stud	4

©2026 HYSTER COMPANY

4 ENGINE ASSEMBLY - YANMAR 2.2L LPG

SECTION 4
ENGINE ASSEMBLY - YANMAR 2.2L LPG

DESCRIPTION	PAGE
ALTERNATOR	4-30
HIGH OUTPUT	4-32
CAMSHAFT AND IDLE GEAR	4-14
CRANKSHAFT AND PISTON	4-12
CYLINDER BLOCK	4-4
CYLINDER HEAD AND COVER	4-10
ELECTRICAL PARTS	4-34
ENGINE MOUNTING AND TORQUE CONVERTER	4-2
EXHAUST MANIFOLD	4-18
FLYWHEEL AND HOUSING	4-8
FUEL RAIL AND INJECTOR ASSEMBLY	
BI FUEL	4-26
LPG	4-24
GEAR HOUSING	4-6
INTAKE MANIFOLD	4-16
OIL SYSTEM	4-20
STARTER	4-28
WATER PUMP AND COOLING BELT	4-22

©2026 HYSTER COMPANY

ENGINE MOUNTING AND TORQUE CONVERTER (FIGURE 4-1)

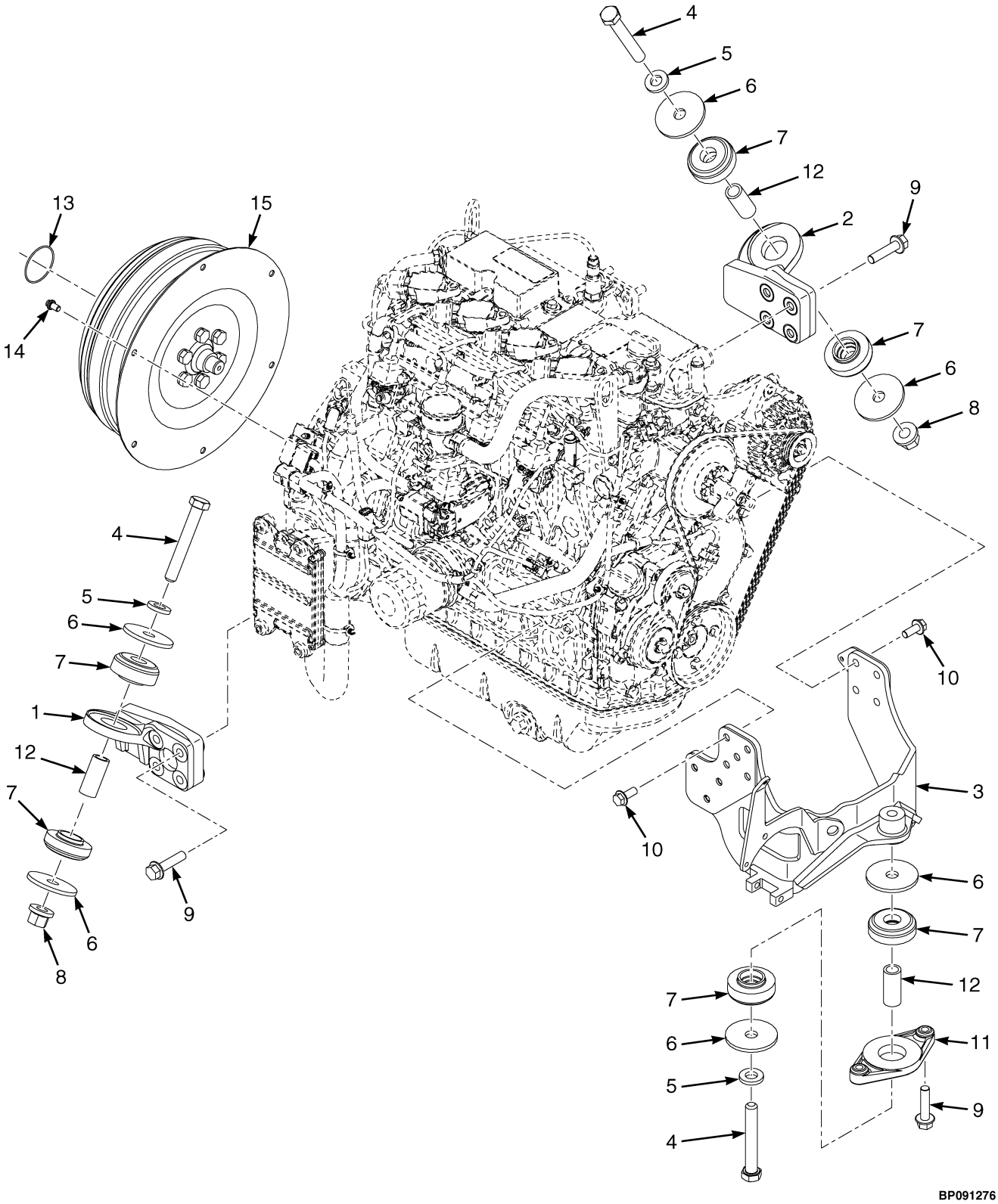

©2026 HYSTER COMPANY

ENGINE MOUNTING AND TORQUE CONVERTER

ITEM	PART NO.	DESCRIPTION	QTY
1	4307301	Motor Mount (LH)	1
2	4306703	Motor Mount (RH)	1
3	4307528	Motor Mount (Rear)	1
3	4307212	Motor Mount (Rear, w/ A/C)	1
4	293696	Capscrew	3
5	1504075	Washer	3
6	4306702	Washer	6
7	4328797	Isolator	6
7	4341756	Isolator (Alternate Part)	6
8	1565453	Nut (Flange)	2
8	4328840	Nut (w/ retainer, engine mount) (Alternate Part)	2
9	1665557	Capscrew	10
10	4043636	Capscrew	8
11	4308533	Mount - Rear Adapter	1
12	4328796	Spacer	3
13	140465	O-Ring	1
14	4676480	Capscrew	6
15	4232917	Torque Converter	1

©2026 HYSTER COMPANY

CYLINDER BLOCK (FIGURE 4-2)

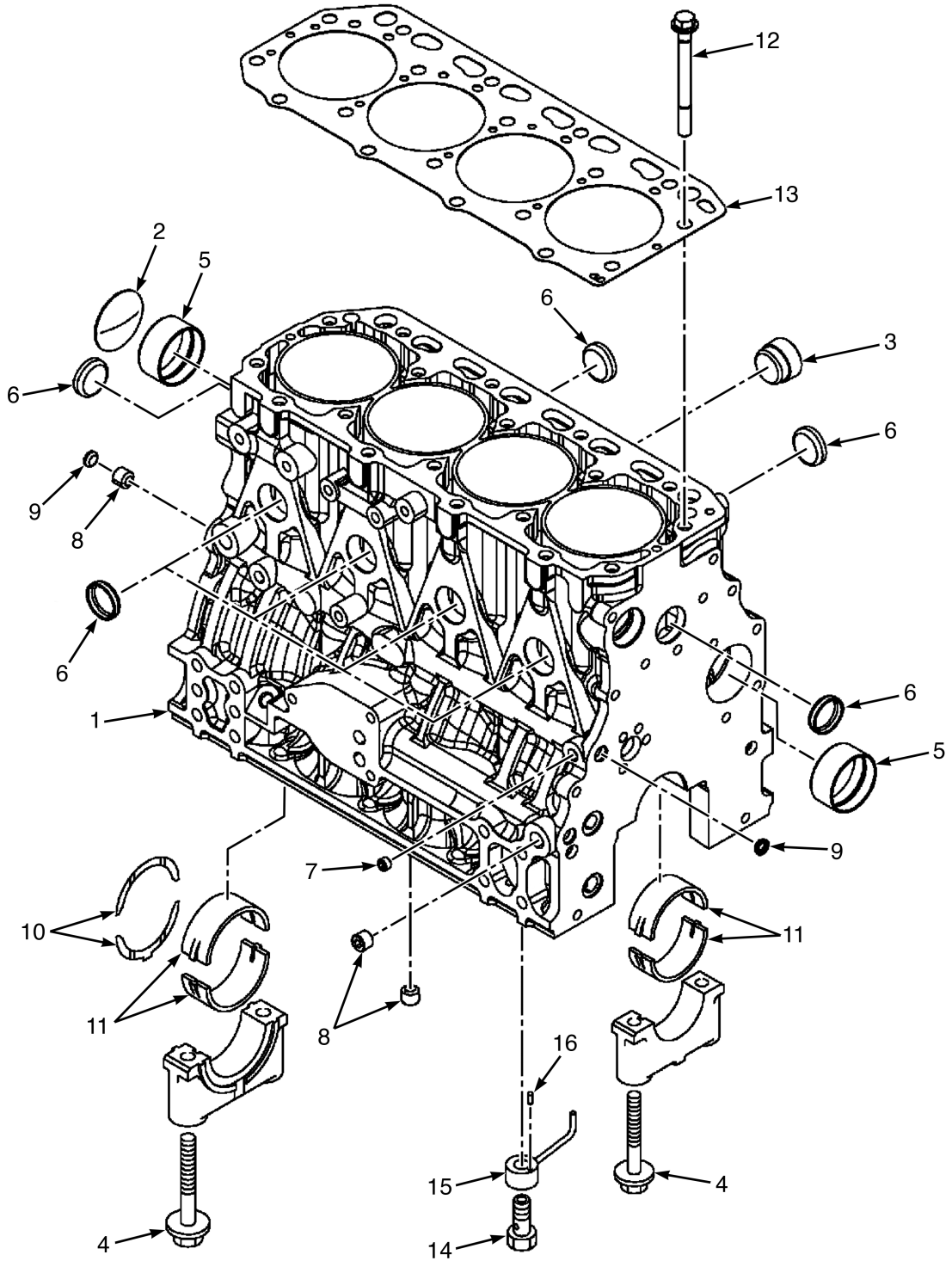

BP091260

©2026 HYSTER COMPANY

CYLINDER BLOCK

ITEM	PART NO.	DESCRIPTION	QTY
	4667917	Engine Assy-LPG (2.2L - Certified)	1
	4671903	Engine Assy-BI-Fuel (2.2L- Certified)	1
	4742992	Engine Assy-Bi-Fuel (Yanmar 2.2L) (Alternate Part)	1
	4671959	Engine Assy-BI-Fuel (2.2L - Non Certified)	1
	4671902	Engine Assy-LPG (2.2L - Non Certified)	1
	4741920	Engine Assy-LPG (2.2L - Certified, HST)	1
1	4303028	Cylinder Block	1
2	4303008	Plug	1
3	1599442	Plug	1
4	4303009	Bolt	10
5	4303010	Bushing (Camshaft)	2
6	4303011	Plug	8
7	4303012	Plug	1
8	4303013	Plug	3
9	4303014	Plug	2
10	4303016	Thrust Bearing	2
10	4303020	Thrust Bearing (Oversized - 0.25) (Optional)	2
11	4303018	Bearing (Camshaft)	5
11	4303019	Bearing (Undersize - 0.25) (Optional)	5
12	4303015	Bolt	18
13	4303029	Cylinder Head Gasket	1
14	4303030	Check Valve	4
15	4303031	Nozzle	4
16	4303230	Pin	4

©2026 HYSTER COMPANY

GEAR HOUSING (FIGURE 4-3)

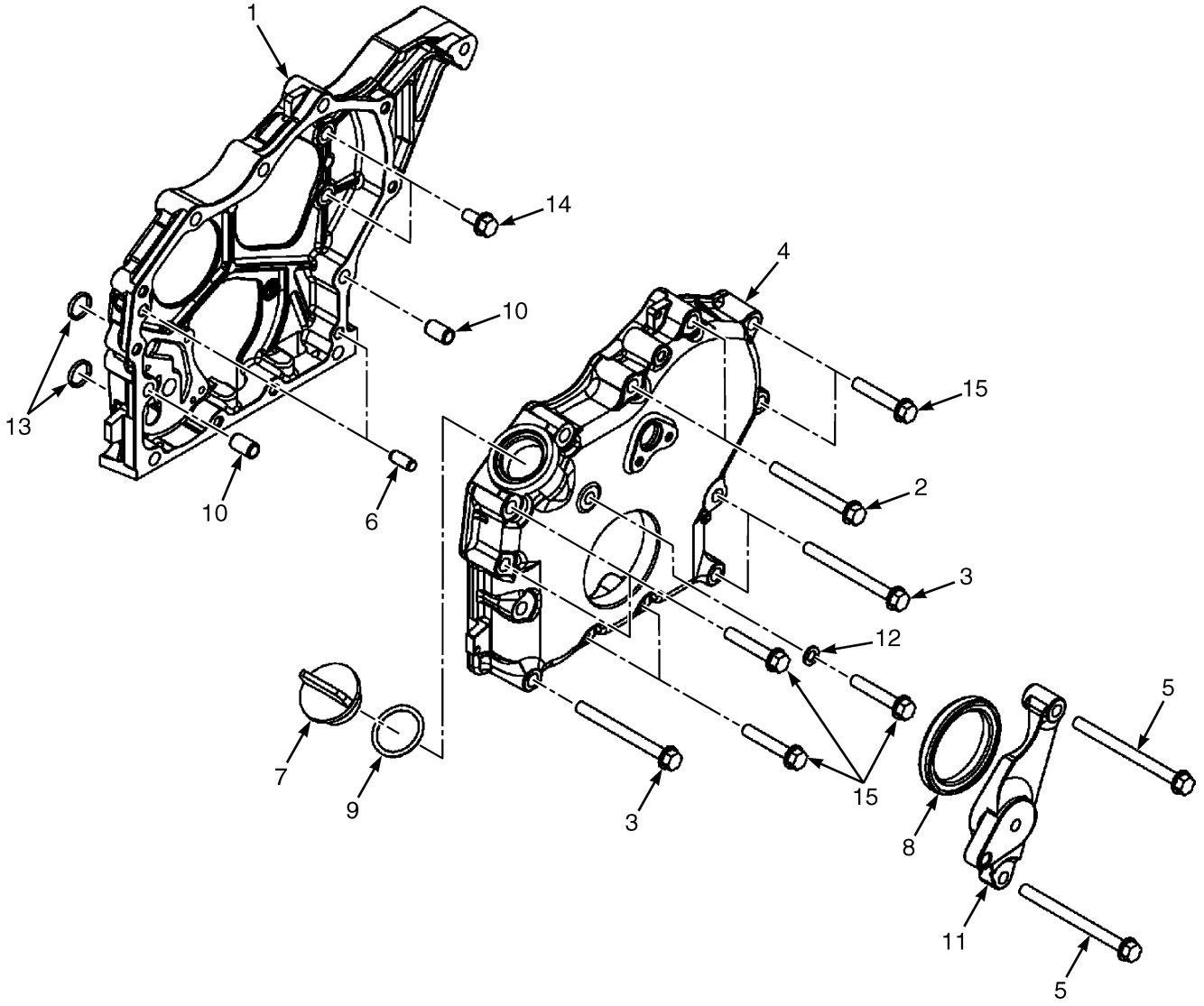

BP091261

©2026 HYSTER COMPANY

GEAR HOUSING

ITEM	PART NO.	DESCRIPTION	QTY
	4667917	Engine Assy-LPG (2.2L - Certified)	1
	4671903	Engine Assy-BI-Fuel (2.2L- Certified)	1
	4742992	Engine Assy-Bi-Fuel (Yanmar 2.2L) (Alternate Part)	1
	4671959	Engine Assy-BI-Fuel (2.2L - Non Certified)	1
	4671902	Engine Assy-LPG (2.2L - Non Certified)	1
	4741920	Engine Assy-LPG (2.2L - Certified, HST)	1
1	4303231	Case (Gear Case)	1
2	4122593	Bolt	2
3	4680489	Bolt	3
4	4303232	Cover	1
5	4303236	Bolt	2
6	1599458	Pin	2
7	1599463	Cap (Oil Fill)	1
8	4303026	Seal (Oil Seal)	1
9	4303233	O-Ring	1
10	4303022	Pipe (Knock)	2
11	4303234	Bracket (Tensioner)	1
12	1599445	Washer	1
13	4303235	O-Ring	2
14	1599470	Bolt	3
15	1599475	Bolt	7

©2026 HYSTER COMPANY

FLYWHEEL AND HOUSING (FIGURE 4-4)

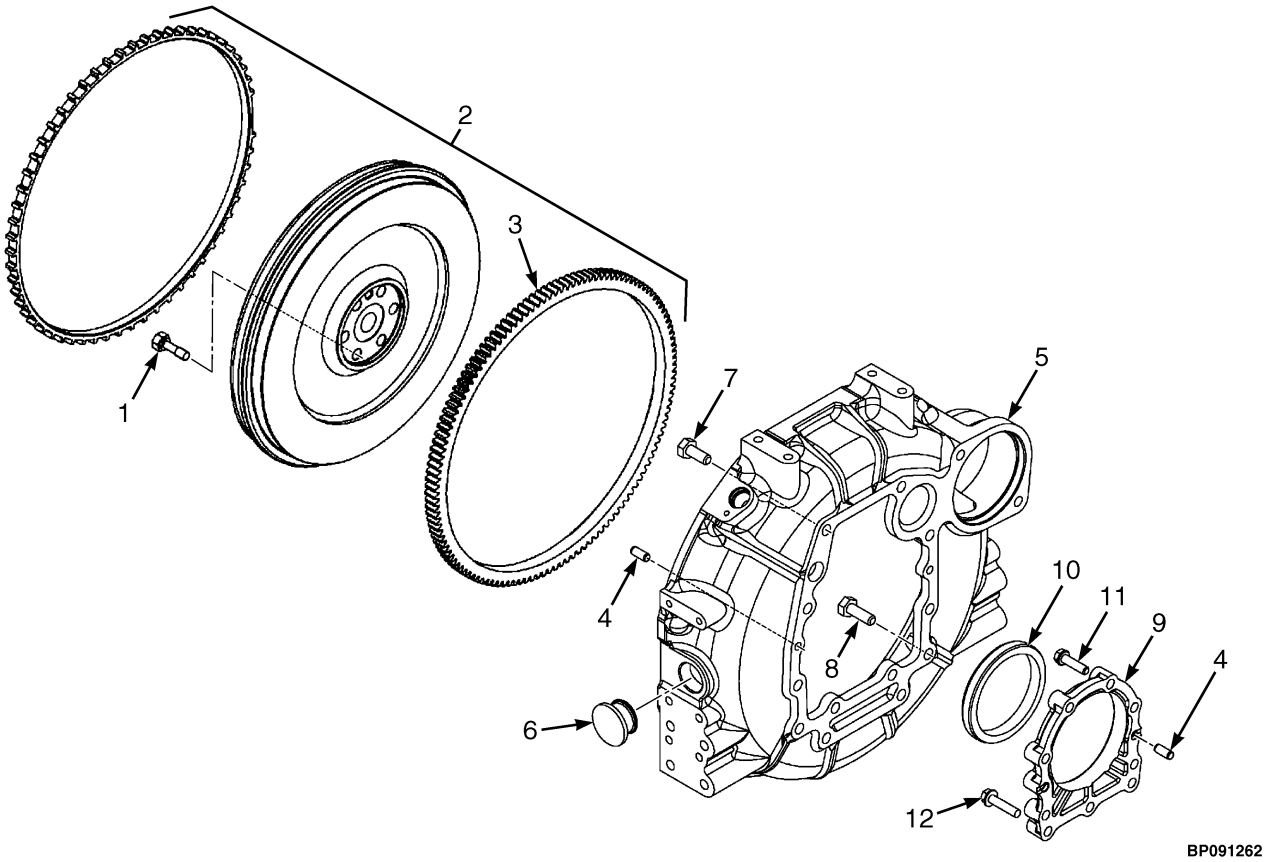

ITEM	PART NO.	DESCRIPTION	QTY
	4667917	Engine Assy-LPG (2.2L - Certified)	1
	4671903	Engine Assy-BI-Fuel (2.2L- Certified)	1
	4742992	Engine Assy-Bi-Fuel (Yanmar 2.2L) (Alternate Part)	1
	4671959	Engine Assy-BI-Fuel (2.2L - Non Certified)	1
	4671902	Engine Assy-LPG (2.2L - Non Certified)	1
	4741920	Engine Assy-LPG (2.2L - Certified, HST)	1
1	4303237	Bolt	6
2	4303238	Flywheel (Assembly)	1
3	4303239	Gear	1
4	1599458	Pin	4
5	4303246	Housing (Flywheel)	1
6	4303247	Cap (Wheel Cover)	1
7	2084313	Bolt	6
8	4303248	Bolt	4
9	4303249	Case (Oil Seal Case Assembly)	1
10	4304448	Seal	1
11	1599485	Bolt	6
12	1719968	Bolt	3

©2026 HYSTER COMPANY

NOTES

CYLINDER HEAD AND COVER (FIGURE 4-5)

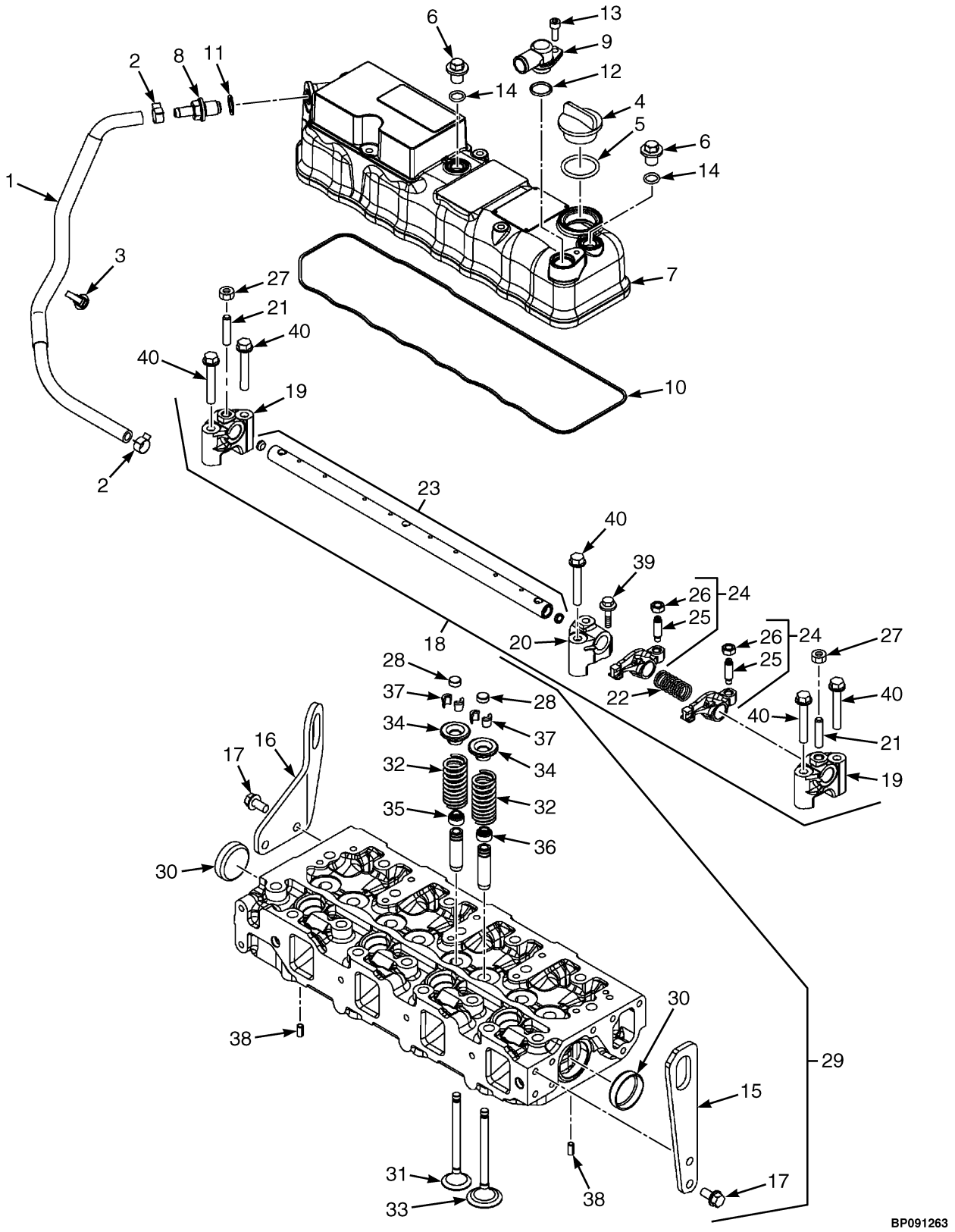

©2026 HYSTER COMPANY

CYLINDER HEAD AND COVER

ITEM	PART NO.	DESCRIPTION	QTY
	4667917	Engine Assy-LPG (2.2L - Certified)	1
	4671903	Engine Assy-BI-Fuel (2.2L- Certified)	1
	4742992	Engine Assy-Bi-Fuel (Yanmar 2.2L) (Alternate Part)	1
	4671959	Engine Assy-BI-Fuel (2.2L - Non Certified)	1
	4671902	Engine Assy-LPG (2.2L - Non Certified)	1
	4741920	Engine Assy-LPG (2.2L - Certified, HST)	1
1	4304489	Hose Assy (Breather)	1
2	4304490	Clamp	2
3	4304491	Clip	1
4	1599463	Cap (Oil Fill)	1
5	4303233	O-Ring	1
6	1599544	Plug	3
7	4304493	Hood (Assembly)	1
8	4304494	Valve (PCV)	1
9	4304495	Joint (Breather)	1
10	4304496	Gasket	1
11	4304497	Gasket	1
12	4304498	O-Ring	1
13	4304499	Bolt	1
14	4304500	O-Ring	1
15	4304472	Valve Lifter	1
16	4304473	Valve Lifter	1
17	1599470	Bolt	4
18	4304474	Shaft (Rocker Shaft Assembly)	1
19	4304475	Support (Rocker A)	2
20	4304476	Support (Rocker B)	3
21	4304477	Bolt (Stud)	3
22	4304478	Spring (Shaft)	4
23	4304479	Shaft (Rocker Shaft Assembly)	1
24	4304480	Arm (Rocker)	8
25	1599536	Screw	8
26	1599537	Nut	8
27	4304481	Nut	3
28	1599521	Cap	8
29	4304482	Cylinder Head (Assembly) (LPG)	1
29	4367144	Cylinder Head (Bi-Fuel)	1
30	1599528	Plug	2
31	4304483	Valve (Exhaust)	4
32	4304484	Spring	8
33	4304485	Valve (Intake)	4
34	1599518	Retainer	8
35	4304486	Seal (Valve Stem)	4
36	4304487	Seal (Valve Stem)	4
37	1599529	Retainer	8
38	1599446	Pin 6x12	2
39	1599801	Bolt	3
40	4304488	Bolt	7

©2026 HYSTER COMPANY

CRANKSHAFT AND PISTON (FIGURE 4-6)

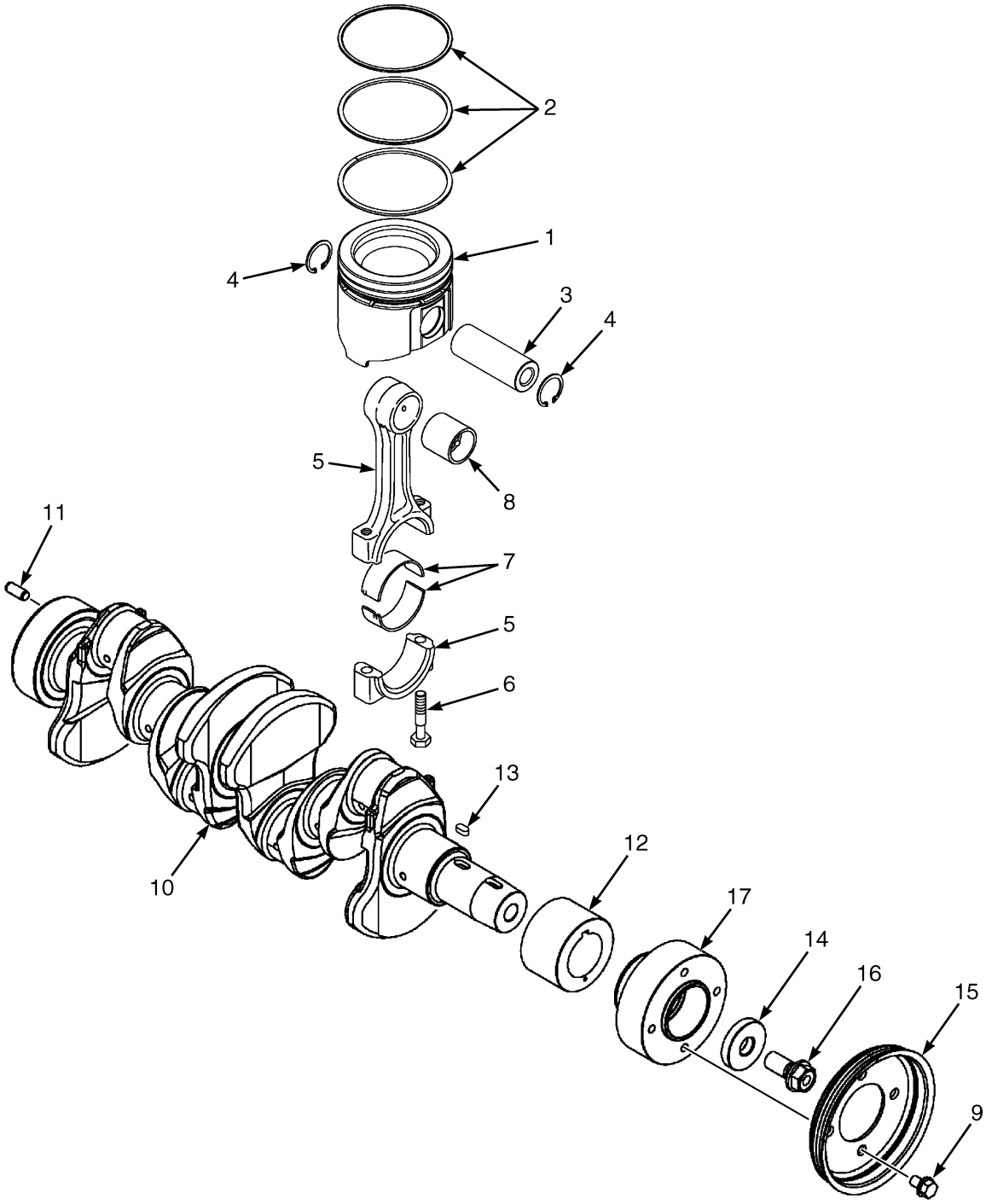

BP091264

©2026 HYSTER COMPANY

CRANKSHAFT AND PISTON

ITEM	PART NO.	DESCRIPTION	QTY
	4667917	Engine Assy-LPG (2.2L - Certified)	1
	4671903	Engine Assy-BI-Fuel (2.2L- Certified)	1
	4742992	Engine Assy-Bi-Fuel (Yanmar 2.2L) (Alternate Part)	1
	4671959	Engine Assy-BI-Fuel (2.2L - Non Certified)	1
	4671902	Engine Assy-LPG (2.2L - Non Certified)	1
	4741920	Engine Assy-LPG (2.2L - Certified, HST)	1
1	4304463	Piston (Assembly) (LPG)	4
1	4367140	Piston (Assembly) (Bi-Fuel)	4
2	4304464	Ring	4
3	4304465	Pin	4
4	4304466	Ring	8
5	4304458	Rod Assy	4
6	4304459	Bolt (Connecting Rod)	8
7	4304460	Pin (Metal Crank Pin Assembly)	4
7	4304462	Pin (Metal Crank Pin) (Oversized - 0.25) (Optional)	4
8	4304461	Pin (Metal Piston Pin)	4
9	1599448	Bolt	4
10	4304467	Crankshaft (Assembly)	1
11	1599458	Pin	1
12	4304468	Gear	1
13	1599574	Key	1
14	4304469	Washer	1
15	4304470	Crankshaft - V-Pulley	1
16	1599590	Bolt	1
17	4304471	Spacer	1

©2026 HYSTER COMPANY

CAMSHAFT AND IDLE GEAR (FIGURE 4-7)

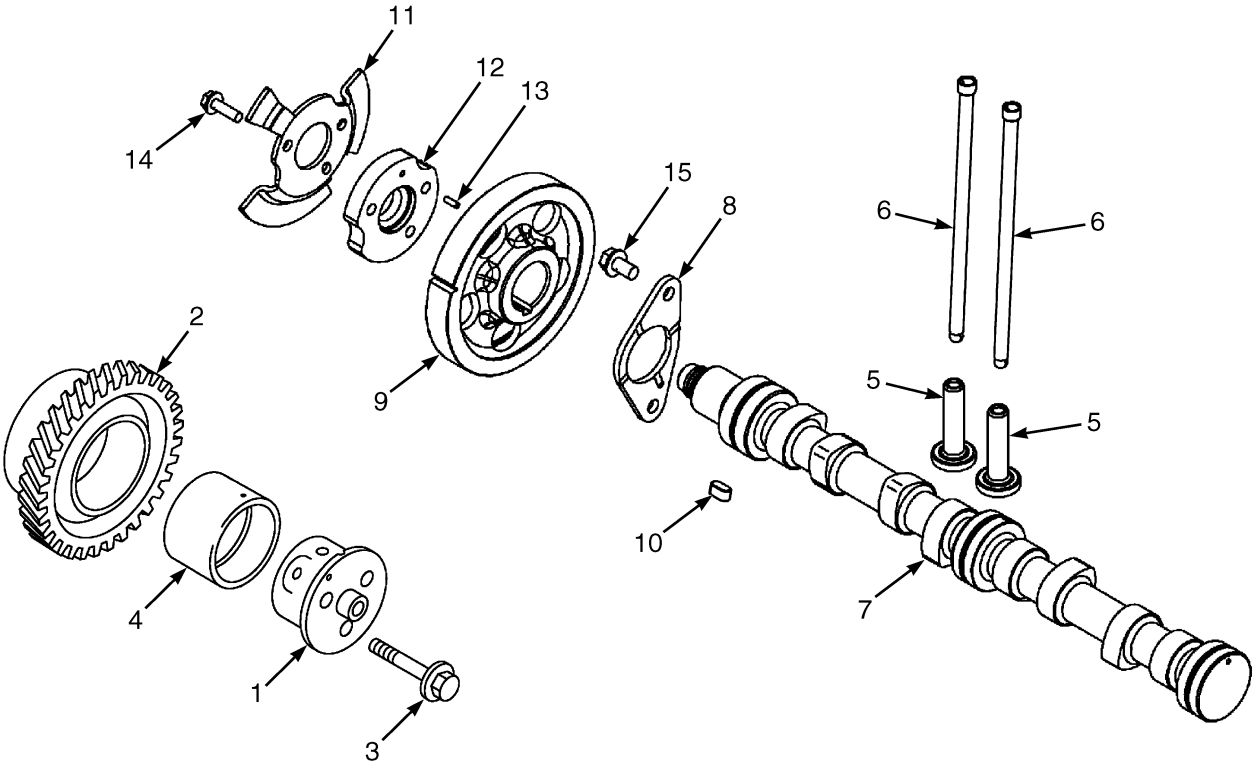

BP091265

ITEM	PART NO.	DESCRIPTION	QTY
	4667917	Engine Assy-LPG (2.2L - Certified)	1
	4671903	Engine Assy-BI-Fuel (2.2L- Certified)	1
	4742992	Engine Assy-Bi-Fuel (Yanmar 2.2L) (Alternate Part)	1
	4671959	Engine Assy-BI-Fuel (2.2L - Non Certified)	1
	4671902	Engine Assy-LPG (2.2L - Non Certified)	1
	4741920	Engine Assy-LPG (2.2L - Certified, HST)	1
1	4304449	Shaft (Idle Gear)	1
2	4304450	Gear	1
3	1599473	Bolt	3
4	4304451	Bushing (Idle Gear)	1
5	1599569	Tappet	8
6	4304452	Rod	8
7	4304453	Camshaft (Assembly)	1
8	1599572	Retainer	1
9	4304454	Gear	1
10	1599574	Key	1
11	4304455	Camshaft (Pulser)	1
12	4304456	Spacer	1
13	4303230	Pin	1
14	1599816	Bolt	3
15	1599568	Bolt	2

©2026 HYSTER COMPANY

NOTES

INTAKE MANIFOLD (FIGURE 4-8)

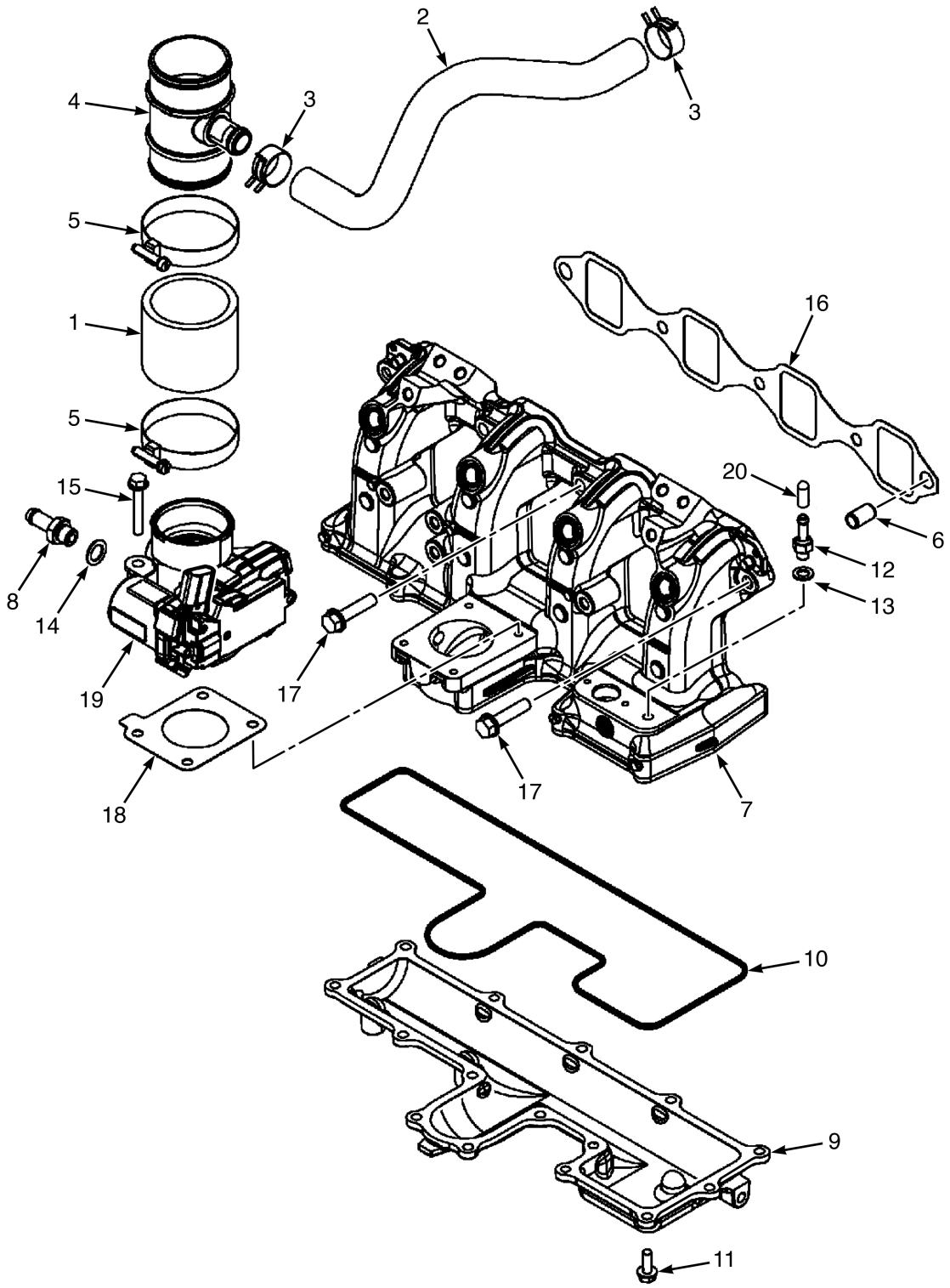

©2026 HYSTER COMPANY

INTAKE MANIFOLD

ITEM	PART NO.	DESCRIPTION	QTY
	4667917	Engine Assy-LPG (2.2L - Certified)	1
	4671903	Engine Assy-BI-Fuel (2.2L- Certified)	1
	4742992	Engine Assy-Bi-Fuel (Yanmar 2.2L) (Alternate Part)	1
	4671959	Engine Assy-BI-Fuel (2.2L - Non Certified)	1
	4671902	Engine Assy-LPG (2.2L - Non Certified)	1
	4741920	Engine Assy-LPG (2.2L - Certified, HST)	1
1	4304501	Hose (Air Intake)	1
2	4304502	Hose Assy (Fresh Air)	1
3	4304503	Clamp	2
4	4304504	Joint (Throttle)	1
5	4304505	Clamp	2
6	4303022	Pipe (Knock)	2
7	4304506	Manifold Assy (Intake)	1
7	4304508	Manifold (Intake, Upper)	1
8	4304507	Joint	1
9	4304509	Manifold (Intake, Lower)	1
10	4304510	Packing	1
11	4122584	Bolt	15
12	4304511	Joint	1
13	1599445	Washer	1
14	1600086	Seal	1
15	4122588	Bolt	4
16	4304512	Gasket	1
17	1719968	Bolt	5
18	4304513	Gasket	1
19	4304514	Fuel And Throttle Assy	1
20	4367976	Fuel Cap	1

©2026 HYSTER COMPANY

EXHAUST MANIFOLD (FIGURE 4-9)

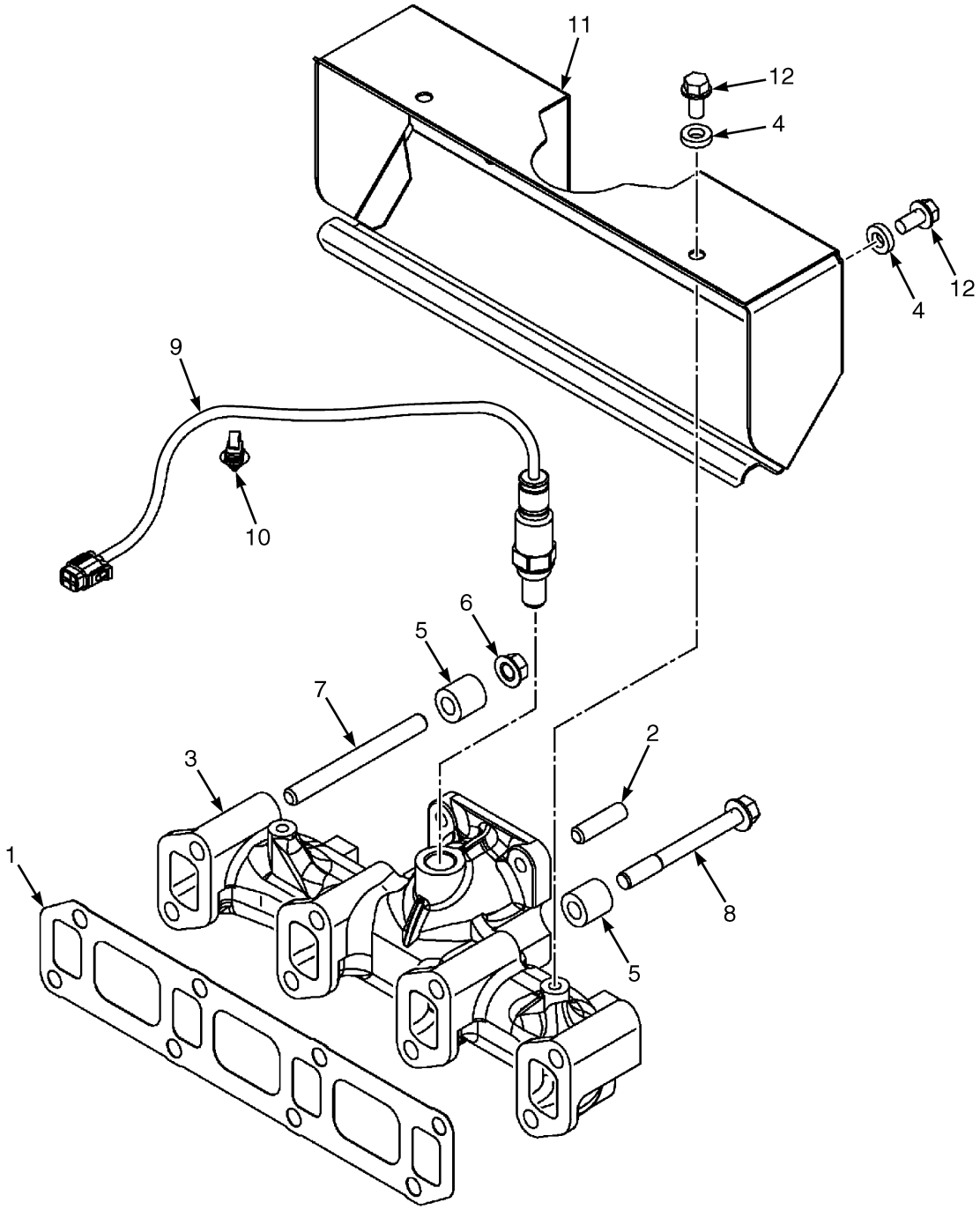

BP091267

©2026 HYSTER COMPANY

EXHAUST MANIFOLD

ITEM	PART NO.	DESCRIPTION	QTY
	4667917	Engine Assy-LPG (2.2L - Certified)	1
	4671903	Engine Assy-BI-Fuel (2.2L- Certified)	1
	4742992	Engine Assy-Bi-Fuel (Yanmar 2.2L) (Alternate Part)	1
	4671959	Engine Assy-BI-Fuel (2.2L - Non Certified)	1
	4671902	Engine Assy-LPG (2.2L - Non Certified)	1
	4741920	Engine Assy-LPG (2.2L - Certified, HST)	1
1	4304515	Gasket (Manifold)	1
2	4304516	Stud	4
3	4304517	Manifold	1
4	4304518	Washer	4
5	4304519	Spacer (Bolt)	8
6	4304520	Nut	2
7	4304521	Stud	2
8	4304522	Bolt	6
9	4304523	Sensor (Oxygen)	1
10	4304524	Clip	1
11	4304525	Insulator	1
12	1599470	Bolt	4

©2026 HYSTER COMPANY

OIL SYSTEM (FIGURE 4-10)

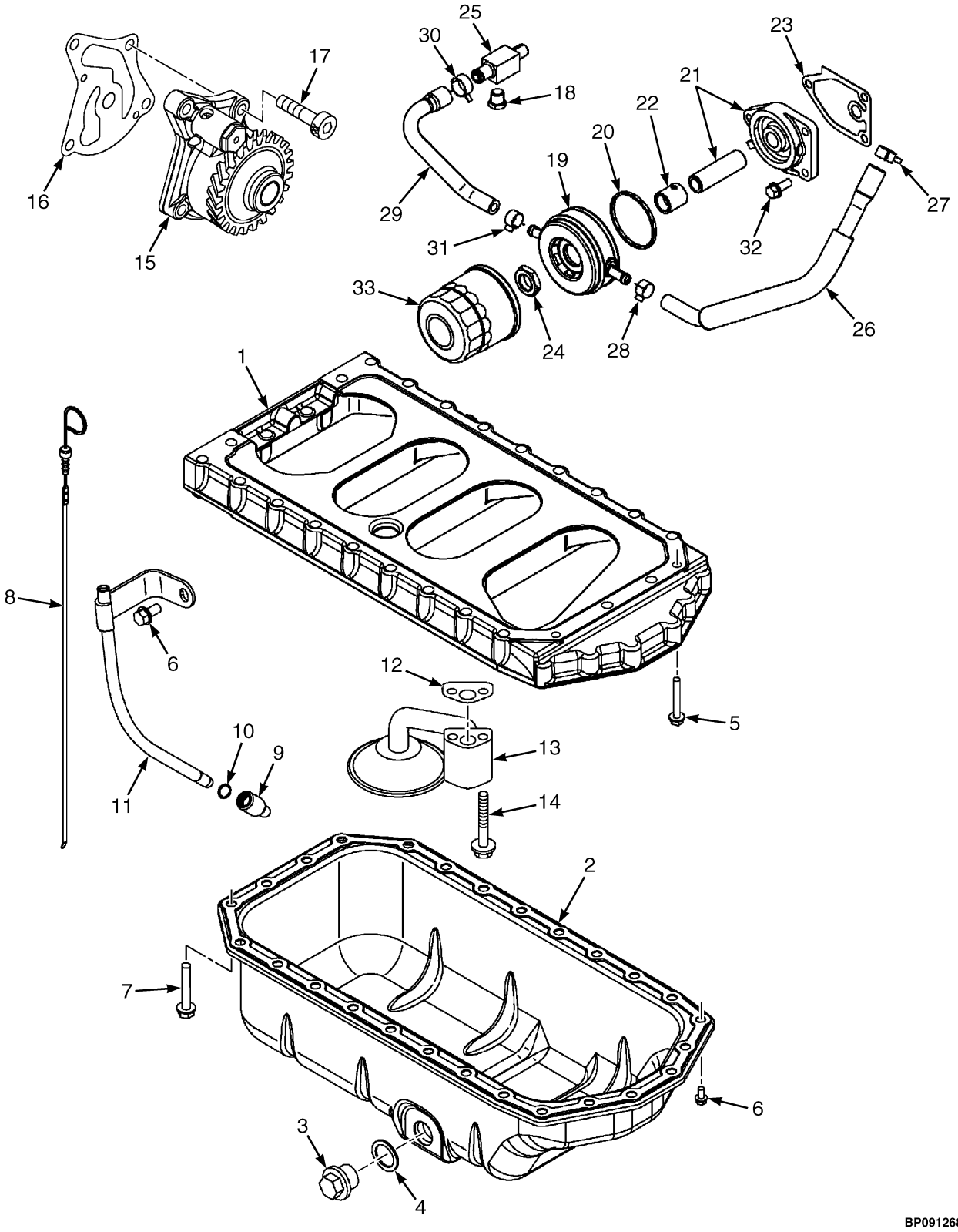

©2026 HYSTER COMPANY

OIL SYSTEM

ITEM	PART NO.	DESCRIPTION	QTY
	4667917	Engine Assy-LPG (2.2L - Certified)	1
	4671903	Engine Assy-BI-Fuel (2.2L- Certified)	1
	4671959	Engine Assy-BI-Fuel (2.2L - Non Certified)	1
	4671902	Engine Assy-LPG (2.2L - Non Certified)	1
	4741920	Engine Assy-LPG (2.2L - Certified, HST)	1
	4742992	Engine Assy-Bi-Fuel (Yanmar 2.2L) (Alternate Part)	1
1	4303240	Spacer (Oil Pan)	1
2	4303241	Oil Pan	1
3	1599480	Drain Plug	1
4	1599481	Oil Seal	1
5	4122588	Bolt	2
6	1599470	Bolt	9
7	1599475	Bolt	22
8	4303242	Dipstick	1
9	1599605	Guide	1
10	4068201	O-Ring	1
11	4303243	Guide (Dipstick)	1
12	4303244	Gasket	1
13	4303245	Pipe (Oil Inlet)	1
14	1599579	Bolt	2
15	4304526	Oil Pump (Assembly)	1
16	4304527	Gasket	1
17	1599908	Bolt	4
18	1599802	Drain Plug (LPG)	1
18	4367142	Drain Plug (Bi-Fuel)	1
19	4304528	Oil Cooler	1
20	4304529	Gasket	1
21	4304530	Bracket	1
21	4304531	Bracket	1
21	4304532	Stud	1
22	4304533	Collar	1
23	4304534	Gasket	1
24	4304535	Nut	1
25	4304536	Joint	1
26	4304537	Hose Assy	1
27	4304538	Clamp	1
28	4304539	Clamp	1
29	4304540	Hose Assy	1
30	4304538	Clamp	1
31	4304539	Clamp	1
32	1599471	Bolt	3
33	2077983	Oil Filter	1

©2026 HYSTER COMPANY

WATER PUMP AND COOLING BELT (FIGURE 4-11)

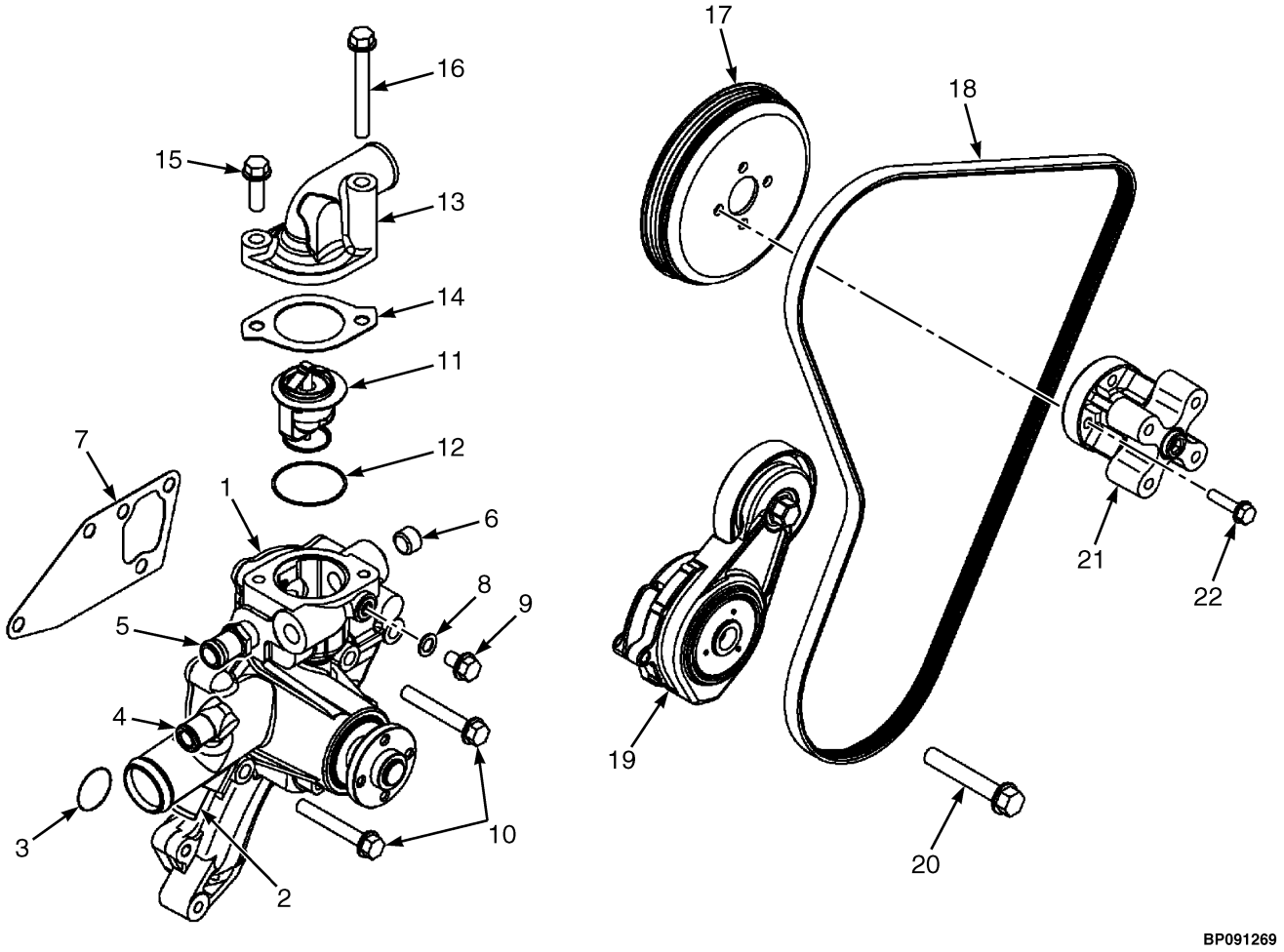

©2026 HYSTER COMPANY

WATER PUMP AND COOLING BELT

ITEM	PART NO.	DESCRIPTION	QTY
	4667917	Engine Assy-LPG (2.2L - Certified)	1
	4671903	Engine Assy-BI-Fuel (2.2L- Certified)	1
	4742992	Engine Assy-Bi-Fuel (Yanmar 2.2L) (Alternate Part)	1
	4671959	Engine Assy-BI-Fuel (2.2L - Non Certified)	1
	4671902	Engine Assy-LPG (2.2L - Non Certified)	1
	4741920	Engine Assy-LPG (2.2L - Certified, HST)	1
1	4304544	Pump (Water)	1
2	4304545	Joint	1
3	4304546	O-Ring	1
4	4268731	Elbow	1
5	4304547	Joint	1
6	2084330	Drain Plug	1
7	4304543	Gasket	1
8	4122570	Gasket	1
9	1599448	Bolt	1
10	1599579	Bolt	4
11	4304548	Thermostat	1
12	4304549	Gasket	1
13	4304550	Cover (Thermostat)	1
14	4304551	Gasket	1
15	1599801	Bolt	1
16	4304552	Bolt	1
17	4304553	Pulley	1
18	4304554	Belt	1
19	4304555	Tensioner	1
20	4304556	Bolt	1
21	4304557	Spacer	1
22	4122585	Bolt	4

©2026 HYSTER COMPANY

FUEL RAIL AND INJECTOR ASSEMBLY (FIGURE 4-12)

LPG

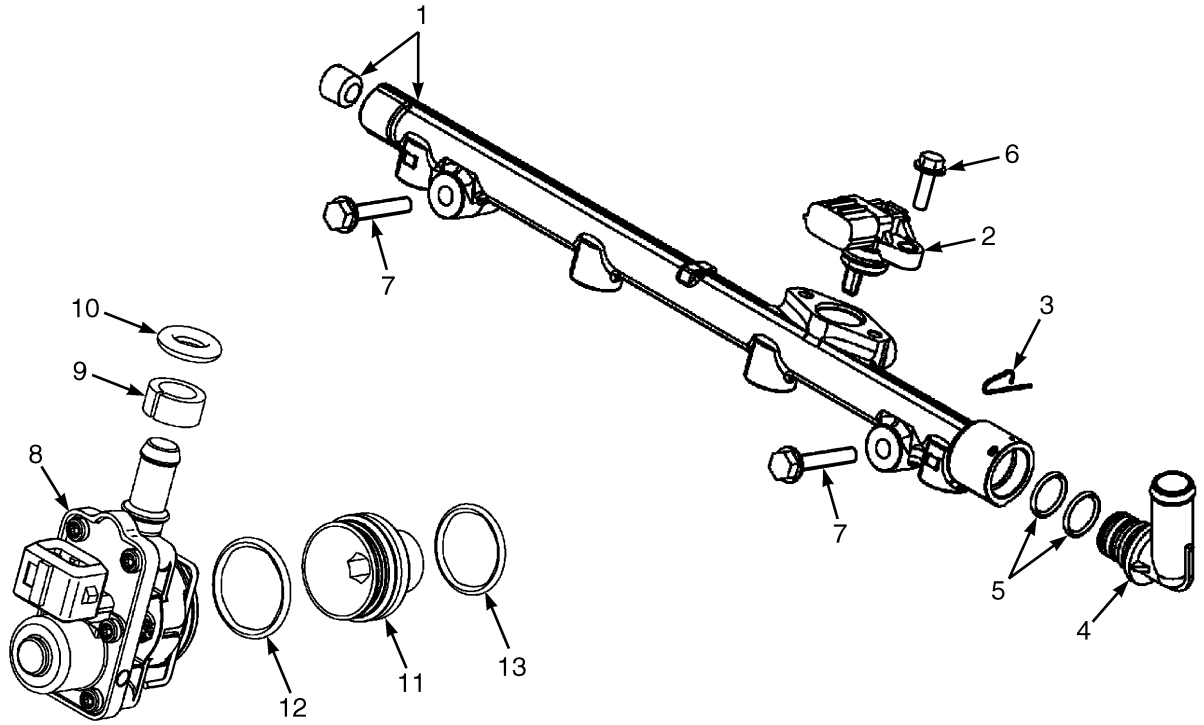

BP091270

ITEM	PART NO.	DESCRIPTION	QTY
	4667917	Engine Assy-LPG (2.2L - Certified)	1
	4671902	Engine Assy-LPG (2.2L - Non Certified)	1
	4741920	Engine Assy-LPG (2.2L - Certified, HST)	1
1	4304558	Fuel Rail (Assembly)	1
2	4304559	Sensor (Temperature)	1
3	4304560	Pin	1
4	4304561	Joint	1
5	4304562	O-Ring	2
6	4304563	Bolt	2
7	4122587	Bolt	2
8	4304564	Injector	4
9	4304565	Spacer	4
10	4304566	O-Ring	4
11	4304567	Adapter	4
12	4304568	O-Ring	4
13	4304569	O-Ring	4

See Service Manual for service procedures.
©2026 HYSTER COMPANY

NOTES

FUEL RAIL AND INJECTOR ASSEMBLY (FIGURE 4-13)
BI FUEL

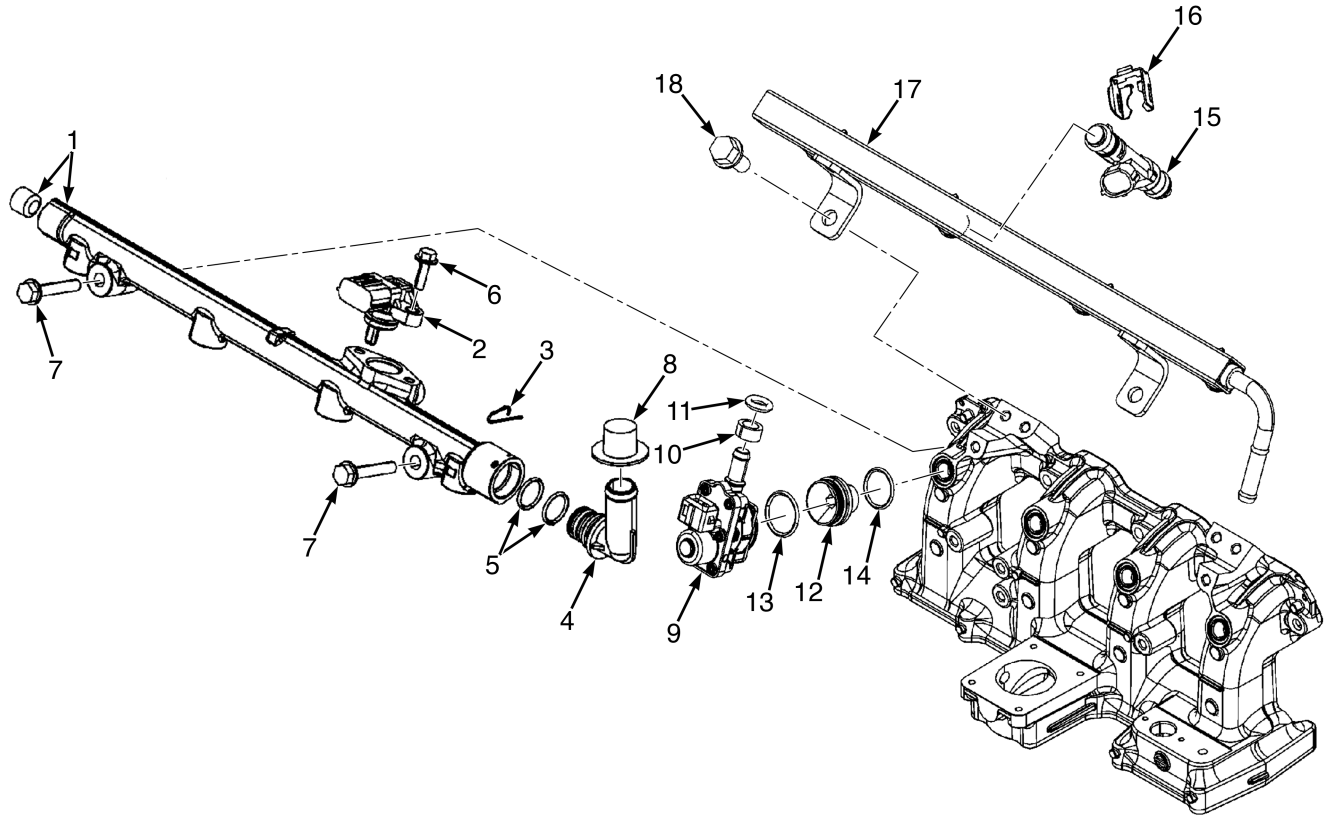

BP092196

©2026 HYSTER COMPANY

FUEL RAIL AND INJECTOR ASSEMBLY

BI FUEL

ITEM	PART NO.	DESCRIPTION	QTY
	4671903	Engine Assy-BI-Fuel (2.2L- Certified)	1
	4742992	Engine Assy-Bi-Fuel (Yanmar 2.2L) (Alternate Part)	1
	4671959	Engine Assy-BI-Fuel (2.2L - Non Certified)	1
1	4304558	Fuel Rail (Assembly)	1
2	4304559	Sensor (Temperature)	1
3	4304560	Pin	1
4	4304561	Joint	1
5	4304562	O-Ring	2
6	4304563	Bolt	2
7	4122587	Bolt	2
8	4367817	Capscrew	1
9	4304564	Injector	4
10	4304565	Spacer	4
11	4304566	O-Ring	4
12	4304567	Adapter	4
13	4304568	O-Ring	4
14	4304569	O-Ring	4
15	4367876	Injector (Gasoline)	4
16	4367877	Clip	4
17	4367878	Fuel Rail (Gasoline)	1
18	1599470	Bolt	2

©2026 HYSTER COMPANY

STARTER (FIGURE 4-14)

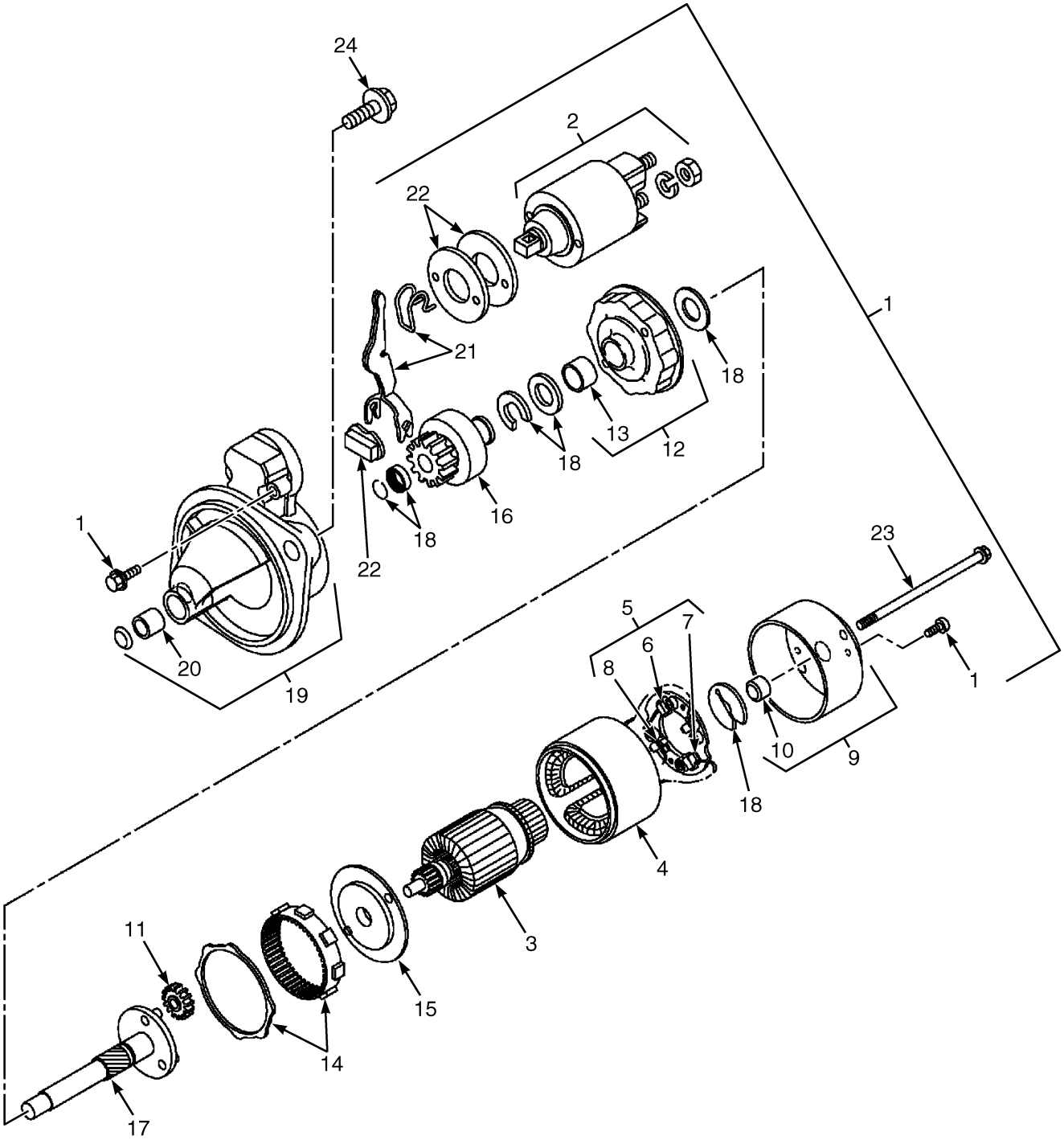

BP091257

©2026 HYSTER COMPANY

STARTER

ITEM	PART NO.	DESCRIPTION	QTY
	4667917	Engine Assy-LPG (2.2L - Certified)	1
	4671903	Engine Assy-BI-Fuel (2.2L- Certified)	1
	4742992	Engine Assy-Bi-Fuel (Yanmar 2.2L) (Alternate Part)	1
	4671959	Engine Assy-BI-Fuel (2.2L - Non Certified)	1
	4671902	Engine Assy-LPG (2.2L - Non Certified)	1
	4741920	Engine Assy-LPG (2.2L - Certified, HST)	1
1	4304570	Starter	1
2	4367879	Switch (Magnet Assembly)	1
3	. . . . .	Armature	1
4	. . . . .	Yoke	1
5	. . . . .	Brush Holder	1
6	. . . . .	Brush	2
7	. . . . .	Brush (Set)	1
8	. . . . .	Spring	4
9	. . . . .	Cover Assembly	1
10	. . . . .	Cover	1
11	4367880	Gear (Planetary)	3
12	. . . . .	Center Bracket	1
13	. . . . .	Bracket	1
14	. . . . .	Internal Gear	1
15	. . . . .	Bracket	1
16	. . . . .	Pinion	1
17	. . . . .	Pinion Shaft	1
18	. . . . .	Washer (Set)	1
19	. . . . .	Gear Case	1
20	. . . . .	Metal Starter	1
21	. . . . .	Shift Lever	1
22	. . . . .	Dust Cover Kit	1
23	4304592	Bolt	2
24	4122595	Bolt	2

©2026 HYSTER COMPANY

ALTERNATOR (FIGURE 4-15)

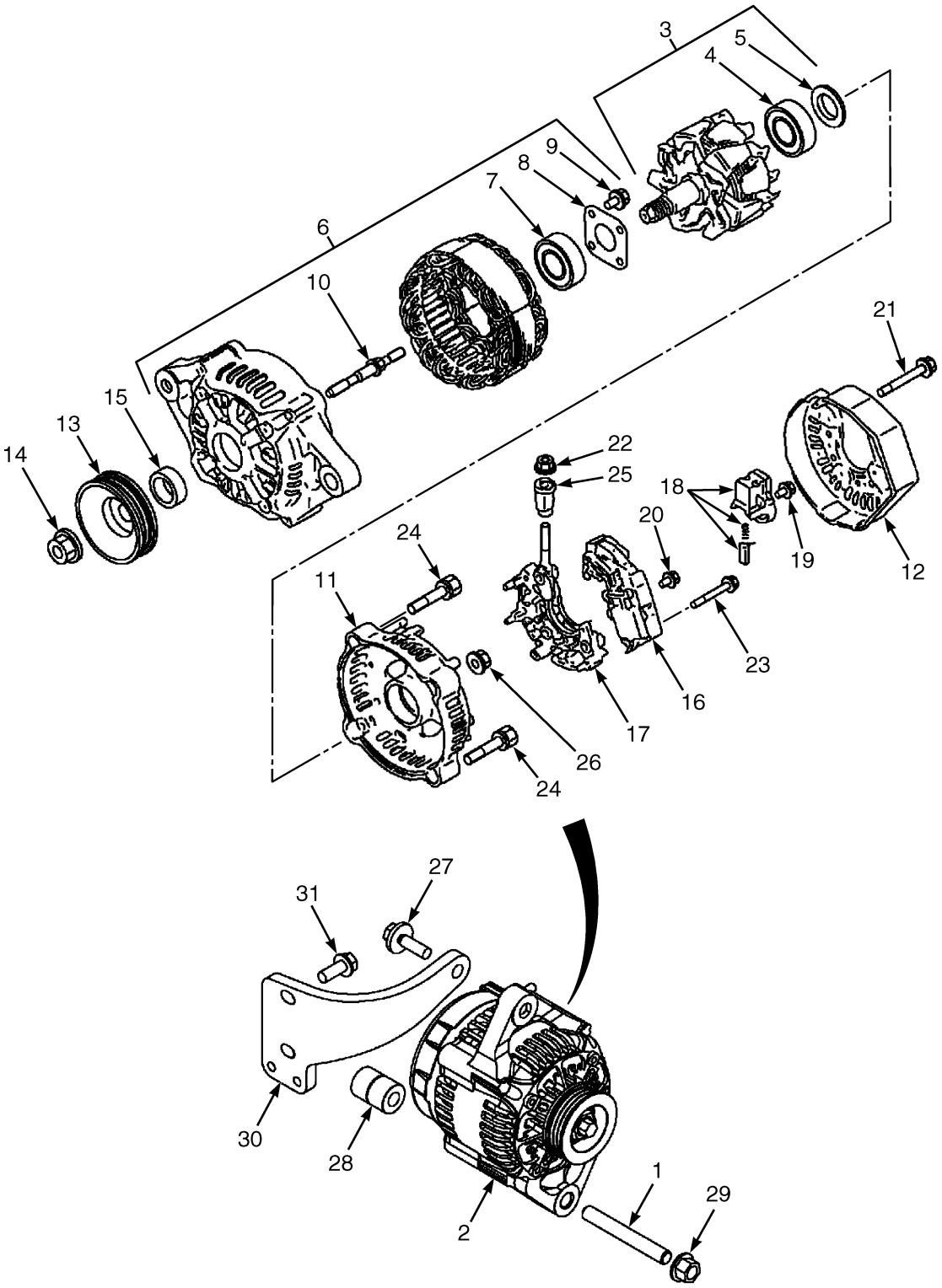

BP091271

©2026 HYSTER COMPANY

ALTERNATOR

ITEM	PART NO.	DESCRIPTION	QTY
	4667917	Engine Assy-LPG (2.2L - Certified)	1
	4671903	Engine Assy-BI-Fuel (2.2L- Certified)	1
	4742992	Engine Assy-Bi-Fuel (Yanmar 2.2L) (Alternate Part)	1
	4671959	Engine Assy-BI-Fuel (2.2L - Non Certified)	1
	4671902	Engine Assy-LPG (2.2L - Non Certified)	1
	4741920	Engine Assy-LPG (2.2L - Certified, HST)	1
1	4304593	Stud	1
2	4304594	Alternator (LPG)	1
2	4367937	Alternator (Bi-Fuel)	1
2	4304594	Alternator (Bi-Fuel) (Alternate Part)	1
3	1599877	Rotator Assembly (LPG)	1
3	4728697	Rotor (Assembly) (Bi-Fuel)	1
4	1599878	Ball Bearing	1
5	1599879	Cover	1
6	2084466	Housing Assembly	1
7	1599873	Ball Bearing	1
8	1599874	Plate	1
9	1599875	Screw	4
10	1599876	Stud	2
11	. . . . .	Frame (End)	1
12	2084469	Housing	1
13	4304596	Pulley (LPG)	1
14	. . . . .	Nut	1
15	. . . . .	Collar	1
16	. . . . .	Regulator Assembly	1
16	2084467	Holder	1
17	. . . . .	Holder Assembly	1
18	. . . . .	Brush Holder	1
19	. . . . .	Screw	6
20	. . . . .	Screw	1
21	. . . . .	Bolt	3
22	. . . . .	Nut	1
23	. . . . .	Screw with washer	2
24	. . . . .	Bolt	2
25	. . . . .	Insulating Bushing	1
26	. . . . .	Nut	2
27	1599896	Bolt	1
28	4304600	Spacer	1
29	1599542	Nut	1
30	4304601	Bracket	1
31	1599471	Bolt	2

©2026 HYSTER COMPANY

ALTERNATOR (FIGURE 4-16)
HIGH OUTPUT

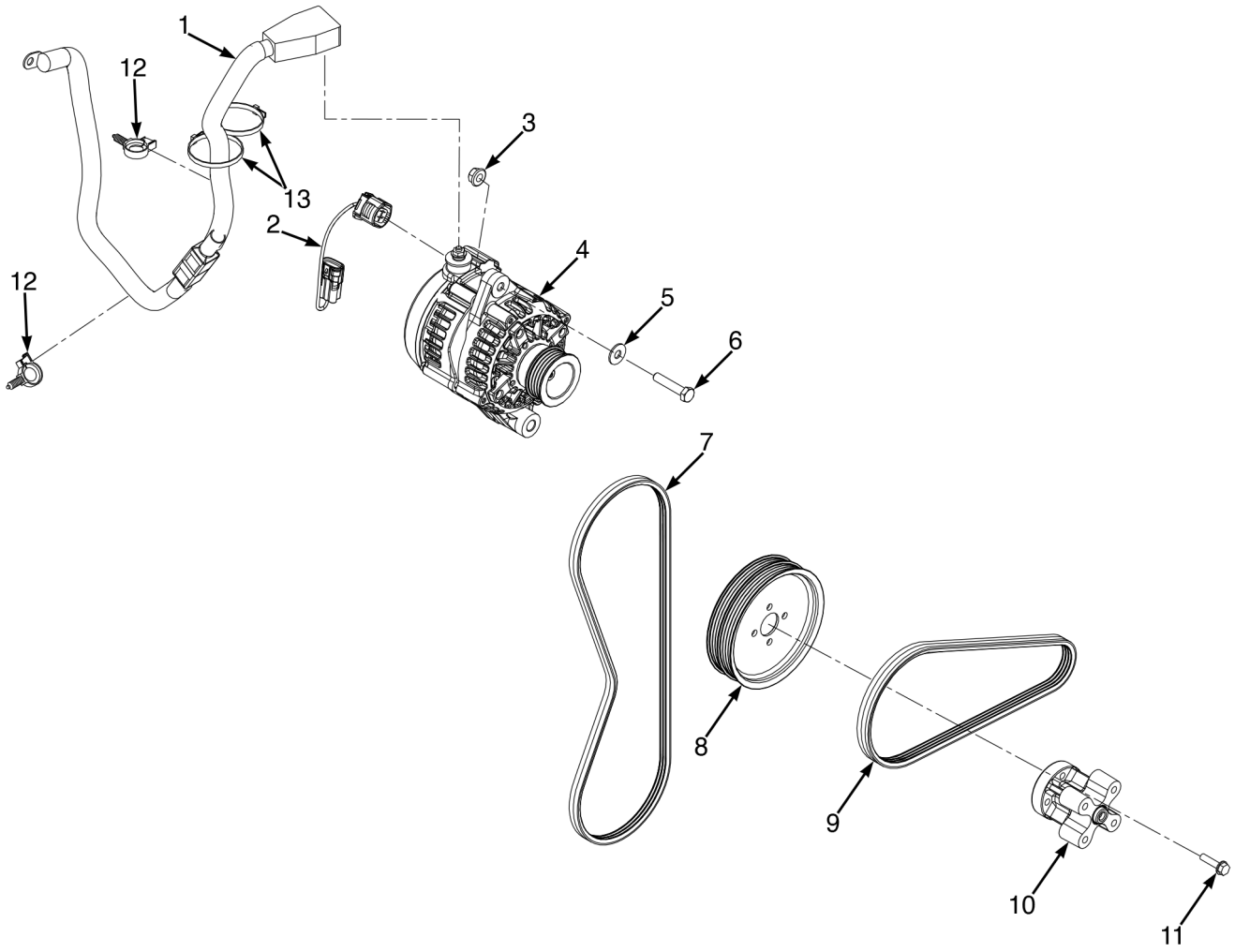

BP092220

©2026 HYSTER COMPANY

ALTERNATOR
HIGH OUTPUT

ITEM	PART NO.	DESCRIPTION	QTY
1	81017382	Power Cable (LPG Fuse Link) (☞Figure 11-141)	1
2	81018589	Wire Harness (Alternator Jumper)	1
3	~~1382472~~		
	1502543	Nut	1
4	4741325	Alternator (High Output)	1
5	320158	Washer	1
6	4622855	Capscrew	1
7	4740895	Belt	1
8	4392808	Water Pump Pulley (High Output Alternator)	1
9	4740894	Belt	1
10	4304557	Spacer	1
11	4122585	Bolt	4
12	1509890	Clip	2
13	2004005	Strap Clamp	2

©2026 HYSTER COMPANY

ELECTRICAL PARTS (FIGURE 4-17)

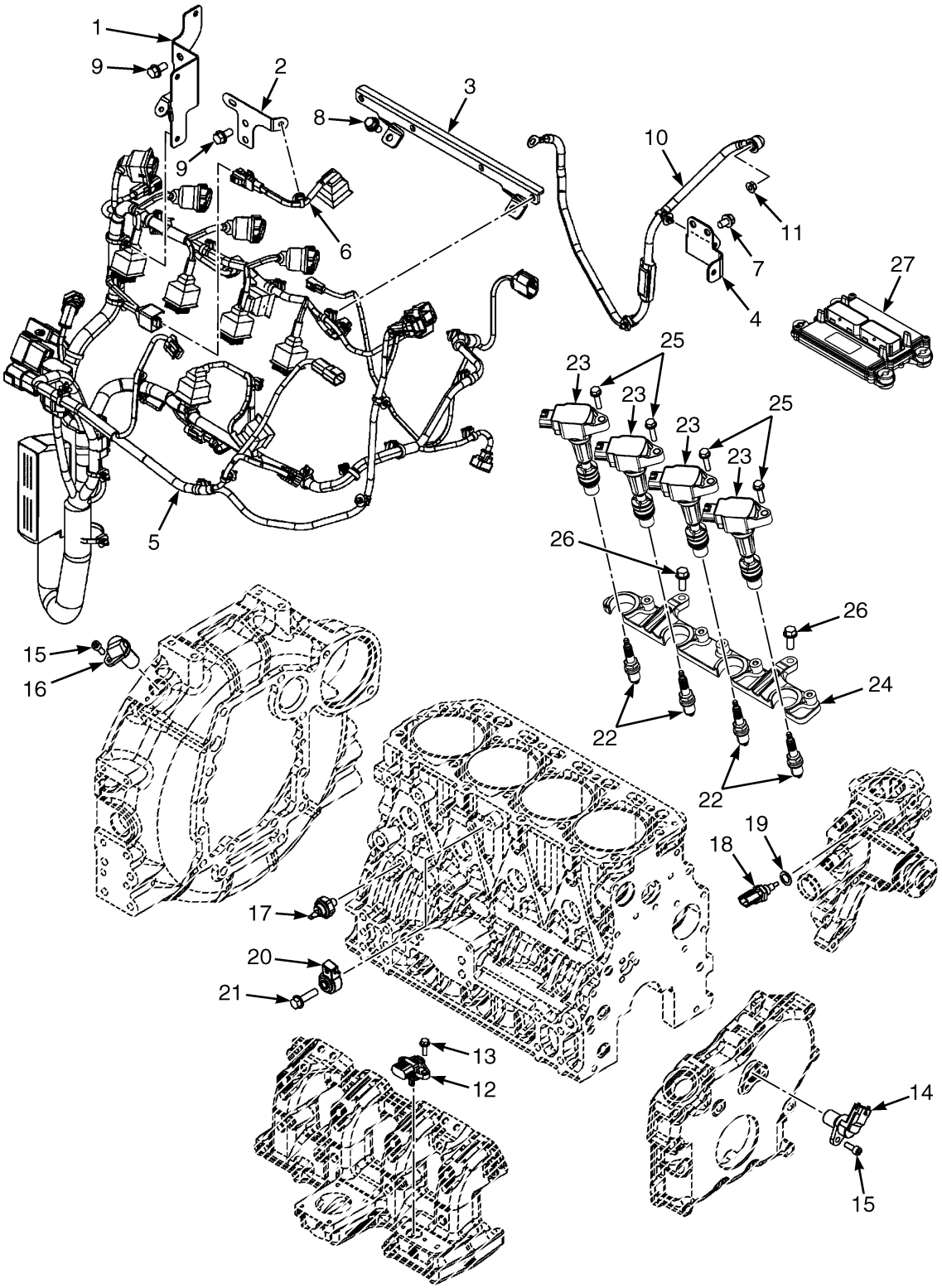

©2026 HYSTER COMPANY

ELECTRICAL PARTS

ITEM	PART NO.	DESCRIPTION	QTY
	4667917	Engine Assy-LPG (2.2L - Certified)	1
	4671903	Engine Assy-BI-Fuel (2.2L- Certified)	1
	4742992	Engine Assy-Bi-Fuel (Yanmar 2.2L) (Alternate Part)	1
	4671959	Engine Assy-BI-Fuel (2.2L - Non Certified)	1
	4671902	Engine Assy-LPG (2.2L - Non Certified)	1
	4741920	Engine Assy-LPG (2.2L - Certified, HST)	1
1	4304605	Bracket (Oxygen)	1
2	4304606	Bracket (Knock)	1
3	4304607	Bracket (Harness)	1
4	4304608	Bracket (Harness)	1
5	4304609	Wire Harness (LPG)	1
5	4736626	Wire Harness (LPG) (Alternate Part)	1
5	4367942	Wire Harness (LPG/Bi-Fuel)	1
5	4736625	Wire Harness (LPG/Bi-Fuel) (Alternate Part)	1
5	4736590	Wire Harness (LPG/BiFuel) (Alternate Part)	1
5	4738569	Wire Harness (LPG/BiFuel) (Alternate Part)	1
6	4304610	Wire Harness (Knock)	1
7	1599448	Bolt	2
8	4304611	Bolt	2
9	1599470	Bolt	4
10	4304612	Wire Harness (Alternator, Starter)	1
11	4304613	Nut	1
12	4304614	Sensor (Temperature/Pressure)	1
13	4304563	Bolt	2
14	4304616	Sensor (Rotation)	1
15	4304499	Bolt	2
16	4304618	Sensor (Flywheel)	1
17	4304620	Switch (Oil Pressure)	1
18	4304621	Sensor (Temperature)	1
19	4304622	Washer	1
20	4304623	Sensor (Knock)	1
21	1599472	Bolt	1
22	4304602	Plug , Spark (LPG)	4
22	4367940	Spark Plug (Bi-Fuel)	4
23	4304603	Ignition Coil	4
24	4304604	Bracket	1
25	4122585	Bolt	4
26	1599471	Bolt	2
27	4304625	Control Unit (Engine Control Module) (Bi-Fuel)	1
27	81022757	Engine Control Module (LPG)	1

NOTES

©2026 HYSTER COMPANY

5 ENGINE ASSEMBLY - DIESEL - NON CERT

SECTION 5
ENGINE ASSEMBLY - DIESEL - NON CERT

DESCRIPTION	PAGE
ALTERNATOR	
YANMAR 3.0L AND 3.3L DIESEL	5-32
CAMSHAFT AND DRIVE GEAR	
YANMAR 3.0L AND 3.3L DIESEL	5-18
CRANKSHAFT AND PISTON	
YANMAR 3.0L AND 3.3L DIESEL	5-20
CYLINDER BLOCK	
YANMAR 3.0L AND 3.3L DIESEL	5-6
CYLINDER HEAD	
YANMAR 3.0L AND 3.3L DIESEL	5-10
ENGINE	
AND ANCILLARY ELECTRICAL - YANMAR 3.0L AND 3.3L DIESEL	5-4
ENGINE MOUNTING AND TORQUE CONVERTER	
YANMAR 3.0L AND 3.3L DIESEL	5-2
FLYWHEEL AND OIL PAN	
YANMAR 3.0L AND 3.3L DIESEL	5-16
FUEL FILTER AND WATER SEPARATOR	
YANMAR 3.0L AND 3.3L DIESEL	5-28
FUEL INJECTION SYSTEM	
YANMAR 3.0L AND 3.3L DIESEL	5-26
GEAR HOUSING	
YANMAR 3.0L AND 3.3L DIESEL	5-8
INTAKE AND EXHAUST MANIFOLD	
YANMAR 3.0L AND 3.3L DIESEL	5-14
LUBE OIL SYSTEM	
YANMAR 3.0L AND 3.3L DIESEL	5-22
STARTER	
YANMAR 3.0L AND 3.3L DIESEL	5-30
WATER PUMP	
YANMAR 3.0L AND 3.3L DIESEL	5-24

©2026 HYSTER COMPANY

ENGINE MOUNTING AND TORQUE CONVERTER (FIGURE 5-1)

YANMAR 3.0L AND 3.3L DIESEL

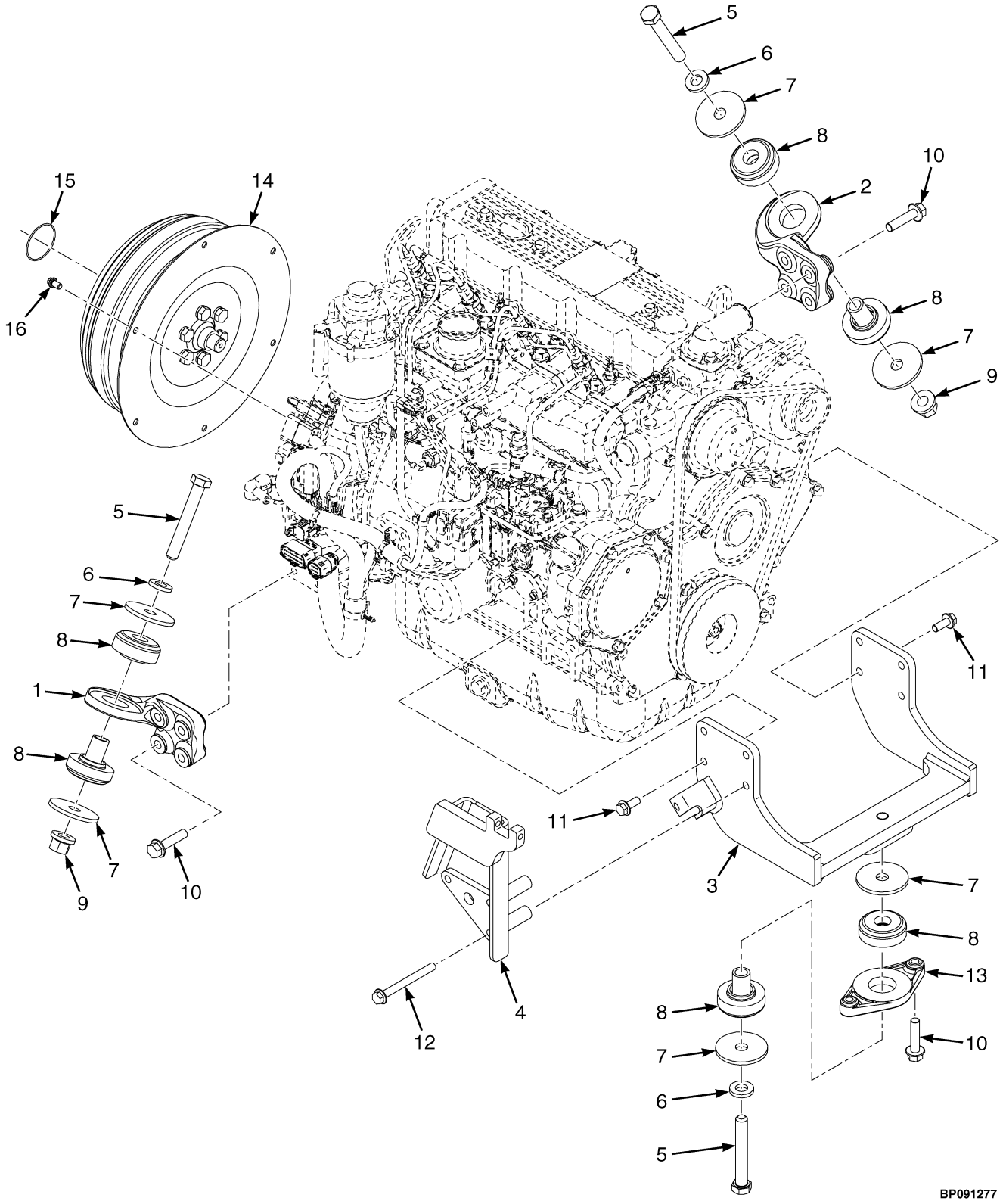

©2026 HYSTER COMPANY

ENGINE MOUNTING AND TORQUE CONVERTER

YANMAR 3.0L AND 3.3L DIESEL

KEY:
A: w/ Air Conditioner
B: w/o Air Conditioner

ITEM	PART NO.	DESCRIPTION	QTY A	QTY B
1	4307301	Motor Mount (LH)	1	1
1	4307586	Motor Mount (LH) (Optional)	1	1
2	4306703	Motor Mount (RH)	1	1
2	4307585	Motor Mount (RH) (Optional)	1	1
3	4307899	Motor Mount (Rear)	1	1
4	4267148	Bracket Wldmt - Air Conditioner	1	..
5	293696	Capscrew	3	3
6	1504075	Washer	3	3
7	4306702	Washer	6	6
8	4280438	Isolator	3	3
9	1565453	Nut (Flange)	2	2
10	1665557	Capscrew	10	10
11	4043636	Capscrew	5	8
12	4247748	Capscrew	3	..
13	4308533	Mount - Rear Adapter	1	1
14	4232917	Torque Converter	1	1
15	140465	O-Ring	1	1
16	4676480	Capscrew	6	6

©2026 HYSTER COMPANY

ENGINE (FIGURE 5-2)
AND ANCILLARY ELECTRICAL — YANMAR 3.0L AND 3.3L DIESEL

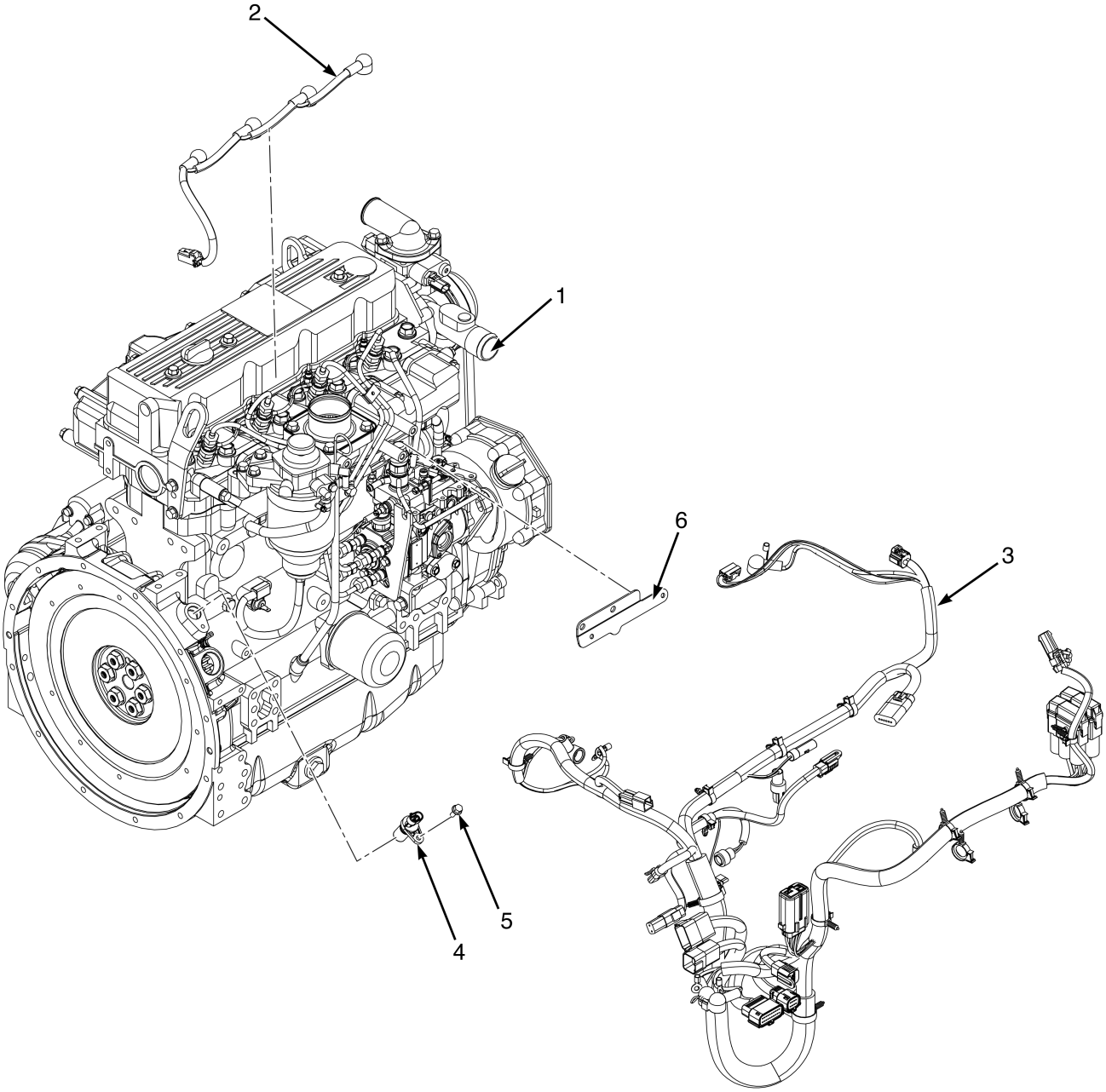

BP091932

©2026 HYSTER COMPANY

ENGINE

AND ANCILLARY ELECTRICAL – YANMAR 3.0L AND 3.3L DIESEL

ITEM	PART NO.	DESCRIPTION	QTY
1	4671891	Engine Assy-Diesel (3.0L - Non Certified)	1
1	4671892	Engine Assy-Diesel (3.3L - Non Certified)	1
2	4722044	Wire Harness (Glow Plug Jumper)	1
3	4722006	Wire Harness (Yanmar Diesel IDI w/ E-Throttle)	1
4	1541231	Sensor (Input Speed, TISS)	1
5	~~4111055~~		
	1527876	Capscrew	1
6	4369255	Bracket	1

©2026 HYSTER COMPANY

CYLINDER BLOCK (FIGURE 5-3)
YANMAR 3.0L AND 3.3L DIESEL

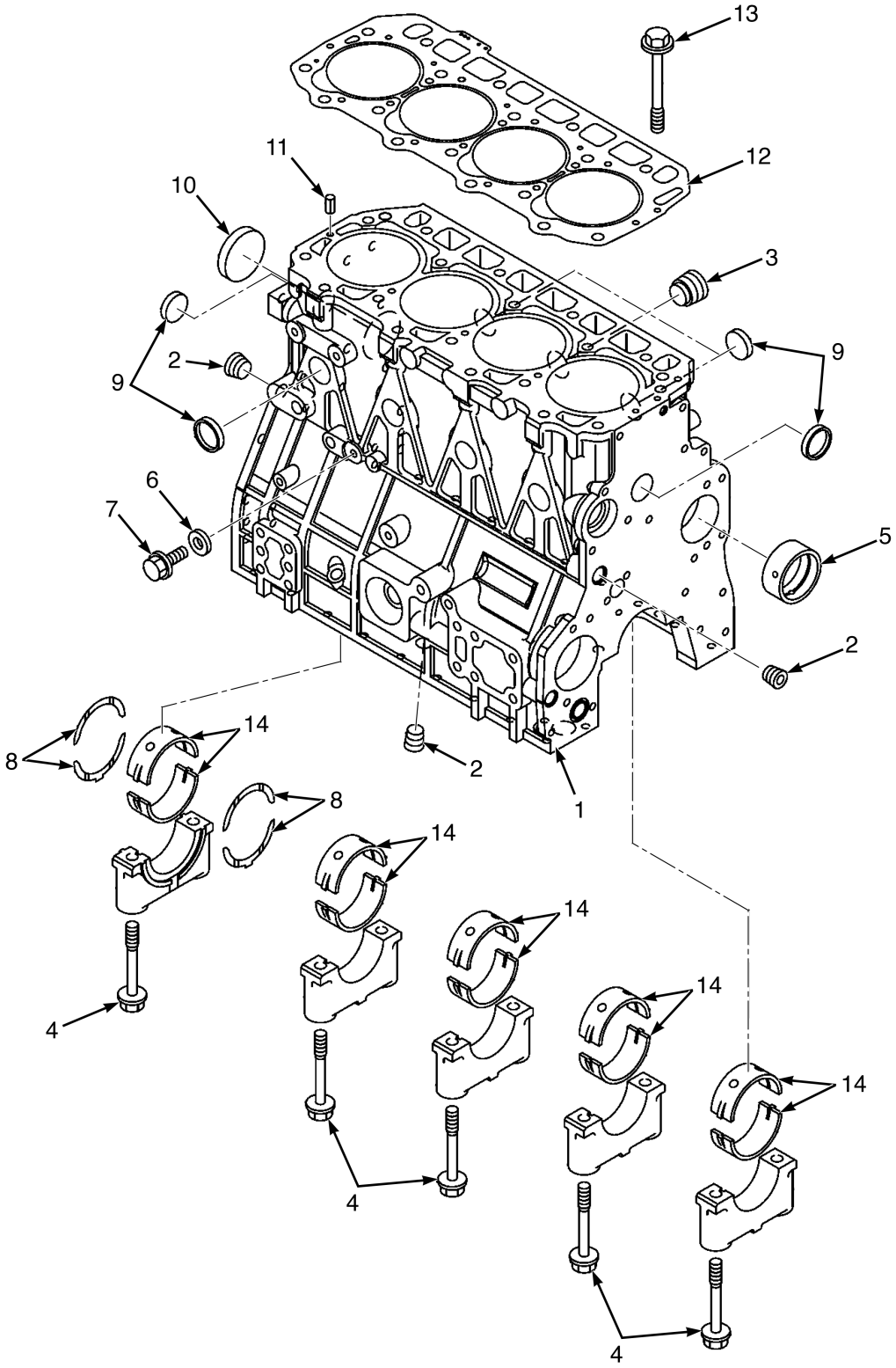

©2026 HYSTER COMPANY

CYLINDER BLOCK

YANMAR 3.0L AND 3.3L DIESEL

ITEM	PART NO.	DESCRIPTION	QTY
	4671891	Engine Assy-Diesel (3.0L - Non Certified)	1
	4671892	Engine Assy-Diesel (3.3L - Non Certified)	1
1	4368280	Cylinder Block	1
2	1599441	Plug	3
3	1599442	Plug	1
4	1599443	Bolt	10
5	1599444	Bushing	1
6	1599445	Washer	1
7	1599448	Bolt	1
8	4365151	Thrust Bearing (OS/.25) (Optional)	2
8	2092552	Kit-Thrust Bearing (Standard)	2
9	4303011	Plug	8
10	1599449	Plug	1
11	1599446	Pin 6x12	2
12	4122467	Gasket	1
13	1599454	Bolt	18
14	2092548	Main Bearing Set	1
14	4365150	Bearing Set (Under-size) (Optional)	5

©2026 HYSTER COMPANY

GEAR HOUSING (FIGURE 5-4)
YANMAR 3.0L AND 3.3L DIESEL

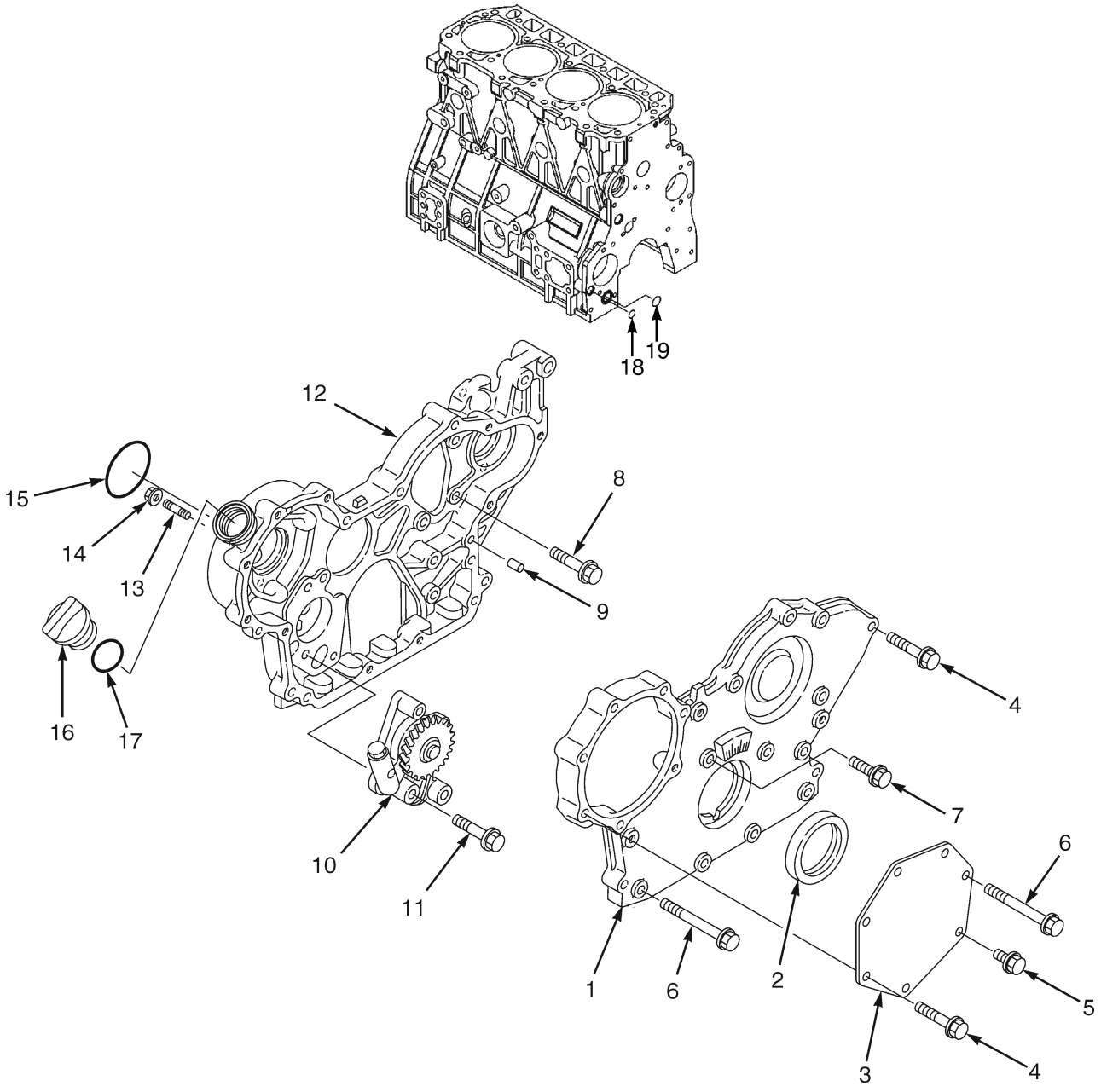

BP091927

©2026 HYSTER COMPANY

GEAR HOUSING

YANMAR 3.0L AND 3.3L DIESEL

ITEM	PART NO.	DESCRIPTION	QTY
	4671891	Engine Assy-Diesel (3.0L - Non Certified)	1
	4671892	Engine Assy-Diesel (3.3L - Non Certified)	1
1	1599459	Cover	1
2	2100927	Oil Seal	1
3	1599461	Cover	1
4	1599473	Bolt	10
5	1599470	Bolt	1
6	1599476	Bolt	7
7	1599472	Bolt	1
8	1599471	Bolt	3
9	1599458	Pin	4
10	1599466	Engine Oil Pump	1
11	1599475	Bolt	1
12	1599465	Cover	1
13	1599467	Stud	3
14	2068378	Nut	3
15	1599462	O-Ring	1
16	1599463	Cap (Oil Fill)	1
17	1599464	O-Ring	1
18	1599469	O-Ring	1
19	1599468	O-Ring	1
	4368283	Kit (Gear Case Assembly)	1
	4068363	Gasket -Kit (3.0L)	1
	1689744	Kit-Gasket (Complete Engine) (3.3L)	1

CYLINDER HEAD (FIGURE 5-5)
YANMAR 3.0L AND 3.3L DIESEL

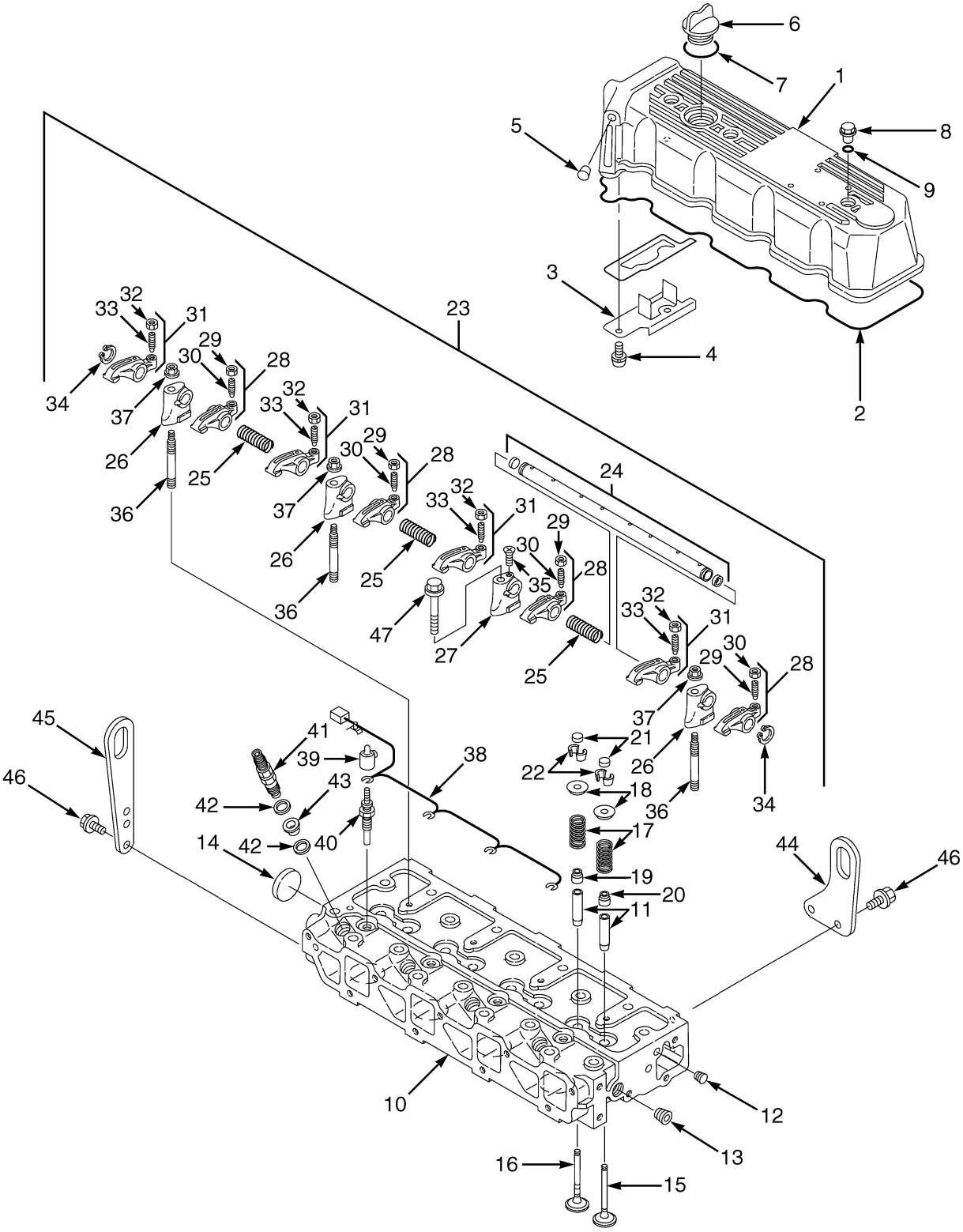

©2026 HYSTER COMPANY

CYLINDER HEAD

YANMAR 3.0L AND 3.3L DIESEL

ITEM	PART NO.	DESCRIPTION	QTY
	4671891	Engine Assy-Diesel (3.0L - Non Certified)	1
	4671892	Engine Assy-Diesel (3.3L - Non Certified)	1
1	1599545	Engine Cover Assembly	1
2	1599546	Gasket	1
3	1599547	Plate	1
4	1599548	Screw	2
5	1599549	Plug	1
6	1599463	Cap (Oil Fill)	1
7	1599464	O-Ring	1
8	1599544	Plug	3
9	1599550	O-Ring	3
10	4068195	Cylinder Head (3.0L)	1
10	1600273	Cylinder Head Assembly (3.3L)	1
11	1599525	Guide	8
12	1599526	Plug	1
13	1599441	Plug	1
14	1599528	Plug	1
15	1599489	Inlet Valve	4
16	1599516	Exhaust Valve	4
17	1599517	Spring	8
18	1599518	Retainer	8
19	1599519	Seal (Exhaust Valve)	4
20	1599520	Seal (Intake Valve)	4
21	1599521	Cap	8
22	1599529	Retainer	8
23	1599530	Support Assembly (Rocker Arm)	1
24	1599531	Shaft	1
25	1599532	Spring	3
26	1599533	Support	3
27	1599534	Support	1
28	1599535	Kit-Rocker Arm	4
29	1599536	Screw	1
30	1599537	Nut	1
31	1599538	Kit-Rocker Arm	4
32	1599536	Screw	1
33	1599537	Nut	1
34	1599539	Retaining Ring	2
35	1599540	Screw	1
36	1599541	Stud	3
37	1599542	Nut	3
38	1599553	Connector (Glow Plug)	1
39	1599557	Cover	4
40	4068196	Plug (Glow Plug)	4
41	1599818	Injector (☞Figure 5-12)	4
42	1599523	Gasket	8
43	1599522	Protector	4
44	1599487	Lifting Eye	1
45	1599486	Lifting Eye	1
46	1599470	Bolt	4
47	1599555	Bolt	1

©2026 HYSTER COMPANY

CYLINDER HEAD

YANMAR 3.0L AND 3.3L DIESEL

ITEM	PART NO.	DESCRIPTION	QTY
	4068363	Gasket -Kit (3.0L)	1
	1689744	Kit-Gasket (Complete Engine) (3.3L)	1

See Service Manual for service procedures.
©2026 HYSTER COMPANY

NOTES

INTAKE AND EXHAUST MANIFOLD (FIGURE 5-6)

YANMAR 3.0L AND 3.3L DIESEL

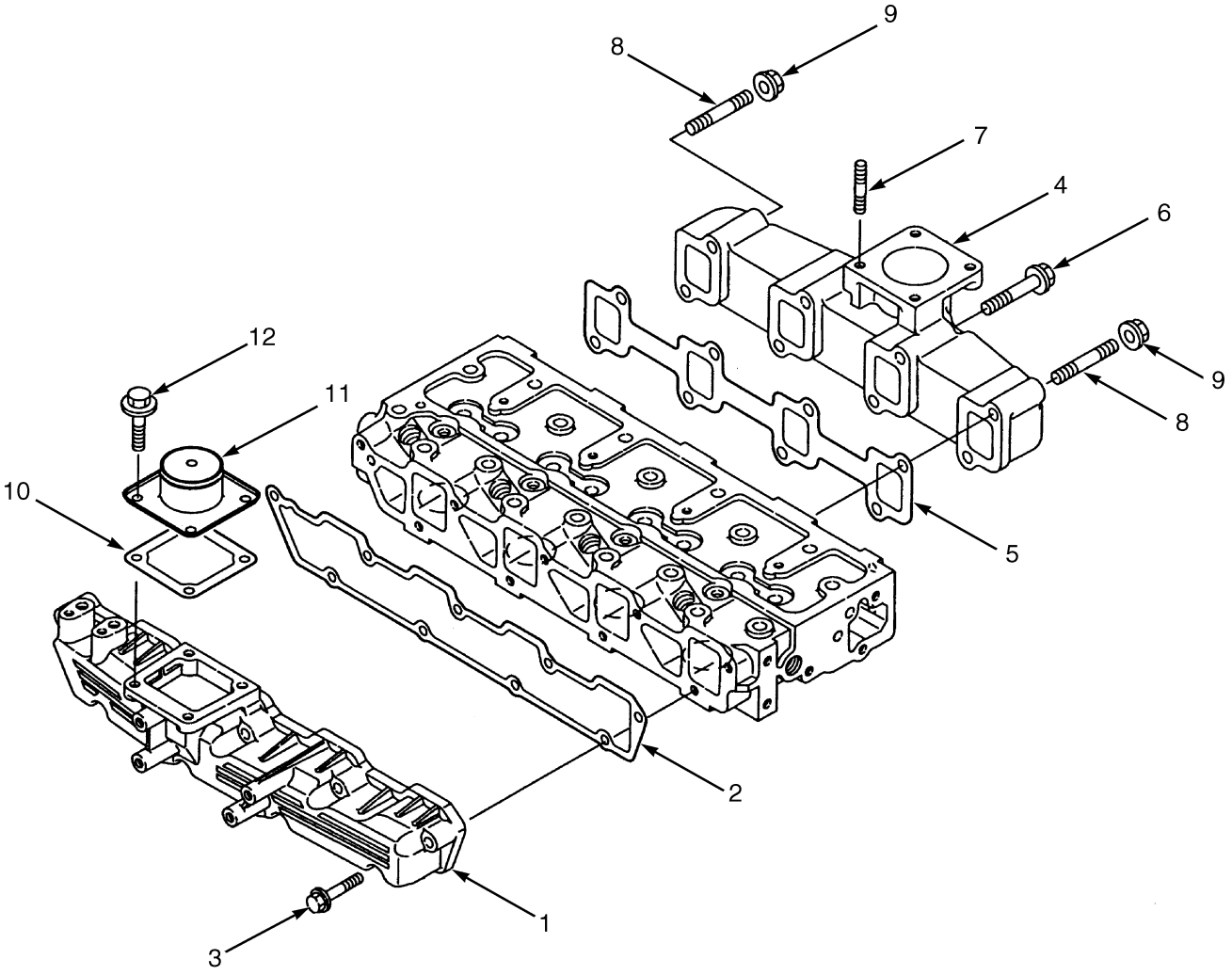

BP090185

©2026 HYSTER COMPANY

INTAKE AND EXHAUST MANIFOLD

YANMAR 3.0L AND 3.3L DIESEL

ITEM	PART NO.	DESCRIPTION	QTY
	4671891	Engine Assy-Diesel (3.0L - Non Certified)	1
	4671892	Engine Assy-Diesel (3.3L - Non Certified)	1
1	1599556	Intake Manifold	1
2	1599543	Gasket	1
3	1599475	Bolt	9
4	1599559	Exhaust Manifold	1
5	1599560	Gasket	1
6	1599561	Bolt	9
7	1599562	Stud	4
8	1599563	Stud	2
9	2068378	Nut	2
10	1599565	Gasket	1
11	1599567	Adapter	1
12	1599568	Bolt	4
	4068363	Gasket -Kit (3.0L)	1
	1689744	Kit-Gasket (Complete Engine) (3.3L)	1

©2026 HYSTER COMPANY

FLYWHEEL AND OIL PAN (FIGURE 5-7)

YANMAR 3.0L AND 3.3L DIESEL

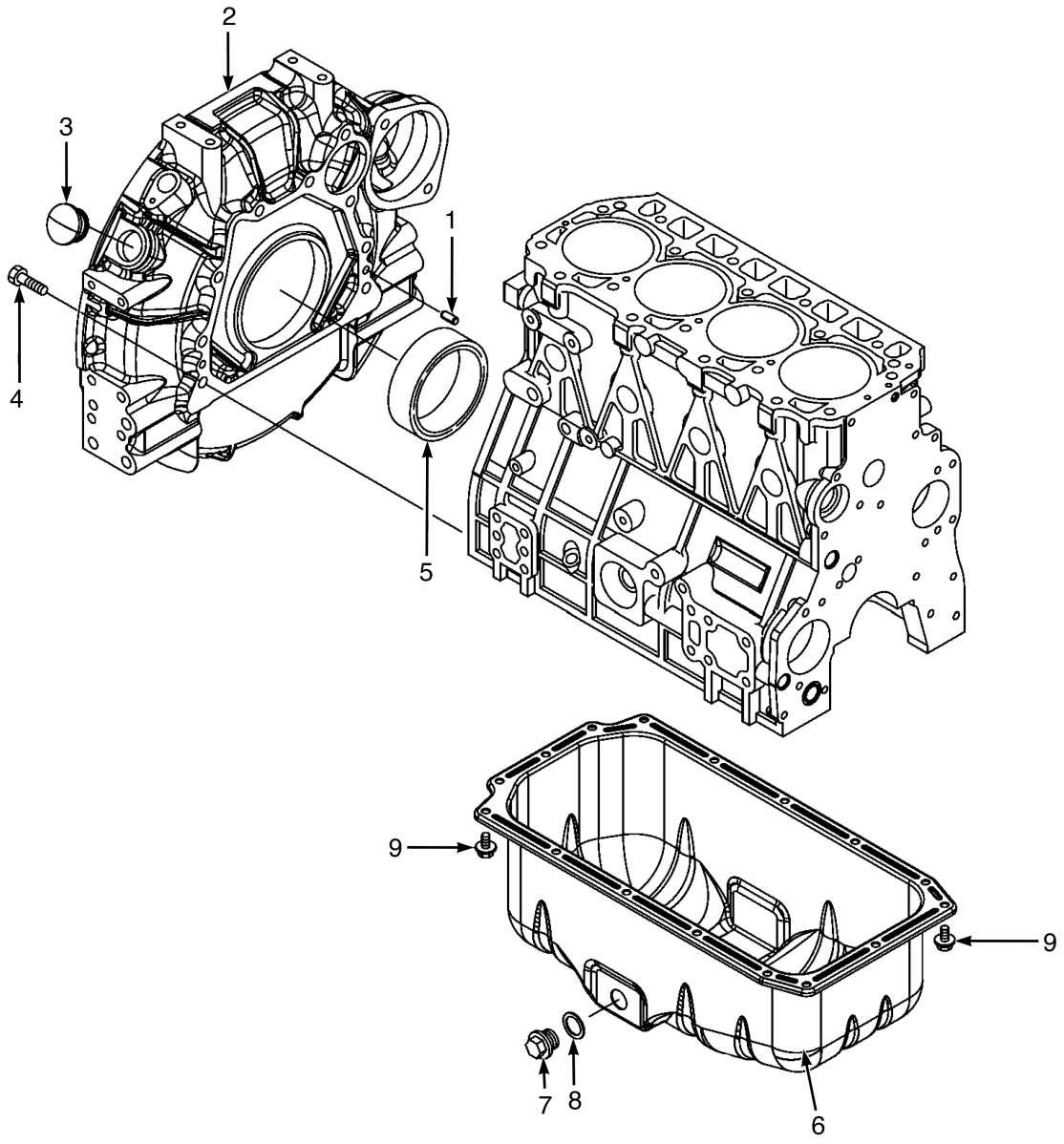

BP091928

©2026 HYSTER COMPANY

ITEM	PART NO.	DESCRIPTION	QTY
	4671891	Engine Assy-Diesel (3.0L - Non Certified)	1
	4671892	Engine Assy-Diesel (3.3L - Non Certified)	1
1	1599458	Pin	2
2	4368361	Flywheel Housing	1
3	4303247	Cap (Wheel Cover)	1
4	2084314	Bolt	9
5	~~1599484~~		
	1707826	Seal	1
6	1599479	Oil Pan	1
7	1599480	Drain Plug	1
8	1599481	Oil Seal	1
9	1599448	Bolt	16

©2026 HYSTER COMPANY

CAMSHAFT AND DRIVE GEAR (FIGURE 5-8)

YANMAR 3.0L AND 3.3L DIESEL

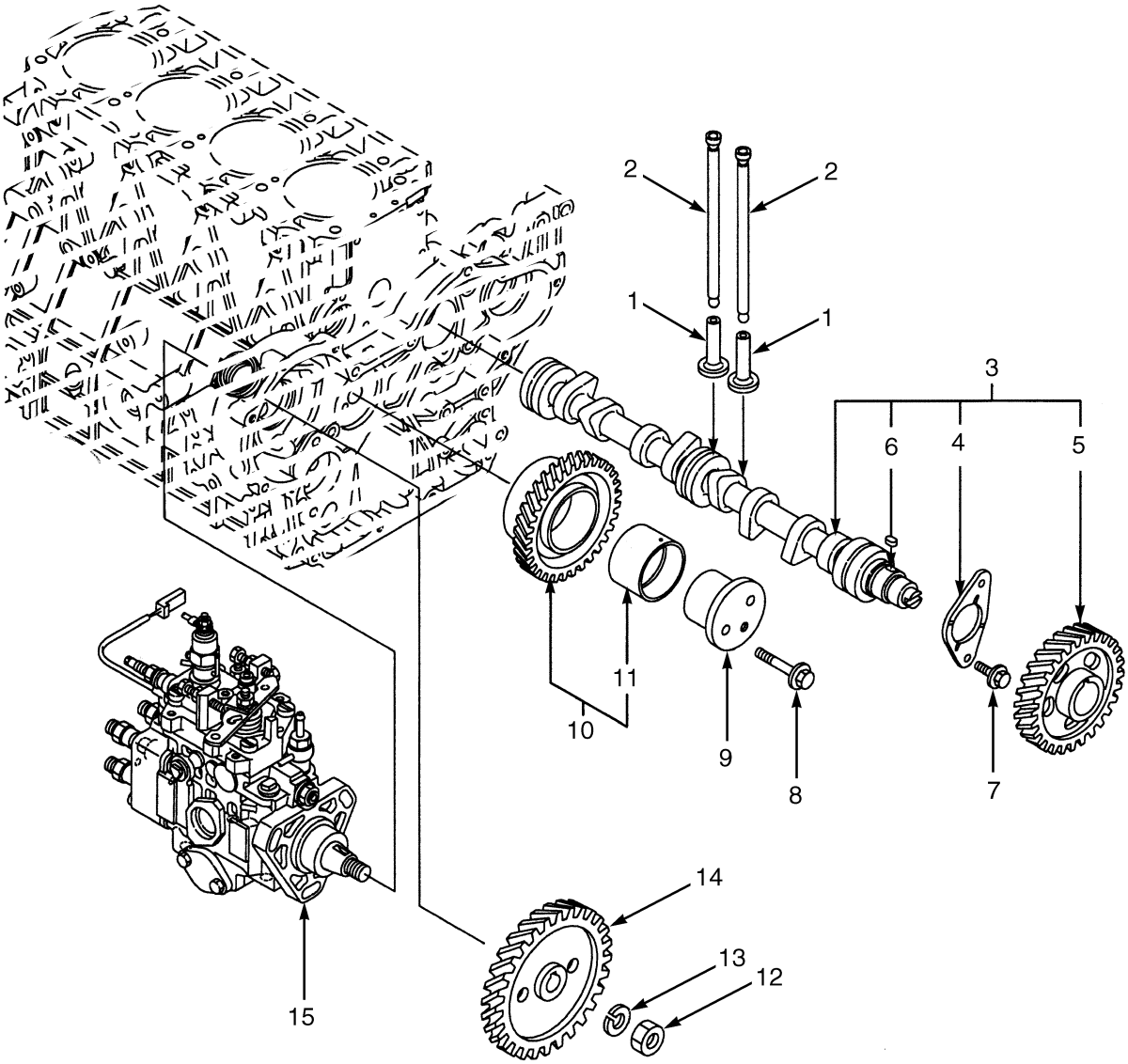

BP090186

©2026 HYSTER COMPANY

CAMSHAFT AND DRIVE GEAR

YANMAR 3.0L AND 3.3L DIESEL

ITEM	PART NO.	DESCRIPTION	QTY
	4671891	Engine Assy-Diesel (3.0L - Non Certified)	1
	4671892	Engine Assy-Diesel (3.3L - Non Certified)	1
1	1599569	Tappet	8
2	1599570	Push Rod	8
3	1599571	Camshaft	1
4	1599572	Retainer	1
5	1599573	Gear	1
6	1599574	Key	1
7	1599568	Bolt	2
8	1599579	Bolt	2
9	1599576	Shaft	1
10	4368867	Idler Gear	1
11	4365159	Bushing (Idler Gear)	1
12	1599582	Locknut	1
13	1599581	Spring Washer	1
14	1599580	Gear	1
15	4068203	Fuel Pump (3.0L) (☞Figure 5-12)	1
15	4117899	Injection Pump (3.3L) (☞Figure 5-12)	1

CRANKSHAFT AND PISTON (FIGURE 5-9)

YANMAR 3.0L AND 3.3L DIESEL

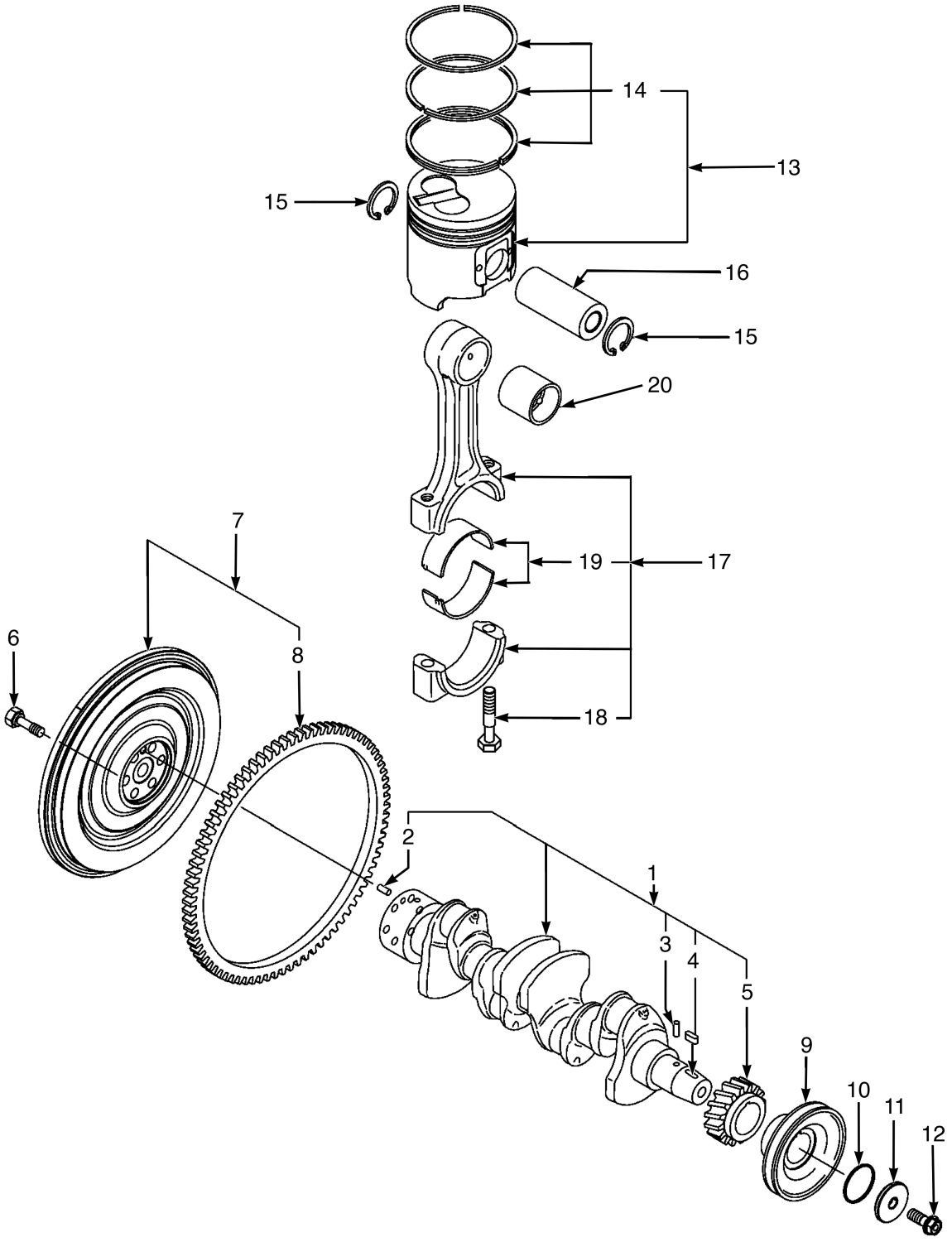

BP091929

©2026 HYSTER COMPANY

CRANKSHAFT AND PISTON

YANMAR 3.0L AND 3.3L DIESEL

KEY:
A: 3.0L
B: 3.3L

ITEM	PART NO.	DESCRIPTION	QTY A	QTY B
	4671891	Engine Assy-Diesel (3.0L - Non Certified)	1	..
	4671892	Engine Assy-Diesel (3.3L - Non Certified)	..	1
1	1600275	Crankshaft	1	1
2	1599586	Pin	1	1
3	1599585	Pin	1	1
4	1599574	Key	1	1
5	1599584	Gear	1	1
6	1599591	Bolt	6	6
7	4368994	Flywheel	1	1
8	2084323	Ring Gear	1	1
9	1599588	Pulley	1	1
10	4693044	Packing (O-Ring)	1	1
11	1599589	Washer	1	1
12	1720462	Bolt	1	1
13	4068197	Piston (With Standard Rings)	4	..
13	4068199	Piston (O/S 0.25 with Rings) (Optional)	4	..
13	1600276	Piston Kit - Standard	..	4
13	1600278	Piston Kit (O/S 0.25) (Optional)	..	4
14	4068198	Ring (Kit-Standard Piston Rings)	1	..
14	4068200	Ring (Kit-OS 0.25 Piston Rings) (Optional)	1	..
14	1600277	Kit-Piston Ring (Standard)	..	1
14	1600279	Kit-Piston Ring (O/S 0.25) (Optional)	..	1
15	1599595	Snap Ring	8	8
16	1599594	Pin	4	4
17	1599596	Piston Rod Assembly	4	4
18	1599598	Bolt	2	2
19	2092550	Piston Rod Bearing (Standard)	1	1
19	4365162	Bearing (Assembly) (Optional)	4	..
20	1599597	Bushing	4	4

©2026 HYSTER COMPANY

LUBE OIL SYSTEM (FIGURE 5-10)

YANMAR 3.0L AND 3.3L DIESEL

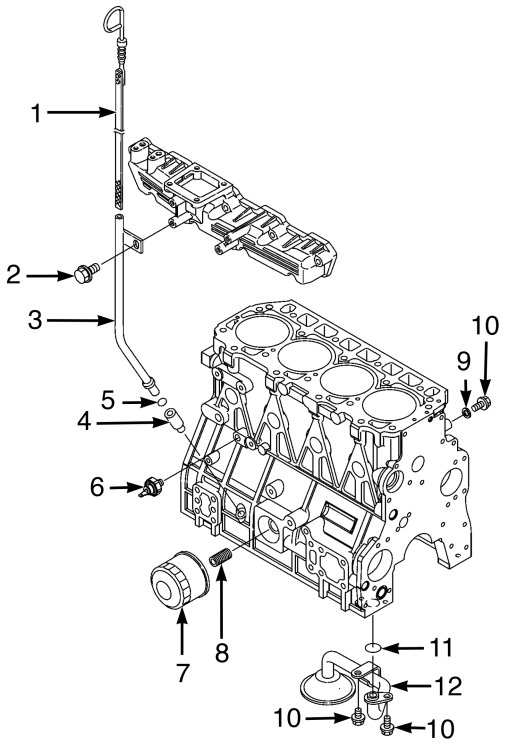

©2026 HYSTER COMPANY

LUBE OIL SYSTEM

YANMAR 3.0L AND 3.3L DIESEL

ITEM	PART NO.	DESCRIPTION	QTY
	4671891	Engine Assy-Diesel (3.0L - Non Certified)	1
	4671892	Engine Assy-Diesel (3.3L - Non Certified)	1
1	1599604	Dipstick	1
2	1599470	Bolt	1
3	1599606	Dipstick Tube (3.0L)	1
3	1599604	Dipstick (3.3L)	1
4	1599605	Guide	1
5	4068201	O-Ring	1
6	4304620	Switch (Oil Pressure)	1
7	2077983	Oil Filter	1
8	1599610	Stud	1
9	1599445	Washer	1
10	1599448	Bolt	3
11	1599468	O-Ring	1
12	1599611	Pipe	1

©2026 HYSTER COMPANY

WATER PUMP (FIGURE 5-11)
YANMAR 3.0L AND 3.3L DIESEL

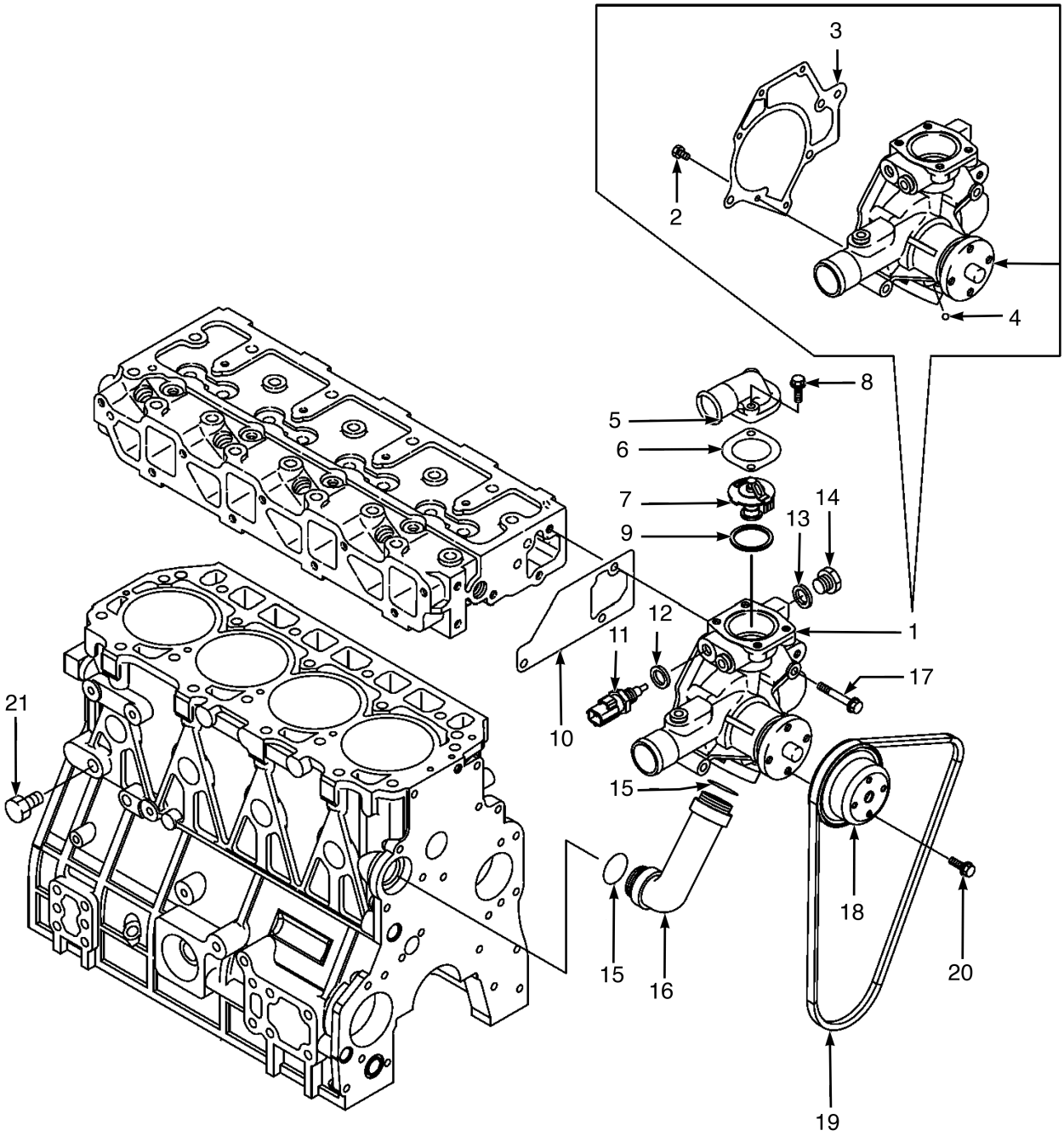

BP091931

©2026 HYSTER COMPANY

WATER PUMP

YANMAR 3.0L AND 3.3L DIESEL

ITEM	PART NO.	DESCRIPTION	QTY
	4671891	Engine Assy-Diesel (3.0L - Non Certified)	1
	4671892	Engine Assy-Diesel (3.3L - Non Certified)	1
1	4369030	Pump (Water)	1
2	1599899	Bolt	2
3	1599840	Gasket	1
4	1599844	Ball	1
5	1599798	Cover	1
6	1597710	Gasket	1
7	4068202	Thermostat	1
8	1599801	Bolt	2
9	1597709	Gasket	1
10	1599803	Gasket	1
11	4304621	Sensor (Temperature)	1
12	1600086	Seal	1
13	1599814	Gasket	1
14	1599812	Plug	1
15	1599807	O-Ring	2
16	1599797	Pipe	1
17	1599579	Bolt	3
18	1599795	Water Pump Pulley	1
19	4369029	V-Belt	1
20	1599448	Bolt	4
21	1599802	Drain Plug	1

©2026 HYSTER COMPANY

FUEL INJECTION SYSTEM (FIGURE 5-12)

YANMAR 3.0L AND 3.3L DIESEL

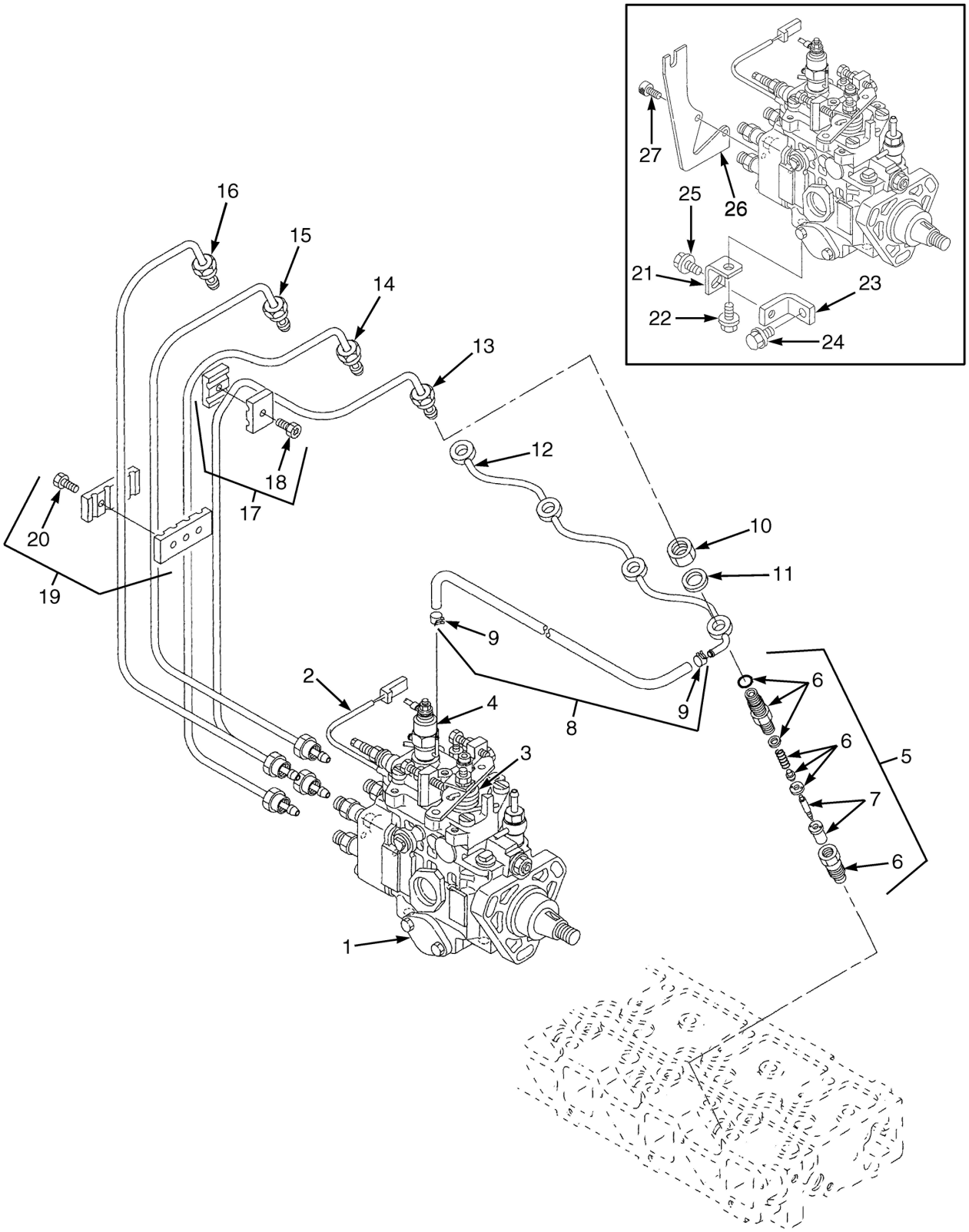

©2026 HYSTER COMPANY

FUEL INJECTION SYSTEM
YANMAR 3.0L AND 3.3L DIESEL

ITEM	PART NO.	DESCRIPTION	QTY
	4671891	Engine Assy-Diesel (3.0L - Non Certified)	1
	4671892	Engine Assy-Diesel (3.3L - Non Certified)	1
1	4068203	Fuel Pump (3.0L)	1
1	4117899	Injection Pump (3.3L)	1
2	1608616	Solenoid (Fuel Shut-Off)	1
2	1608617	O-Ring	1
3	4021384	Spring (Yanmar 2.6L)	1
4	1597644	Solenoid Valve (Cold Start)	1
4	1600093	O-Ring	1
5	1599818	Injector	4
6	1599820	Retainer	1
7	1599819	Nozzle	1
8	1599828	Tube Assy	1
9	1599829	Clamp	2
10	1599832	Nut	4
11	1599831	Gasket	4
12	1599830	Tube Assy (Fuel Return)	1
13	1599827	Tube Assy (#4)	1
14	1599826	Tube Assy (#3)	1
15	1599825	Tube Assy (#2)	1
16	1599824	Tube Assy (#1)	1
17	1599821	Retainer	2
18	1599822	Bolt	1
19	1599823	Retainer	1
20	1599822	Bolt	2
21	1599909	Retainer	1
22	1599911	Bolt	1
23	1599910	Bracket	1
24	1599913	Bolt	1
25	1599912	Bolt	1
26	1599907	Bracket	1
27	1599908	Bolt	2
	4068363	Gasket -Kit (3.0L)	1
	1689744	Kit-Gasket (Complete Engine) (3.3L)	1

FUEL FILTER AND WATER SEPARATOR (FIGURE 5-13)

YANMAR 3.0L AND 3.3L DIESEL

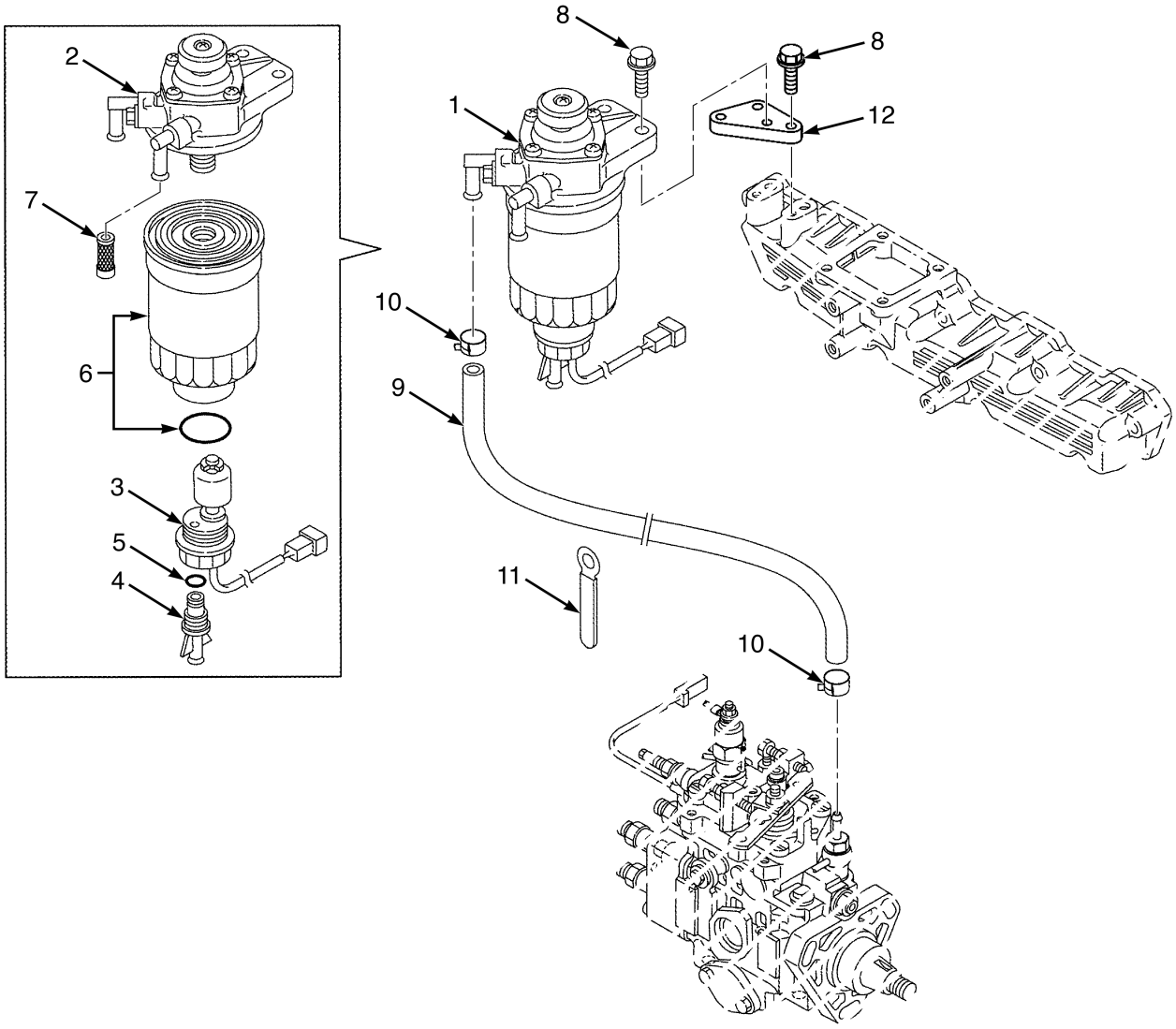

BP091925

©2026 HYSTER COMPANY

FUEL FILTER AND WATER SEPARATOR

YANMAR 3.0L AND 3.3L DIESEL

ITEM	PART NO.	DESCRIPTION	QTY
	4671891	Engine Assy-Diesel (3.0L - Non Certified)	1
	4671892	Engine Assy-Diesel (3.3L - Non Certified)	1
1	1599833	Fuel Filter (Assembly)	1
2	1599834	Body (Primer Pump)	1
3	1599835	Sensor	1
4	1599836	Drain Plug	1
5	1599837	O-Ring	1
6	4369219	Fuel Filter (Cartridge)	1
6	1330033	Fuel Filter (Cartridge 10 micron) (Alternate Part)	1
7	1599839	Filter	1
8	1599801	Bolt	4
9	1599841	Tube Assy	1
10	1599842	Clamp	2
11	1599843	Clamp	2
12	4369073	Bracket	1

©2026 HYSTER COMPANY

STARTER (FIGURE 5-14)
YANMAR 3.0L AND 3.3L DIESEL

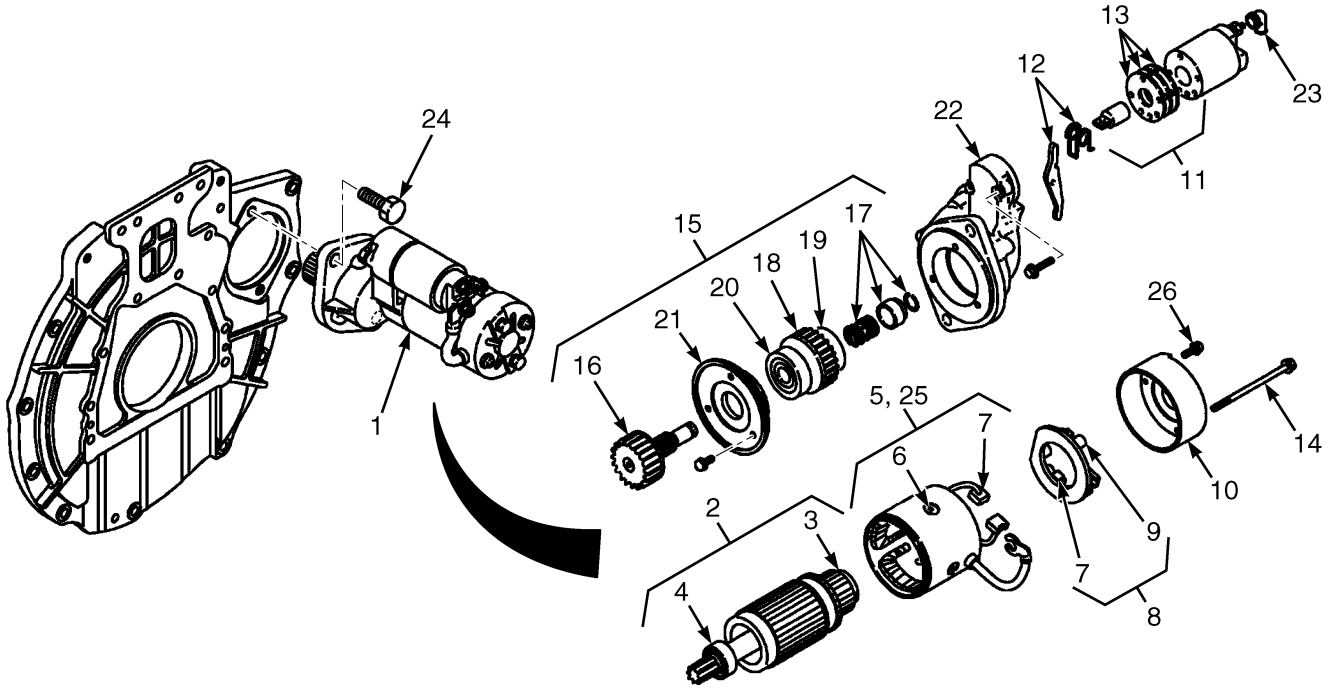

ITEM	PART NO.	DESCRIPTION	QTY
	4671891	Engine Assy-Diesel (3.0L - Non Certified)	1
	4671892	Engine Assy-Diesel (3.3L - Non Certified)	1
1	1719937	Starter Motor Assy	1
2	1719938	Armature Assembly	1
3	1599847	Ball Bearing	1
4	1719964	Bearing	1
5	1719941	Field Coil Assembly	1
6	1599850	Screw	4
7	1599851	Brush	4
8	1719943	Brush Holder Assembly	1
9	1599853	Brush Spring	4
10	1719942	Cover	1
11	1719948	Switch	1
12	1719951	Lever	1
13	1719952	Dust Cover	1
14	1719933	Bolt	2
15	1719944	Pinion Assembly	1
16	1719947	Pinion	1
17	1719965	Stopper Set	1
18	1719945	Clutch Assy	1
19	1719946	Bearing	1
20	1719973	Ball Bearing	1
21	1719950	Retainer	1
22	1719949	Gearbox	1
23	1599868	Cover	1
24	4122595	Bolt	2

See Service Manual for service procedures.
©2026 HYSTER COMPANY

ITEM	PART NO.	DESCRIPTION	QTY
25	1719939	Yoke Assembly	1
26	1719953	Screw	2

©2026 HYSTER COMPANY

ALTERNATOR (FIGURE 5-15)
YANMAR 3.0L AND 3.3L DIESEL

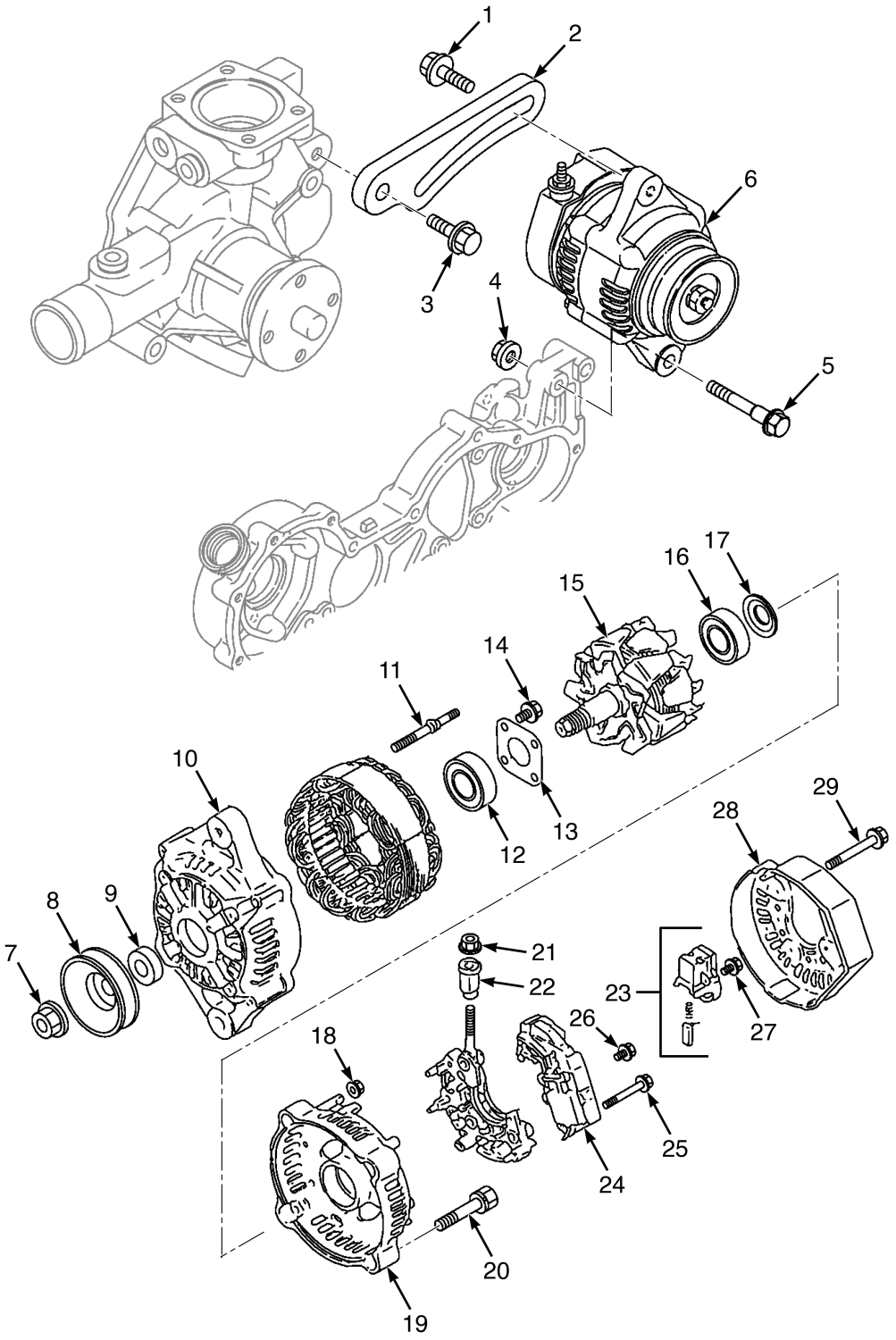

©2026 HYSTER COMPANY

ALTERNATOR

YANMAR 3.0L AND 3.3L DIESEL

ITEM	PART NO.	DESCRIPTION	QTY
	4671891	Engine Assy-Diesel (3.0L - Non Certified)	1
	4671892	Engine Assy-Diesel (3.3L - Non Certified)	1
1	1599896	Bolt	1
2	1599895	Bracket	1
3	1599897	Bolt	1
4	1599894	Nut	1
5	1599893	Bolt	1
6	4369221	Alternator (Assembly)	1
7	1599871	Nut	1
8	1599870	Pulley	1
9	1599892	Collar	1
10	4369222	Frame (Assembly)	1
11	1599876	Stud	2
12	1599873	Ball Bearing	1
13	1599874	Plate	1
14	1599875	Screw	4
15	4728697	Rotor (Assembly)	1
16	1599878	Ball Bearing	1
17	1599879	Cover	1
18	1599890	Nut	2
19	4369223	Cover (Generator)	1
20	1599887	Bolt	2
21	1599891	Nut	1
22	1599889	Bushing	1
23	1599881	Brush Holder	1
24	4728698	Regulator	1
25	1599886	Screw and Washer	2
26	1599884	Screw	1
27	1599883	Screw	6
28	1599888	Cover	1
29	1599885	Bolt	3

NOTES

©2026 HYSTER COMPANY

6 THROTTLE SYSTEM

SECTION 6
THROTTLE SYSTEM

DESCRIPTION	PAGE

THROTTLE PEDAL
DUAL 6-4
MONOTROL 6-3
NON-CERT DIESEL (→ 1/2023) 6-8
NON-CERT DIESEL (2/2023 →) 6-10
SINGLE 6-2

©2026 HYSTER COMPANY

THROTTLE PEDAL (FIGURE 6-1)

SINGLE

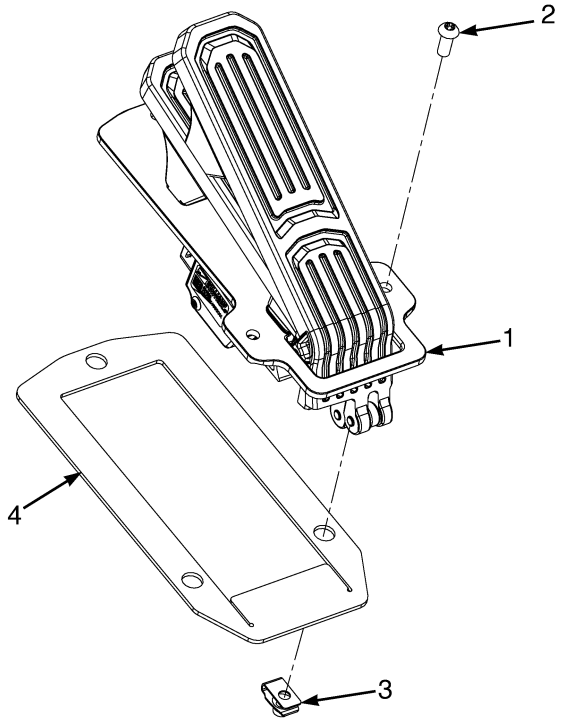

BP260268

ITEM	PART NO.	DESCRIPTION	QTY
1	4274262	Accelerator Pedal - Standard	1
2	1529990	Screw	3
3	1480237	Nut (Foldover)	3
4	4732199	Seal (Throttle)	1

See Service Manual for service procedures.
©2026 HYSTER COMPANY

THROTTLE PEDAL (FIGURE 6-2)

MONOTROL

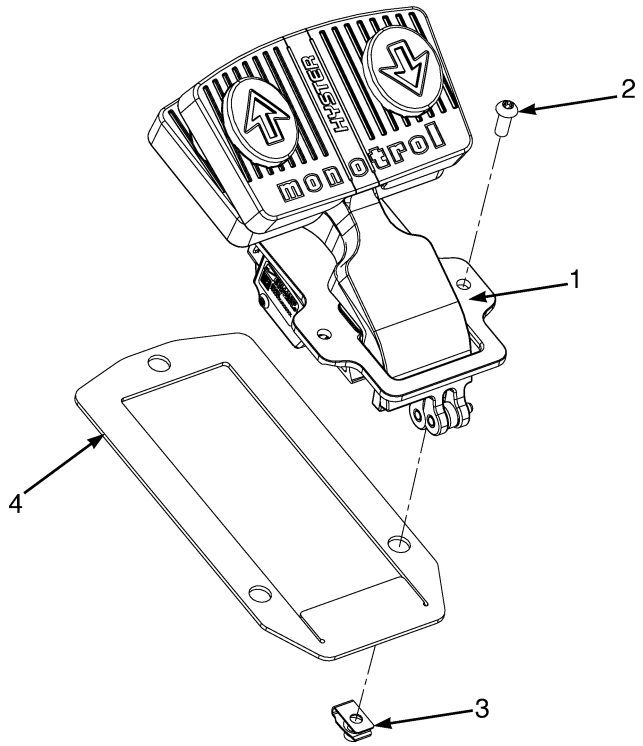

BP260267

ITEM	PART NO.	DESCRIPTION	QTY
1	~~1652183~~		
	~~4050140~~		
	4142048	Accelerator Pedal	1
2	1529990	Screw	3
3	1480237	Nut (Foldover)	3
4	4732199	Seal (Throttle)	1

THROTTLE PEDAL (FIGURE 6-3)
DUAL

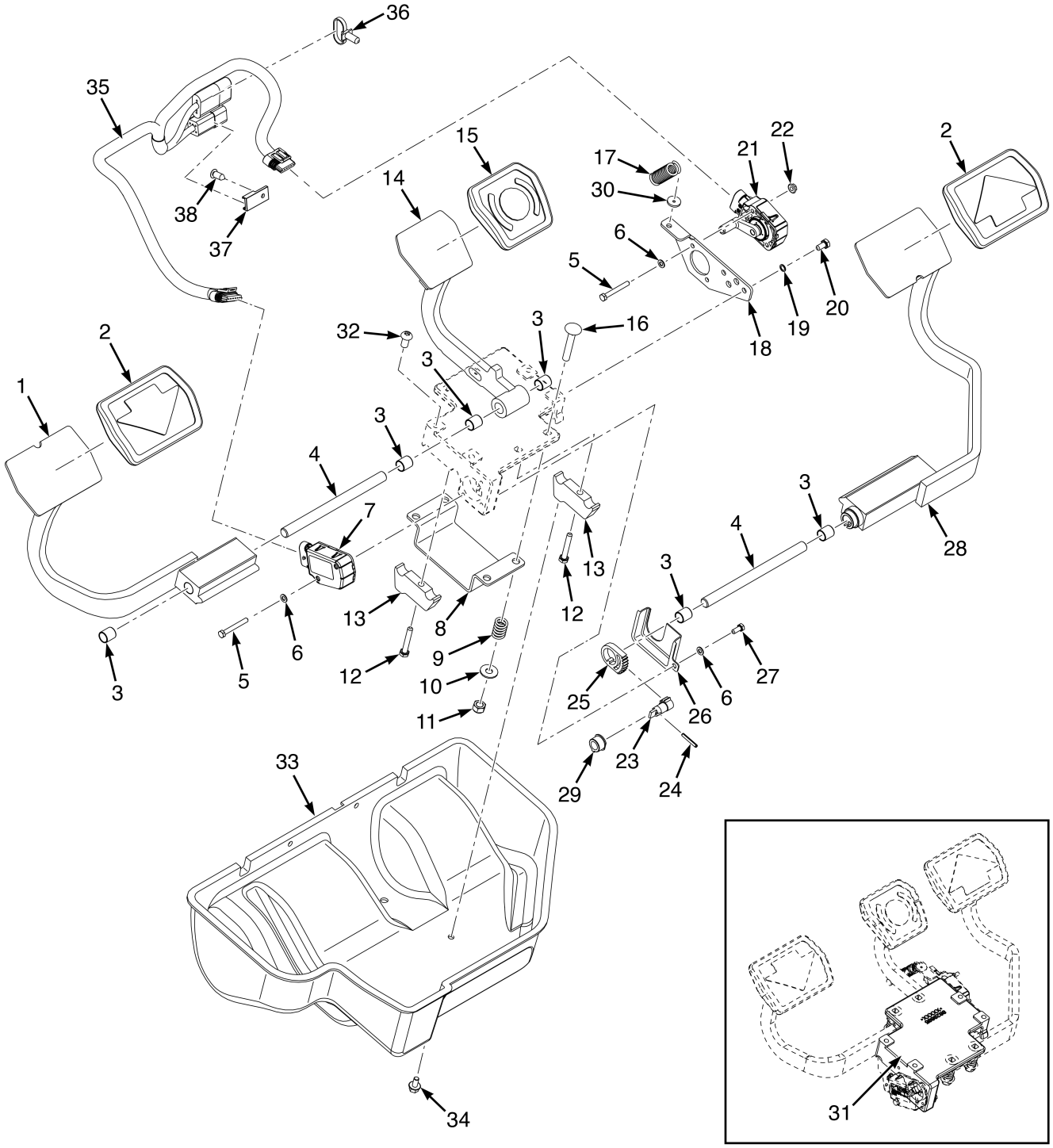

BP260169

©2026 HYSTER COMPANY

THROTTLE PEDAL
DUAL

ITEM	PART NO.	DESCRIPTION	QTY
	b 4258143	Accelerator Pedal - Dual Throttle Pedal	1
	e 4357733	Accelerator Pedal - Dual Throttle Pedal	1
1	**b** 4258146	Pedal Assy - Reverse Wldmt	1
1	**e** 4357736	Pedal Assy (Reverse wldmt)	1
2	4659786	Pad - Direction	2
3	4171457	Bushing	6
4	**c** 4168933	Shaft	2
4	**f** 4378710	Shaft	2
5	4645936	Capscrew	4
6	320155	Washer	5
7	4660611	Sensor (Throttle)	1
8	4168946	Plate	1
9	4170106	Spring (Compression)	4
10	**c** 320158	Washer	4
10	**f** 4378713	Washer	4
11	313828	Nut	4
12	287844	Capscrew	2
13	**c** 4168947	Mount , Shaft	1
13	**f** 4378711	Mount , Shaft	1
14	**b** 4258147	Brake Pedal - Arm Wldmt	1
14	**d** 4357737	Brake Pedal - Arm Wldmt	1
14	**g** 4384130	Brake Pedal - Arm Wldmt	1
15	4659775	Pad - Pedal Stop	1
16	**c** 1678361	Bolt	4
16	**f** 4378712	Bolt	4
17	4177273	Spring	1
18	4177272	Bracket	1
19	4297504	Washer	2
20	**b** 292501	Capscrew	2
20	**e** 287817	Capscrew	2
21	4129140	Sensor (Brake Position)	1
22	1565407	Nut	2
23	**b** 4238400	Gear - Pedal Position Sensor Assembly	1
23	4223111	Gear - Pedal Position Sensor	1
23	**e** 4344217	Gear - Pedal Position Sensor Assembly	1
24	302427	Roll Pin	1
25	4168940	Gear - Pedal Position Sensor	1
26	4223112	Cover	1
27	2046866	Capscrew	1
28	**b** 4258144	Pedal Assy - Fwd Wldmt	1
28	**e** 4357735	Pedal Assy - Fwd Wldmt	1
29	4701964	Bushing - Dopple Pedal	1
30	4702299	Bushing - Spring Anchor	1
31	**a e** 4357734	Accelerator Pedal Mounting	1
32	4120965	Screw	4
33	~~4693986~~		
	4737345	Cover (w/o HVAC)	1
33	~~4693986~~		
	4737345	Cover (w/ HVAC)	1
34	1534417	Capscrew	2

©2026 HYSTER COMPANY

THROTTLE PEDAL
DUAL

ITEM	PART NO.	DESCRIPTION	QTY
35	4686315	Wire Harness - Dual Pedal Jumper (☞Figure 11-108).....	1
35	4737707	Wire Harness - Dual Pedal Jumper (Alternate Part)	1
36	4140361	Cable Clip	1
37	1500912	Clip	1
38	1582464	Fastener	1

FOOTNOTES:

a Part is ghosted on primary view for clarity.
b → 12/2022
c → 3/2024
d 12/2022 ↔ 4/2024
e 12/2022 →
f 3/2024 →
g 4/2024 →

©2026 HYSTER COMPANY

NOTES

THROTTLE PEDAL (FIGURE 6-4)

NON-CERT DIESEL (→ 1/2023)

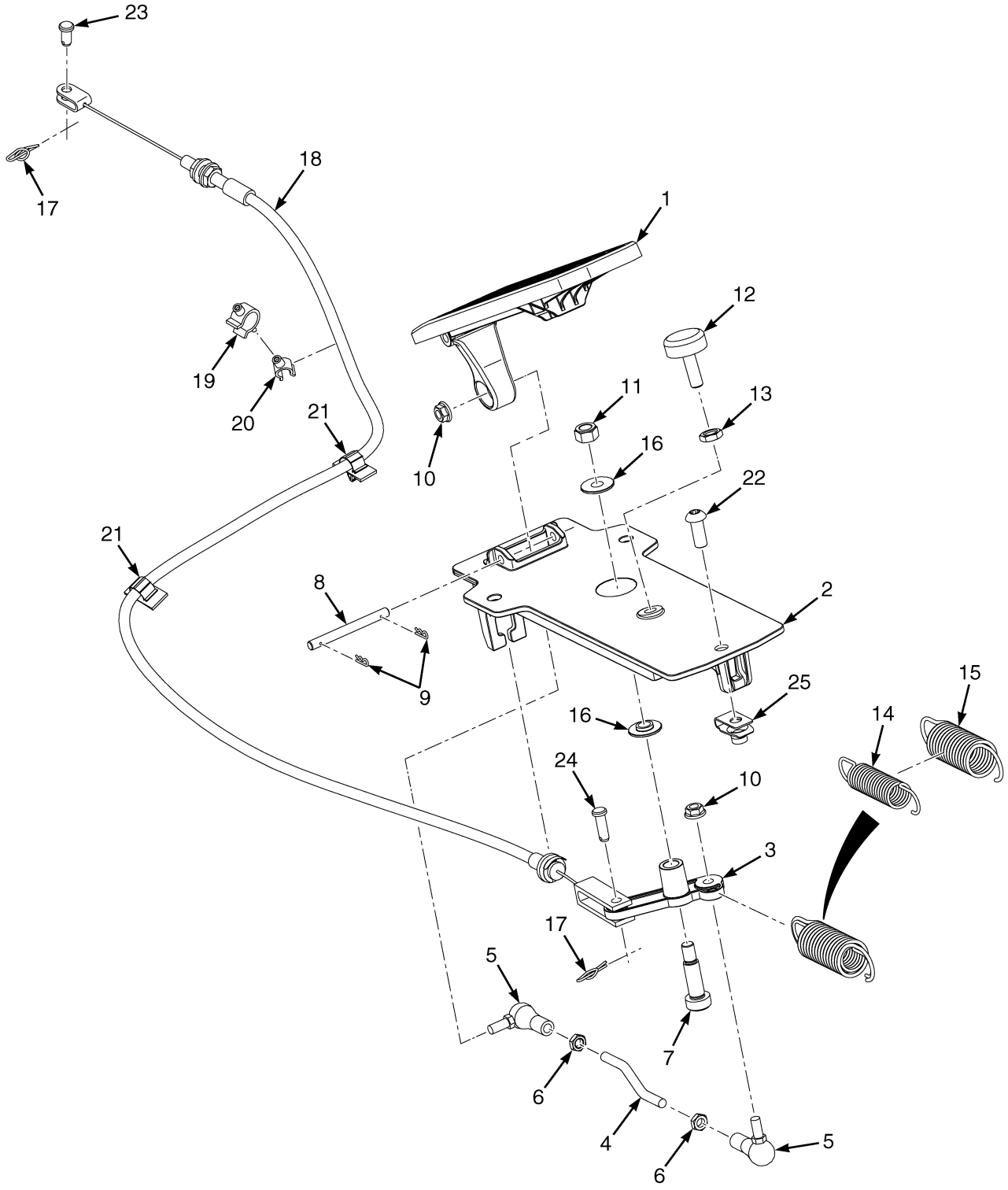

©2026 HYSTER COMPANY

THROTTLE PEDAL

NON-CERT DIESEL (→ 1/2023)

ITEM	PART NO.	DESCRIPTION	QTY
	4693516	Accelerator Pedal - Manual Throttle	1
	a c 4717526	Spacer Manual Throttle Pedal	1
1	4693514	Accelerator Pedal	1
2	4693513	Baseplate	1
3	b 4693515	Bellcrank	1
3	c 4717525	Bellcrank (Manual Throttle Pedal)	1
4	4271288	Linkage	1
4	4271287	Pull Rod	1
5	2027949	Ball Joint	2
6	2308541	Nut	2
7	4309715	Bolt	1
8	4260717	Pin	1
9	18824	Cotter Pin	2
10	~~1307884~~		
	1514429	Nut	2
11	4187690	Locknut	1
12	1530311	Screw (Stop)	1
13	1593335	Nut	1
14	1582301	Spring (Inner)	1
15	1582300	Spring (Outer)	1
16	4309714	Bushing	2
17	1517361	Locking Ring Cotter Pin	2
18	4706515	Throttle Cable	1
19	1573549	Clamp (Swivel)	1
20	4154199	Clamp (Swivel)	1
21	1562088	Clip	3
22	1529990	Screw	3
23	128263	Pin	1
23	2022509	Pin (Alternate Part)	1
24	126	Pin	1
25	1480237	Nut (Foldover)	3

FOOTNOTES:

a Not Illustrated. Used between item 3 belcrank and item 9 bushing.

b → 11/2021

c 11/2021 →

THROTTLE PEDAL (FIGURE 6-5)

NON-CERT DIESEL (2/2023 →)

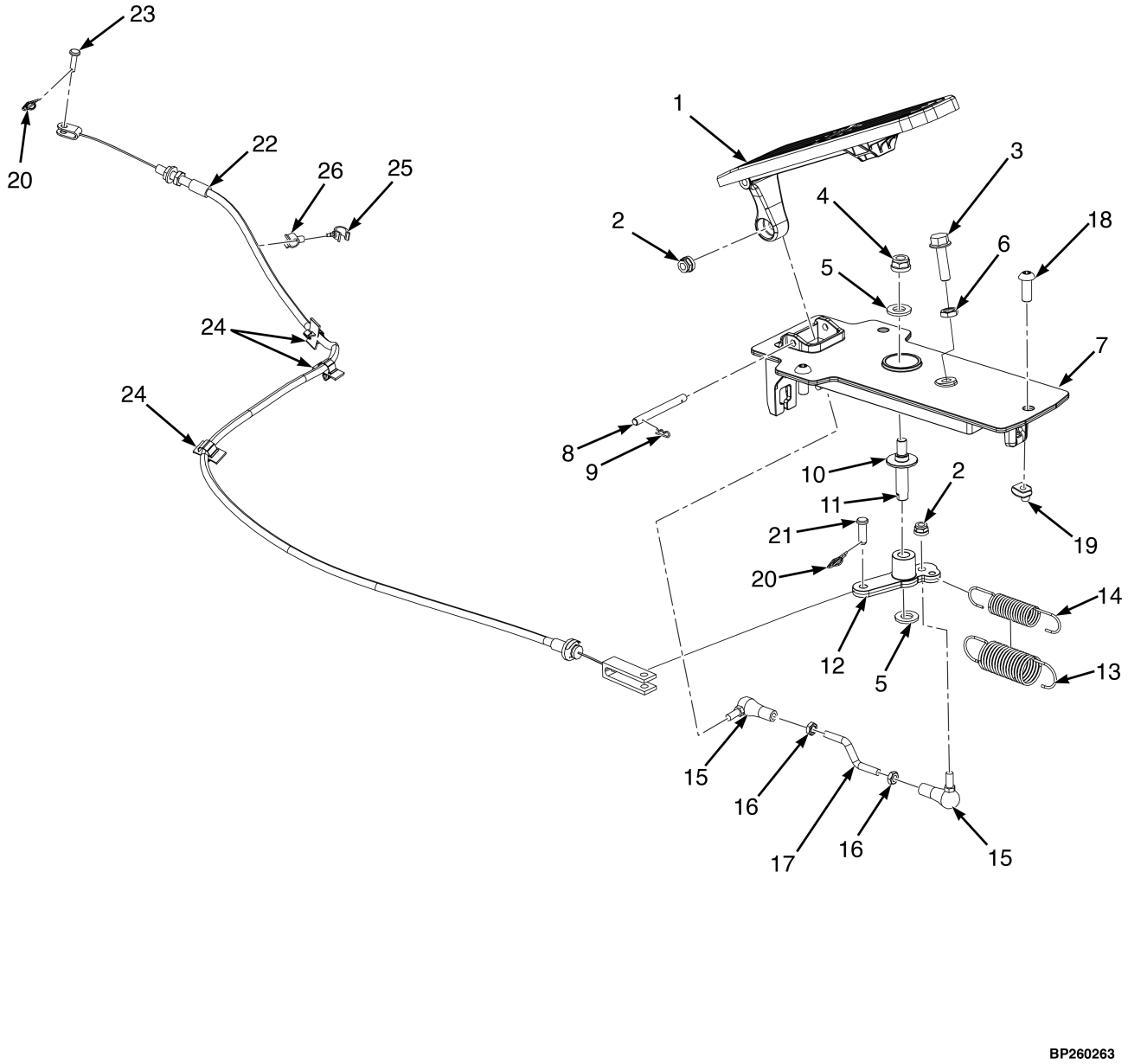

©2026 HYSTER COMPANY

THROTTLE PEDAL

NON-CERT DIESEL (2/2023 →)

ITEM	PART NO.	DESCRIPTION	QTY
1	4693516	Accelerator Pedal - Manual Throttle	1
1	4693514	Accelerator Pedal	1
2	4187689	Locknut	2
2	4733148	Locknut (Alternate Part)	2
3	4185430	Capscrew	1
3	4368082	Stop (Screw) (Alternate Part)	1
4	4187690	Locknut	1
4	302400	Nut (Alternate Part)	1
5	1581557	Washer	2
6	1593335	Nut	1
7	4693513	Baseplate	1
8	4260717	Pin	1
9	18824	Cotter Pin	2
10	4724616	Pivot (Bolt)	1
11	2305586	Cotter Pin	1
12	4717524	Bellcrank	1
13	4360048	Spring (Outer)	1
14	4360049	Spring (Inner)	1
15	4271288	Linkage	1
15	2027949	Ball Joint	2
16	2308541	Nut	2
17	4271287	Pull Rod	1
18	1529990	Screw	3
19	1480237	Nut (Foldover)	3
20	1517361	Locking Ring Cotter Pin	2
21	126	Pin	1
22	4706515	Throttle Cable	1
23	2022509	Pin	1
24	1562088	Clip	3
25	4154199	Clamp (Swivel)	1
26	1573549	Clamp (Swivel)	1

©2026 HYSTER COMPANY

NOTES

©2026 HYSTER COMPANY

7 EXHAUST SYSTEM

SECTION 7
EXHAUST SYSTEM

DESCRIPTION	PAGE
CATALYTIC CONVERTER	7-6
DIESEL PARTICULATE FILTER	
2.1L	7-24
EXHAUST SYSTEM	
2.2L LPG/BI-FUEL - WITH CATALYTIC CONVERTER	7-14
2.2L LPG/BI-FUEL - WITHOUT CATALYTIC CONVERTER	7-16
2.2L LPG/BI-FUEL - WITH RESONATOR	7-18
3.0L AND 3.3L - LOW EXIT	7-20
3.0L AND 3.3L - OVERHEAD EXIT	7-22
LOW EXIT - 2.1L WITH DOC	7-2
LOW EXIT - 2.1L WITH DPF	7-4
OVERHEAD EXIT 2.1L WITH DOC	7-10
OVERHEAD EXIT 2.1L WITH DPF	7-12
EXHAUST WRAP	
2.1L	7-8

©2026 HYSTER COMPANY

EXHAUST SYSTEM (FIGURE 7-1)
LOW EXIT — 2.1L WITH DOC

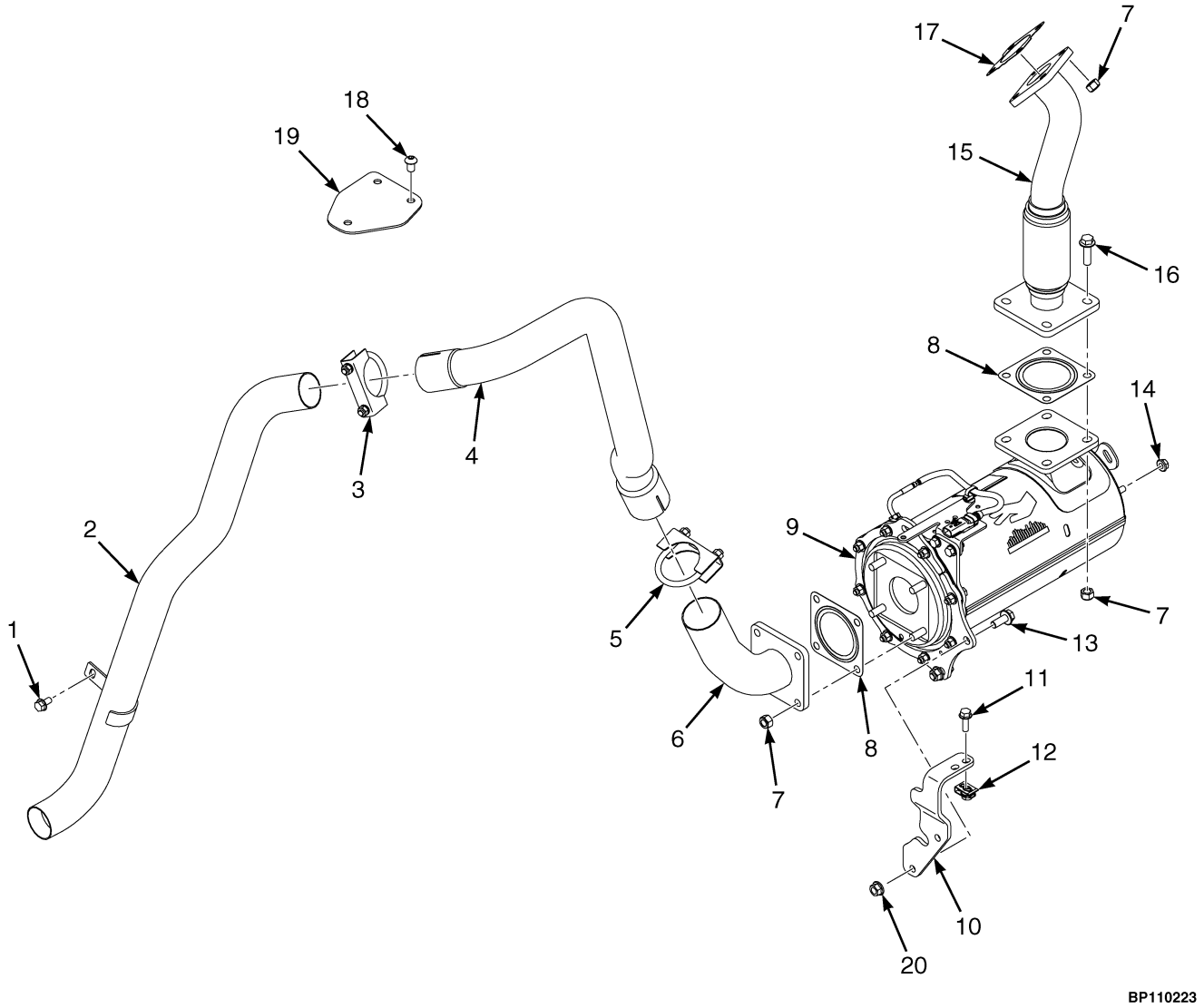

©2026 HYSTER COMPANY

EXHAUST SYSTEM

LOW EXIT – 2.1L WITH DOC

ITEM	PART NO.	DESCRIPTION	QTY
1	~~4109993~~		
	1527879	Capscrew	1
2	4305018	Tail Pipe - SWB Low Exit	1
2	4305019	Tail Pipe - LWB Low Exit	1
3	30370	Clamp	1
3	4264371	Clamp (Optional)	1
4	4256694	Exhaust Pipe	1
5	30371	Clamp	1
5	4264372	Clamp (Alternate Part)	1
6	4238207	Exhaust Pipe	1
7	4288212	Locknut	12
8	4068364	Gasket	2
9	4676447	Catalytic Converter - 2.1L w/ DOC	1
10	4204584	Bracket - DOC Mounting Bar	1
10	4323953	Bracket - DOC Mounting Bar (Alternate Part)	1
11	1510113	Capscrew	2
12	4272640	Nut	2
13	1510117	Capscrew	2
14	~~1382472~~		
	1502543	Nut	2
15	4243721	Exhaust Pipe	1
16	1527885	Capscrew	4
17	4251936	Gasket	1
18	4044977	Capscrew	3
19	4272157	Cover Plate - Counterweight, Low Exit Exhaust	1
20	1460477	Nut	2

©2026 HYSTER COMPANY

EXHAUST SYSTEM (FIGURE 7-2)
LOW EXIT — 2.1L WITH DPF

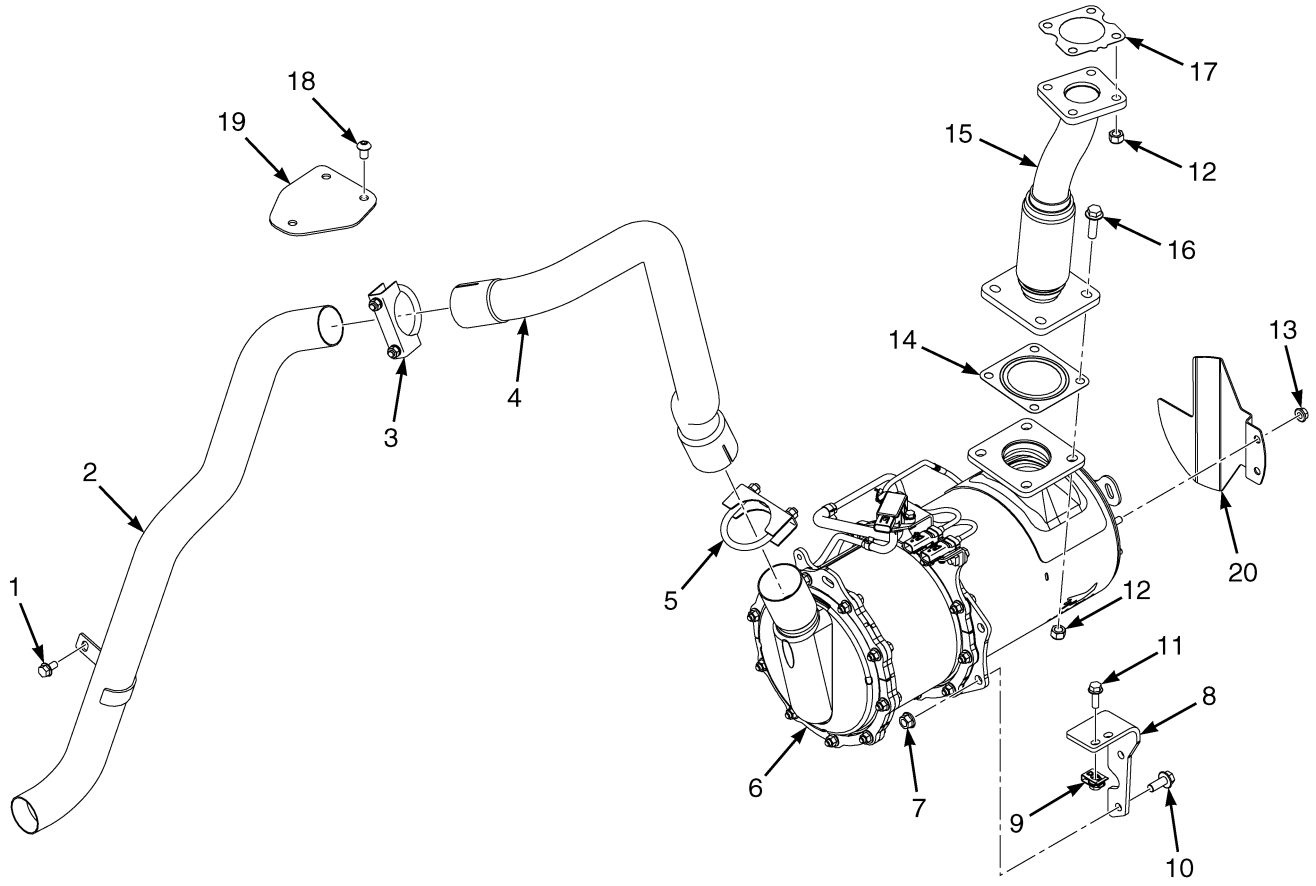

BP110222

©2026 HYSTER COMPANY

EXHAUST SYSTEM

LOW EXIT – 2.1L WITH DPF

ITEM	PART NO.	DESCRIPTION	QTY
1	~~4109993~~		
	1527879	Capscrew	1
2	4339990	Tail Pipe - SWB Low Exit	1
2	4339991	Tail Pipe - LWB Low Exit	1
3	30370	Clamp	1
3	4264371	Clamp (Optional)	1
4	4256694	Exhaust Pipe	1
5	30371	Clamp	1
5	4264372	Clamp (Alternate Part)	1
6	4305092	Diesel Particulate Filter (Assembly) (☞Figure 7-12)	1
7	1460477	Nut	2
8	4204583	Bracket - DPF Mount, Rear	1
8	4323952	Bracket - DPF Mount, Rear (Alternate Part)	1
9	4272640	Nut	2
10	1510117	Capscrew	2
11	1510113	Capscrew	2
12	4288212	Locknut	8
13	~~1382472~~		
	1502543	Nut	2
14	4068364	Gasket	1
15	4234929	Exhaust Pipe	1
16	1527885	Capscrew	4
17	4251936	Gasket	1
18	4044977	Capscrew	3
19	4272157	Cover Plate - Counterweight, Low Exit Exhaust	1
20	4291709	Heat Shield - DPF	1

©2026 HYSTER COMPANY

CATALYTIC CONVERTER (FIGURE 7-3)

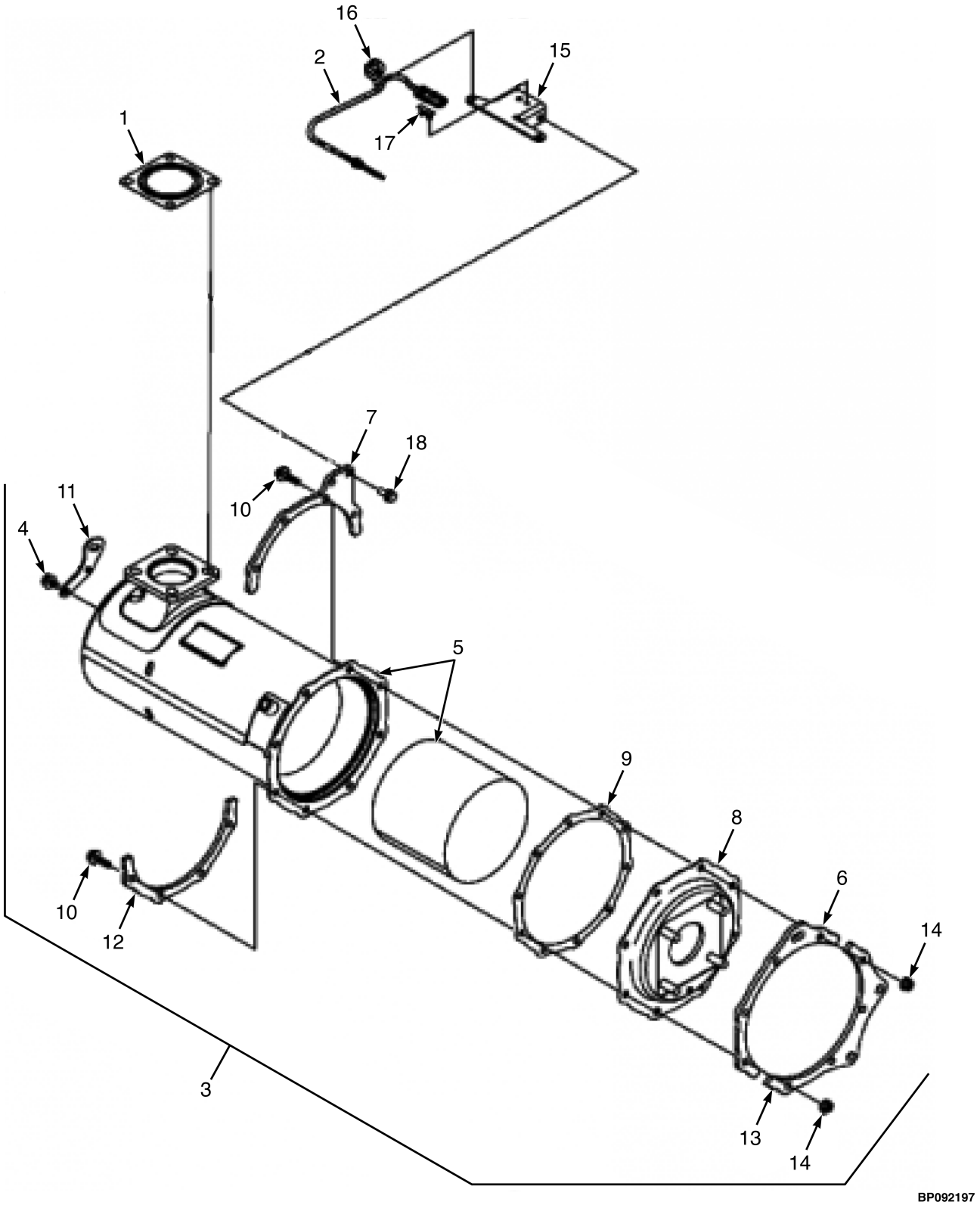

©2026 HYSTER COMPANY

CATALYTIC CONVERTER

ITEM	PART NO.	DESCRIPTION	QTY
	4676447	Catalytic Converter - 2.1L w/ DOC	1
1	4068364	Gasket	2
2	4380248	Thermal Sensor	1
3	4380249	Filter	1
4	1599448	Bolt	2
5	4380250	Case (DOC)	1
6	4380256	Brace , DPF C	1
7	4380257	Brace , DPF C	1
8	4380251	Flange (Outlet)	1
9	4380252	Gasket	1
10	4304911	Bolt	8
11	4380253	Roller , Lifter (DPF)	1
12	4380254	Brace , DPF A	1
13	4380255	Brace , DPF B	1
14	2068378	Nut	8
15	4380258	Bracket (Sensor)	1
16	4304491	Clip	1
17	4305028	Clip	1
18	1599471	Bolt	2

©2026 HYSTER COMPANY

EXHAUST WRAP (FIGURE 7-4)

2.1L

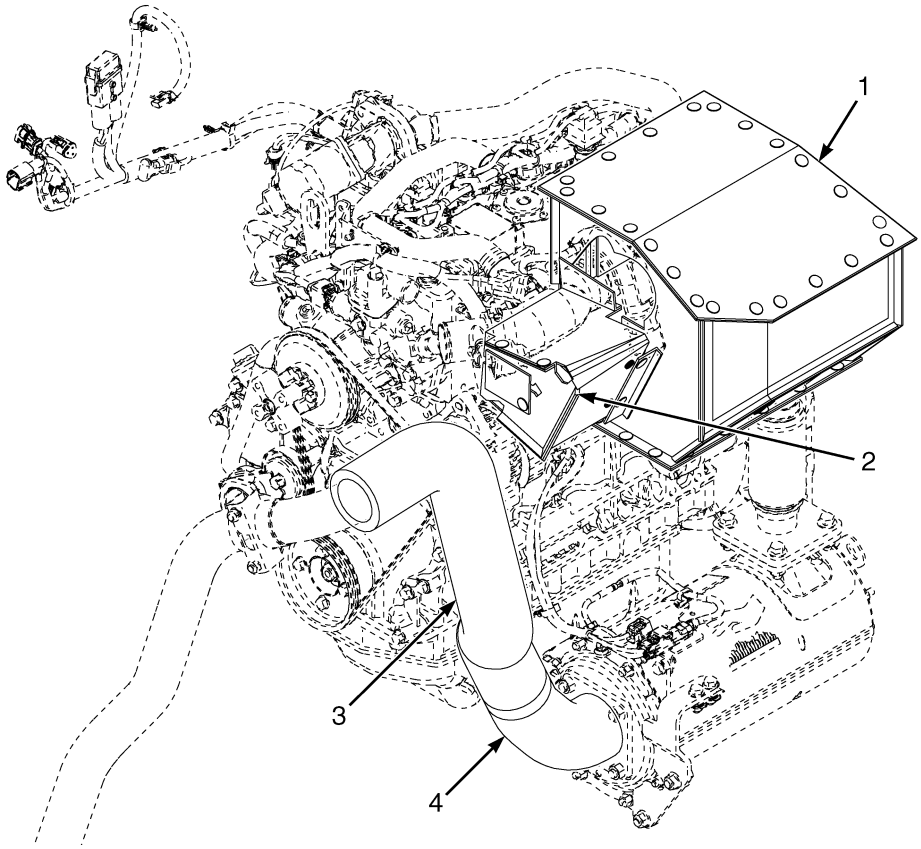

ITEM	PART NO.	DESCRIPTION	QTY
1	4238216	Exhaust Wrap - 2.1L Turbo	1
2	4238212	Exhaust Wrap - 2.1L Manifold	1
3	4694108	Exhaust Wrap - 2.1L Dsl, Upper	1
4	**a** 4694178	Exhaust Wrap - DOC Lower	1

FOOTNOTES:

a DOC Only

©2026 HYSTER COMPANY

NOTES

EXHAUST SYSTEM (FIGURE 7-5)
OVERHEAD EXIT 2.1L WITH DOC

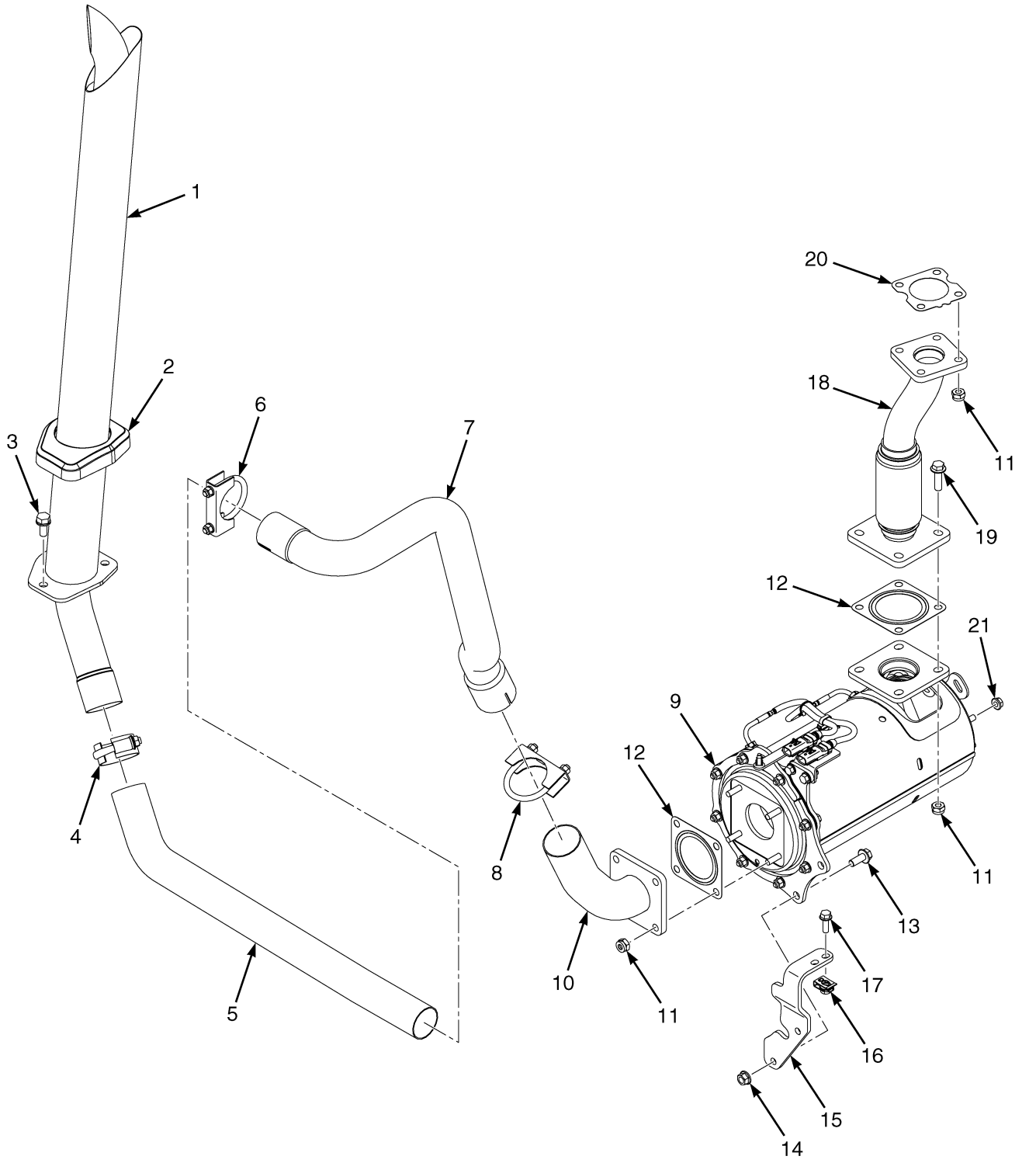

©2026 HYSTER COMPANY

EXHAUST SYSTEM
OVERHEAD EXIT 2.1L WITH DOC

ITEM	PART NO.	DESCRIPTION	QTY
1	4246305	Overhead Exhaust	1
2	4693169	Cover	1
3	1564515	Capscrew	3
4	4256951	Clamp	1
5	4307402	Exhaust Pipe	1
6	30370	Clamp	1
6	4264371	Clamp (Optional)	1
7	4256694	Exhaust Pipe	1
8	30371	Clamp	1
8	4264372	Clamp (Optional)	1
9	4676447	Catalytic Converter - 2.1L w/ DOC	1
10	4238207	Exhaust Pipe	1
11	4288212	Locknut	12
12	4068364	Gasket	2
13	1510117	Capscrew	2
14	1460477	Nut	2
15	4204584	Bracket - DOC Mounting Bar	1
15	4323953	Bracket - DOC Mounting Bar (Alternate Part)	1
16	4272640	Nut	2
17	1510113	Capscrew	2
18	4234931	Exhaust Pipe	1
19	1527885	Capscrew	4
20	4251936	Gasket	1
21	~~1382472~~		
	1502543	Nut	2

©2026 HYSTER COMPANY

EXHAUST SYSTEM (FIGURE 7-6)
OVERHEAD EXIT 2.1L WITH DPF

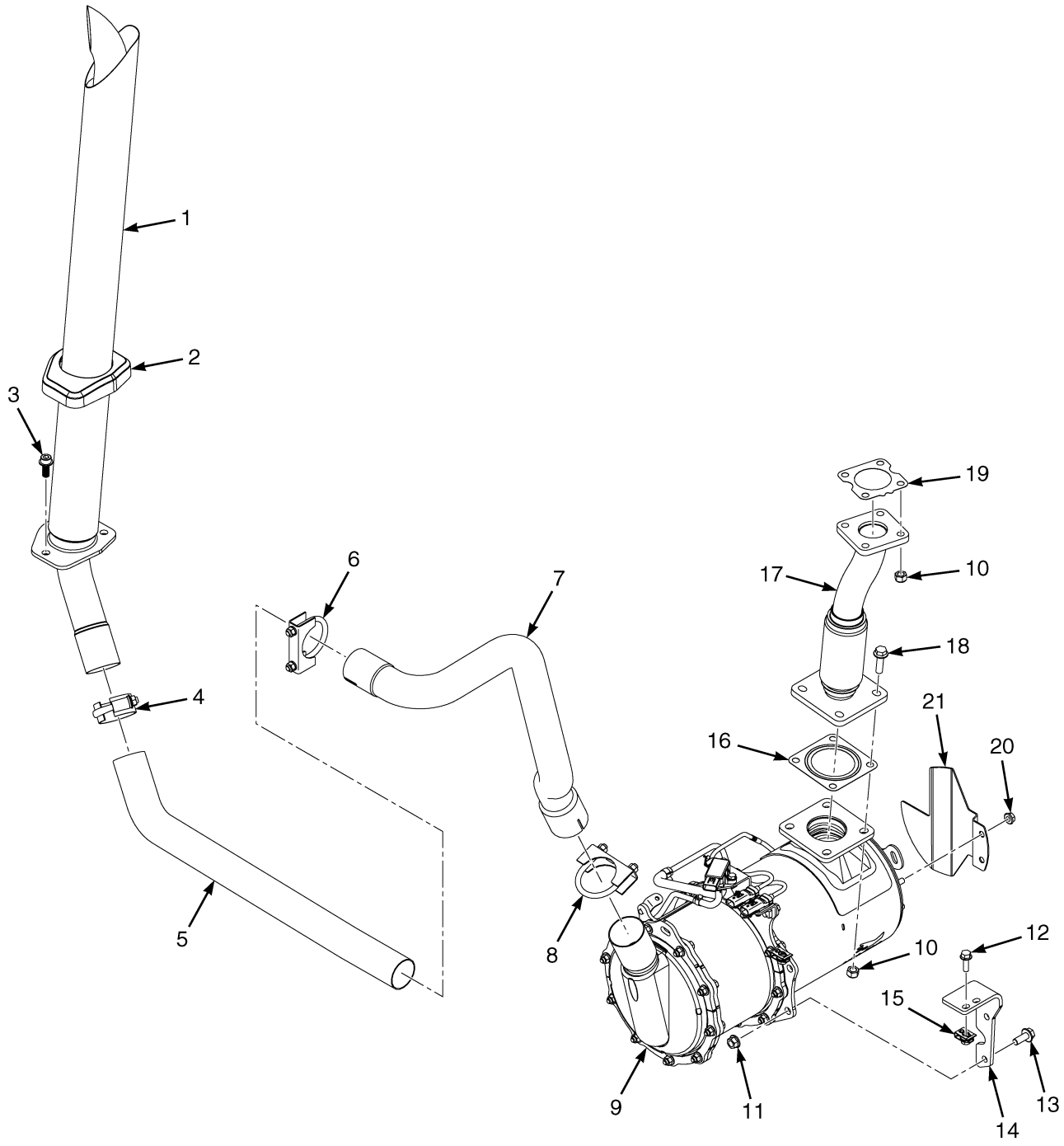

©2026 HYSTER COMPANY

EXHAUST SYSTEM

OVERHEAD EXIT 2.1L WITH DPF

ITEM	PART NO.	DESCRIPTION	QTY
1	4308107	Overhead Exhaust	1
2	4693169	Cover	1
3	1564515	Capscrew	3
4	4256951	Clamp	1
5	4307400	Exhaust Pipe	1
5	4325532	Exhaust Pipe (Alternate Part)	1
6	30370	Clamp	1
6	4264371	Clamp (Optional)	1
7	4256694	Exhaust Pipe	1
8	30371	Clamp	1
8	4264372	Clamp (Optional)	1
9	4305092	Diesel Particulate Filter (Assembly) (☞Figure 7-12)	1
10	4288212	Locknut	8
11	1460477	Nut	2
12	1510113	Capscrew	2
13	1510117	Capscrew	2
14	4204583	Bracket - DPF Mount, Rear	1
14	4323952	Bracket - DPF Mount, Rear (Alternate Part)	1
15	4272640	Nut	2
16	4068364	Gasket	1
17	4234929	Exhaust Pipe	1
18	1527885	Capscrew	4
19	4251936	Gasket	1
20	~~1382472~~		
	1502543	Nut	2
21	4291709	Heat Shield - DPF	1

©2026 HYSTER COMPANY

EXHAUST SYSTEM (FIGURE 7-7)

2.2L LPG/BI-FUEL — WITH CATALYTIC CONVERTER

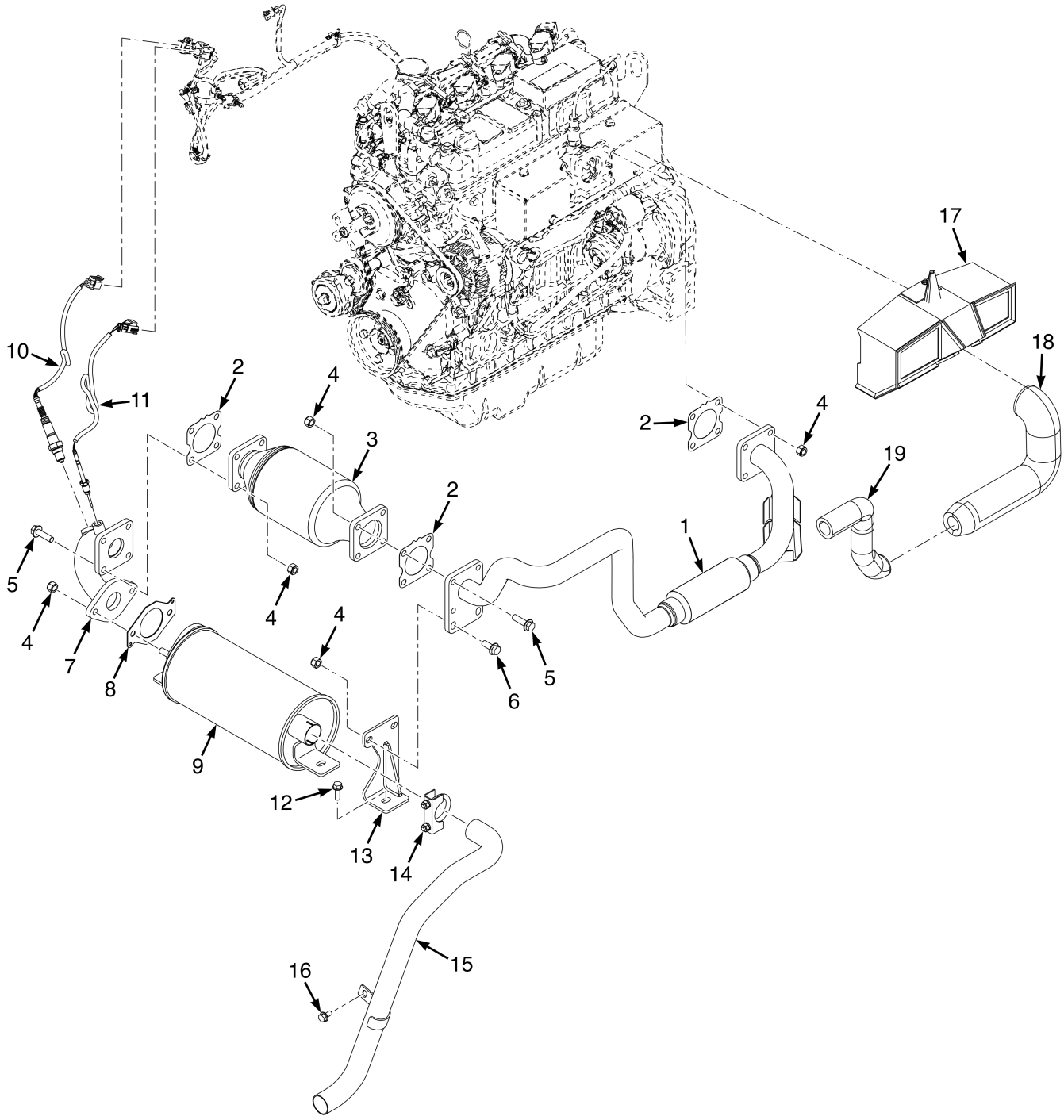

©2026 HYSTER COMPANY

EXHAUST SYSTEM

2.2L LPG/BI-FUEL – WITH CATALYTIC CONVERTER

ITEM	PART NO.	DESCRIPTION	QTY
1	4238215	Exhaust Pipe	1
1	4337628	Exhaust Pipe (Alternate Part)	1
2	4251936	Gasket	3
3	4682022	Catalytic Converter	1
4	4288212	Locknut	16
5	1527885	Capscrew	8
6	1510117	Capscrew	2
7	4238214	Exhaust Pipe	1
8	4098977	Gasket	1
9	4673754	Muffler	1
10	4674545	Sensor - O2 Sensor Heated	1
11	4687257	Sensor - Exhaust EGT	1
12	1510113	Capscrew	2
13	4291319	Bracket Wldmt	1
14	63117	Clamp	1
15	4305016	Exhaust Pipe - Low Exit (2.0-2.5T)	1
15	4305017	Exhaust Pipe - Low Exit (2.5(s)-3.5T)	1
16	~~4109993~~		
	1527879	Capscrew	1
17	4238209	Exhaust Wrap (Manifold)	1
17	~~4335166~~		
	4393190	Exhaust Wrap (Manifold) (Alternate Part)	1
18	**a** 4694109	Exhaust Wrap	1
18	**b** 4724143	Exhaust Wrap (Front)	1
19	**b** 4724144	Exhaust Wrap (Rear)	1

FOOTNOTES:

a → 8/2022

b 8/2022 →

EXHAUST SYSTEM (FIGURE 7-8)

2.2L LPG/BI-FUEL — WITHOUT CATALYTIC CONVERTER

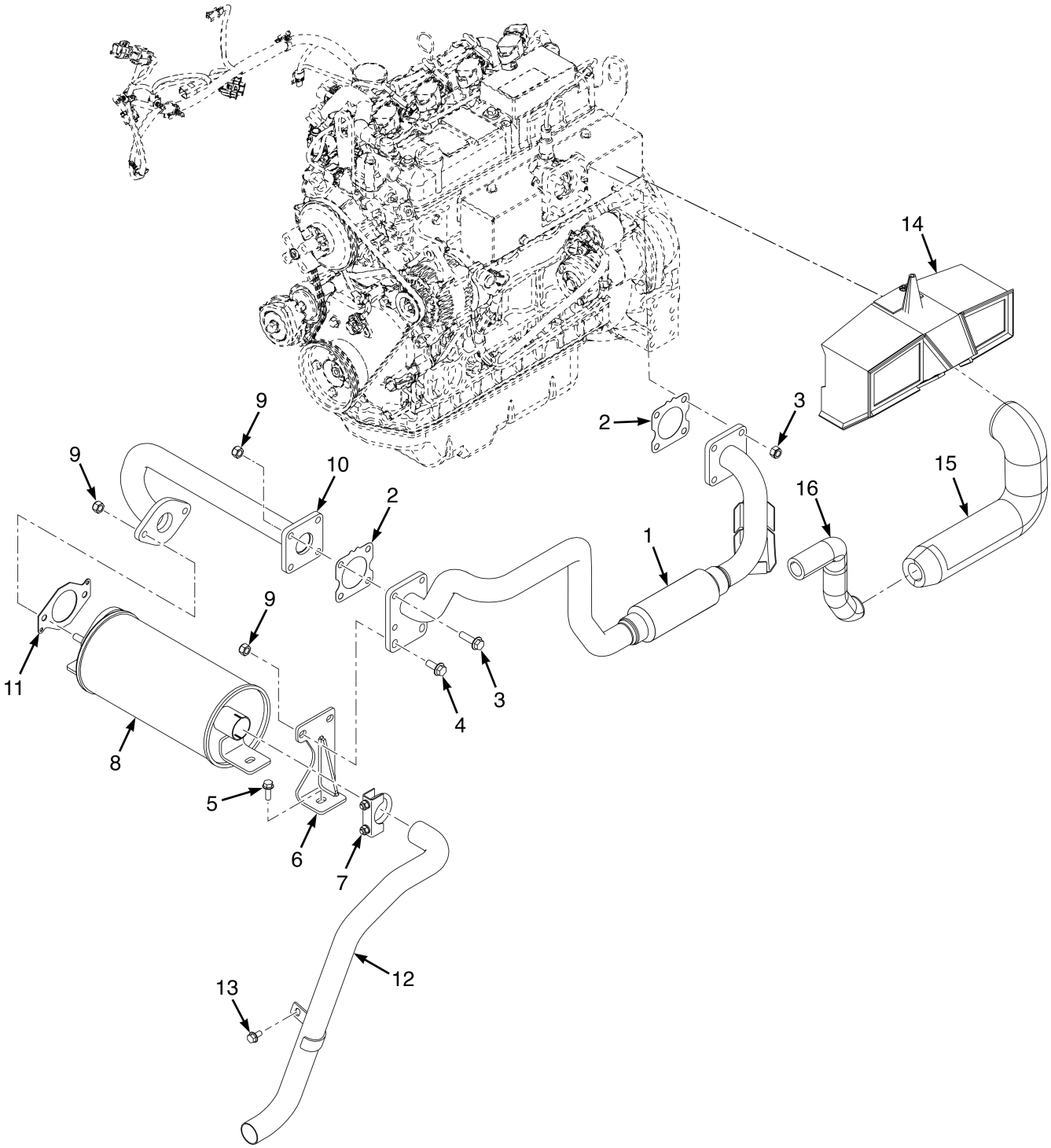

©2026 HYSTER COMPANY

EXHAUST SYSTEM

2.2L LPG/BI-FUEL – WITHOUT CATALYTIC CONVERTER

ITEM	PART NO.	DESCRIPTION	QTY
1	4238215	Exhaust Pipe	1
2	4251936	Gasket	2
3	1527885	Capscrew	4
4	1510117	Capscrew	2
5	1510113	Capscrew	2
6	4291319	Bracket Wldmt	1
7	63117	Clamp	1
8	4673754	Muffler	1
9	4288212	Locknut	12
10	4248348	Exhaust Pipe	1
11	4098977	Gasket	1
12	4305016	Exhaust Pipe - Low Exit (2.0-2.5T)	1
12	4305017	Exhaust Pipe - Low Exit (2.5(s)-3.5T)	1
13	~~4109993~~		
	1527879	Capscrew	1
14	4238209	Exhaust Wrap (Manifold)	1
14	~~4335166~~		
	4393190	Exhaust Wrap (Manifold) (Alternate Part)	1
15	**a** 4694109	Exhaust Wrap	1
15	**b** 4724143	Exhaust Wrap (Front)	1
16	**b** 4724144	Exhaust Wrap (Rear)	1

FOOTNOTES:

a → 8/2022

b 8/2022 →

EXHAUST SYSTEM (FIGURE 7-9)
2.2L LPG/BI-FUEL — WITH RESONATOR

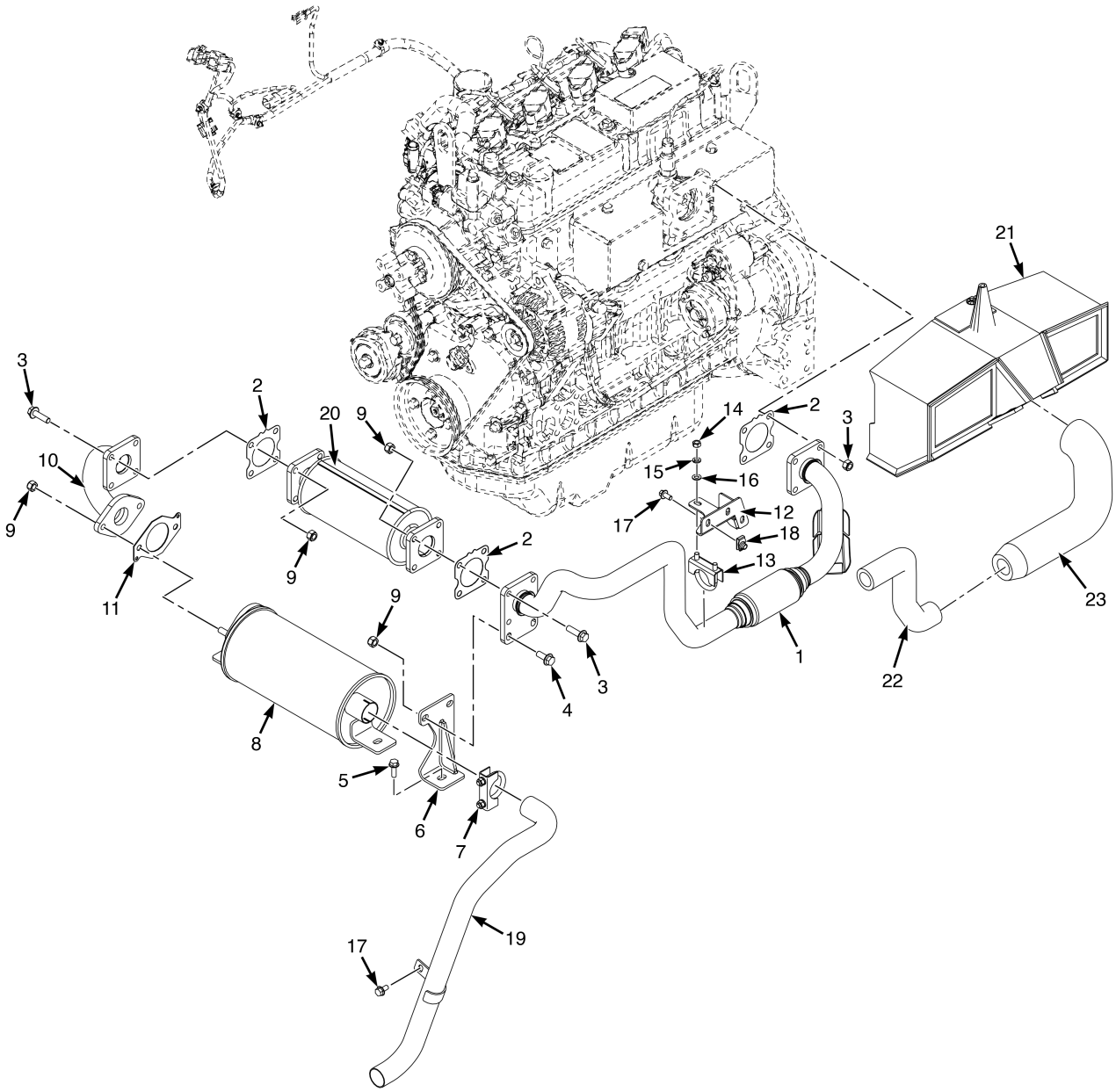

©2026 HYSTER COMPANY

EXHAUST SYSTEM

2.2L LPG/BI-FUEL – WITH RESONATOR

ITEM	PART NO.	DESCRIPTION	QTY
1	4337628	Exhaust Pipe	1
2	4251936	Gasket	2
3	1527885	Capscrew	8
4	1510117	Capscrew	2
5	1510113	Capscrew	2
6	4291319	Bracket Wldmt	1
7	63117	Clamp	1
8	4673754	Muffler	1
9	4288212	Locknut	16
10	4358132	Exhaust Pipe	1
11	4098977	Gasket	1
12	4351175	Bracket Wldmt	1
13	195769	Clamp	1
14	15055	Nut	2
15	15155	Lockwasher	2
16	~~4166624~~		
	1581556	Washer	1
17	1527889	Capscrew	4
18	1480237	Nut (Foldover)	3
19	4305016	Exhaust Pipe - Low Exit	1
20	4727492	Resonator	1
21	~~4335166~~		
	4393190	Exhaust Wrap (Manifold)	1
22	4724144	Exhaust Wrap (Rear)	1
23	4724143	Exhaust Wrap (Front)	1

©2026 HYSTER COMPANY

EXHAUST SYSTEM (FIGURE 7-10)
3.0L AND 3.3L — LOW EXIT

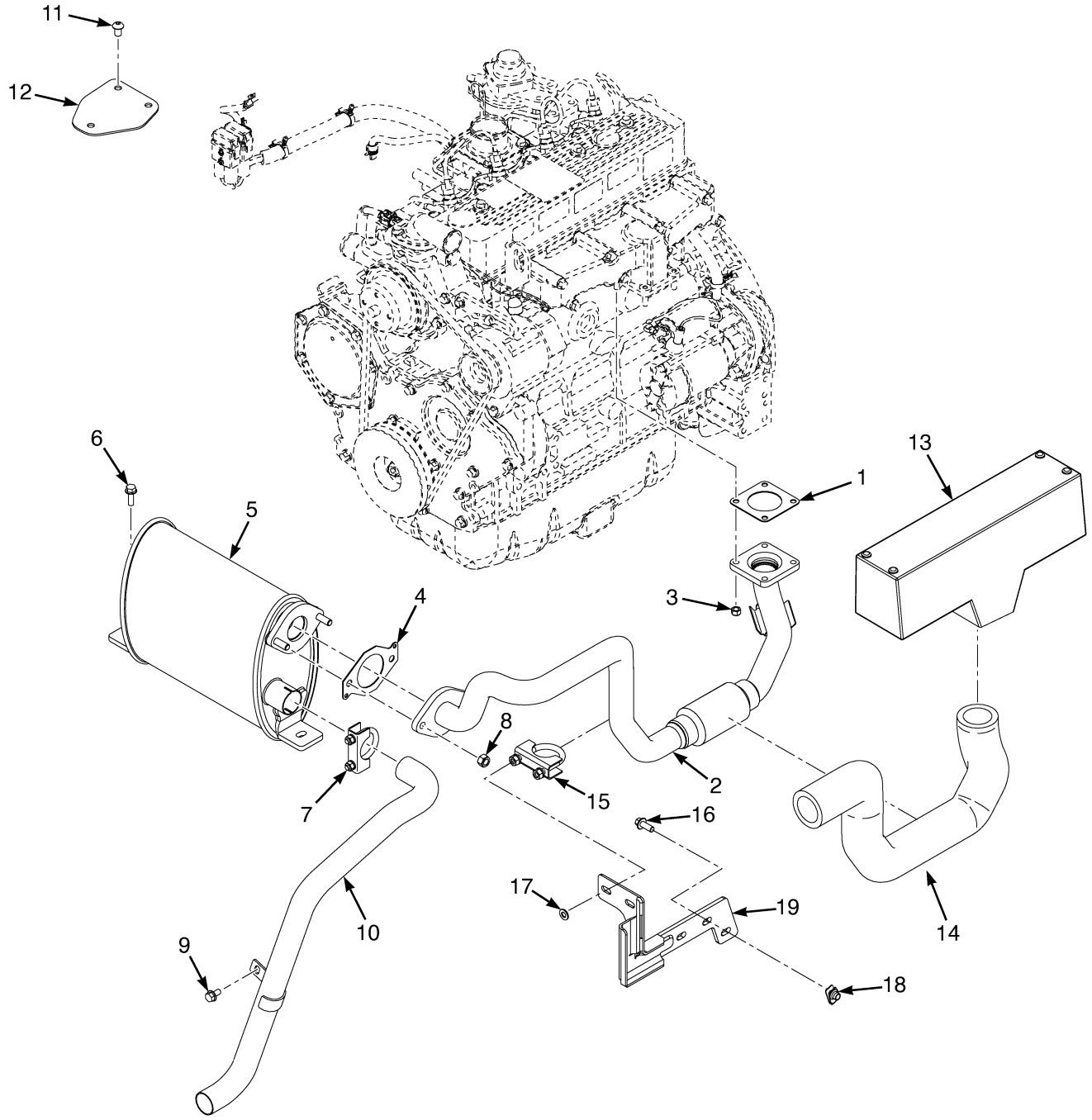

©2026 HYSTER COMPANY

EXHAUST SYSTEM

3.0L AND 3.3L – LOW EXIT

ITEM	PART NO.	DESCRIPTION	QTY
1	1532363	Gasket	1
2	4304118	Exhaust Pipe	1
3	4288211	Locknut	4
4	4098977	Gasket	1
5	4706197	Muffler	1
6	1510113	Capscrew	2
7	63117	Clamp	1
8	4288212	Locknut	2
9	~~4109993~~		
	1527879	Capscrew	1
10	4305016	Exhaust Pipe - Low Exit (H40A-H50A)	1
10	4305017	Exhaust Pipe - Low Exit (H55A-H70A)	1
11	4044977	Capscrew	3
12	4272157	Cover Plate - Counterweight, Low Exit Exhaust	1
13	4238211	Exhaust Wrap	1
14	4694182	Exhaust Wrap	1
15	195769	Clamp	1
16	1527880	Capscrew	3
17	~~4166624~~		
	1581556	Washer	2
18	1480237	Nut (Foldover)	3
19	4369985	Bracket Wldmt	1

©2026 HYSTER COMPANY

EXHAUST SYSTEM (FIGURE 7-11)
3.0L AND 3.3L — OVERHEAD EXIT

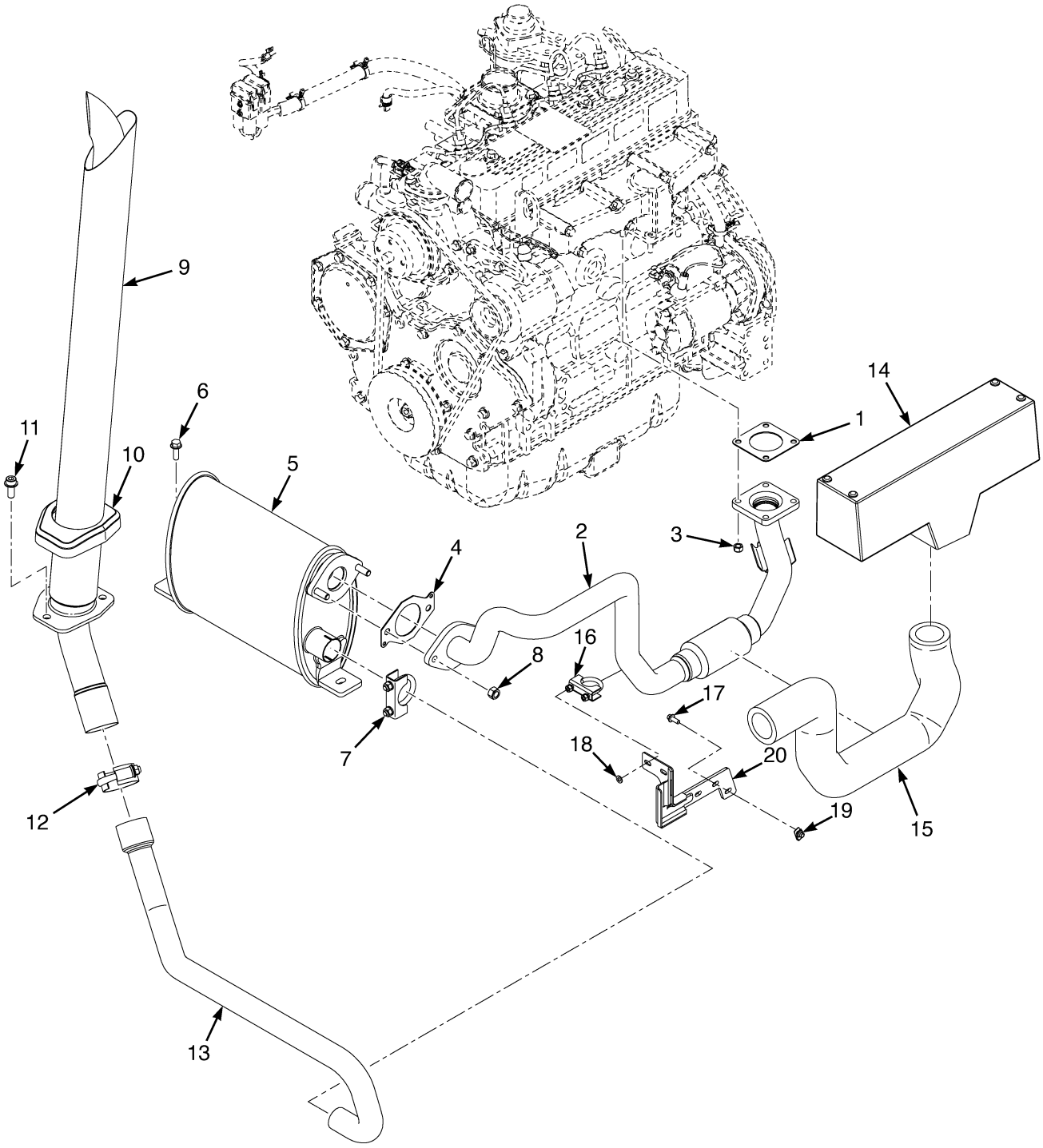

©2026 HYSTER COMPANY

EXHAUST SYSTEM

3.0L AND 3.3L – OVERHEAD EXIT

ITEM	PART NO.	DESCRIPTION	QTY
1	1532363	Gasket	1
2	4304118	Exhaust Pipe	1
3	4288211	Locknut	4
4	4098977	Gasket	1
5	4706197	Muffler	1
6	1510113	Capscrew	1
7	63117	Clamp	1
8	4288212	Locknut	2
9	4246305	Overhead Exhaust	1
10	4693169	Cover	1
11	1564515	Capscrew	3
12	4256951	Clamp	1
13	4268902	Exhaust Pipe	1
14	4238211	Exhaust Wrap	1
15	4694182	Exhaust Wrap	1
16	195769	Clamp	1
17	1527880	Capscrew	3
18	~~4166624~~		
	1581556	Washer	2
19	1480237	Nut (Foldover)	3
20	4369985	Bracket Wldmt	1

DIESEL PARTICULATE FILTER (FIGURE 7-12)

2.1L

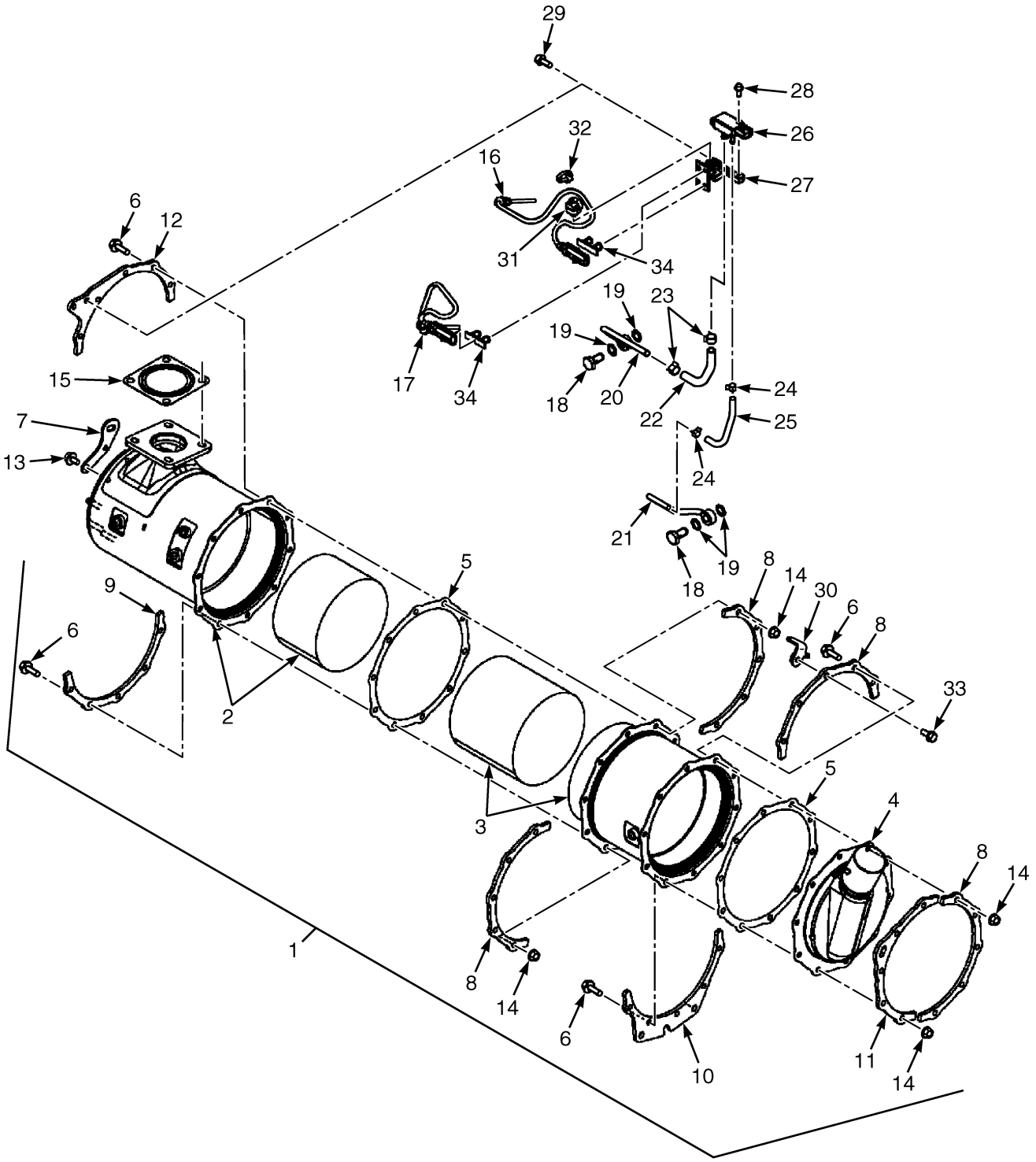

©2026 HYSTER COMPANY

DIESEL PARTICULATE FILTER

2.1L

ITEM	PART NO.	DESCRIPTION	QTY
1	4305092	Diesel Particulate Filter (Assembly)	1
2	4305093	Case - Diesel Oxidation Catalyst (DOC)	1
3	4305073	Case - Soot Filter (SF)	1
4	4305094	Flange (Outlet)	1
5	4305130	Gasket	2
6	4304911	Bolt	20
7	4305065	Valve Lifter (DPF)	1
8	4305066	Brace	4
9	4305095	Brace	1
10	4305067	Brace	1
11	4305068	Brace	1
12	4305096	Brace	1
13	1599568	Bolt	2
14	2068378	Nut	20
15	4068364	Gasket	1
16	4305049	Sensor (Temperature)	1
17	4305050	Sensor (Temperature)	1
18	4304898	Bolt	2
19	4304912	Gasket (Sensor)	4
20	4305097	Pipe - Pressure Exhaust	1
21	4305098	Pipe - Pressure Exhaust	1
22	4304916	Hose (Pressure)	1
23	4304913	Clip	2
24	4304914	Clip	2
25	4304915	Hose - Pressure Exhaust	1
26	4304887	Sensor (Pressure)	1
27	4305099	Bracket - Sensor Bracket	1
28	4122584	Bolt	2
29	1599471	Bolt	2
30	4305120	Bracket (Wire Harness)	1
31	4304491	Clip	1
32	4304632	Band	1
33	4122583	Bolt	1
34	4305028	Clip	2

©2026 HYSTER COMPANY

NOTES

©2026 HYSTER COMPANY

8 COOLING SYSTEM

SECTION 8
COOLING SYSTEM

DESCRIPTION	PAGE
COOLING SYSTEM	8-4
FAST FAN	
2.2L LPG/BI-FUEL	8-14
HYDRAULIC FAN DRIVE	8-8
RADIATOR	
3-ROW WITH CAC	8-10
3-ROW WITH CAC - ALTERNATE	8-12
RADIATOR MOUNTING AND ANCILLARY PARTS	8-2
RADIATOR SHROUD	
AND ASSOCIATED PARTS - WITHOUT CAC AND WITHOUT HYD FAN DRIVE (5/2025 →)	8-7

©2026 HYSTER COMPANY

RADIATOR MOUNTING AND ANCILLARY PARTS (FIGURE 8-1)

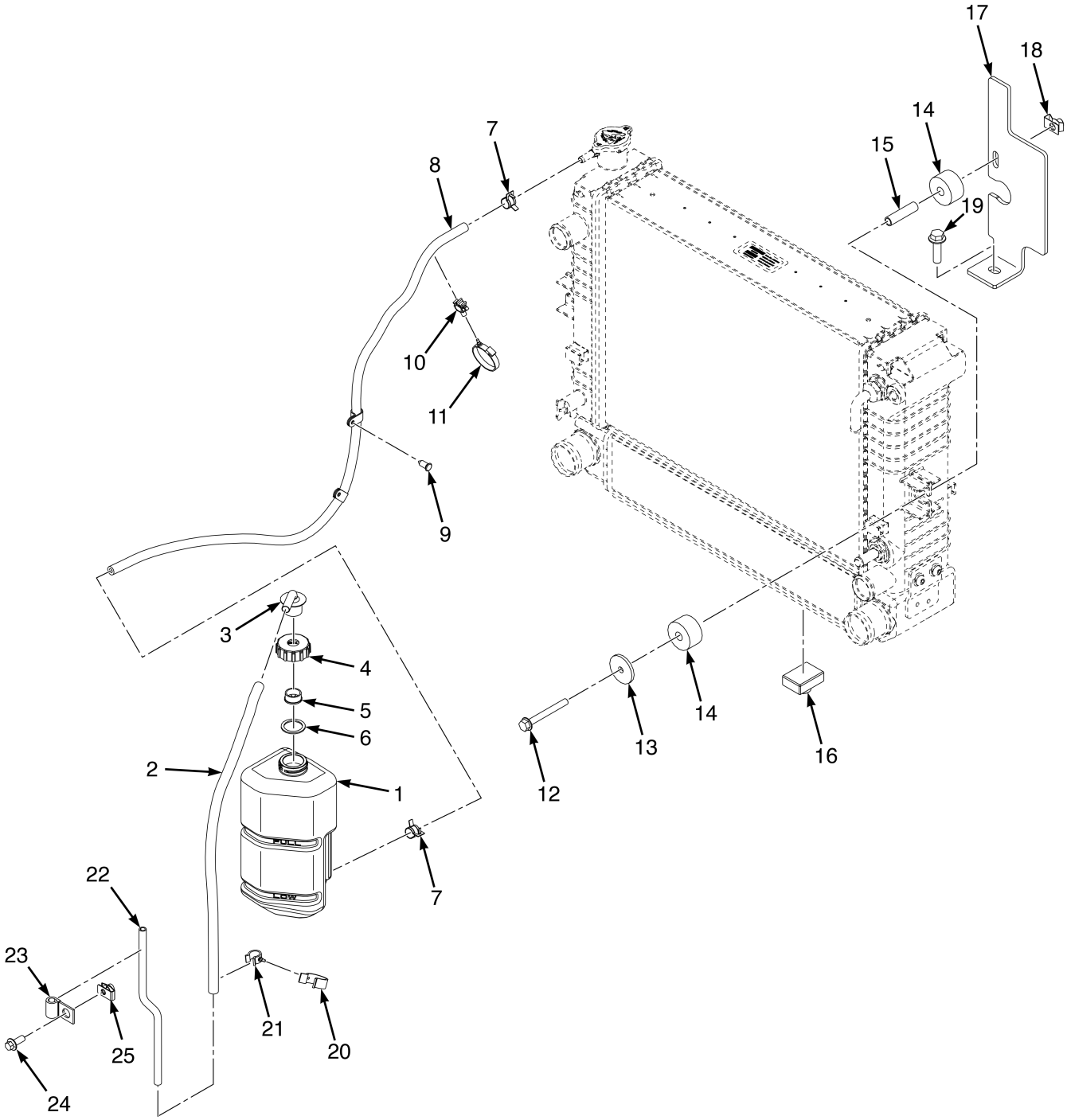

©2026 HYSTER COMPANY

RADIATOR MOUNTING AND ANCILLARY PARTS

ITEM	PART NO.	DESCRIPTION	QTY
1	4675861	Reservoir	1
2	a ~~339735~~		
	1663877	Hose	1
2	c 4690614	Hose	1
3	345453	Outlet (Reservoir)	1
4	345454	Cap	1
5	336550	Bushing	1
6	4127425	Seal	1
7	1625338	Hose Clamp	2
8	1302957	Hose	1
9	c 1582464	Fastener	2
10	4124455	Clamp	1
11	1644398	Clamp (Swivel)	2
11	4160428	Clamp (Swivel Tie) (Alternate Part)	2
12	1587437	Capscrew	2
13	4175769	Washer	2
14	4205335	Rubber Cushion	4
15	2029223	Spacer	2
16	2085801	Rubber Mount	2
17	e 4243738	Bracket - LH	1
17	f 4323730	Bracket - LH	1
17	4243739	Bracket - RH	1
18	1398062	Nut (Fold Over)	2
19	1527885	Capscrew	2
20	c 1542436	Clamp (Swivel)	1
20	1606544	Clamp (Swivel) (Alternate Part)	1
21	c d 1502055	Clamp (Swivel)	1
22	b 4347594	Tube (Coolant Overflow)	1
23	b 154208	Clamp	1
24	b 1527880	Capscrew	1
25	b 1480237	Nut (Foldover)	1

FOOTNOTES:

a 2.1L only.
b 2.1L w/ Cab Only
c 2.2, 3.0 and 3.3L only.
d → 10/2021
e → 6/2021
f 6/2021 →

COOLING SYSTEM (FIGURE 8-2)

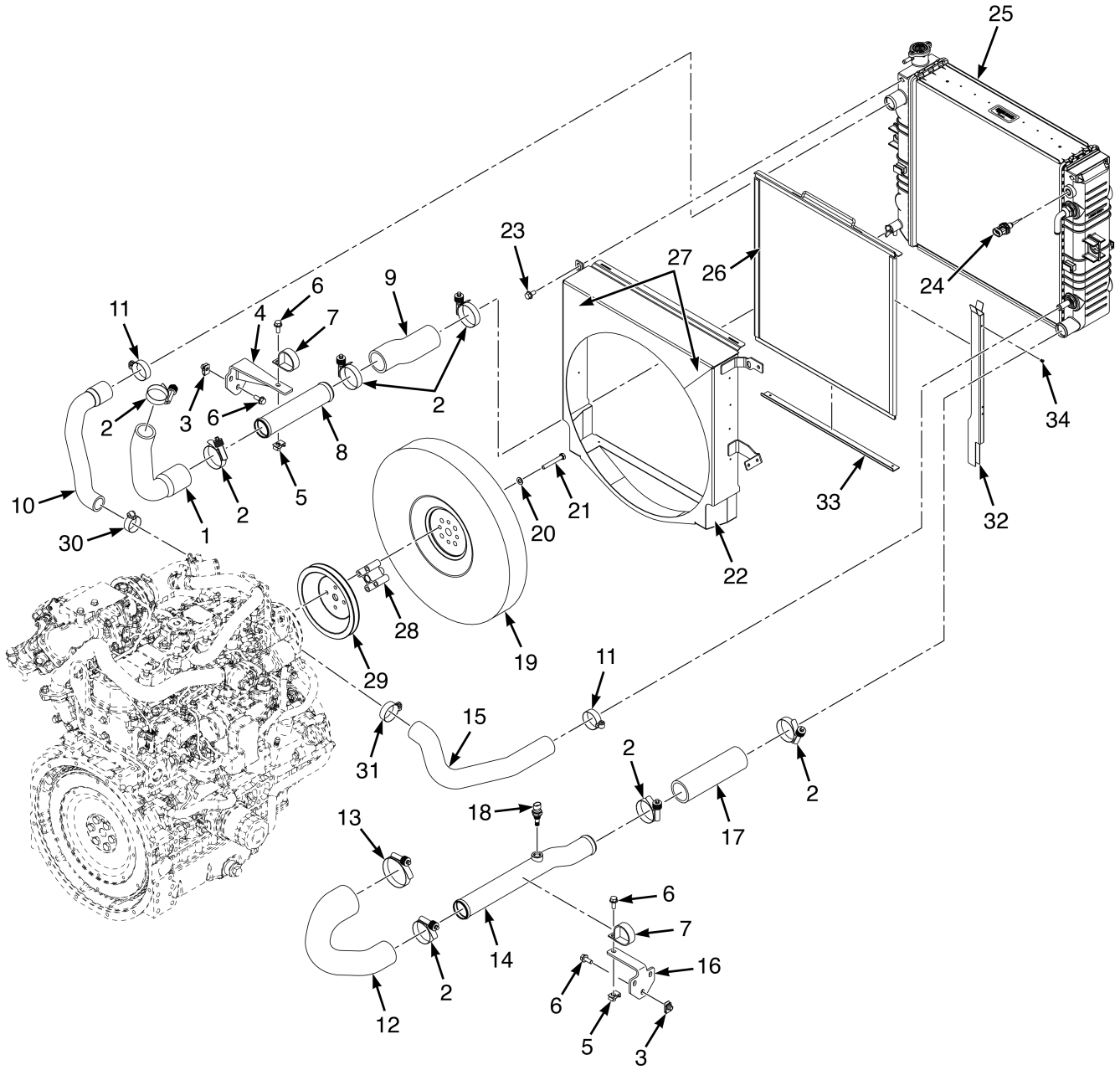

©2026 HYSTER COMPANY

COOLING SYSTEM

KEY:
A: 2.1L and 2.2L w/ DPF or DOC and CAC
B: 2.1L and 2.2L w/o CAC
C: 3.0L and 3.3L w/o CAC
D: 2.1L and 2.2L w/ HST

ITEM	PART NO.	DESCRIPTION	QTY A	QTY B	QTY C	QTY D
1	4683662	Hose - CAC, Hot Side, DPF	1	..	..	..
1	4680476	Hose - CAC, Hot Side, DOC	1	..	..	..
2	4018396	Hose Clamp	8	..	..	..
3	1480237	Nut (Foldover)	6	..	..	..
4	4251484	Bracket Wldmt - CAC Tube - RH Side	1	..	..	..
5	1398062	Nut (Fold Over)	2	..	..	..
6	1527880	Capscrew	8	..	..	..
7	181899	Clamp	2	..	..	..
8	4680481	Tube	1	..	..	..
9	4683663	Hose - CAC, Hot Side, DPF	1	..	..	..
9	4680475	Hose - CAC, Hot Side, DOC	1	..	..	..
10	4676577	Radiator Hose - upper	1	1	..	1
10	4677377	Radiator Hose - upper	..	..	1	..
11	4308925	Clamp	2	2	2	2
12	4681924	Hose - CAC, Cold Side	1	..	..	..
13	4018397	Hose Clamp	1	..	..	..
14	4682178	Tube	1	..	..	..
14	14594	Plug	1	..	..	..
15	4682485	Radiator Hose - lower	1	..	..	1
15	4676576	Radiator Hose - lower	..	1	..	..
15	4677378	Radiator Hose - lower	..	..	1	..
15	4694621	Radiator Hose - lower (w/ A/C)	..	..	1	..
16	4252081	Bracket - CAC Tube - LH Side	1	..	..	..
17	4680750	Hose - CAC, Cold Side	1	..	..	..
18	1515831	Temperature Sender (Charge Air Cooler)	1	..	..	..
19	4700167	Fan	1	1	1	1
20	296418	Washer	4	4	4	4
21	293613	Capscrew	4	4	..	4
21	293619	Capscrew	..	..	4	..
21	293621	Capscrew (w/ A/C)	..	..	4	..
22	4250540	Shroud (w/ or w/o screen) (☞Figure 8-3)	1	..	..	..
22	4265244	Shroud (w/o screen)	1	..	..	1
22	4265071	Shroud (Hyd Fan)	..	1	..	..
22	4249683	Shroud (w/ or w/o screen) (☞Figure 8-3)	..	1	..	..
22	4250559	Shroud (w/ or w/o screen) (☞Figure 8-3)	..	..	1	..
23	~~4109993~~					
	1527879	Capscrew	2	2	2	2
24	1531404	Sensor (Low Coolant Level)	1	1	1	1
24	14385	Fitting (Optional)	1	1	1	1
25	4671402	Radiator - Two Row	1	1	1	..
25	4108661	Drain Plug (Includes O-Ring)	1	1	1	..
25	4279466	Nut	3	3	3	..
25	4279467	Radiator Cap	1	1	1	..
25	**c** 4674394	Radiator - Three Row, Conventional	1	1	1	..

COOLING SYSTEM

KEY:
A: 2.1L and 2.2L w/ DPF or DOC and CAC
B: 2.1L and 2.2L w/o CAC
C: 3.0L and 3.3L w/o CAC
D: 2.1L and 2.2L w/ HST

ITEM	PART NO.	DESCRIPTION	QTY A	QTY B	QTY C	QTY D
25	**c** 4108661	Drain Plug (Includes O-Ring)	1	1	1	..
25	**c** 4279466	Nut	3	3	3	..
25	**c** 4279467	Radiator Cap	1	1	1	..
25	**d** 4728039	Radiator - Three Row, Conventional	1	1	1	..
25	81004286	Radiator - Three Row, Conventional (Alternate Part)	1	1	1	..
25	4279466	Nut	4	4	4	..
25	4108661	Drain Plug (Includes O-Ring)	1	1	1	..
25	4279467	Radiator Cap	1	1	1	..
25	**b** ~~4674395~~					
	4710015	Radiator (3 Row with CAC)	1	..	..	..
25	**a** 4728040	Radiator (3 Row with CAC) (Alternate Part)	1	..	..	..
25	81004287	Radiator (3 Row with CAC) (Alternate Part)	1	..	..	..
25	4687550	Radiator	..	..	..	1
25	81004285	Radiator (Assembly, HST) (Alternate Part)	..	..	..	1
26	4289267	Screen (☞Figure 8-3)	1	1	1	..
27	1345939	Label (Fan Warning)	2	2	2	2
27	1300094	Label (Fan Warning) (Alternate Part)	2	2	2	2
28	1595440	Spacer (Fan Spacer)	..	..	1	..
29	4267153	Pulley (w/ A/C)	..	..	1	..
30	4308924	Clamp	1	1	..	1
30	4308991	Clamp	..	..	1	..
31	4308925	Clamp	1	1	..	1
31	4308991	Clamp	..	..	1	..
32	4252525	Channel (Screen Mounting)	2	2	2	..
33	4334851	Baffle	1	1	1	..
34	166818	Rivet	10	10	10	..

FOOTNOTES:

a Advanced Transmission
b Basic Transmission
c → 11/2022
d 11/2022 →

©2026 HYSTER COMPANY

RADIATOR SHROUD (FIGURE 8-3)

AND ASSOCIATED PARTS — WITHOUT CAC AND WITHOUT HYD FAN DRIVE (5/2025 →)

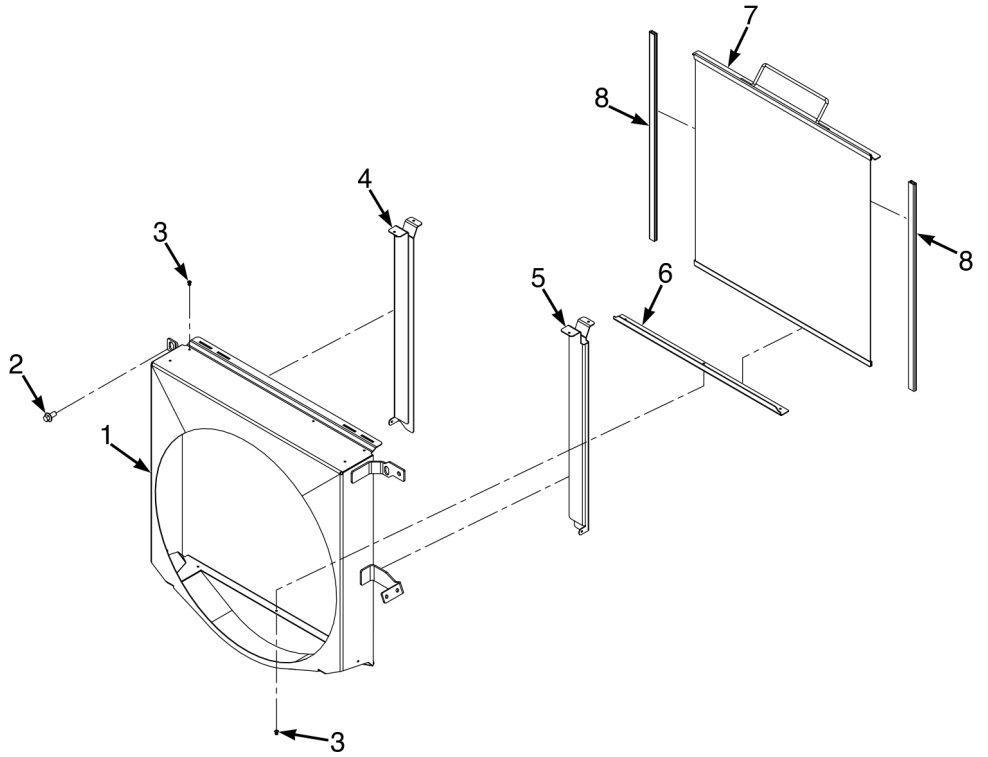

ITEM	PART NO.	DESCRIPTION	QTY
1	4249683	Shroud 2.1L and 2.2L w/o CAC	1
1	4250540	Shroud 2.1L and 2.2L w/ DPF or DOC and CAC	1
1	4250559	Shroud 3.0L and 3.3L w/o CAC	1
2	~~4109993~~		
	1527879	Capscrew	2
3	166818	Rivet	9
4	81024487	Channel (Shroud Screen Right) 2.1L and 2.2L w/o CAC	1
4	81024489	Channel (Shroud Screen Right) 2.1L and 2.2L w/ DPF or DOC and CAC	1
4	81025411	Channel (Shroud Screen Right) 3.0L and 3.3L w/o CAC	1
5	81024486	Channel (Shroud Screen Left) 2.1L and 2.2L w/o CAC	1
5	81024488	Channel (Shroud Screen Left) 2.1L and 2.2L w/ DPF or DOC and CAC	1
5	81025410	Channel (Shroud Screen Left) 3.0L and 3.3L w/o CAC	1
6	81024982	Baffle (Radiator Schroud)	1
7	4289267	Screen	1
8	~~4700312~~		
	81024491	Trim (Debris Screen)	2

HYDRAULIC FAN DRIVE (FIGURE 8-4)

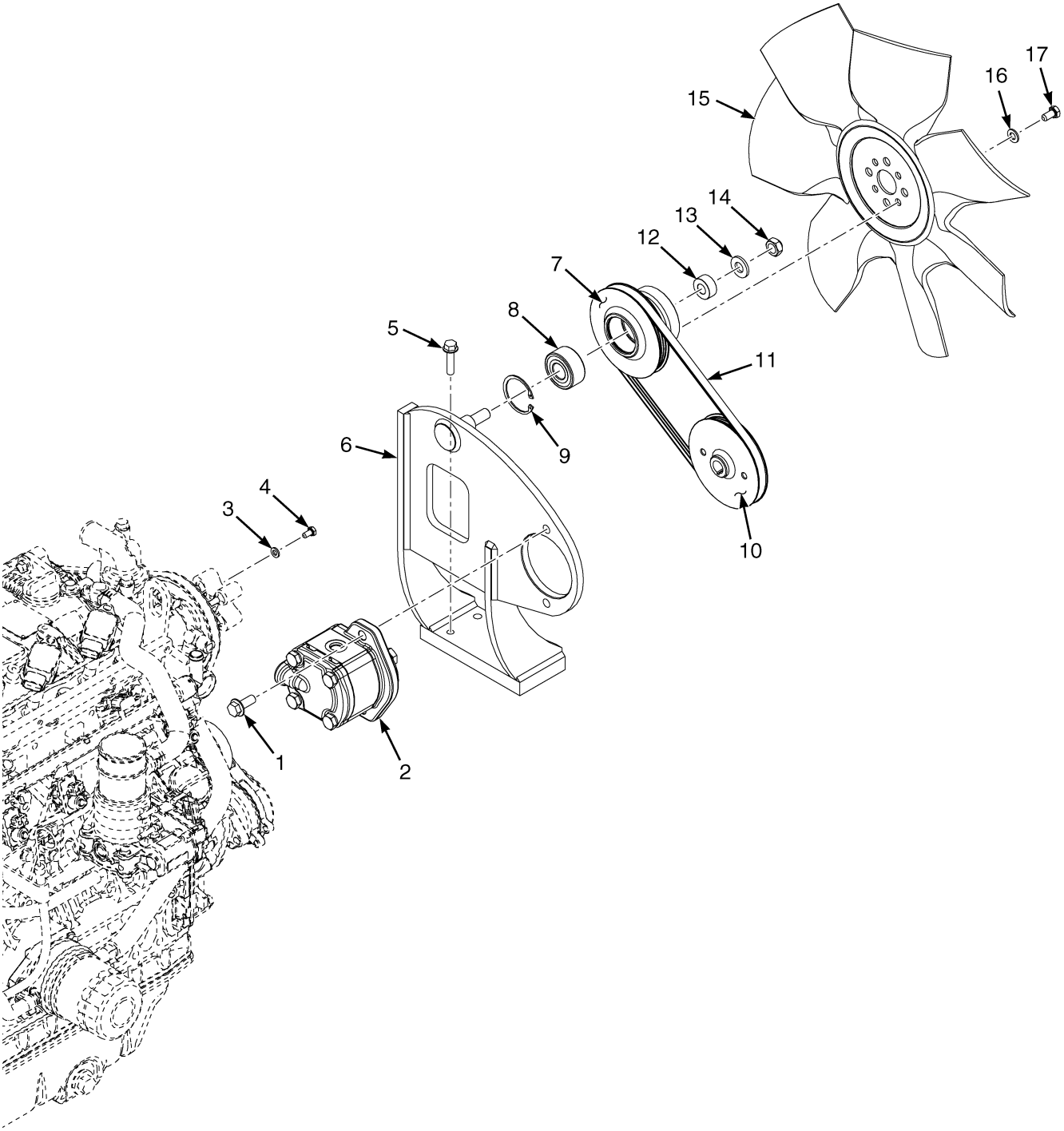

©2026 HYSTER COMPANY

HYDRAULIC FAN DRIVE

ITEM	PART NO.	DESCRIPTION	QTY
1	1510117	Capscrew	2
2	4678111	Hydraulic Motor - Fan Drive	1
3	296417	Washer	4
4	176704	Capscrew	4
5	1528482	Capscrew	4
6	4684954	Fan Mount	1
7	4693306	Hub (Assembly)	1
7	4682891	Hub	1
8	1459011	Ball Bearing	1
9	12928	Snap Ring	1
10	4682890	Sheave - Hyd Fan Motor	1
11	4685986	Belt	1
12	4084803	Spacer	1
13	221771	Washer	1
14	221355	Locknut	1
15	4700168	Fan	1
16	296418	Washer	4
17	293612	Capscrew	4

©2026 HYSTER COMPANY

RADIATOR (FIGURE 8-5)
3-ROW WITH CAC

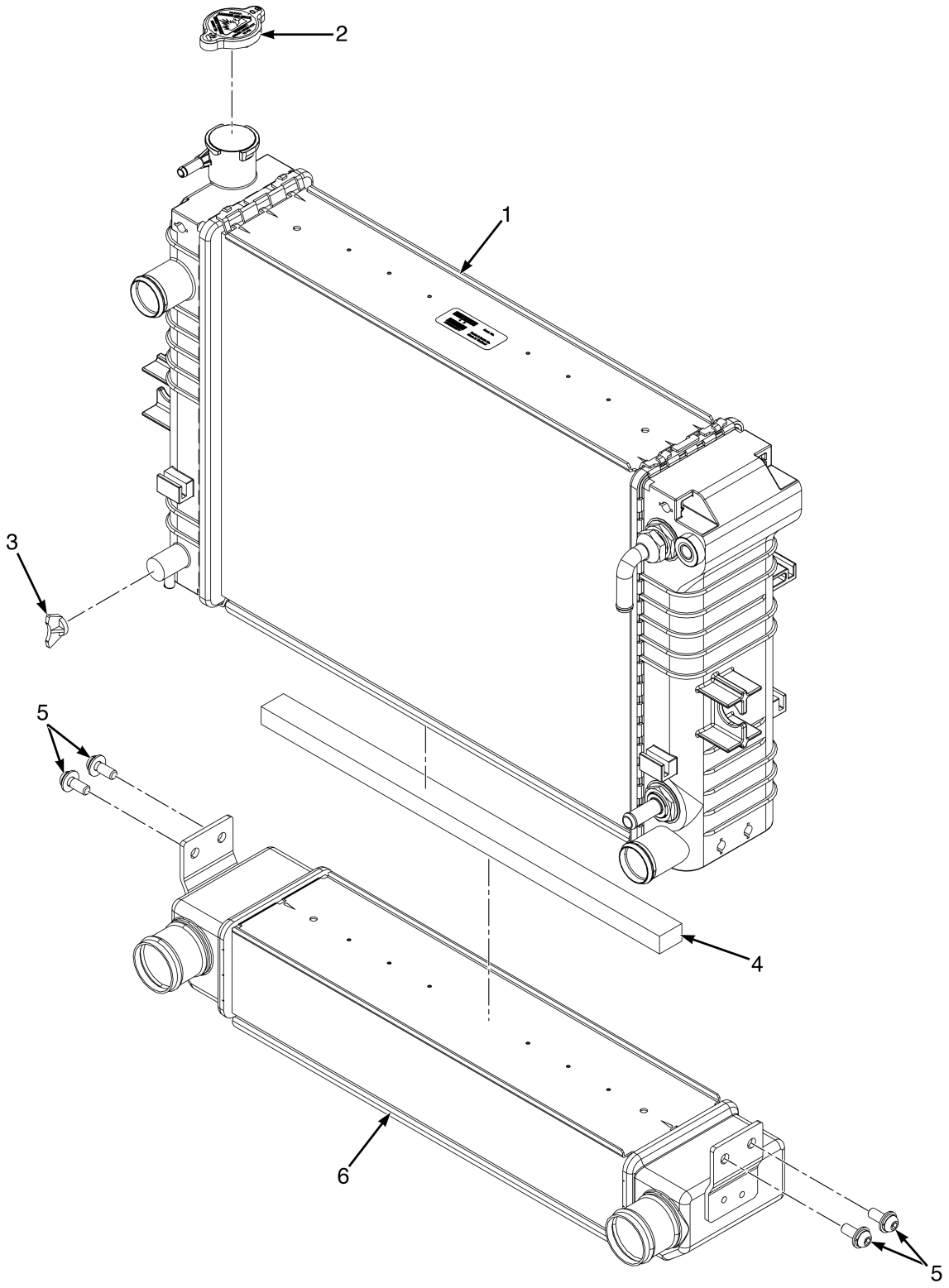

BP060268

©2026 HYSTER COMPANY

ITEM	PART NO.	DESCRIPTION	QTY
	~~4674395~~		
	4710015	Radiator (3 Row with CAC)	1
1	4279468	Radiator	1
1	4279466	Nut	8
2	4279467	Radiator Cap	1
3	4108661	Drain Plug (Includes O-Ring)	1
4	4279470	Seal	1
5	4038266	Bolt (With Washer)	4
6	4318090	Air Cooler	1

©2026 HYSTER COMPANY

RADIATOR (FIGURE 8-6)
3-ROW WITH CAC — ALTERNATE

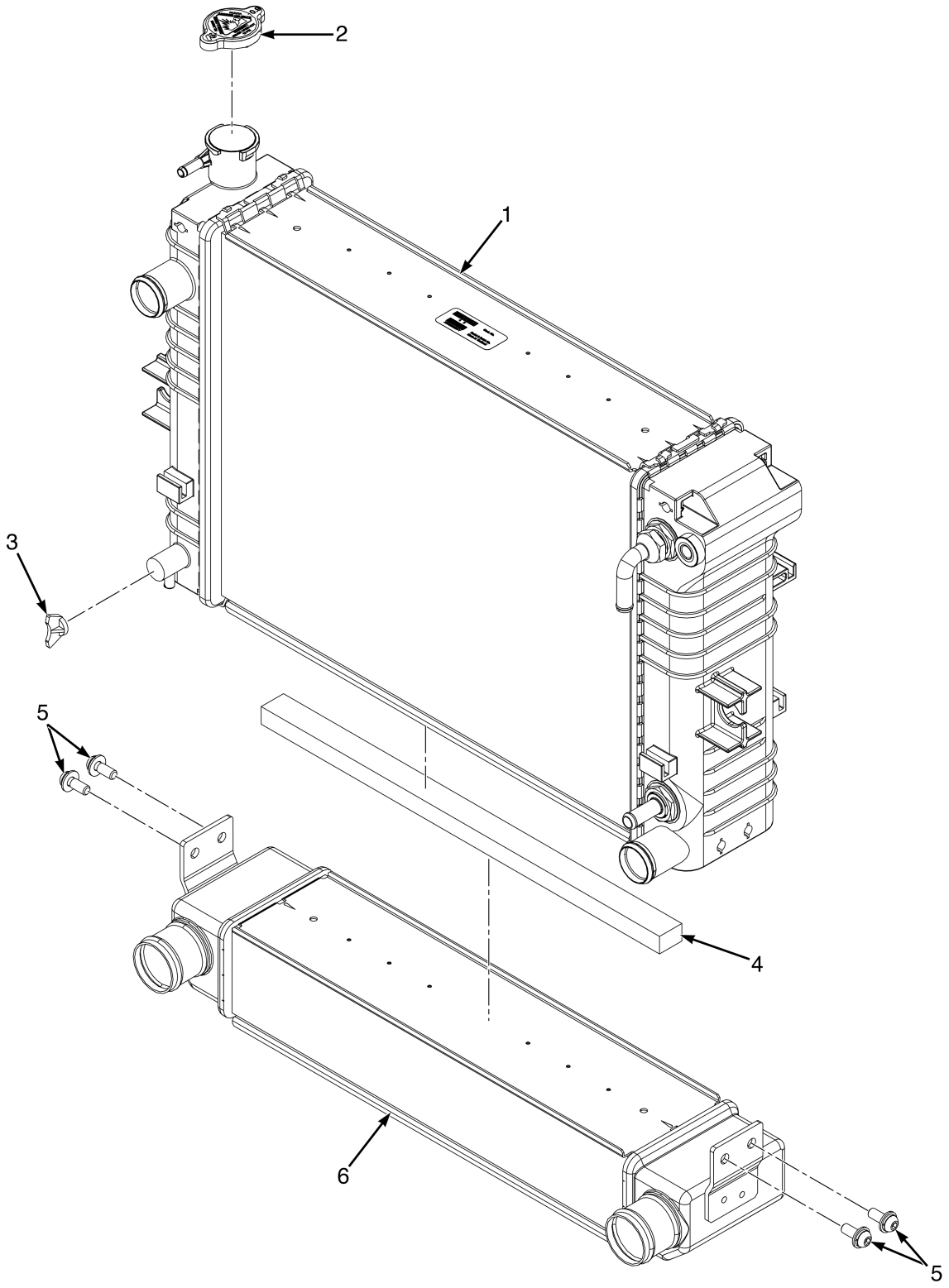

BP060268

©2026 HYSTER COMPANY

KEY:
A: Without HST
B: With HST

ITEM	PART NO.	DESCRIPTION	QTY A	QTY B
	81004287	Radiator (3 Row with CAC)	1	..
	81004285	Radiator (Assembly, HST)	..	1
1	81029189	Radiator	1	..
1	81029190	Radiator	..	1
1	. . . . .	Nut	8	8
2	. . . . .	Cap	1	1
3	. . . . .	Drain Plug	1	1
4	. . . . .	Seal	1	1
5	4038266	Bolt (With Washer)	4	4
6	4318090	Air Cooler	1	..
6	81029191	Air Cooler	..	1

©2026 HYSTER COMPANY

FAST FAN (FIGURE 8-7)
2.2L LPG/BI-FUEL

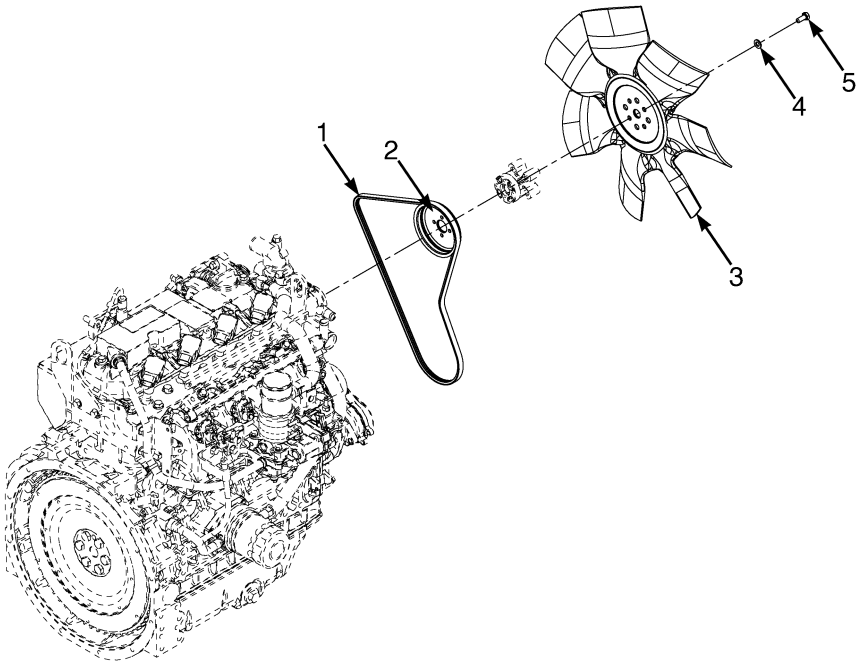

BP060296

ITEM	PART NO.	DESCRIPTION	QTY
1	4388573	Belt (1.14 Ratio)	1
2	4388574	Water Pump Pulley (1.14 Ratio)	1
3	4700167	Fan	1
4	296418	Washer	4
5	293613	Capscrew	4

©2026 HYSTER COMPANY

9 FUEL SYSTEM - LPG/BI FUEL

SECTION 9
FUEL SYSTEM - LPG/BI FUEL

DESCRIPTION **PAGE**

FUEL SYSTEM
BI-FUEL 9-2
LPG - WITH FUEL QUALITY SENSOR 9-4
LPG BRACKET ASSEMBLY
DROP DOWN - STEEL STRAP 9-6
SWING OUT - FABRIC STRAP 9-10
SWING OUT - STEEL STRAP 9-14
SWING OUT DROP DOWN - TWIN STEEL STRAPS (MFG OPTION) 9-20
LPG TANK BRACKET ASSEMBLY
FIXED - STEEL STRAP 9-17

©2026 HYSTER COMPANY

FUEL SYSTEM (FIGURE 9-1)
BI-FUEL

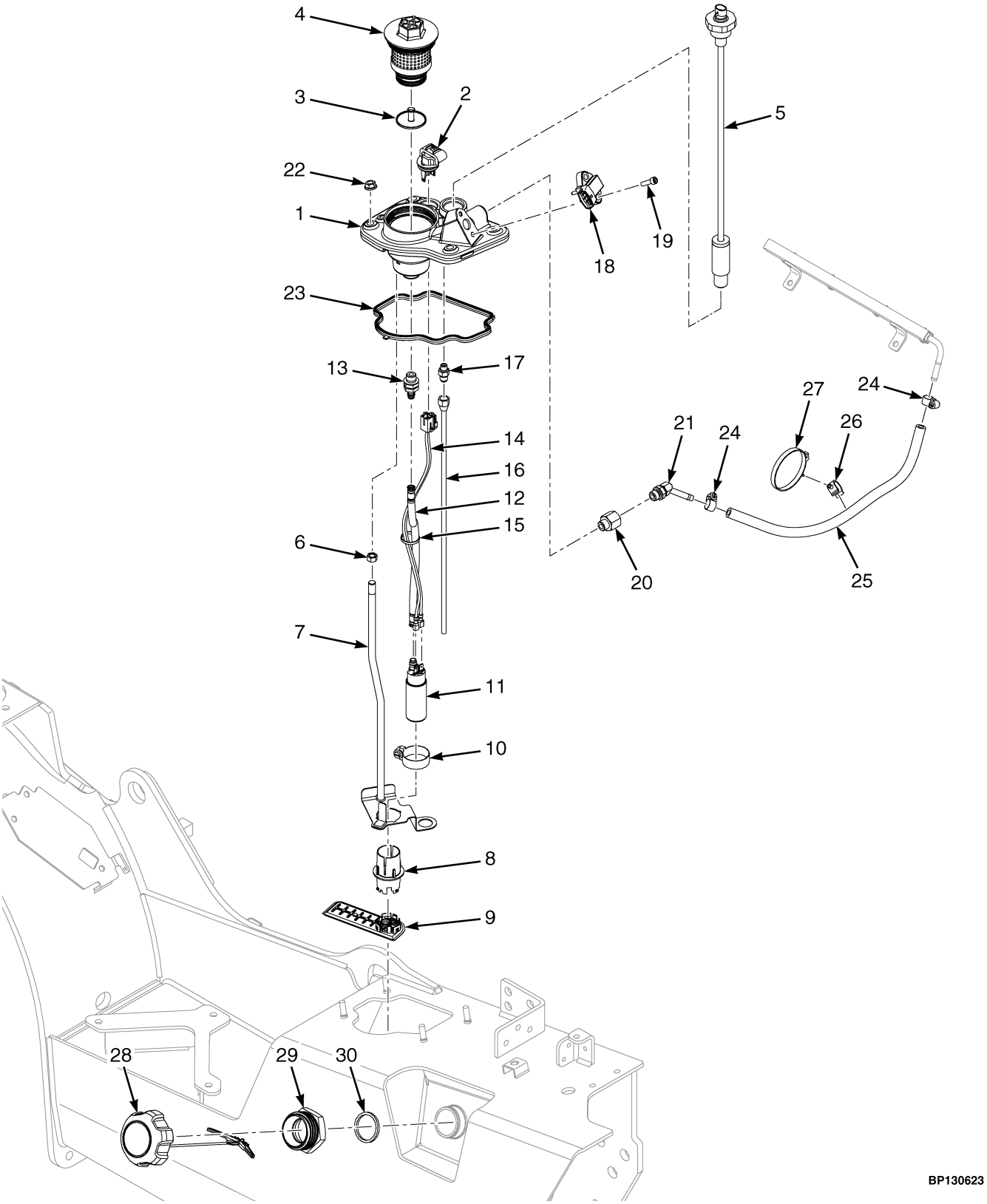

©2026 HYSTER COMPANY

FUEL SYSTEM
BI-FUEL

ITEM	PART NO.	DESCRIPTION	QTY
	4259973	Fuel Sender	1
1	4713692	Manifold - Fuel Sender	1
2	4268458	Connector	1
3	4258856	Shield , Debris	1
4	4697700	Fuel Filter	1
5	4272046	Fuel Sender	1
6	2022719	Nut	1
7	4254199	Mounting Weldment	1
8	4259904	Isolator	1
9	4259903	Strainer	1
10	2306118	Clamp	1
11	**c** 4259902	Fuel Pump	1
12	**c** 4698360	Tube - Gasoline	1
13	**c** ~~4272641~~		
	4322829	Fitting	1
14	4684916	Wire Harness (☞Figure 11-111)	1
15	114312	Strap Clamp	1
16	4712610	Tube - RCV Return Line	1
17	4316680	Fitting - w/ Screened Reverse RCV	1
18	4259982	Sensor , Sensor	1
19	1581842	Capscrew	2
20	4026085	Fitting	1
20	16483	O-Ring	1
21	4691369	Fitting	1
22	~~1382472~~		
	1502543	Nut	4
23	4255799	Gasket	1
24	168718	Clamp	2
25	4697318	Hose	1
25	4735570	Hose Assy (MFG Option)	1
26	1606544	Clamp (Swivel)	1
27	1502061	Clamp (Swivel)	1
28	4258945	Fuel Cap	1
28	1579677	Fuel Cap (Lockable Version) (Optional)	1
29	**a** 4247907	Adapter	1
30	**d** 4262347	Gasket	1
	b 1328892	LPG Tank (Aluminum)	1
	b 1328890	LPG Tank (Steel)	1
	4334712	Fuel Pump (Assembly) (Service Option)	1

FOOTNOTES:

a For use with Standard Fuel Cap.
b Not Illustrated
c Not Serviced Seperately after 9/25/2022.
d Primary for Locking Fuel Cap.

FUEL SYSTEM (FIGURE 9-2)
LPG — WITH FUEL QUALITY SENSOR

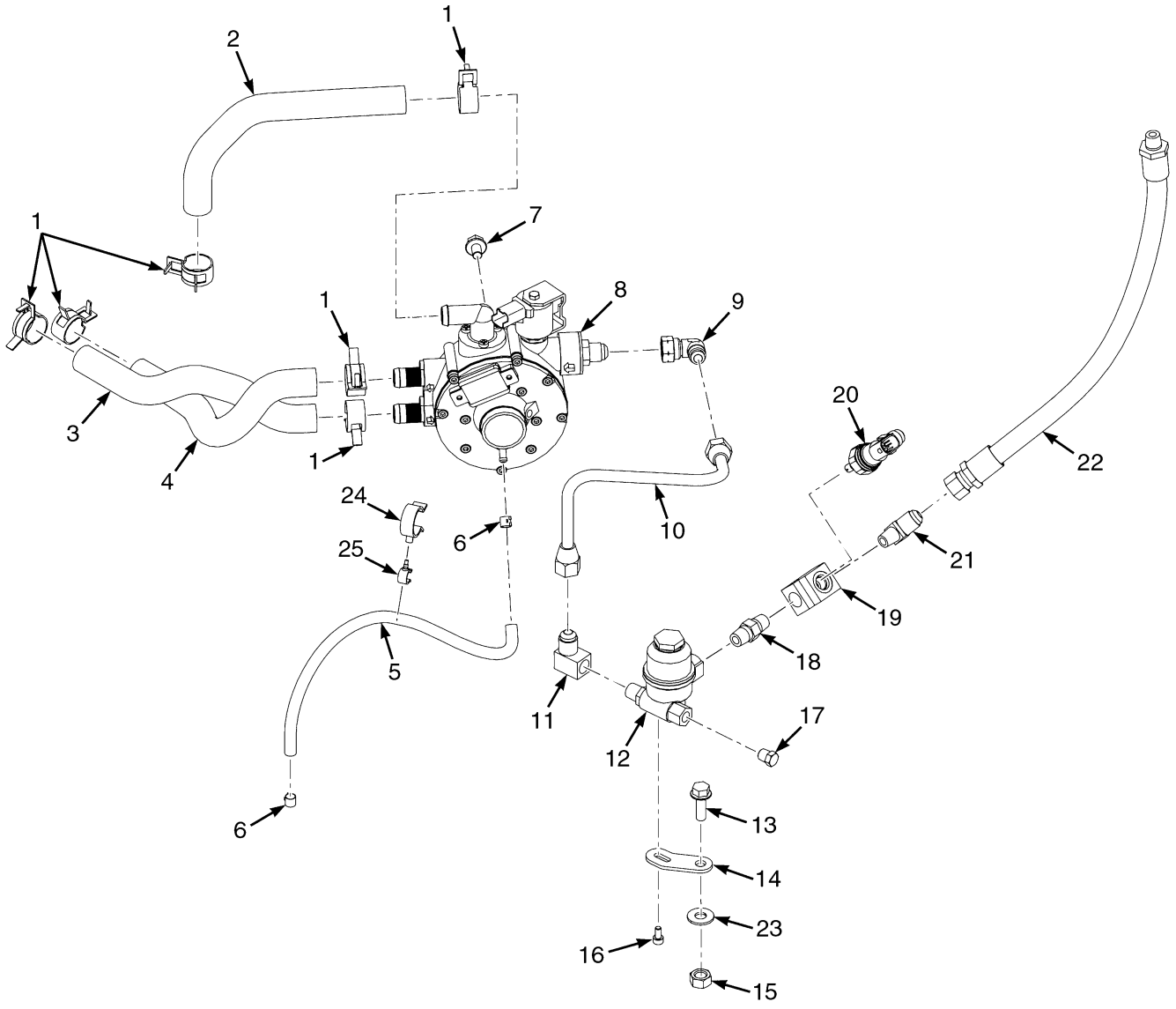

©2026 HYSTER COMPANY

FUEL SYSTEM

LPG – WITH FUEL QUALITY SENSOR

ITEM	PART NO.	DESCRIPTION	QTY
1	1501994	Hose Clamp	6
2	4678900	Hose - Fuel Vapor	1
3	4679065	Hose - Coolant	1
4	4679007	Hose - Coolant	1
5	4708143	Hose	1
6	1333840	Clamp	2
6	4351287	Hose Clamp (Alternate Part)	2
7	1529366	Capscrew	1
8	4250487	LPG Fuel System - Vaporizer	1
8	4323832	Kit-Filter	1
9	4051434	Fitting (Elbow)	1
10	4694129	Tube Assy - Converter Filter	1
10	4734340	Tube Assy - Converter Filter (Alternate Part)	1
11	14372	Fitting	1
12	2105803	Fuel Filter (LPG)	1
12	1689544	Kit-Filter Element	1
13	1510117	Capscrew	1
14	4273544	Spacer - Fuel Filter, LPG	1
15	4253191	Nut	1
16	~~384279~~		
	293741	Capscrew	2
17	14349	Fitting (Pipe Plug)	1
18	16271	Fitting	1
19	~~4265500~~		
	4335016	Valve Block - Fuel Quality Sensor	1
20	4265501	Sensor - Fuel Quality	1
21	16863	Fitting	1
22	4706855	Hose Assy	1
22	4602370	Hose Assy (Alternate Part)	1
23	4258710	Washer	1
24	1542436	Clamp (Swivel)	1
25	1573549	Clamp (Swivel)	1
	a 1328892	LPG Tank (Aluminium)	1
	a 1328890	LPG Tank (Steel)	1

FOOTNOTES:

a Not Illustrated

LPG BRACKET ASSEMBLY (FIGURE 9-3)

DROP DOWN — STEEL STRAP

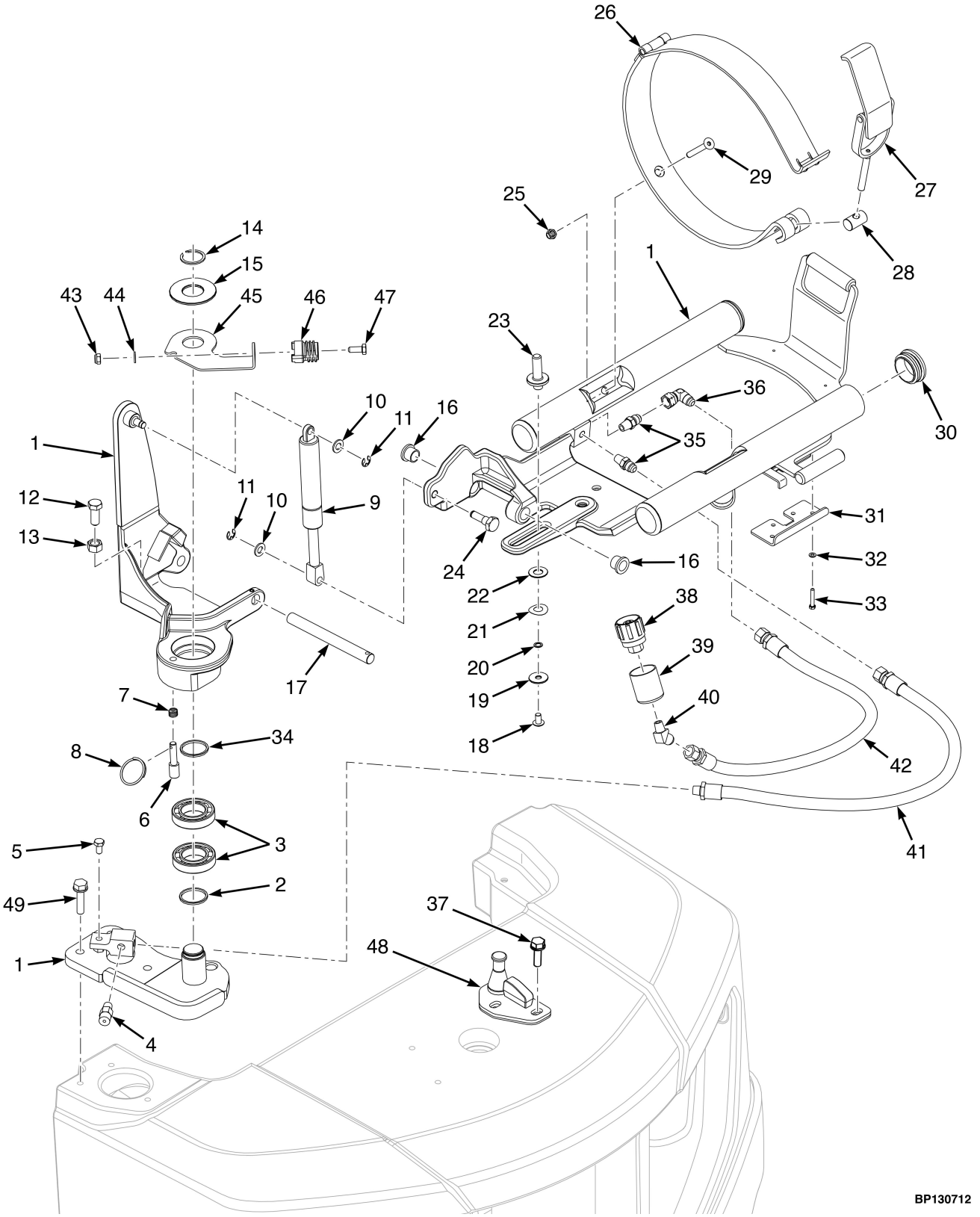

©2026 HYSTER COMPANY

LPG BRACKET ASSEMBLY
DROP DOWN – STEEL STRAP

ITEM	PART NO.	DESCRIPTION	QTY
1	4256904	LPG Tank Bracket	1
1	**a** 4256906	LPG Tank Bracket	1
2	1568853	Thrust Washer	1
3	184451	Ball Bearing	2
4	101809	Relief Valve	1
5	1581579	Capscrew	1
6	1615956	Pin	1
7	1528903	Spring	1
8	1534672	Ring	1
9	1402414	Gas Spring	1
10	1581557	Washer	2
11	1525442	E-Ring	2
12	1586022	Capscrew	1
13	1581848	Nut	1
14	34507	Snap Ring	1
15	**c** 1568839	Washer (Pivot)	1
16	1581888	Bushing	2
17	1581887	Shaft	1
18	4031146	Capscrew	1
19	4032291	Washer	1
20	4032292	Spacer	1
21	4029920	Washer (Curved disc spring)	1
22	4029538	Washer	1
23	~~1684323~~		
	4029506	Pin	1
24	1525478	Pin	1
25	1581739	Nut	2
26	1613749	Strap	1
27	1613755	Latch	1
28	1613763	Nut	1
29	1581733	Capscrew	2
30	1398099	Plug	4
31	4193118	Plate	1
31	4254416	Latch Plate (Alternative Part)	1
32	4043632	Washer	4
33	4054932	Capscrew	4
34	4345069	Washer (Thrust)	1
35	16134	Fitting	2
36	4051434	Fitting (Elbow)	1
37	1586629	Capscrew	2
38	97999	Fitting	1
38	**d** 878758	Fitting	1
39	2071517	Sleeve	1
39	**d** 895603	Fitting	1
40	16863	Fitting	1
41	4702125	Hose Assy	1
41	**a** 4702123	Hose Assy	1
42	4707048	Hose Assy	1
42	**a** 4702124	Hose Assy	1
43	1581739	Nut	1

©2026 HYSTER COMPANY

LPG BRACKET ASSEMBLY

DROP DOWN – STEEL STRAP

ITEM	PART NO.	DESCRIPTION	QTY
44	~~4166624~~		
	1581556	Washer	1
45	4277163	Bracket	1
45	4323992	Bracket (Alternative Part)	1
45	. . . . .	Interlock Option (☞Figure 22-28, ☞Figure 22-29)	1
46	4139859	Plug	1
47	1581580	Capscrew	1
48	4254414	Striker	1
49	1581400	Capscrew	3
	b 1354172	Label (Flammable LPG) (Tank Mounting Bracket)	1

FOOTNOTES:

a Manufacturing Option
b Not Illustrated
c Not used if item 45 hose stowage plug bracket installed.
d Union Nut Fitting Option.

©2026 HYSTER COMPANY

NOTES

LPG BRACKET ASSEMBLY (FIGURE 9-4)

SWING OUT — FABRIC STRAP

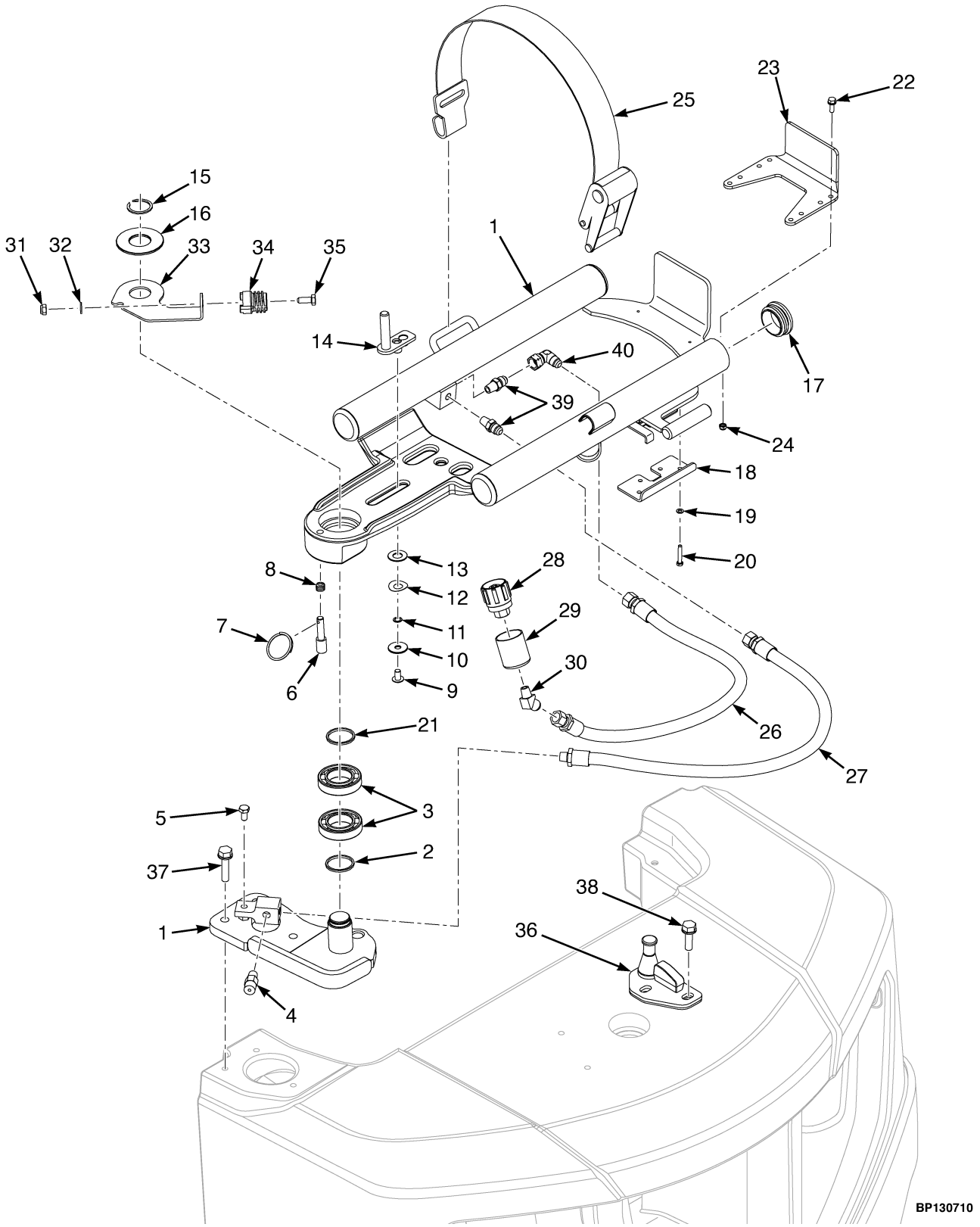

©2026 HYSTER COMPANY

LPG BRACKET ASSEMBLY
SWING OUT – FABRIC STRAP

ITEM	PART NO.	DESCRIPTION	QTY
1	**d** 4256895	LPG Tank Bracket	1
1	**e** 4326271	LPG Tank Bracket	1
1	**f** 4338307	LPG Tank Bracket	1
2	1568853	Thrust Washer	1
3	184451	Ball Bearing	2
4	101809	Relief Valve	1
5	1581579	Capscrew	1
6	1615956	Pin	1
7	1534672	Ring	1
8	1528903	Spring	1
9	4031146	Capscrew	1
10	4032291	Washer	1
11	4032292	Spacer	1
12	4029920	Washer (Curved disc spring)	1
13	4029538	Washer	2
14	~~1651119~~		
	4032607	Pin	1
15	34507	Snap Ring	1
16	**b** 1568839	Washer (Pivot)	1
17	1398099	Plug	4
18	4193118	Plate	1
18	4254416	Latch Plate (Alternative Part)	1
19	4043632	Washer	4
20	4054932	Capscrew	4
21	4345069	Washer (Thrust)	1
22	**f** 1583611	Capscrew	4
23	**f** 1689551	Plate	1
24	**f** 1581739	Nut	4
25	1379455	Strap (Retension)	1
26	4707048	Hose Assy	1
27	4702125	Hose Assy	1
28	97999	Fitting	1
28	**c** 878758	Fitting	1
29	2071517	Sleeve	1
29	**c** 895603	Fitting	1
30	16863	Fitting	1
31	1581739	Nut	1
32	~~4166624~~		
	1581556	Washer	1
33	4277163	Bracket	1
33	4323992	Bracket (Alternative Part)	1
33	. . . . .	Interlock Option (☞Figure 22-28, ☞Figure 22-29)	1
34	4139859	Plug	1
35	1581580	Capscrew	1
36	4254414	Striker	1
37	1581400	Capscrew	3
38	1586629	Capscrew	2
39	16134	Fitting	2
40	4051434	Fitting (Elbow)	1

LPG BRACKET ASSEMBLY
SWING OUT – FABRIC STRAP

ITEM	PART NO.	DESCRIPTION	QTY
	a 1354172	Label (Flammable LPG) (Tank Mounting Bracket)	1

FOOTNOTES:

a Not Illustrated
b Not used if item 33 hose stowage plug bracket installed.
c Union Nut Fitting Option.
d → 6/2021
e 6/2021 ↔ 8/2023
f 8/2023 →

©2026 HYSTER COMPANY

NOTES

LPG BRACKET ASSEMBLY (FIGURE 9-5)

SWING OUT — STEEL STRAP

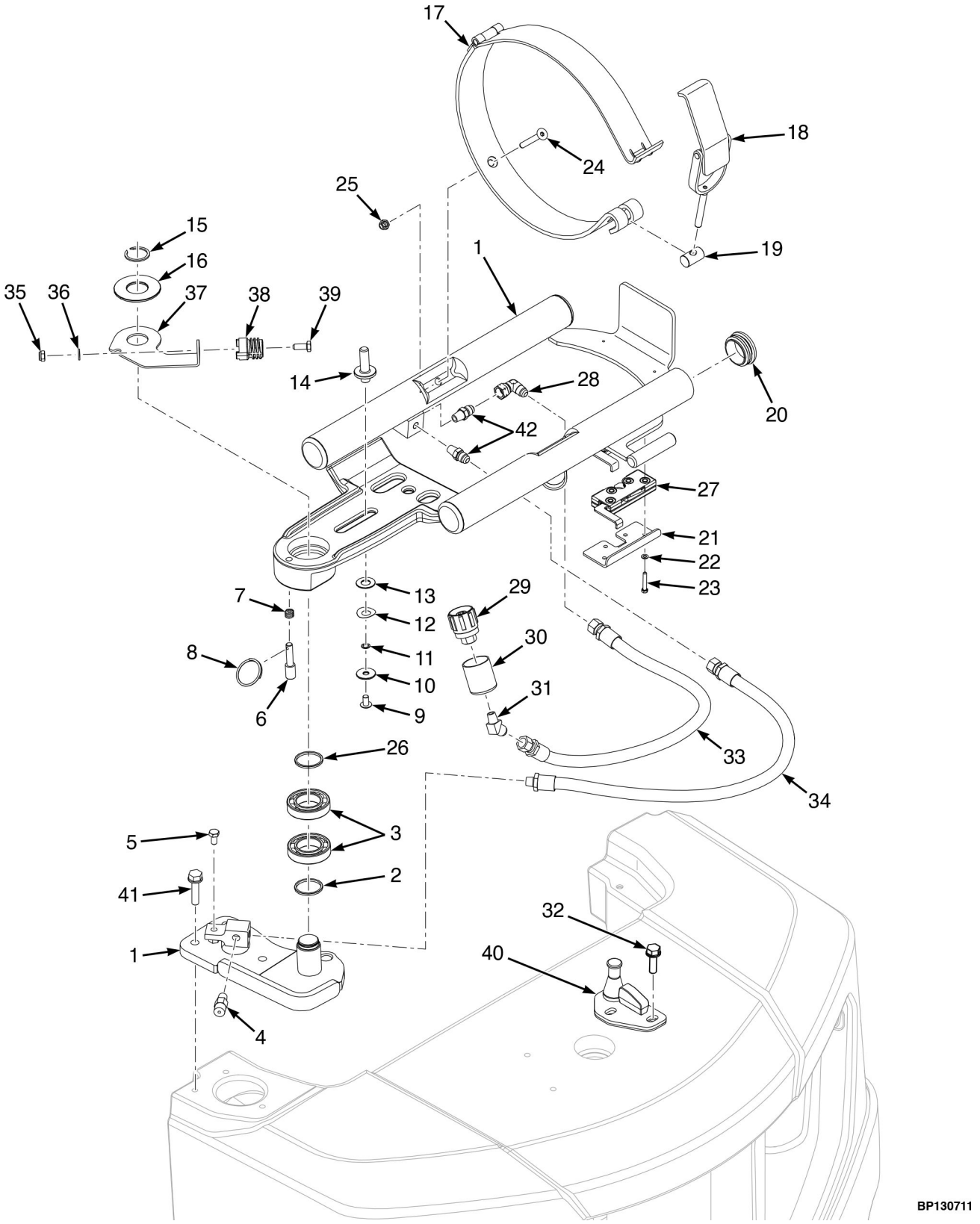

©2026 HYSTER COMPANY

LPG BRACKET ASSEMBLY
SWING OUT – STEEL STRAP

ITEM	PART NO.	DESCRIPTION	QTY
1	4256894	LPG Tank Bracket	1
2	1568853	Thrust Washer	1
3	184451	Ball Bearing	2
4	101809	Relief Valve	1
5	1581579	Capscrew	1
6	1615956	Pin	1
7	1528903	Spring	1
8	1534672	Ring	1
9	4031146	Capscrew	1
10	4032291	Washer	1
11	4032292	Spacer	1
12	4029920	Washer (Curved disc spring)	1
13	4029538	Washer	1
14	~~1684323~~		
	4029506	Pin	1
15	34507	Snap Ring	1
16	**b** 1568839	Washer (Pivot)	1
17	1613749	Strap	1
18	1613755	Latch	1
19	1613763	Nut	1
20	1398099	Plug	4
21	4193118	Plate	1
21	4254416	Latch Plate (Alternative Part)	1
22	4043632	Washer	4
23	4054932	Capscrew	4
24	1581733	Capscrew	2
25	1581739	Nut	2
26	4345069	Washer (Thrust)	1
27	4269726	Latch	1
28	4051434	Fitting (Elbow)	1
29	97999	Fitting	1
29	**c** 878758	Fitting	1
30	2071517	Sleeve	1
30	**c** 895603	Fitting	1
31	16863	Fitting	1
32	1586629	Capscrew	2
33	4707048	Hose Assy	1
34	4702125	Hose Assy	1
35	1581739	Nut	1
36	~~4166624~~		
	1581556	Washer	1
37	4277163	Bracket	1
37	4323992	Bracket (Alternative Part)	1
37	. . . . .	Interlock Option (☞Figure 22-28, ☞Figure 22-29)	1
38	4139859	Plug	1
39	1581580	Capscrew	1
40	4254414	Striker	1
41	1581400	Capscrew	3
42	16134	Fitting	2

LPG BRACKET ASSEMBLY

SWING OUT – STEEL STRAP

ITEM	PART NO.	DESCRIPTION	QTY
	a 1354172	Label (Flammable LPG) (Tank Mounting Bracket)	1

FOOTNOTES:

a Not Illustrated
b Not used if item 37 hose stowage plug bracket installed.
c Union Nut Fitting Option.

©2026 HYSTER COMPANY

LPG TANK BRACKET ASSEMBLY (FIGURE 9-6)

FIXED — STEEL STRAP

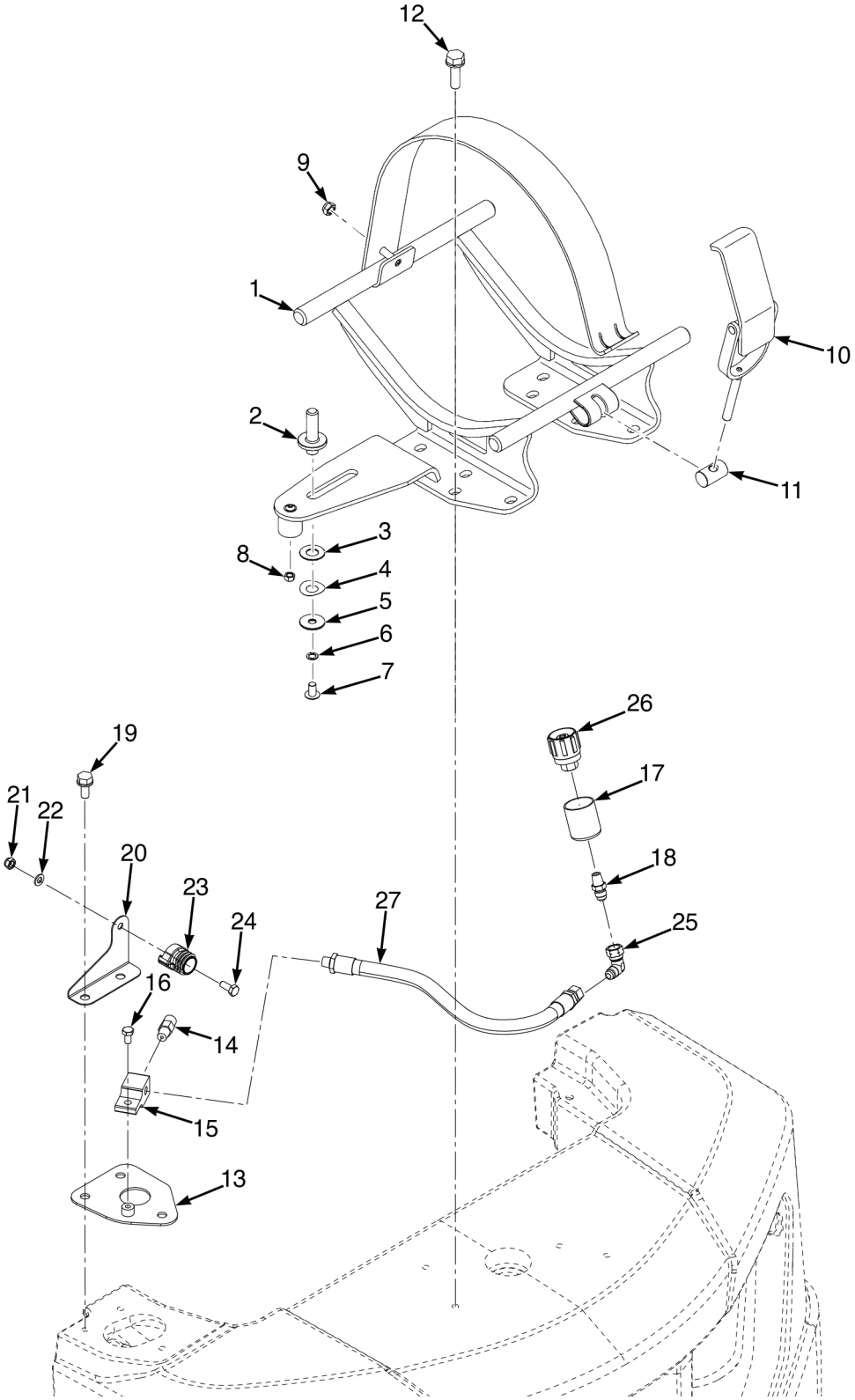

ITEM	PART NO.	DESCRIPTION	QTY
1	4256907	LPG Tank Bracket - Fixed, Steel Strap	1
2	~~1684323~~		
	4029506	Pin	1
2	4377077	Pin (Alternate Part)	1
3	4029538	Washer	1
4	4029920	Washer (Curved disc spring)	1
5	4032291	Washer	1
6	4032292	Spacer	1
7	4031146	Capscrew	1
8	302399	Nut	1
9	1581739	Nut	1
10	1613755	Latch	1
11	1613763	Nut	1
12	1586629	Capscrew	4
13	4258113	Pivot (Plate)	1
14	101809	Relief Valve	1
15	1581579	Capscrew	1
16	4254432	Fitting	1
17	2071517	Sleeve	1
17	**b** 895603	Fitting	1
18	**c** 16863	Fitting	1
18	**d** 16134	Fitting	1
19	1586013	Capscrew	3
20	4277164	Bracket	1
21	1581739	Nut	1
22	~~4166624~~		
	1581556	Washer	1
23	4139859	Plug	1
24	1581580	Capscrew	1
25	**d** 4051434	Fitting (Elbow)	1
26	97999	Fitting	1
26	**b** 878758	Fitting	1
27	**c** 4694553	Hose Assy	1
27	**d** 4717200	Hose Assy	1
	a 1354172	Label (Flammable LPG) (Tank Mounting Bracket)	1

FOOTNOTES:

a Not Illustrated
b Union Nut Fitting Option.
c → 10/2021
d 10/2021 →

©2026 HYSTER COMPANY

NOTES

LPG BRACKET ASSEMBLY (FIGURE 9-7)

SWING OUT DROP DOWN — TWIN STEEL STRAPS (MFG OPTION)

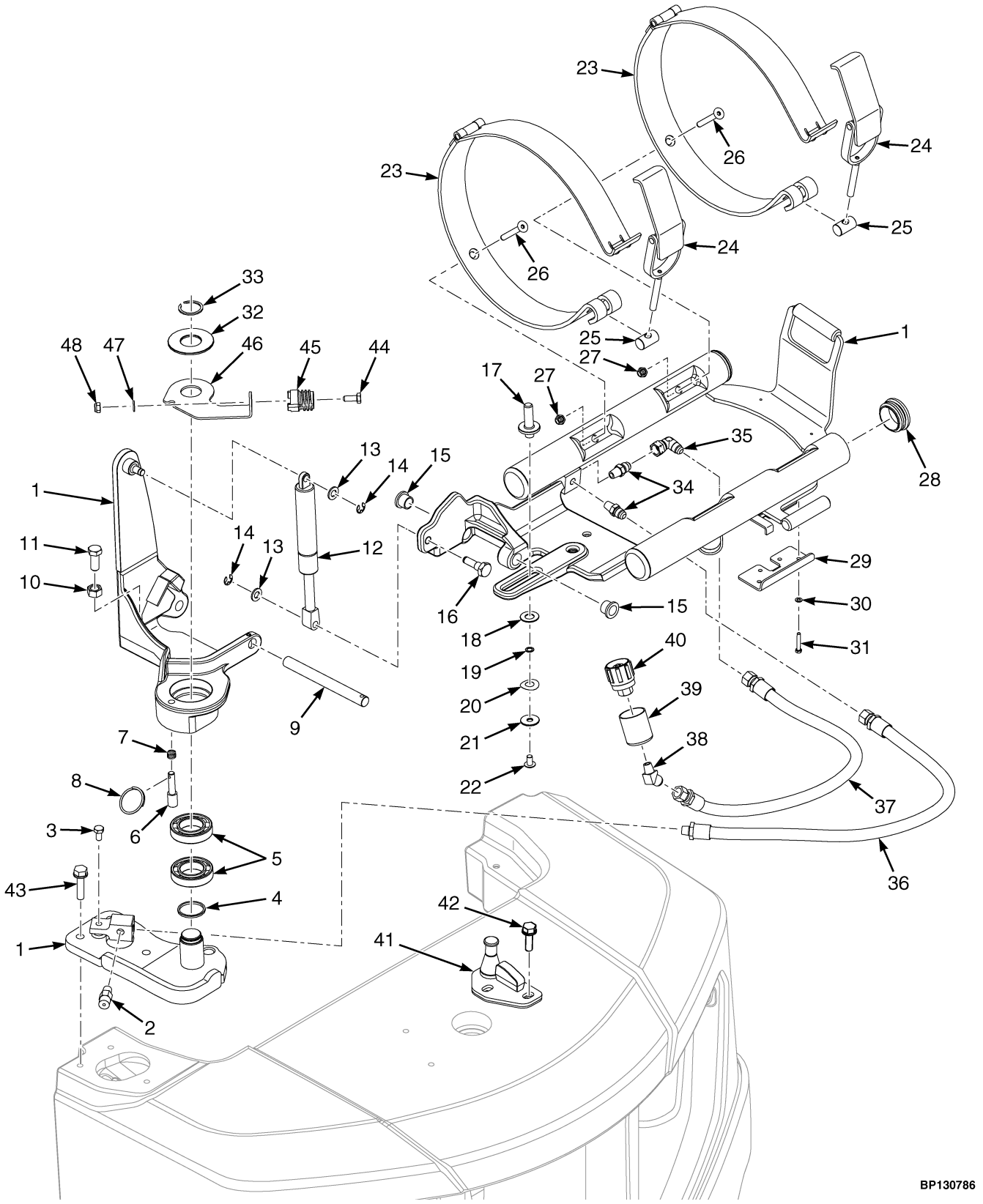

©2026 HYSTER COMPANY

LPG BRACKET ASSEMBLY

SWING OUT DROP DOWN – TWIN STEEL STRAPS (MFG OPTION)

ITEM	PART NO.	DESCRIPTION	QTY
1	4256906	LPG Tank Bracket	1
2	101809	Relief Valve	1
3	1581579	Capscrew	1
4	1568853	Thrust Washer	1
5	184451	Ball Bearing	2
6	1615956	Pin	1
7	1528903	Spring	1
8	1534672	Ring	1
9	1581887	Shaft	1
10	1581848	Nut	1
11	1586022	Capscrew	1
12	1402414	Gas Spring	1
13	1581557	Washer	2
14	1525442	E-Ring	2
15	1581888	Bushing	2
16	1525478	Pin	1
17	~~1684323~~		
	4029506	Pin	1
18	4029538	Washer	1
19	4032292	Spacer	1
20	4029920	Washer (Curved disc spring)	1
21	4032291	Washer	1
22	4031146	Capscrew	1
23	1613749	Strap	2
24	1613755	Latch	2
25	1613763	Nut	1
26	1581733	Capscrew	4
27	1581739	Nut	4
28	1398099	Plug	4
29	4193118	Plate	1
29	4254416	Latch Plate (Alternative Part)	1
30	4043632	Washer	4
31	4054932	Capscrew	4
32	**b** 1568839	Washer (Pivot)	1
33	34507	Snap Ring	1
34	16134	Fitting	2
35	4051434	Fitting (Elbow)	1
36	4702126	Hose Assy	1
37	4708086	Hose Assy	1
38	16863	Fitting	1
39	2071517	Sleeve	1
39	**c** 895603	Fitting	1
40	97999	Fitting	1
40	**c** 878758	Fitting	1
41	4254414	Striker	1
42	1586629	Capscrew	2
43	1581400	Capscrew	3
44	1581580	Capscrew	1
45	4139859	Plug	1
46	4323992	Bracket	1

©2026 HYSTER COMPANY

LPG BRACKET ASSEMBLY

SWING OUT DROP DOWN – TWIN STEEL STRAPS (MFG OPTION)

ITEM	PART NO.	DESCRIPTION	QTY
46	. . . . .	Interlock Option (☞Figure 22-28, ☞Figure 22-29).....	1
47	~~4166624~~		
	1581556	Washer	1
48	1581739	Nut	1
	a 1354172	Label (Flammable LPG) (Tank Mounting Bracket)	1

FOOTNOTES:

a Not Illustrated

b Not used if item 46 hose stowage plug bracket installed.

c Union Nut Fitting Option

©2026 HYSTER COMPANY

10 FUEL SYSTEM-DIESEL

SECTION 10
FUEL SYSTEM-DIESEL

DESCRIPTION **PAGE**

E-THROTTLE ACTUATOR 10-12
FUEL SENDER ASSEMBLY
2.1L 10-6
3.0L AND 3.3L 10-10
FUEL SYSTEM
2.1L (→ 9/2021) 10-2
2.1L (9/2021 →) 10-4
3.0L AND 3.3L 10-8

©2026 HYSTER COMPANY

FUEL SYSTEM (FIGURE 10-1)

2.1L (→ 9/2021)

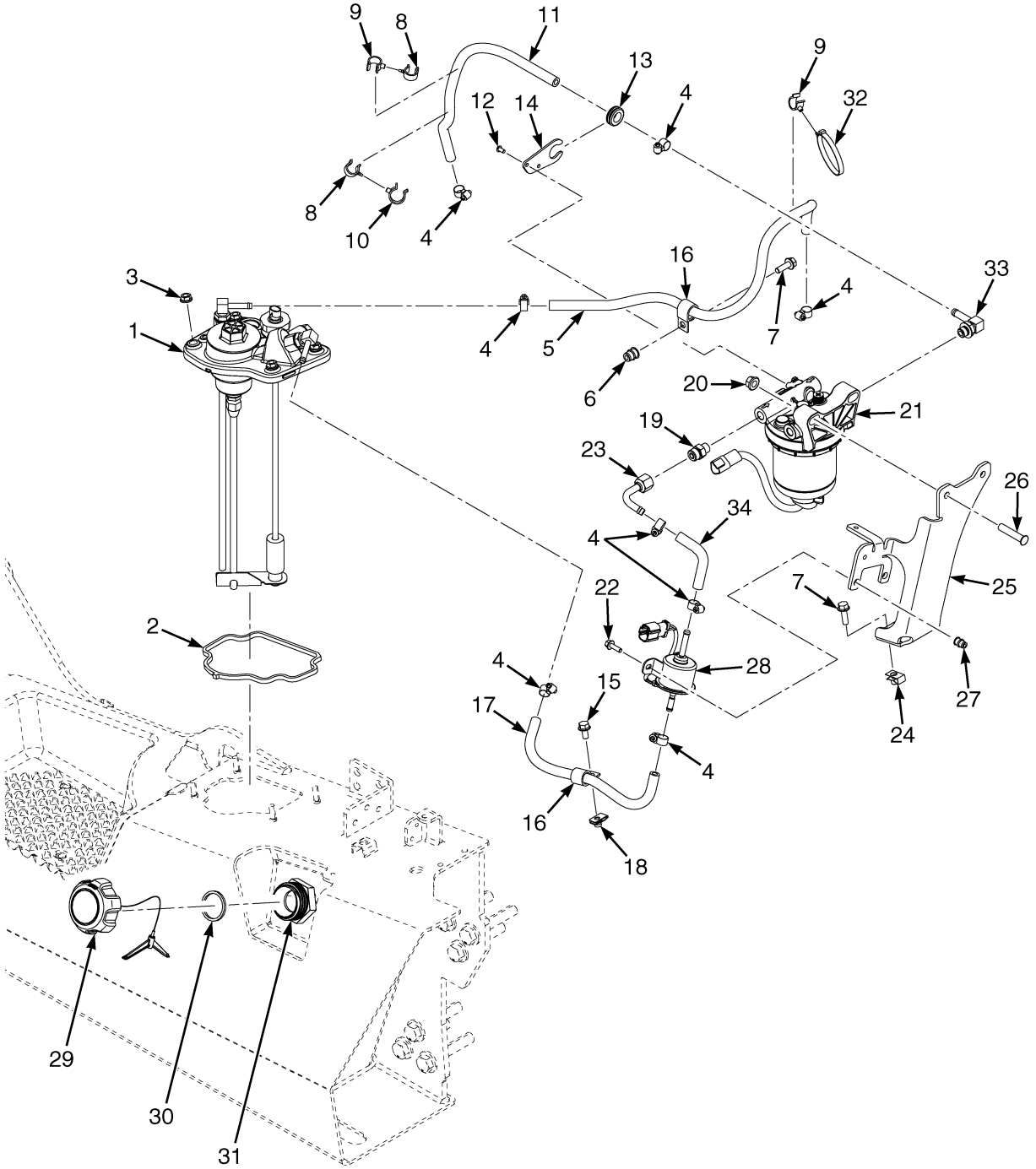

©2026 HYSTER COMPANY

FUEL SYSTEM

2.1L (→ 9/2021)

ITEM	PART NO.	DESCRIPTION	QTY
1	4256643	Fuel Sender (☞Figure 10-3)	1
2	4255799	Gasket	1
3	~~1382472~~		
	1502543	Nut	4
4	168718	Clamp	8
5	4697309	Hose	1
6	1530243	Insert	1
7	1510113	Capscrew	3
8	1542442	Clamp (Swivel)	2
9	1606544	Clamp (Swivel)	2
10	1502053	Clamp (Swivel)	1
11	4697307	Hose	1
12	4044957	Capscrew	2
13	1379595	Grommet	1
14	4260910	Bracket (Fuel Hose)	1
15	~~4109993~~		
	1527879	Capscrew	1
16	89220	Clamp	2
17	4697304	Hose	1
18	1480237	Nut (Foldover)	1
19	1486740	Fitting	1
20	1460477	Nut	2
21	4697770	Water Separator	1
21	4280393	Sensor (Water in Fuel)	1
21	4695218	Water Separator (Fuel Filter)	1
22	1527877	Capscrew	2
23	4708114	Tube Assy	1
24	1398062	Nut (Fold Over)	2
25	4309585	Bracket	1
26	4261067	Stud	2
27	1531001	Insert	2
28	4260236	Lift Pump	1
29	4258945	Fuel Cap	1
30	4262347	Gasket	1
31	4247907	Adapter	1
32	1502061	Clamp (Swivel)	1
33	17221	Fitting	1
33	16483	O-Ring	1
34	4708128	Hose	1

©2026 HYSTER COMPANY

FUEL SYSTEM (FIGURE 10-2)

2.1L (9/2021 →)

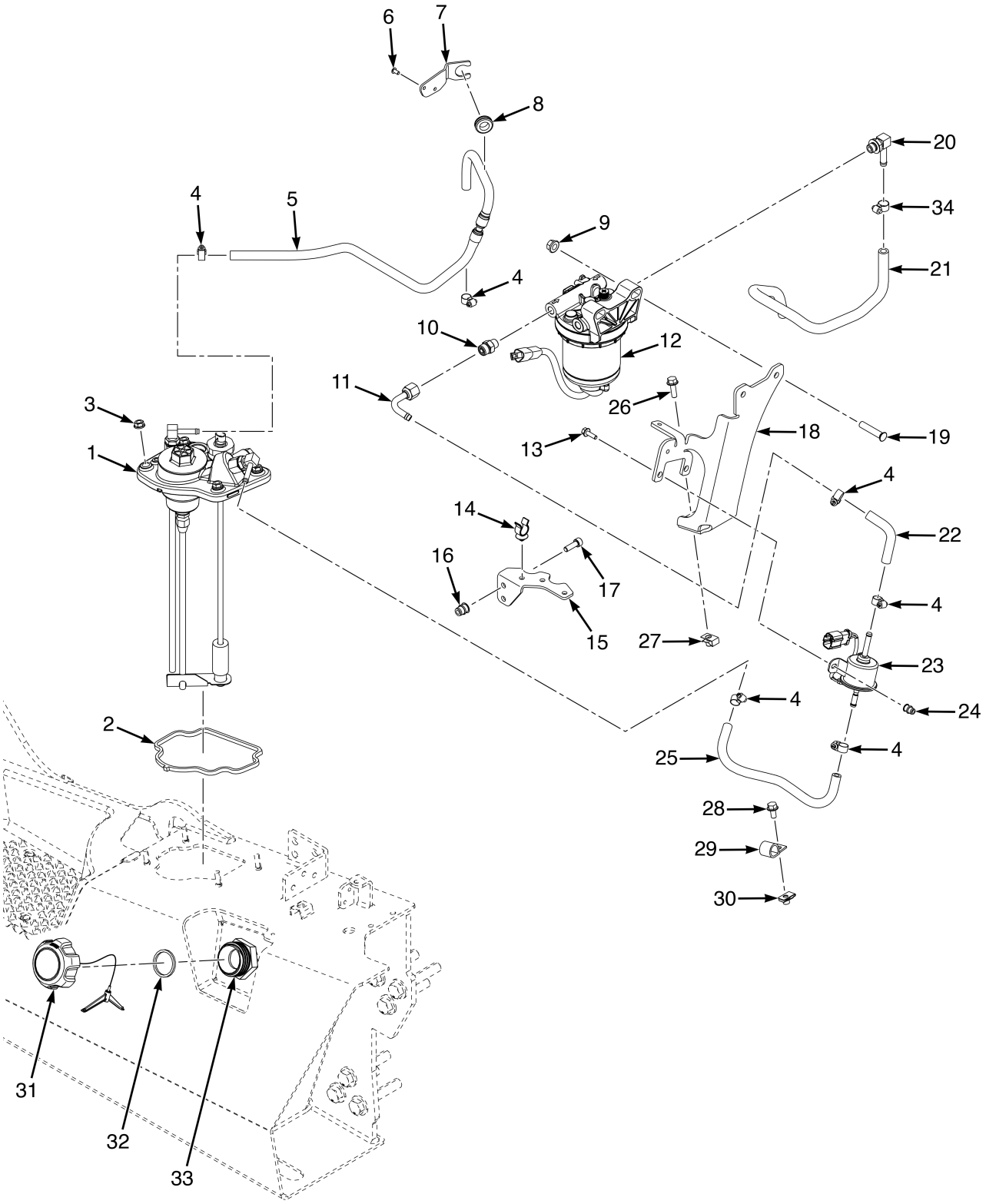

©2026 HYSTER COMPANY

FUEL SYSTEM

2.1L (9/2021 →)

ITEM	PART NO.	DESCRIPTION	QTY
1	4256643	Fuel Sender (☞Figure 10-3)	1
2	4255799	Gasket	1
3	~~1382472~~		
	1502543	Nut	4
4	168718	Clamp	6
5	4714387	Hose (Fuel Return)	1
6	4044957	Capscrew	2
7	4323723	Bracket (Fuel Hose)	1
8	1379595	Grommet	1
9	1460477	Nut	2
10	1486740	Fitting	1
10	~~6992657~~		
	265787	O-Ring	1
11	4708114	Tube Assy	1
11	4215051	Fitting (Alternate Part)	1
12	4697770	Water Separator	1
12	4695218	Water Separator (Fuel Filter)	1
12	4280393	Sensor (Water in Fuel)	1
13	1527877	Capscrew	2
14	. . . . .	Clip	1
15	4324052	Bracket (Fuel Line Support)	1
16	1530243	Insert	2
17	296011	Capscrew	2
17	1510113	Capscrew (Alternate Part)	2
18	4309585	Bracket	1
19	4261067	Stud	1
20	17221	Fitting	1
20	16483	O-Ring	1
21	4713790	Hose (Diesel Supply)	1
22	4708128	Hose	1
22	4717888	Hose (Alternate Part)	1
23	4260236	Lift Pump	1
24	1531001	Insert	2
25	4697304	Hose	1
26	1510113	Capscrew	2
27	1398062	Nut (Fold Over)	2
28	~~4109993~~		
	1527879	Capscrew	1
29	89220	Clamp	1
30	1480237	Nut (Foldover)	1
31	4258945	Fuel Cap	1
32	4262347	Gasket	1
33	4247907	Adapter	1
34	168718	Clamp	2
34	166857	Clamp (Alternate Part)	2

FUEL SENDER ASSEMBLY (FIGURE 10-3)

2.1L

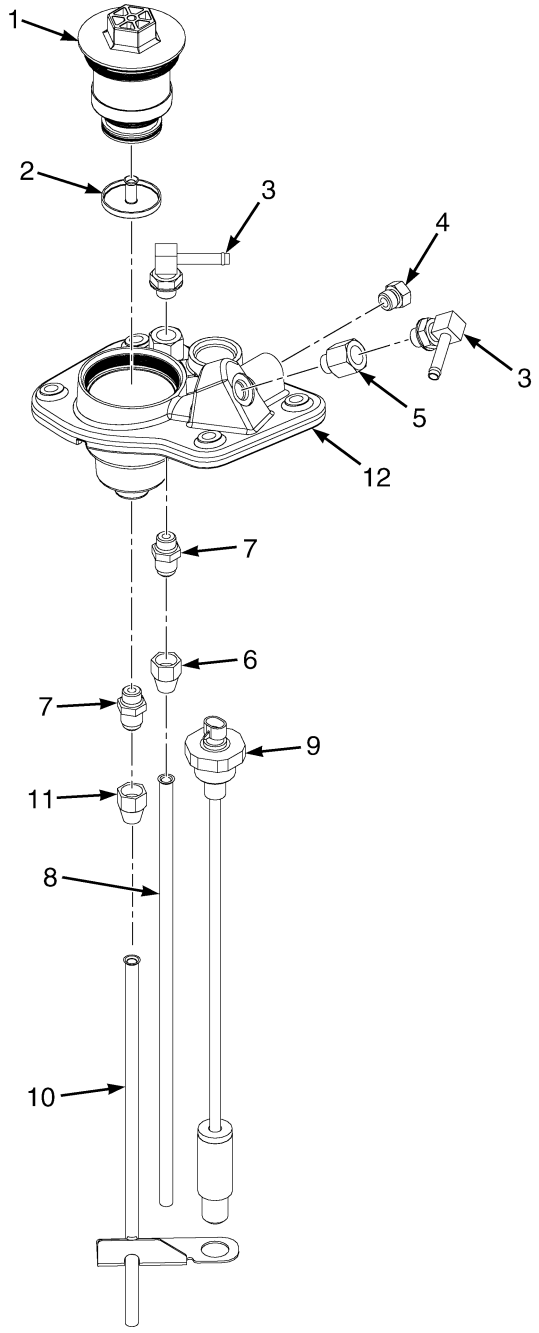

BP130620

See Service Manual for service procedures.
©2026 HYSTER COMPANY

ITEM	PART NO.	DESCRIPTION	QTY
	4256643	Fuel Sender	1
1	~~4255292~~		
	4697699	Strainer	1
2	4258856	Shield , Debris	1
3	4026040	Fitting	2
4	14594	Plug	1
5	4026085	Fitting	1
5	16483	O-Ring	1
6	16121	Fitting	1
7	4627283	Fitting	1
8	4684320	Tube - Fuel Return	1
9	4272046	Fuel Sender	1
10	4255290	Tube Assy	1
11	16121	Fitting	1
12	. . . . .	Fuel Sender Manifold	1

©2026 HYSTER COMPANY

FUEL SYSTEM (FIGURE 10-4)
3.0L AND 3.3L

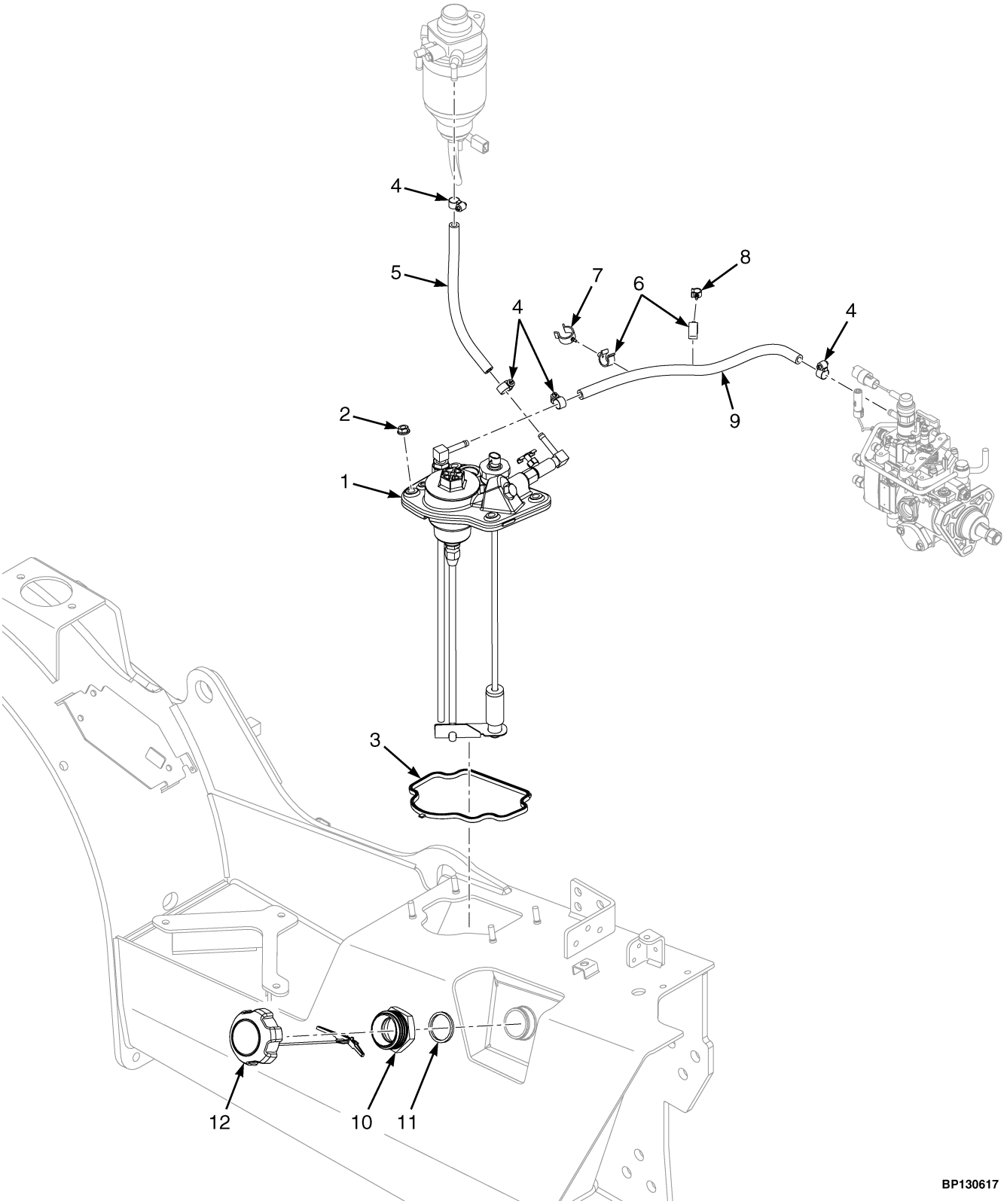

©2026 HYSTER COMPANY

FUEL SYSTEM
3.0L AND 3.3L

ITEM	PART NO.	DESCRIPTION	QTY
1	4259966	Fuel Sender (☞Figure 10-5)	1
2	~~1382472~~		
	1502543	Nut	4
3	4255799	Gasket	1
4	168718	Clamp	4
5	4697317	Hose	1
6	1606544	Clamp (Swivel)	2
7	1502066	Clamp (Swivel)	1
8	1573549	Clamp (Swivel)	1
9	4697318	Hose	1
10	**a** 4247907	Adapter	1
11	**b** 4262347	Gasket	1
12	4258945	Fuel Cap	1
12	1579677	Fuel Cap (Lockable Version) (Optional)	1

FOOTNOTES:

a For use with Standard Fuel Cap.

b Primary for Locking Fuel Cap.

©2026 HYSTER COMPANY

FUEL SENDER ASSEMBLY (FIGURE 10-5)

3.0L AND 3.3L

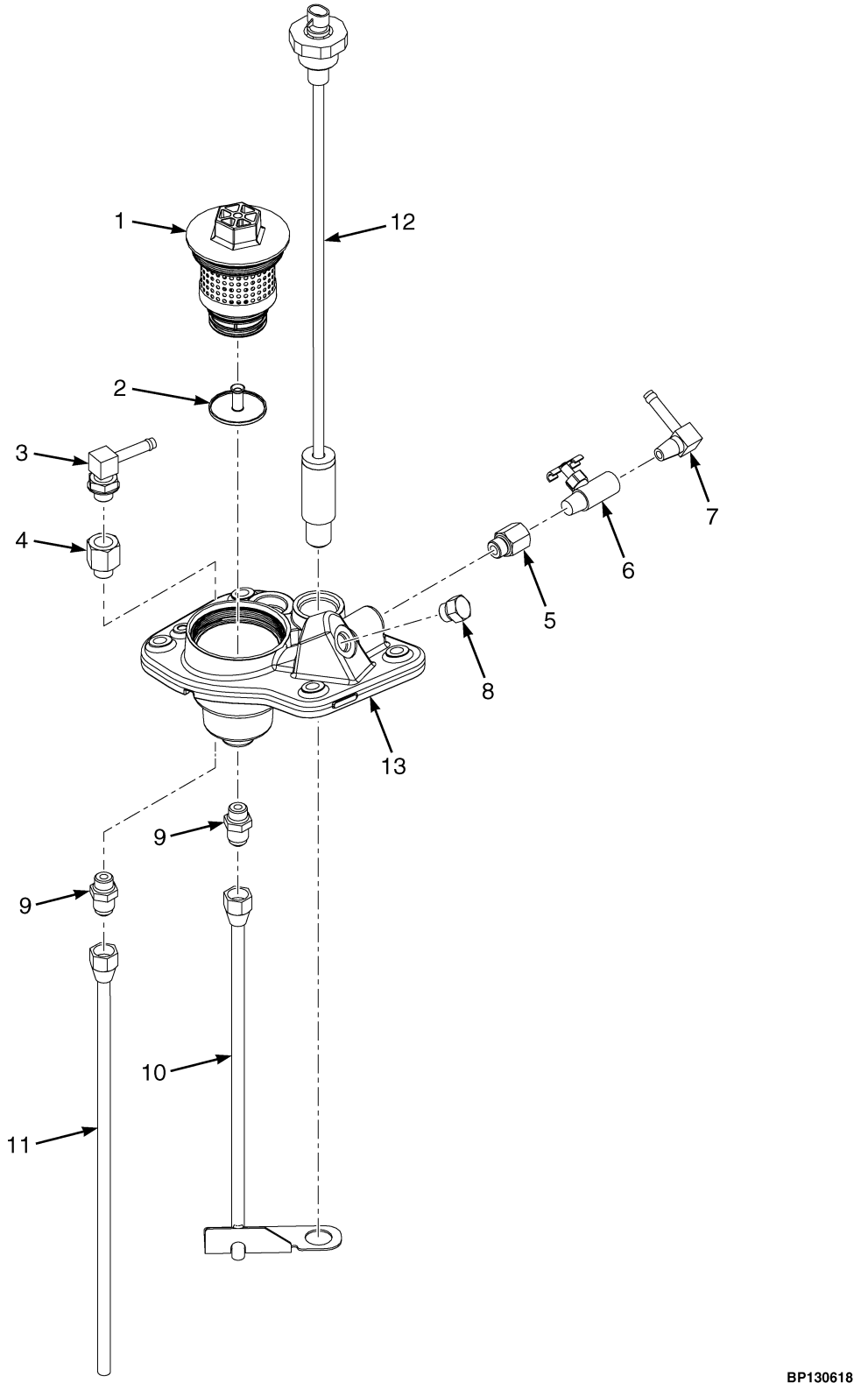

©2026 HYSTER COMPANY

ITEM	PART NO.	DESCRIPTION	QTY
	4259966	Fuel Sender	1
1	~~4255292~~		
	4697699	Strainer	1
2	4258856	Shield , Debris	1
3	4026040	Fitting	1
4	4026085	Fitting	1
4	16483	O-Ring	1
5	1490617	Fitting	1
6	16190	Drain Valve (Shutoff)	1
7	192306	Fitting	1
8	14594	Plug	1
9	4627283	Fitting	2
10	4255290	Tube Assy	1
11	4684320	Tube - Fuel Return	1
12	4272046	Fuel Sender	1
13	4713693	Manifold - Fuel Sender	1

©2026 HYSTER COMPANY

E-THROTTLE ACTUATOR (FIGURE 10-6)

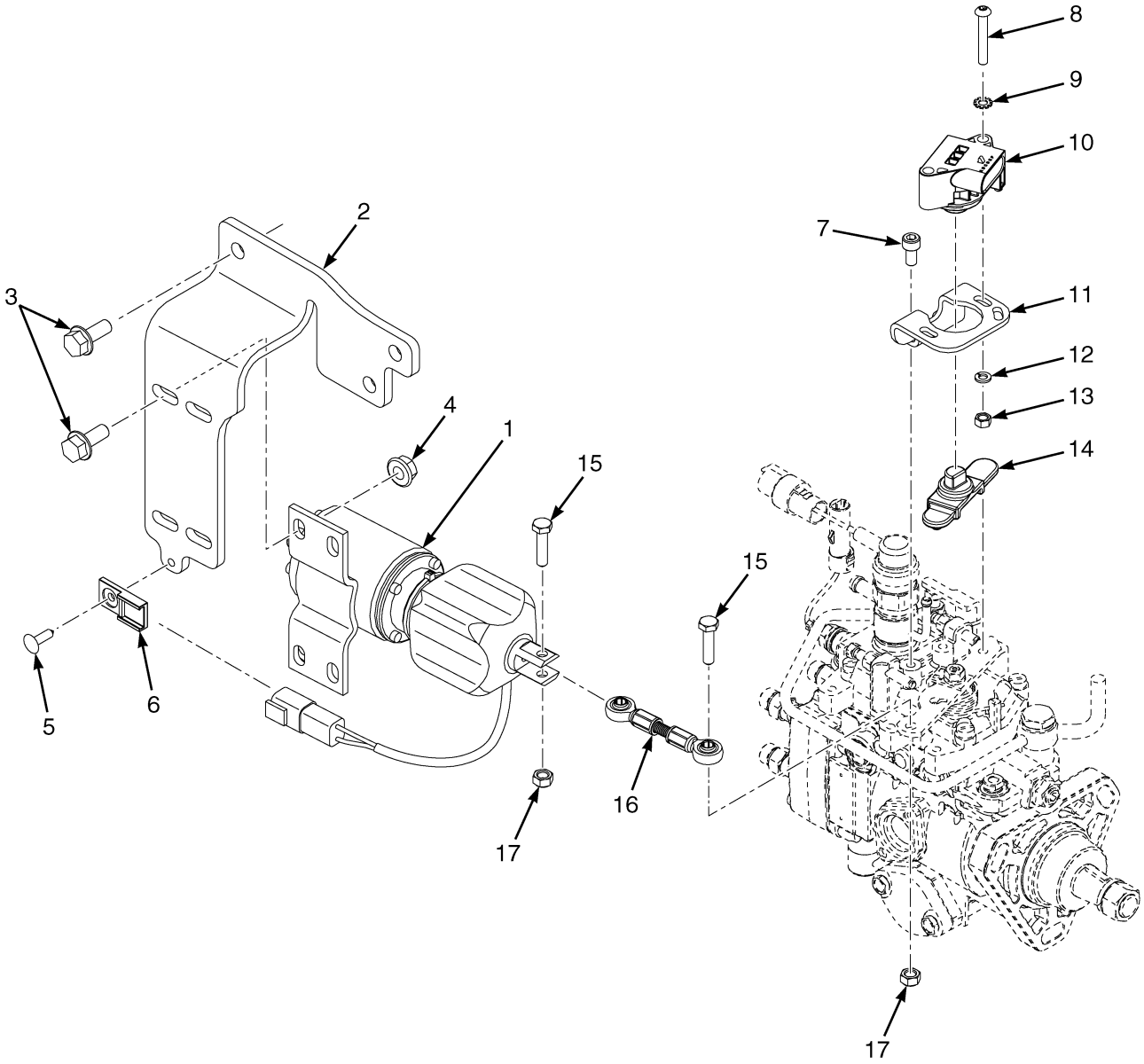

BP130634

©2026 HYSTER COMPANY

E-THROTTLE ACTUATOR

ITEM	PART NO.	DESCRIPTION	QTY
1	2107187	Actuator	1
2	4252124	Bracket	1
3	1527880	Capscrew	7
4	~~1382472~~		
	1502543	Nut	4
5	1344124	Fastener	1
6	1500912	Clip	1
7	293762	Capscrew	2
8	1553897	Capscrew	2
9	296378	Washer	2
10	2080376	Sensor (Hall Throttle Postion)	1
11	1616491	Bracket	1
12	292679	Washer	2
13	292668	Nut	2
14	2078335	Rotor	1
15	287816	Capscrew	2
16	4649561	Linkage	1
17	302399	Nut	2

©2026 HYSTER COMPANY

NOTES

©2026 HYSTER COMPANY

11 ELECTRICAL SYSTEM

SECTION 11
ELECTRICAL SYSTEM

DESCRIPTION **PAGE**

12V BATTERY ARRANGEMENT
2.1L DIESEL (→ 4/2021) 11-6
2.1L DIESEL (4/2021 →) 11-8
2.2L LPG AND 3.0 AND 3.3L DIESEL (→ 4/2021) 11-12
2.2L LPG AND 3.0 AND 3.3L DIESEL (4/2021 →) 11-16
12V BATTERY DISCONNECT 11-19
AMBIENT LIGHT SENSOR 11-20
AUDIBLE ALARM 11-21
BATTERY CABLES
TYPE S CABLES - 2.1L DIESEL (→ 4/2021) 11-26
W/ POSITIVE AND OR NEGATIVE DISCONNECT - 2.1L DIESEL 11-22
BATTERY CABLES AND CONTACTOR
YANMAR 2.1 DIESEL 11-32
YANMAR 2.1 DIESEL - TYPE S 11-38
YANMAR 2.2 LPG/GAS 11-28
YANMAR 2.2 LPG/GAS - ALTERNATE ARRANGEMENT 11-30
YANMAR 3.0 AND 3.3 DIESEL IDI 11-36
YANMAR DIESEL IDI - TYPE S 11-46
YANMAR LPG/GAS - TYPE S 11-42
BATTERY DISCONNECT SWITCH
LOW VOLTAGE AND TYPE S 11-50
CAB HARNESS
2.1L DIESEL 11-52
2.2L LPG AND 3.0L AND 3.3L DIESEL 11-54
CABLE
POSITIVE BATTERY CABLE - 2.1L (→ 4/2021) 11-56
CONTROL PANEL ARRANGEMENT 11-58
ALTERNATE CONFIGURATION 11-60
E-HYDRAULIC (→ 7/2022) 11-62
E-HYDRAULIC - WITH RIDE THRU 11-64
DASH ROCKER SWITCH ARRANGEMENT
WORK LIGHT - WITH USB AND 12V OUTLETS 11-66
DISPLAY 11-68
REAR MOUNTED 11-70
ELECTRICAL ARRANGEMENT
FRAME 11-72
FRAME - ALTERNATE CONFIGURATION 11-74
MAST - WITH MAST LIGHTS 11-78
FUSE BOX
MOUNTING 11-80
HARNESS RETENTION
ENGINE - 2.1L DIESEL 11-82
ENGINE - 2.2L LPG 11-84
ENGINE - 2.2L LPG/BI-FUEL (ALTERNATE CONFIGURATION) 11-86
ENGINE - 3.0L AND 3.3L DIESEL 11-88
HYDROSTATIC TRANSMISSION 11-90
OHG, TRANSMISSION AND AUDIBLE ALARM (→ 4/2021) 11-92
OHG, TRANSMISSION AND AUDIBLE ALARM (4/2021 →) 11-94
SINGLE SPEED TRANSMISSION 11-96

©2026 HYSTER COMPANY

SECTION 11
ELECTRICAL SYSTEM

DESCRIPTION **PAGE**

STEER COLUMN - WITH ANCILLARY PARTS 11-98
HEADLINER ROCKER SWITCH ARRANGEMENT
WITH DOME LIGHT 11-100
HORN 11-102
IMPACT SENSOR 11-103
JOYSTICK ASSEMBLY 11-104
LEVER POSITION MONITORING
MANUAL HYDRAULICS - ACCESSORY 1 11-107
LIFT HEIGHT SENSOR
2 AND 3 STAGE FFL 11-110
2 STAGE LFL 11-108
AND HARNESS - FOUR STAGE FULL FREE-LIFT 11-111
DISCRETE 11-113
LIGHT
REAR WORK LIGHT AIR CONDITIONER MOUNTED - MANUFACTURING OPTION 11-123
STROBE LIGHT - MANUFACTURING OPTION 11-118
LIGHTS
RED LINE - WITH REAR WORK LIGHT 11-114
SPOT LIGHTS - WITHOUT WORK LIGHTS OR MARKER 11-119
SPOT LIGHTS AND STROBE 11-116
TAIL LIGHTS AND REFLECTORS - WITH LIGHT COVER 11-125
WORK LIGHTS - TWO FRONT / ONE REAR 11-121
WORK LIGHTS - FRONT MARKER 11-124
MINI-LEVER CONTROLS
FOUR FUNCTION - WITHOUT RTST 11-128
FOUR FUNCTION - WITH RTST 11-132
FOUR FUNCTION WITH SHELF HEIGHT SELECTOR - WITHOUT RTST 11-138
FOUR FUNCTION WITH SHELF HEIGHT SELECTOR - WITH RTST 11-140
THREE FUNCTION - WITHOUT RTST 11-126
THREE FUNCTION - WITH RTST 11-130
THREE FUNCTION WITH SHELF HEIGHT SELECTOR - WITHOUT RTST 11-134
THREE FUNCTION WITH SHELF HEIGHT SELECTOR - WITH RTST 11-136
OHG WITHOUT REAR LIGHT
RESISTOR AND ATTACHING PARTS 11-142
POWER TO MAST
HARNESS AND ANCILLARY PARTS (→ 8/2025) 11-143
HARNESS AND ANCILLARY PARTS (8/2025 →) 11-144
TELEMETRY OPTIONS 11-148
ALTERNATE CONFIGURATION 11-150
TILT SENSOR 11-152
TRUCK START
PUSHBUTTON WITH REMOTE KEY SWITCH 11-153
WIRE HARNESS
12V AUXILIARY SUPPLY 11-154
AUDIBLE ALARM 11-156
AUDIBLE ALARM JUMPER 11-157
AUTO HIBERNATION - PARKING BRAKE (12/2024 →) 11-350
AUX 2 - CONTACTOR KEYED POWER 11-158
CAB - LOWER 11-160

©2026 HYSTER COMPANY

SECTION 11
ELECTRICAL SYSTEM

DESCRIPTION **PAGE**

CAB - LOWER (ALTERNATE PART) 11-164
CAB - UPPER 11-168
CAB - UPPER (ALTERNATE PART) 11-172
CAB - WASHER PUMP JUMPER 11-176
CHASSIS (BASE OPTION) - POWERSHIFT TRANSMISSION 11-178
CHASSIS (BASE OPTION) - POWERSHIFT TRANSMISSION (ALTERNATE PART) 11-184
CHASSIS (BASE OPTION) - DIESEL IDI - SINGLE SPEED TRANSMISSION (→ 3/2024) 11-246
CHASSIS (DIESEL IDI - SINGLE SPEED TRANSMISSION) - PAGE 1 OF 3 (3/2024 →) 11-264
CHASSIS (DIESEL IDI - SINGLE SPEED TRANSMISSION) - PAGE 2 OF 3 (3/2024 →) 11-270
CHASSIS (DIESEL IDI - SINGLE SPEED TRANSMISSION) - PAGE 3 OF 3 (3/2024 →) 11-276
CHASSIS (FULL OPTION) - POWERSHIFT TRANSMISSION (PAGE 1 OF 2) (9/2021 ↔ 11/2023) 11-226
CHASSIS (FULL OPTION) - POWERSHIFT TRANSMISSION (PAGE 2 OF 2) (9/2021 ↔ 11/2023) 11-232
CHASSIS (FULL OPTION) - DIESEL IDI - SINGLE SPEED TRANSMISSION (PAGE 1 OF 2) (→ 3/2024) 11-252
CHASSIS (FULL OPTION) - DIESEL IDI - SINGLE SPEED TRANSMISSION (PAGE 2 OF 2) (→ 3/2024) 11-258
CHASSIS (FULL OPTION) - HYDROSTATIC TRANSMISSION (PAGE 1 OF 2) (→ 2/2024) 11-280
CHASSIS (FULL OPTION) - HYDROSTATIC TRANSMISSION (PAGE 1 OF 2) (2/2024 →) 11-286
CHASSIS (FULL OPTION) - HYDROSTATIC TRANSMISSION (PAGE 2 OF 2) (→ 2/2024) 11-292
CHASSIS (FULL OPTION) - HYDROSTATIC TRANSMISSION (PAGE 2 OF 2) (2/2024 →) 11-298
CHASSIS (MID AND FULL OPTION) - POWERSHIFT TRANSMISSION (PAGE 1 OF 2) (3/2021 ↔ 9/2021) 11-202
CHASSIS (MID AND FULL OPTION) - POWERSHIFT TRANSMISSION (PAGE 2 OF 2) (3/2021 ↔ 9/2021) 11-208
CHASSIS (MID AND FULL OPTION) - POWERSHIFT TRANSMISSION (11/2023 →) 11-238
CHASSIS (MID OPTION) - POWERSHIFT TRANSMISSION (PAGE 1 OF 2) (→ 3/2021) 11-190
CHASSIS (MID OPTION) - POWERSHIFT TRANSMISSION (PAGE 2 OF 2) (→ 3/2021) 11-196
CHASSIS (MID OPTION) - POWERSHIFT TRANSMISSION (PAGE 1 OF 2) (9/2021 ↔ 11/2023) 11-214
CHASSIS (MID OPTION) - POWERSHIFT TRANSMISSION (PAGE 2 OF 2) (9/2021 ↔ 11/2023) 11-220
COLUMN - BASE 11-302
COLUMN - BASE (ALTERNATE PART) 11-306
COLUMN - FULL LEVERS 11-310
COLUMN - FULL LEVERS (ALTERNATE PART) 11-314
DISPLAY 11-316
DUAL THROTTLE PEDAL 11-318
E-HYDRAULICS 11-320
ENGINE - IDI WITH E-THROTTLE 11-382
ENGINE - IDI WITH E-THROTTLE (ALTERNATE) 11-386
FRONT OHG 11-323
FUEL PUMP 11-324
HYDRAULIC FAN DRIVE 11-325
HYDRAULIC FAN DRIVE - ALTERNATE PART 11-328
HYDROSTATIC TRANSMISSION 11-330
JUMPER - SEAT COMPRESSOR 11-333
LIFT HEIGHT - BASIC 11-334
LOWER MAST WORK LIGHTS - 2 LIGHTS 11-335
LOWER MAST WORK LIGHTS - 4 LIGHTS 11-336
MAINTENANCE CHARGE 11-337
M-HYD SPS JUMPER (BASE 11-338

©2026 HYSTER COMPANY

SECTION 11
ELECTRICAL SYSTEM

DESCRIPTION **PAGE**

M-HYD SPS JUMPER (MID/FULL 11-340
PARKING BRAKE - WET BRAKE ACTUATION (→ 9/2024) 11-344
PARKING BRAKE - WET BRAKE ACTUATION (9/2024 ↔ 12/2024) 11-346
PEDESTRIAN AWARENESS LIGHT 11-342
POWER CABLE - HIGH OUTPUT ALTERNATOR (LPG) 11-391
POWER TO MAST 11-354
REAR CAMERA - WITH FRONT DISPLAY 11-358
REAR CAMERA - WITH REAR DISPLAY 11-360
REAR OHG 11-362
REAR OHG (BASE OPTION) - ALTERNATE PART 11-365
REAR OHG (FULL OPTION) - ALTERNATE PART (→ 7/2022) 11-368
REAR OHG (FULL OPTION) - ALTERNATE PART (7/2022 →) 11-370
REAR OHG (MID OPTION) - ALTERNATE PART 11-366
SEAT - AIR RIDE SUSPENSION 11-373
SEAT - MECHANICAL SUSPENSION 11-375
TILT PROPORTION VALVE JUMPER 11-390
UPPER MAST WORK LIGHT 11-377
WIRE TAKE-UP 11-379

©2026 HYSTER COMPANY

NOTES

12V BATTERY ARRANGEMENT (FIGURE 11-1)

2.1L DIESEL (→ 4/2021)

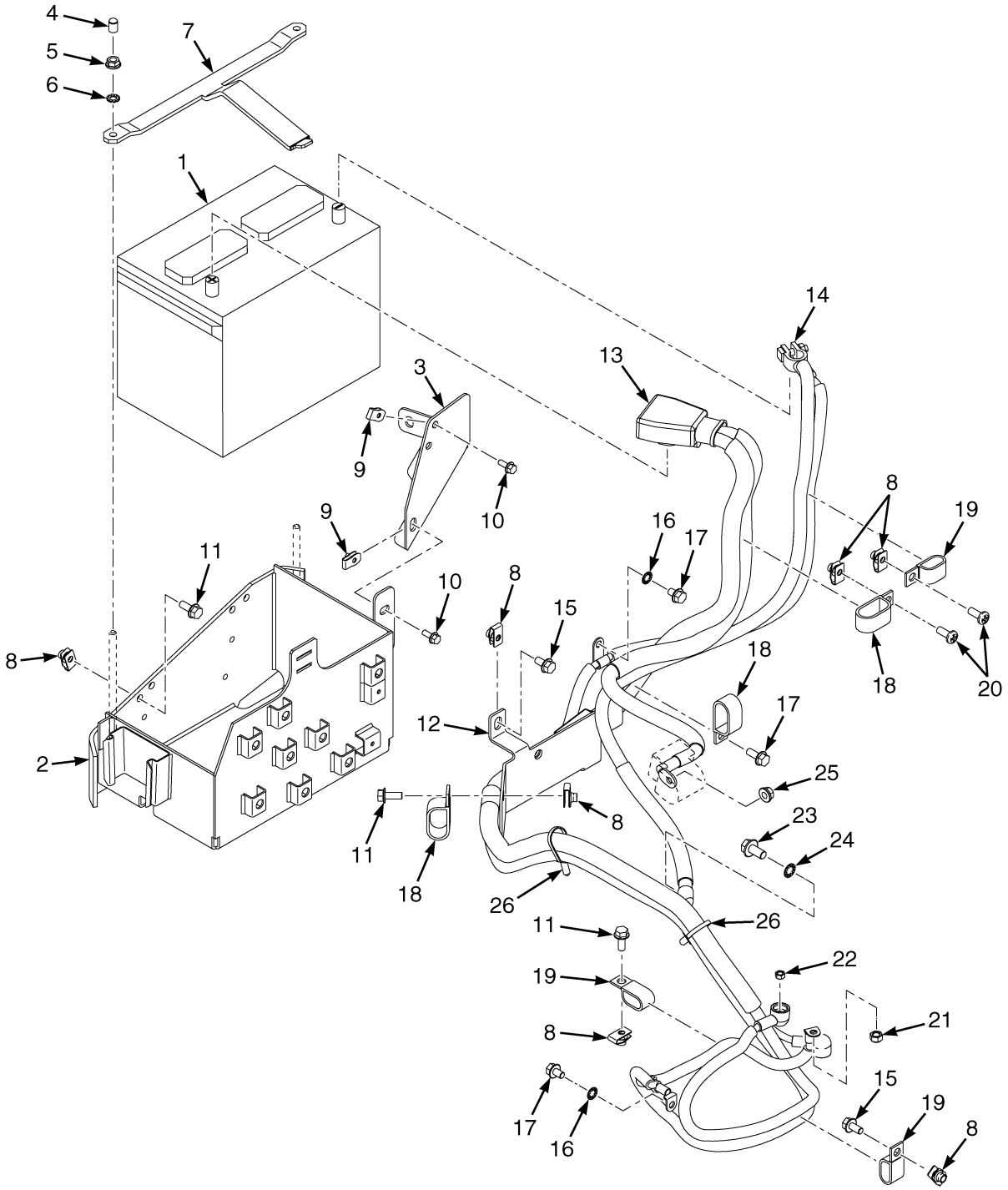

©2026 HYSTER COMPANY

12V BATTERY ARRANGEMENT

2.1L DIESEL (→ 4/2021)

ITEM	PART NO.	DESCRIPTION	QTY
1	1643935	Start Battery Wet	1
1	1377998	Start Battery Wet (Optional)	1
1	1643936	Start Battery Wet (High Capacity Starter Battery)	1
2	4247733	Holder - Battery	1
2	4376316	Holder - Battery (Alternate Part)	1
3	4273194	Bracket Wldmt - Battery Tray	1
4	1540805	Cap	2
5	~~1382472~~		
	1502543	Nut	2
6	296380	Washer	2
7	4259043	Bracket	1
8	1480237	Nut (Foldover)	11
9	1566420	Nut (Foldover)	3
10	~~4111055~~		
	1527876	Capscrew	3
11	1527880	Capscrew	6
12	4249125	Bracket	1
12	4351722	Bracket , Battery Cable (Alternate Part)	1
13	4699869	Battery Cable - Positive	1
14	4699870	Battery Cable - Negative	1
15	~~4109993~~		
	1527879	Capscrew	3
16	15918	Lockwasher	2
17	1529366	Capscrew	2
18	129684	Clamp	4
19	119074	Clamp	3
20	302061	Screw	2
21	302400	Nut	1
22	302399	Nut	1
23	1528778	Capscrew	1
24	15920	Lockwasher	1
25	4286499	Nut	1
26	4140361	Cable Clip	2
99	**a** 4085110	Battery Disconnect (Optional) (☞Figure 11-5)	1

FOOTNOTES:

a Used in conjunction with negative battery cable terminal.

12V BATTERY ARRANGEMENT (FIGURE 11-2)

2.1L DIESEL (4/2021 →)

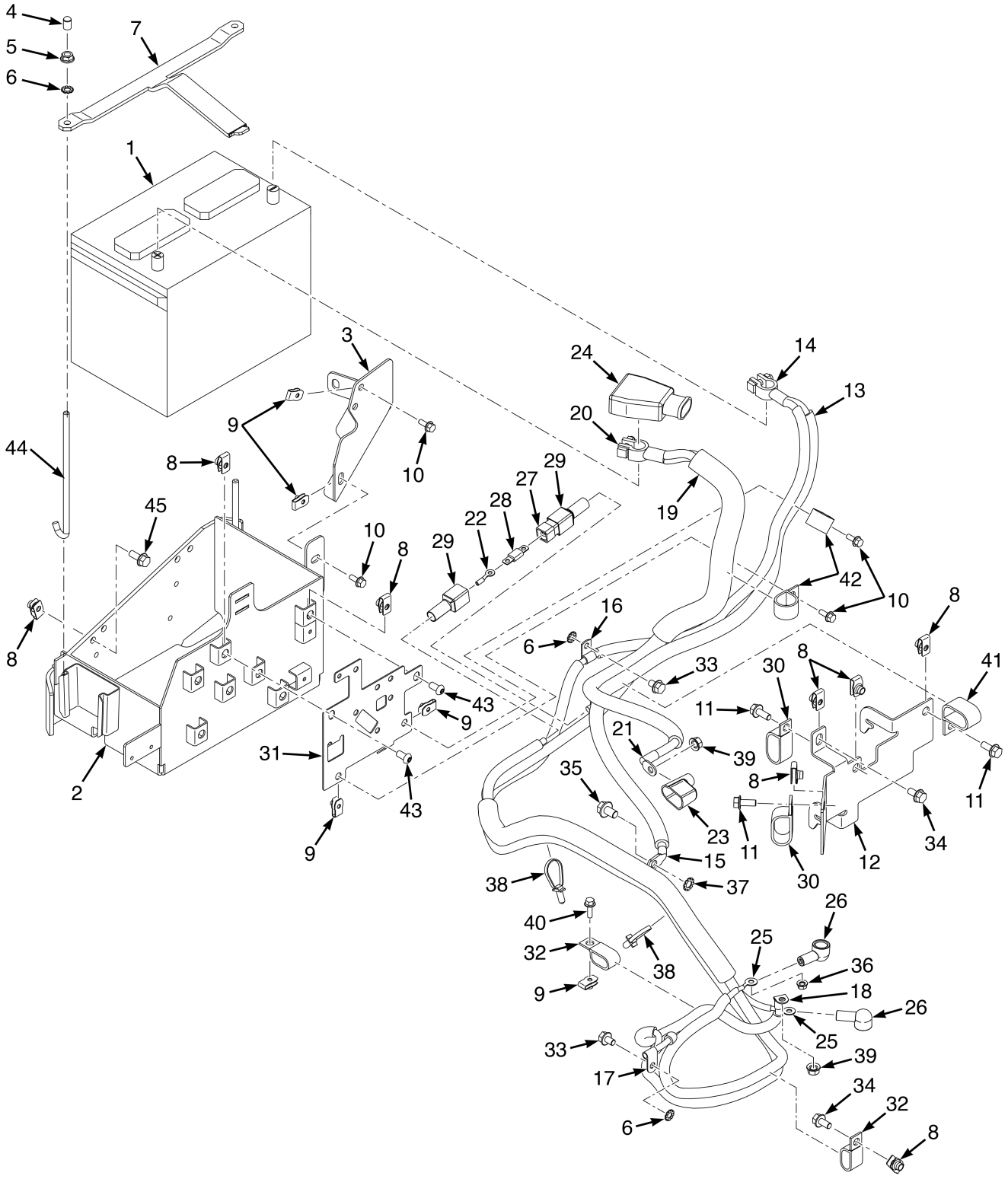

©2026 HYSTER COMPANY

12V BATTERY ARRANGEMENT

2.1L DIESEL (4/2021 →)

ITEM	PART NO.	DESCRIPTION	QTY
1	1643935	Start Battery Wet	1
1	1643936	Start Battery Wet (High Capacity Starter Battery)	1
1	1377998	Start Battery Wet (Optional)	1
2	4247733	Holder - Battery	1
2	**a c** 4376316	Holder - Battery (Alternate Part)	1
3	4273194	Bracket Wldmt - Battery Tray	1
4	1540805	Cap	2
5	~~1382472~~		
	1502543	Nut	2
6	296380	Washer	4
7	4259043	Bracket	1
8	1480237	Nut (Foldover)	9
9	1566420	Nut (Foldover)	6
10	~~4111055~~		
	1527876	Capscrew	5
11	1527880	Capscrew	3
12	4249125	Bracket	1
12	4351722	Bracket , Battery Cable (Alternate Part)	1
13	4711323	Battery Cable (Negative)	1
14	148790	Terminal	1
15	4221129	Terminal - Power	1
16	274221	E-Ring	1
17	203691	Fitting	1
18	4696001	Terminal	1
19	4711324	Battery Cable (Positive)	1
20	148792	Terminal	1
21	4296734	Terminal	1
22	806424	E-Ring	2
23	4320004	Boot	1
24	1529550	Boot	1
25	806425	E-Ring	2
26	1520864	Boot	2
27	4695999	Fuse Holder	1
28	4707988	Fuse	1
29	4286097	Boot	2
30	129684	Clamp	2
31	4318458	Bracket	1
31	**b** 4371655	Bracket (Alternate Part)	1
32	119074	Clamp	2
33	1529366	Capscrew	2
34	~~4109993~~		
	1527879	Capscrew	2
35	1528778	Capscrew	1
36	4295553	Nut	1
37	296381	Washer	1
38	4140361	Cable Clip	2
39	4286499	Nut	2
40	1527877	Capscrew	1
41	4241995	Clamp	1
42	178119	Clamp	2

©2026 HYSTER COMPANY

12V BATTERY ARRANGEMENT

2.1L DIESEL (4/2021 →)

ITEM	PART NO.	DESCRIPTION	QTY
43	4120965	Screw	2
44	4714225	Link (Battery Hold Down)	2
45	1527880	Capscrew	2
45	1510113	Capscrew (Alternate Part)	2
	d e 4085110	Battery Disconnect (Optional) (☞Figure 11-5)	1

FOOTNOTES:

a Battery Holder is not compatible with 4318458 Bracket. Replace Bracket with 4371655.

b Bracket is not compatible with 4247733 Battery Holder. Replace Battery Holder with 4376316.

c Must be replaced together if previous parts installed.

d Not Illustrated

e Used in conjunction with negative battery cable terminal.

©2026 HYSTER COMPANY

NOTES

12V BATTERY ARRANGEMENT (FIGURE 11-3)

2.2L LPG AND 3.0 AND 3.3L DIESEL (→ 4/2021)

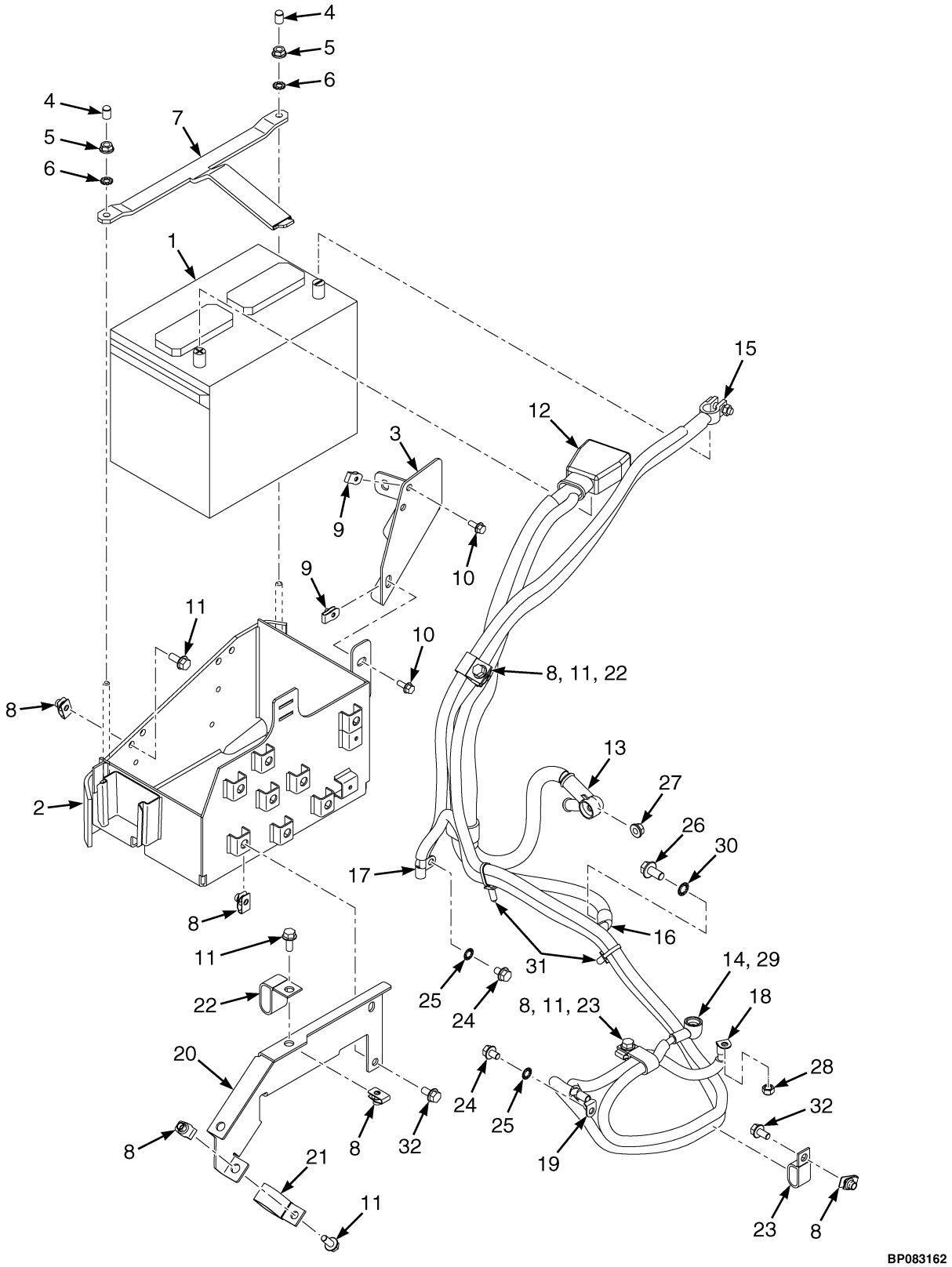

©2026 HYSTER COMPANY

12V BATTERY ARRANGEMENT

2.2L LPG AND 3.0 AND 3.3L DIESEL (→ 4/2021)

KEY:
A: LPG
B: DSL

ITEM	PART NO.	DESCRIPTION	QTY A	QTY B
1	1643935	Start Battery Wet	1	..
1	1643936	Start Battery Wet (High Capacity Starter Battery)	1	..
1	1643936	Start Battery Wet	..	1
1	1378031	Battery (Wet) (High Capacity Starter Battery)	..	1
2	4247733	Holder - Battery	1	1
2	**a** 4376316	Holder - Battery (Alternate Part)	1	1
3	4273194	Bracket Wldmt - Battery Tray	1	1
4	1540805	Cap	2	2
5	~~1382472~~			
	1502543	Nut	2	2
6	296380	Washer	2	2
7	4259043	Bracket	1	1
8	1480237	Nut (Foldover)	10	10
9	1566420	Nut (Foldover)	3	3
10	~~4111055~~			
	1527876	Capscrew	3	3
11	1527880	Capscrew	6	6
12	4700171	Battery Cable - Positive	1	..
12	4700172	Battery Cable - Positive	..	1
12	148792	Terminal	1	1
12	1529550	Boot	1	1
13	194368	E-Ring	1	1
13	1629204	Boot	1	1
14	806425	E-Ring	1	1
14	1520864	Boot	1	1
15	4700270	Battery Cable - Negative	1	..
15	4700170	Battery Cable - Negative	..	1
15	148789	Terminal	1	1
16	1520490	Terminal	1	1
17	4165765	Terminal	1	1
18	4696001	Terminal	1	1
19	4699802	Terminal	1	1
20	4257902	Bracket	1	1
21	4241995	Clamp	2	2
22	1326653	Clamp	2	2
23	119074	Clamp	2	2
24	1529366	Capscrew	2	2
25	15918	Lockwasher	2	2
26	1528778	Capscrew	1	1
27	4286499	Nut	1	1
28	302400	Nut	1	1
29	302399	Nut	1	1
30	15920	Lockwasher	1	1
31	4140361	Cable Clip	2	2
32	~~4109993~~	Capscrew	4	4

12V BATTERY ARRANGEMENT

2.2L LPG AND 3.0 AND 3.3L DIESEL (→ 4/2021)

KEY:
A: LPG
B: DSL

ITEM	PART NO.	DESCRIPTION	QTY A	QTY B
	1527879			
b c	4085110	Battery Disconnect (Optional) (☞Figure 11-5).....	1	1

FOOTNOTES:

a Battery Holder is not compatible with 4315847 Contactor Bracket. Replace Bracket with 4371832.

b Not Illustrated

c Used in conjunction with negative battery cable terminal.

©2026 HYSTER COMPANY

NOTES

12V BATTERY ARRANGEMENT (FIGURE 11-4)

2.2L LPG AND 3.0 AND 3.3L DIESEL (4/2021 →)

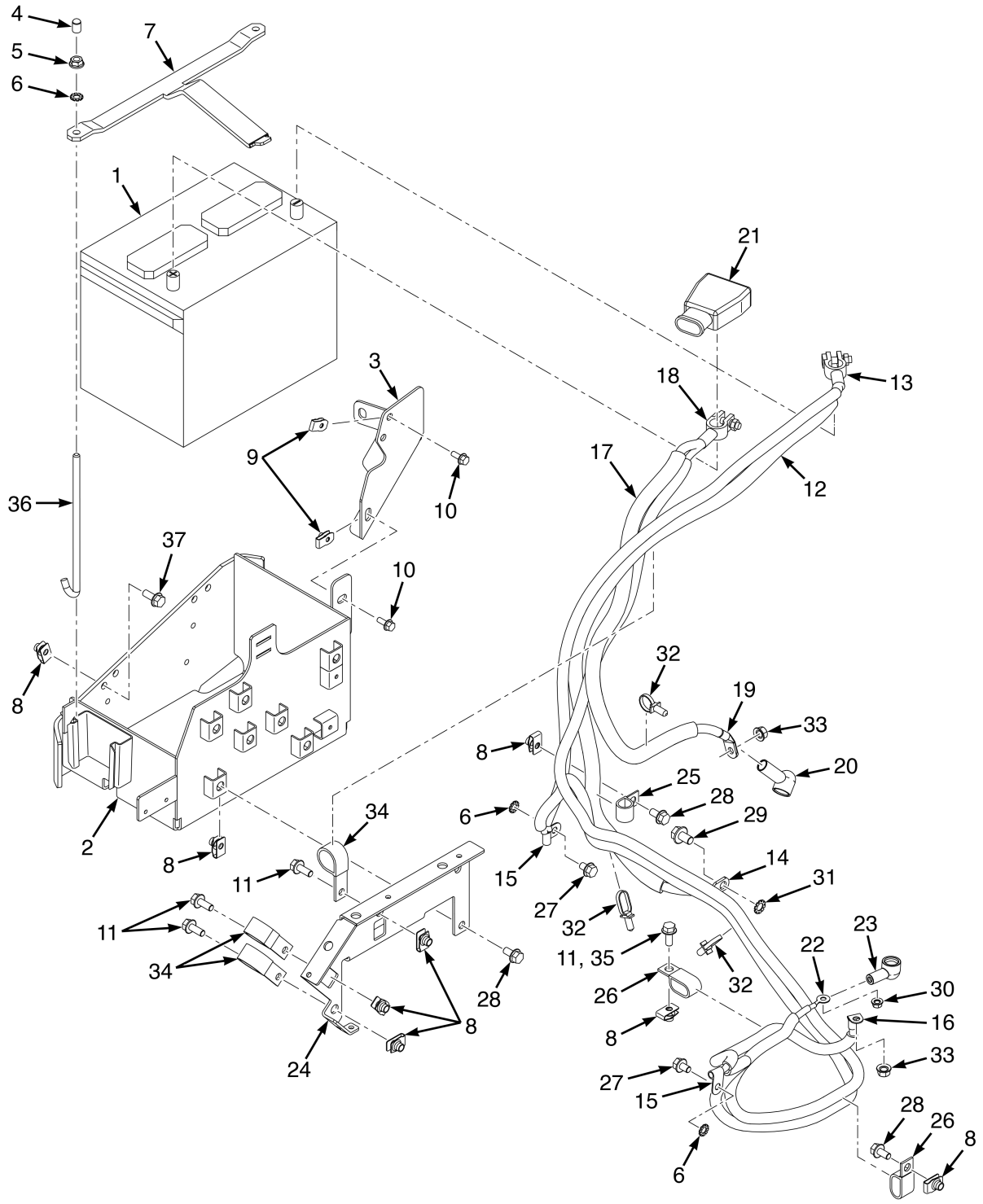

©2026 HYSTER COMPANY

12V BATTERY ARRANGEMENT

2.2L LPG AND 3.0 AND 3.3L DIESEL (4/2021 →)

KEY:
A: LPG
B: DSL

ITEM	PART NO.	DESCRIPTION	QTY A	QTY B
1	1643935	Start Battery Wet	1	..
1	1383331	Start Battery Wet (Optional)	1	..
1	4371829	Battery (Optional)	1	..
1	4371831	Battery (12V) (Optional)	1	..
1	1643936	Start Battery Wet (High Capacity Starter)	..	1
1	4371830	Battery (Wet, 12V) (Optional)	..	1
2	4247733	Holder - Battery	1	1
2	**a** 4376316	Holder - Battery (Alternate Part)	1	1
3	4273194	Bracket Wldmt - Battery Tray	1	1
4	1540805	Cap	2	2
5	~~1382472~~			
	1502543	Nut	2	2
6	296380	Washer	4	4
7	4259043	Bracket	1	1
8	1480237	Nut (Foldover)	9	10
9	1566420	Nut (Foldover)	4	3
10	~~4111055~~			
	1527876	Capscrew	3	3
11	1527880	Capscrew	3	4
12	4711321	Battery Cable (Negative)	1	1
13	148790	Terminal	1	1
14	4221129	Terminal - Power	1	1
15	203691	Fitting	2	2
16	4696001	Terminal	1	1
17	4711322	Battery Cable (Positive)	1	..
17	4711325	Battery Cable (Positive) (Shown)	..	1
18	148793	Terminal	1	1
19	194362	E-Ring	1	..
19	4290997	Terminal (Power)	..	1
20	4124255	Boot	1	1
21	1529550	Boot	1	1
22	806425	E-Ring	1	1
23	1520864	Boot	1	1
24	~~4279630~~			
	81016243	Bracket Wldmt	1	1
25	4241995	Clamp	1	..
25	128408	Clamp	..	1
26	119074	Clamp	2	2
27	1529366	Capscrew	2	2
28	~~4109993~~			
	1527879	Capscrew	4	4
29	1528778	Capscrew	1	1
30	4295553	Nut	1	1
31	296381	Washer	1	1
32	4140361	Cable Clip	2	3

©2026 HYSTER COMPANY

12V BATTERY ARRANGEMENT

2.2L LPG AND 3.0 AND 3.3L DIESEL (4/2021 →)

KEY:
A: LPG
B: DSL

ITEM	PART NO.	DESCRIPTION	QTY A	QTY B
33	4286499	Nut	2	2
34	140612	Hose Clamp	3	3
35	1527877	Capscrew	1	..
36	4714225	Link (Battery Hold Down)	2	2
37	1527880	Capscrew	2	2
37	1510113	Capscrew (Alternate Part)	2	2
	b c 4085110	Battery Disconnect (Optional) (☞Figure 11-5)	1	1

FOOTNOTES:

a Battery Holder is not compatible with 4315847 Contactor Bracket. Replace Bracket with 4371832.
b Not Illustrated
c Used in conjunction with negative battery cable terminal.

©2026 HYSTER COMPANY

12V BATTERY DISCONNECT (FIGURE 11-5)

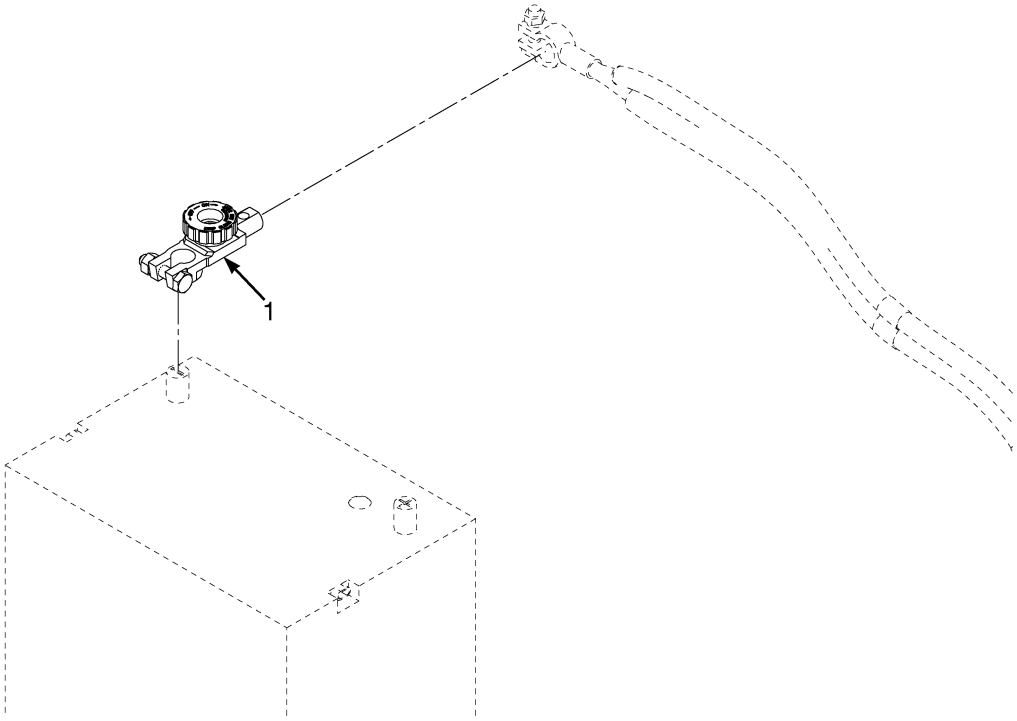

BP084483

ITEM	PART NO.	DESCRIPTION	QTY
1	4085110	Battery Disconnect	1

AMBIENT LIGHT SENSOR (FIGURE 11-6)

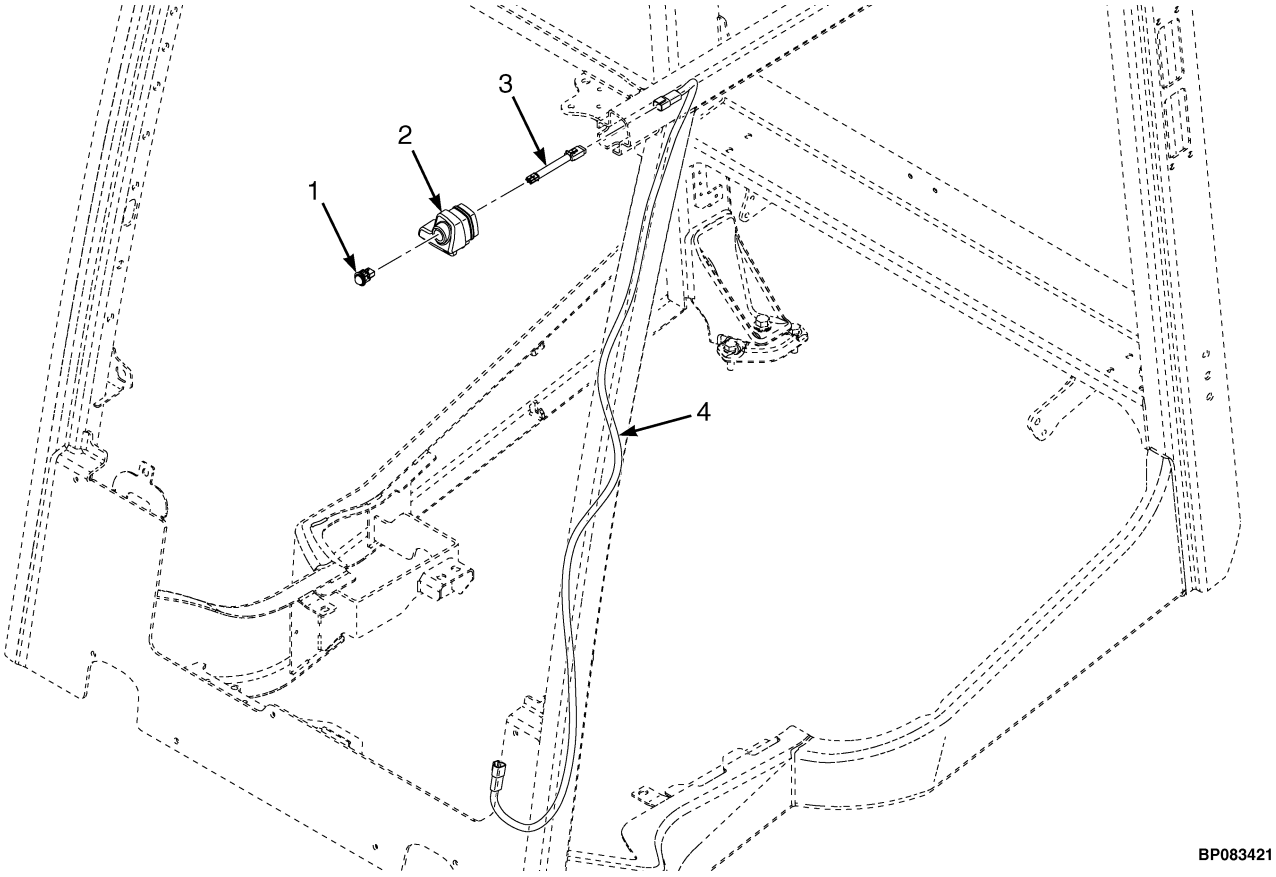

ITEM	PART NO.	DESCRIPTION	QTY
1	4700371	Sensor - Ambient Light	1
2	4698608	Plug - Fig8 OHG with Ambient Light Sensor Installed	1
2	4698609	Plug - Rect OHG with Ambient Light Sensor Installed	1
3	4700372	Wire Harness - Jumper, Ambient Light Sensor	1
4	4700350	Wire Harness - Ambient Light Sensor	1

©2026 HYSTER COMPANY

AUDIBLE ALARM (FIGURE 11-7)

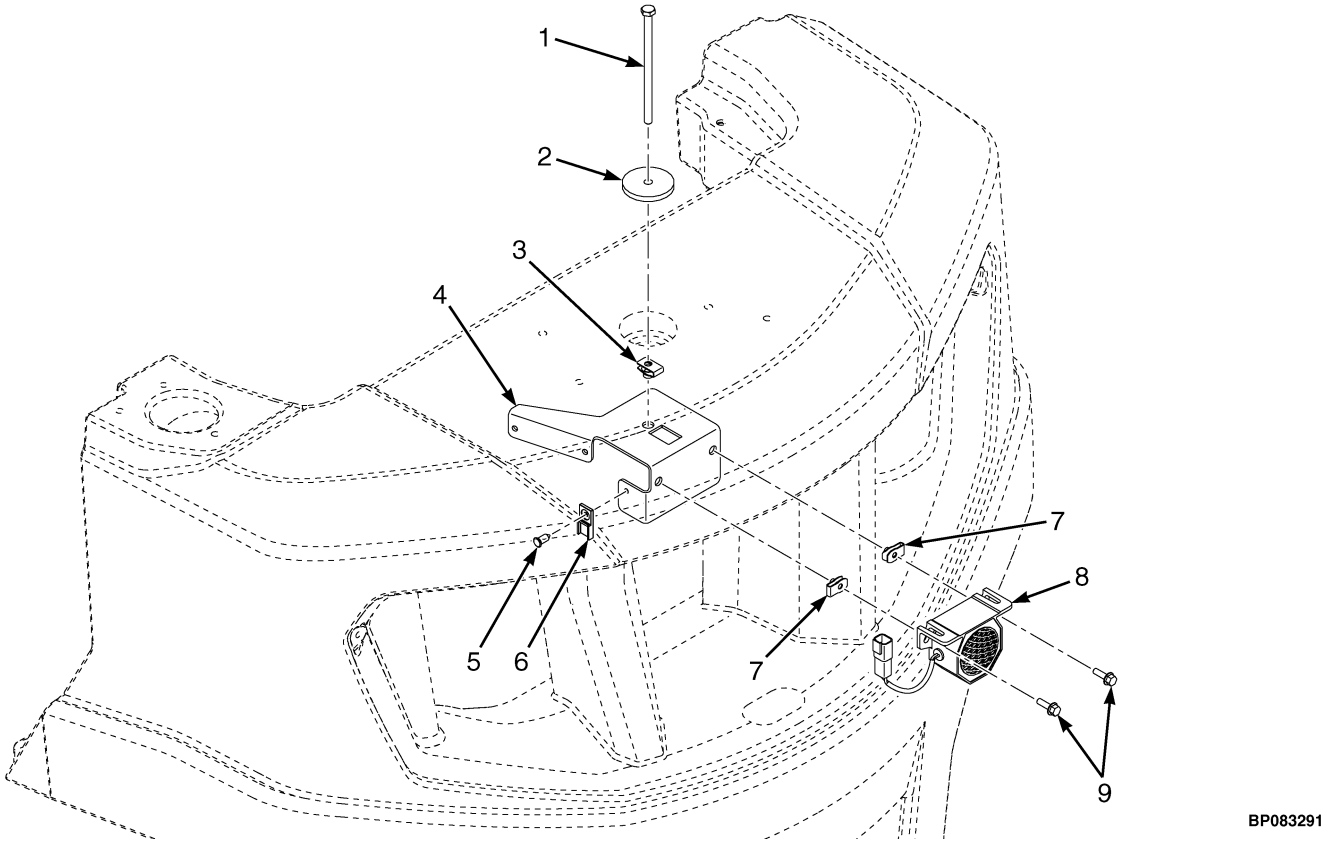

ITEM	PART NO.	DESCRIPTION	QTY
1	4268939	Capscrew	1
2	1547756	Washer	1
3	1480237	Nut (Foldover)	1
4	4321096	Bracket	1
5	1582464	Fastener	1
6	1500912	Clip	1
7	1566420	Nut (Foldover)	2
8	4698154	Alarm (Audible)	1
9	1527877	Capscrew	2

BATTERY CABLES (FIGURE 11-8)
W/ POSITIVE AND OR NEGATIVE DISCONNECT — 2.1L DIESEL

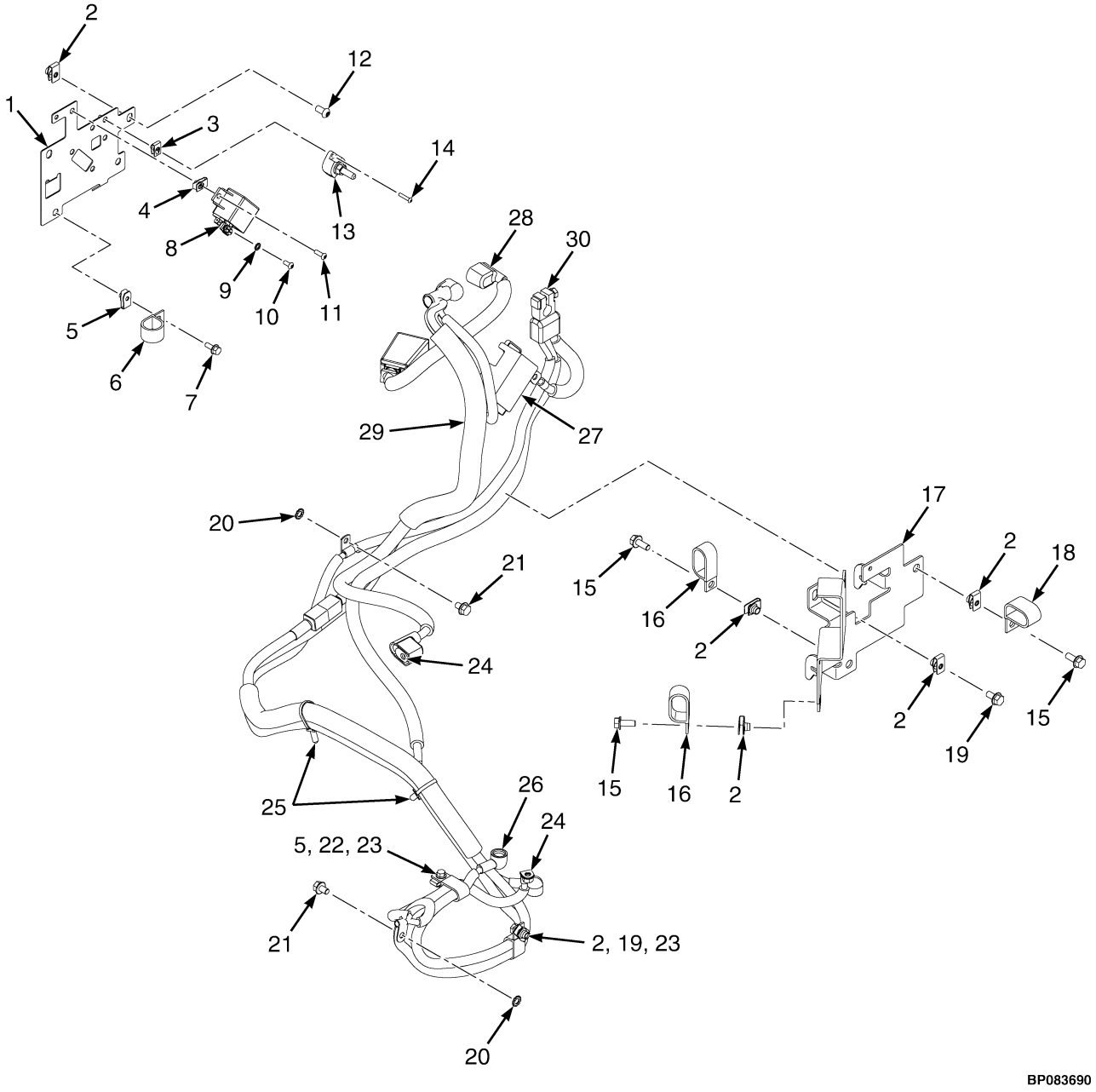

©2026 HYSTER COMPANY

BATTERY CABLES

W/ POSITIVE AND OR NEGATIVE DISCONNECT – 2.1L DIESEL

KEY:
A: w/ Contactor, w/ positive and negative disconnect
B: w/ Contactor, w/ negative disconnect
C: w/ positive and negative disconnect
D: w/ negative disconnect

ITEM	PART NO.	DESCRIPTION	QTY A	QTY B	QTY C	QTY D
1	4318458	Bracket	1	1	1	1
1	**a** 4371655	Bracket (Alternate Part)	1	1	1	1
2	1480237	Nut (Foldover)	7	7	7	7
3	1537551	Nut (Clip)	2	2	..	..
4	4019192	Clip , Nut	2	2	..	..
5	1566420	Nut (Foldover)	3	3	3	3
6	178119	Clamp	2	2	2	2
7	~~4111055~~					
	1527876	Capscrew	2	2	2	2
8	4284399	Relay (High Current 75 Amp)	1	1	..	..
9	296378	Washer	2	2	..	..
10	4315811	Screw	2	2	..	..
11	4312482	Screw	2	2	..	..
12	4120965	Screw	2	2	2	2
13	4115008	Terminal Post	1	1	..	..
14	4021996	Screw	2	2	..	..
15	1527880	Capscrew	3	3	3	3
16	129684	Clamp	2	2	2	2
17	4327687	Bracket , Battery Cable	1	1	..	..
17	4351723	Bracket , Battery Cable (Alternate Part)	1	1	..	..
17	4249125	Bracket	..	..	1	1
17	4351722	Bracket , Battery Cable (Alternate Part)	..	..	1	1
18	4241995	Clamp	1	1	1	1
19	~~4109993~~					
	1527879	Capscrew	2	2	2	2
20	296380	Washer	2	2	2	2
21	1529366	Capscrew	2	2	2	2
22	1527877	Capscrew	1	1	1	1
23	119074	Clamp	1	1	1	1
24	4286499	Nut	2	2	2	2
25	4140361	Cable Clip	2	2	2	2
26	4295553	Nut	1	1	1	1
27	4319909	Boot (Relay)	1	1	..	..
28	4702208	Battery Cable (Positive)	1	..	1	..
29	4711334	Battery Cable (Positive)	1	..	..	..
29	4711329	Battery Cable (Positive)	..	1	..	..
29	4711332	Battery Cable (Positive)	..	..	1	..
29	4711324	Battery Cable (Positive)	..	..	..	1
30	4714849	Battery Cable (Negative)	1	1	..	..
30	4714848	Battery Cable (Negative)	..	..	1	1

FOOTNOTES:

a Bracket is not compatible with 4247733 Battery Holder. Replace Battery Holder with 4376316.

©2026 HYSTER COMPANY

NOTES

BATTERY CABLES (FIGURE 11-9)

TYPE S CABLES — 2.1L DIESEL (→ 4/2021)

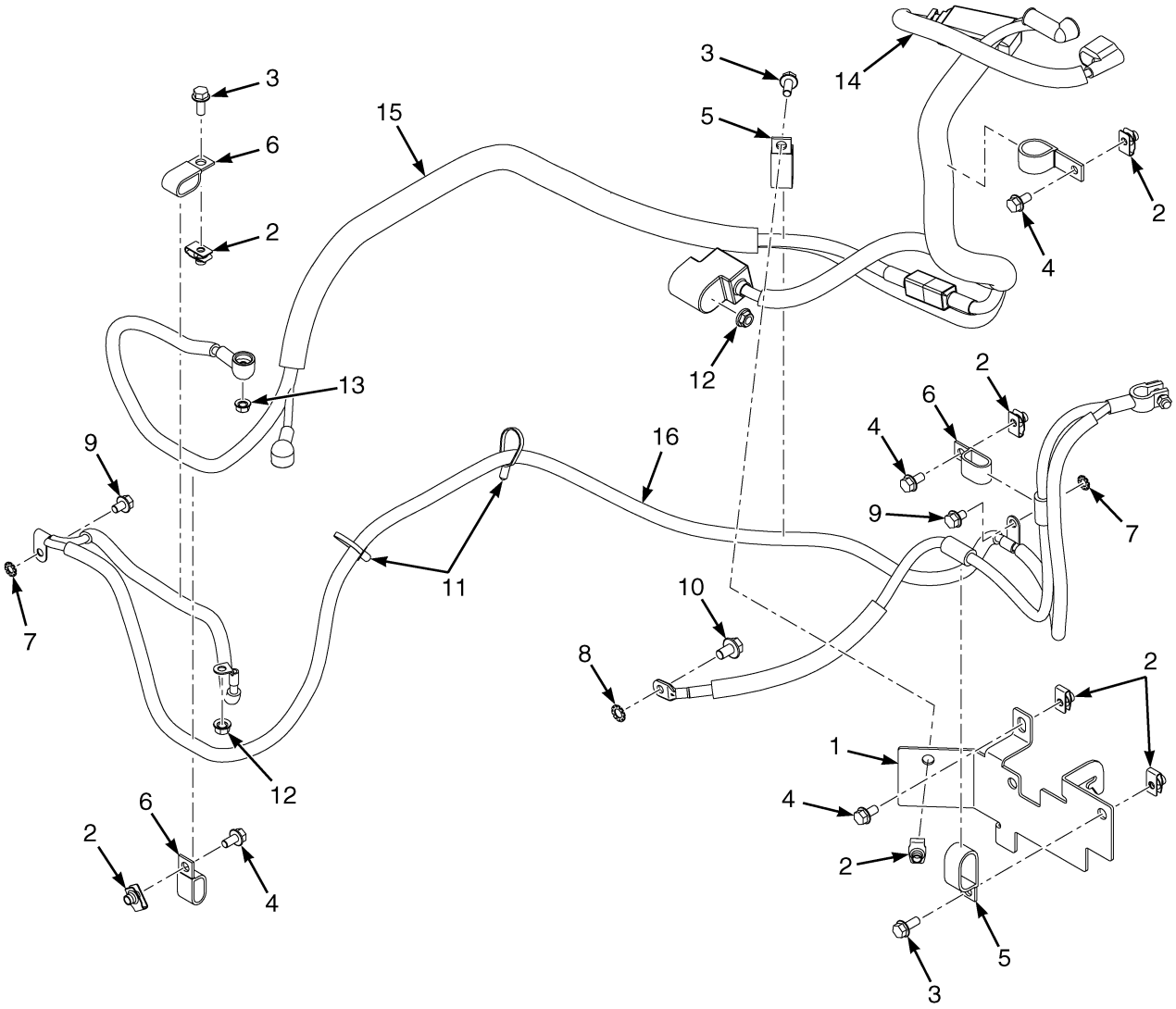

BP083431

©2026 HYSTER COMPANY

BATTERY CABLES

TYPE S CABLES – 2.1L DIESEL (→ 4/2021)

ITEM	PART NO.	DESCRIPTION	QTY
1	4249125	Bracket	1
2	1480237	Nut (Foldover)	9
3	1527880	Capscrew	4
4	~~4109993~~		
	1527879	Capscrew	5
5	129684	Clamp	4
6	119074	Clamp	3
7	296380	Washer	2
8	296381	Washer	1
9	1529366	Capscrew	2
10	1528778	Capscrew	1
11	4140361	Cable Clip	2
12	4286499	Nut	2
13	4295553	Nut	1
14	4702208	Battery Cable (Positive)	1
15	4702626	Battery Cable (Positive)	1
16	4699870	Battery Cable - Negative	1

©2026 HYSTER COMPANY

BATTERY CABLES AND CONTACTOR (FIGURE 11-10)

YANMAR 2.2 LPG/GAS

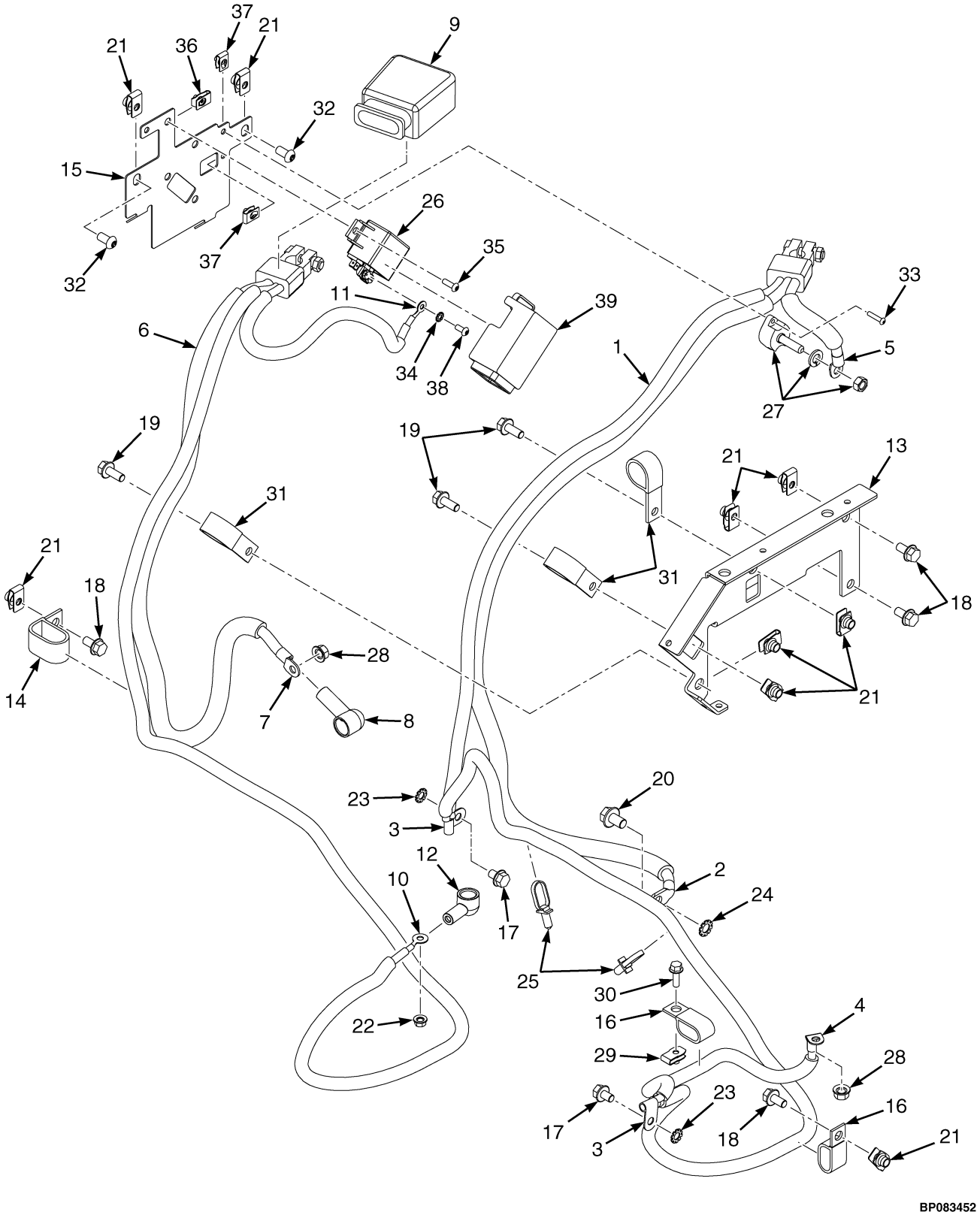

©2026 HYSTER COMPANY

BATTERY CABLES AND CONTACTOR

YANMAR 2.2 LPG/GAS

ITEM	PART NO.	DESCRIPTION	QTY
1	~~4699872~~		
	4711326	Battery Cable (Negative)	1
2	4221129	Terminal - Power	1
3	203691	Fitting	2
4	4696001	Terminal	1
5	194362	E-Ring	1
6	4711327	Battery Cable (Positive)	1
7	194362	E-Ring	1
8	4124255	Boot	1
9	1536304	Boot	1
10	806425	E-Ring	1
11	806424	E-Ring	1
12	1520864	Boot	1
13	~~4279630~~		
	81016243	Bracket Wldmt	1
14	4241995	Clamp	1
15	4315847	Bracket (Contactor LPG/IDI)	1
15	**a** 4371832	Bracket (Alternate Part)	1
16	119074	Clamp	2
17	1529366	Capscrew	2
18	~~4109993~~		
	1527879	Capscrew	4
19	1527880	Capscrew	3
20	1528778	Capscrew	1
21	1480237	Nut (Foldover)	9
22	4295553	Nut	1
23	296380	Washer	2
24	296381	Washer	1
25	4140361	Cable Clip	2
26	4284399	Relay (High Current 75 Amp)	1
27	4115008	Terminal Post	1
28	4286499	Nut	2
29	1566420	Nut (Foldover)	1
30	1527877	Capscrew	1
31	140612	Hose Clamp	3
32	4120965	Screw	2
33	4021996	Screw	2
34	4315811	Screw	2
35	4312482	Screw	2
36	4019192	Clip , Nut	2
37	1537551	Nut (Clip)	2
38	296378	Washer	2
39	4319909	Boot (Relay)	1

FOOTNOTES:

a Bracket is not compatible with 4247733 Battery Holder. Replace Battery Holder with 4376316.

BATTERY CABLES AND CONTACTOR (FIGURE 11-11)

YANMAR 2.2 LPG/GAS — ALTERNATE ARRANGEMENT

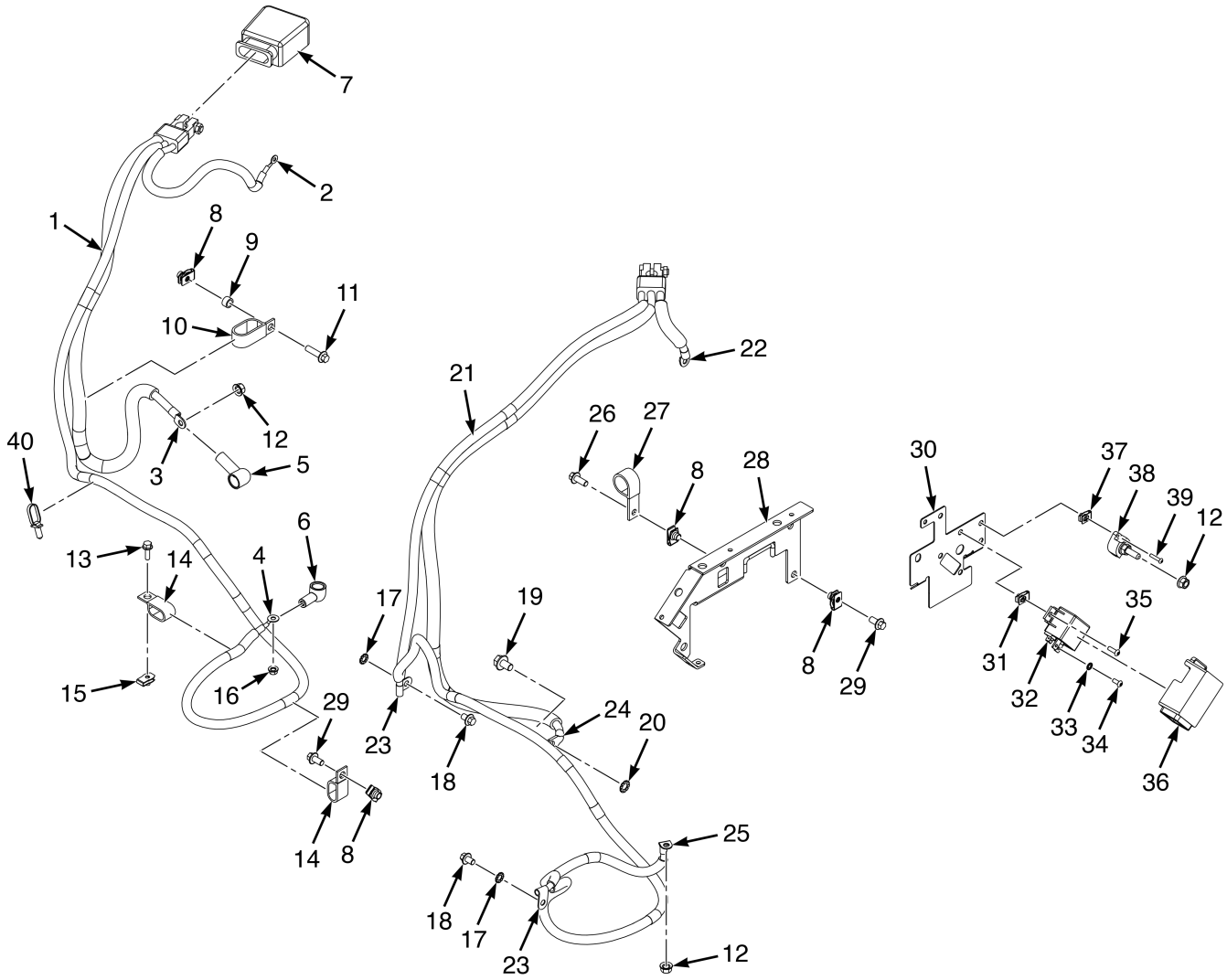

BP085074

©2026 HYSTER COMPANY

BATTERY CABLES AND CONTACTOR

YANMAR 2.2 LPG/GAS – ALTERNATE ARRANGEMENT

ITEM	PART NO.	DESCRIPTION	QTY
1	4711327	Battery Cable (Positive)	1
2	806424	E-Ring	1
3	194362	E-Ring	1
4	806425	E-Ring	1
5	4124255	Boot	1
6	1520864	Boot	1
7	1536304	Boot	1
8	1480237	Nut (Foldover)	8
9	81058852	Spacer	1
9	4307108	Spacer (Alternate Part)	1
10	129684	Clamp	1
11	1527881	Capscrew	1
12	4286499	Nut	3
13	1527877	Capscrew	1
14	119074	Clamp	2
15	1566420	Nut (Foldover)	1
16	4295553	Nut	1
17	296380	Washer	2
18	1529366	Capscrew	2
19	1528778	Capscrew	1
20	296381	Washer	1
21	~~4699872~~		
	4711326	Battery Cable (Negative)	1
22	194362	E-Ring	1
23	203691	Fitting	2
24	4221129	Terminal - Power	1
25	4696001	Terminal	1
26	1527880	Capscrew	3
27	140612	Hose Clamp	3
28	~~4279630~~		
	81016243	Bracket Wldmt	1
29	~~4109993~~		
	1527879	Capscrew	4
30	4371832	Bracket	1
31	4019192	Clip , Nut	2
32	4284399	Relay (High Current 75 Amp)	1
33	296378	Washer	2
34	4315811	Screw	2
35	4312482	Screw	2
36	4319909	Boot (Relay)	1
37	1537551	Nut (Clip)	2
39	4021996	Screw	2
40	4140361	Cable Clip	2

BATTERY CABLES AND CONTACTOR (FIGURE 11-12)

YANMAR 2.1 DIESEL

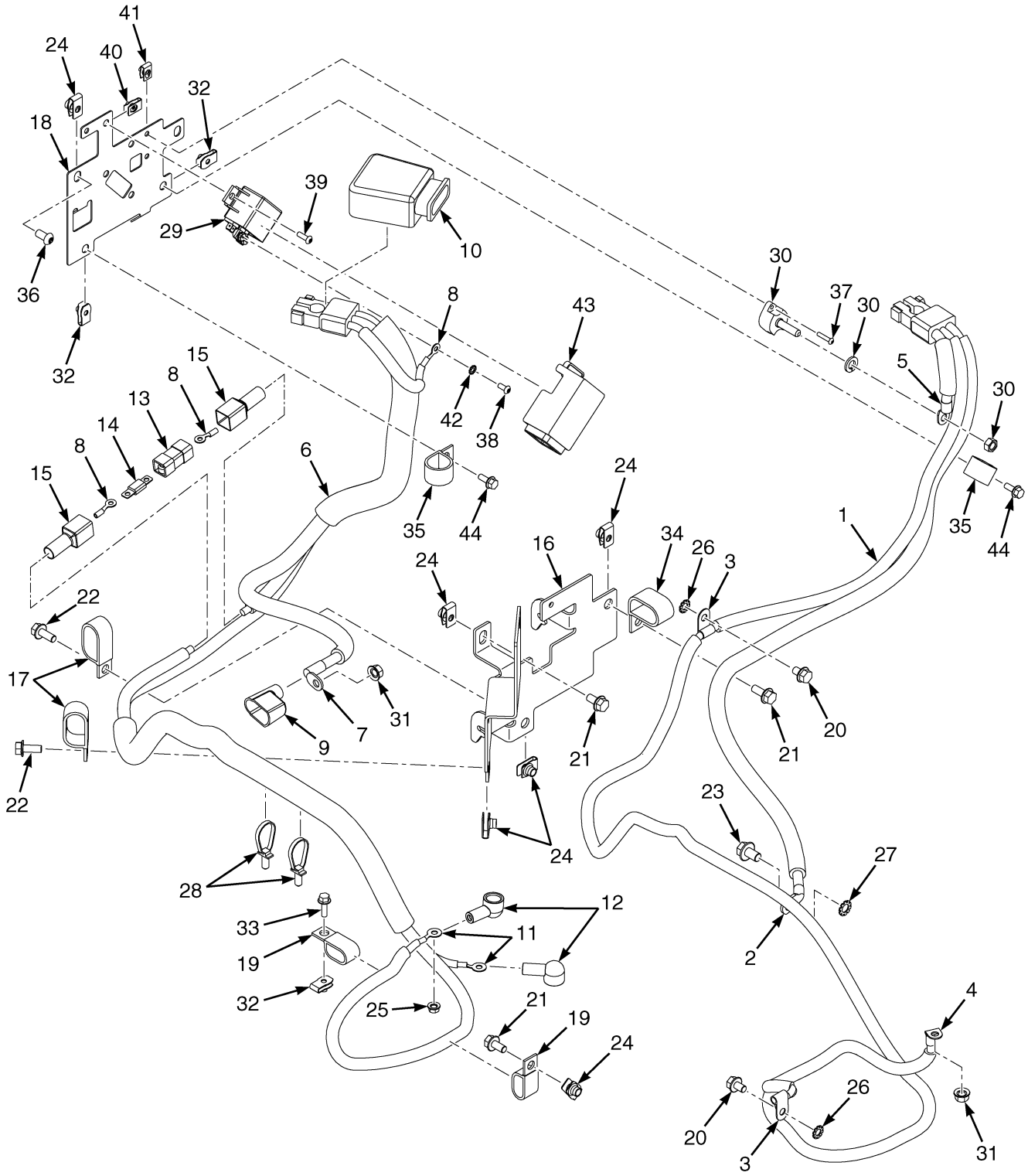

BP083454

©2026 HYSTER COMPANY

BATTERY CABLES AND CONTACTOR

YANMAR 2.1 DIESEL

ITEM	PART NO.	DESCRIPTION	QTY
1	4711328	Battery Cable (Negative)	1
2	4221129	Terminal - Power	1
3	203691	Fitting	2
4	4696001	Terminal	1
5	194362	E-Ring	1
6	4711329	Battery Cable (Positive)	1
7	4296734	Terminal	1
8	806424	E-Ring	3
9	4320004	Boot	1
10	1536304	Boot	1
11	806425	E-Ring	2
12	1520864	Boot	2
13	4695999	Fuse Holder	1
14	4707988	Fuse	1
15	4286097	Boot	2
16	**b** 4318210	Bracket (Battery Cable)	1
16	**c** 4327687	Bracket , Battery Cable	1
16	**d** 4351723	Bracket , Battery Cable	1
17	129684	Clamp	2
18	4318458	Bracket	1
18	**a** 4371655	Bracket (Alternate Part)	1
19	119074	Clamp	2
20	1529366	Capscrew	2
21	~~4109993~~		
	1527879	Capscrew	2
22	1527880	Capscrew	3
23	1528778	Capscrew	1
24	1480237	Nut (Foldover)	7
25	4295553	Nut	1
26	296380	Washer	2
27	296381	Washer	1
28	4140361	Cable Clip	2
29	4284399	Relay (High Current 75 Amp)	1
30	4115008	Terminal Post	1
31	4286499	Nut	2
32	1566420	Nut (Foldover)	3
33	1527877	Capscrew	1
34	4241995	Clamp	1
35	178119	Clamp	2
36	4120965	Screw	2
37	4021996	Screw	2
38	4315811	Screw	2
39	4312482	Screw	2
40	4019192	Clip , Nut	2
41	1537551	Nut (Clip)	2
42	296378	Washer	2
43	4319909	Boot (Relay)	1
44	~~4111055~~		
	1527876	Capscrew	2

FOOTNOTES:

a Bracket is not compatible with 4247733 Battery Holder. Replace Battery Holder with 4376316.

b → 8/2021

c 8/2021 ↔ 8/2022

d 8/2022 →

©2026 HYSTER COMPANY

NOTES

BATTERY CABLES AND CONTACTOR (FIGURE 11-13)

YANMAR 3.0 AND 3.3 DIESEL IDI

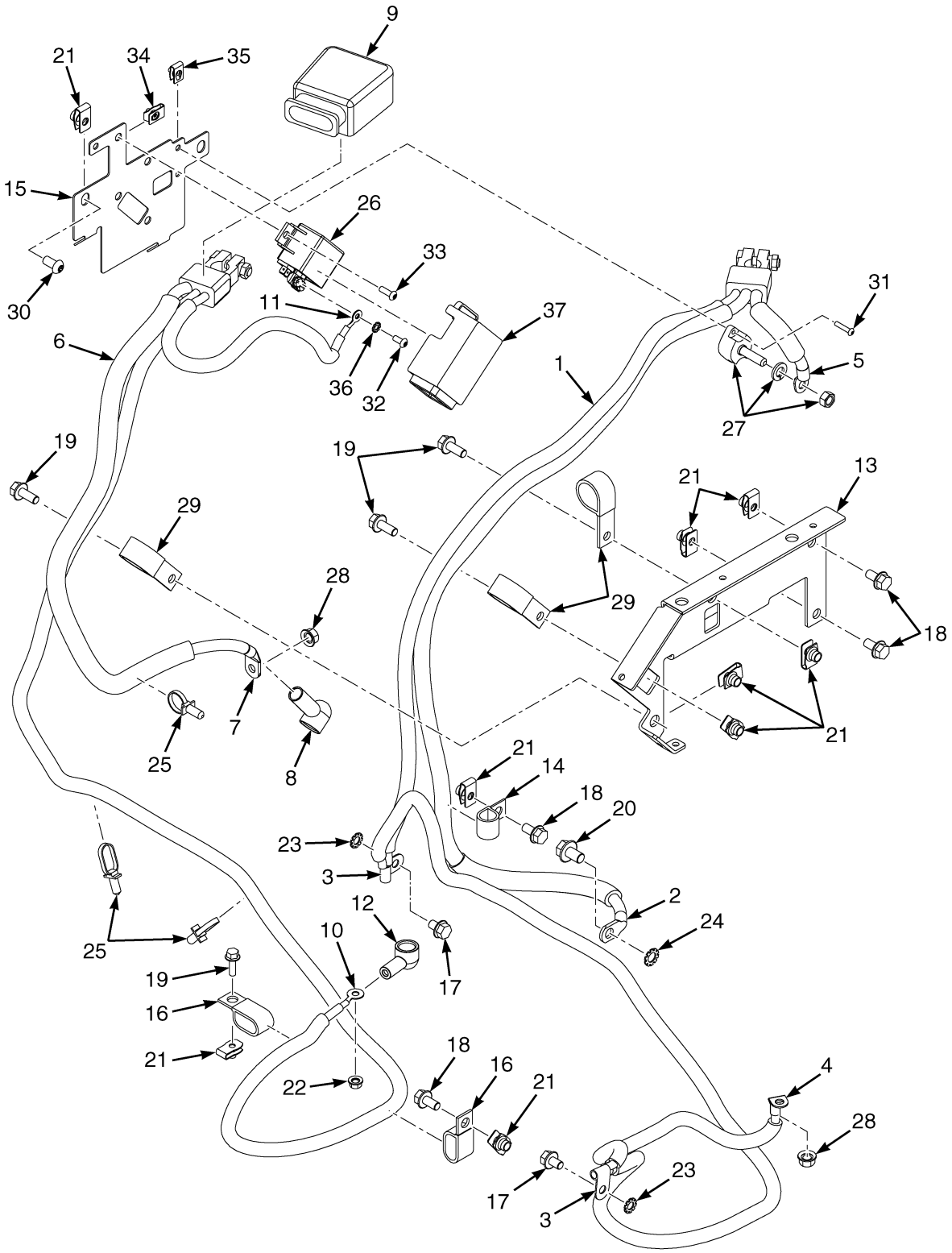

©2026 HYSTER COMPANY

BATTERY CABLES AND CONTACTOR

YANMAR 3.0 AND 3.3 DIESEL IDI

ITEM	PART NO.	DESCRIPTION	QTY
1	~~4699872~~		
	4711326	Battery Cable (Negative)	1
2	4221129	Terminal - Power	1
3	203691	Fitting	2
4	4696001	Terminal	1
5	194362	E-Ring	1
6	4711338	Battery Cable (Positive)	1
7	4290997	Terminal (Power)	1
8	4124255	Boot	1
9	1536304	Boot	1
10	806425	E-Ring	1
11	806424	E-Ring	1
12	1520864	Boot	1
13	~~4279630~~		
	81016243	Bracket Wldmt	1
14	128408	Clamp	1
15	4315847	Bracket (Contactor LPG/IDI)	1
15	**a** 4371832	Bracket (Alternate Part)	1
16	119074	Clamp	2
17	1529366	Capscrew	2
18	~~4109993~~		
	1527879	Capscrew	4
19	1527880	Capscrew	4
20	1528778	Capscrew	1
21	1480237	Nut (Foldover)	10
22	4295553	Nut	1
23	296380	Washer	2
24	296381	Washer	1
25	4140361	Cable Clip	3
26	4284399	Relay (High Current 75 Amp)	1
27	4115008	Terminal Post	1
28	4286499	Nut	2
29	140612	Hose Clamp	3
30	4120965	Screw	2
31	4021996	Screw	2
32	4315811	Screw	2
33	4312482	Screw	2
34	4019192	Clip , Nut	2
35	1537551	Nut (Clip)	2
36	296378	Washer	2
37	4319909	Boot (Relay)	1

FOOTNOTES:

a Bracket is not compatible with 4247733 Battery Holder. Replace Battery Holder with 4376316.

BATTERY CABLES AND CONTACTOR (FIGURE 11-14)

YANMAR 2.1 DIESEL — TYPE S

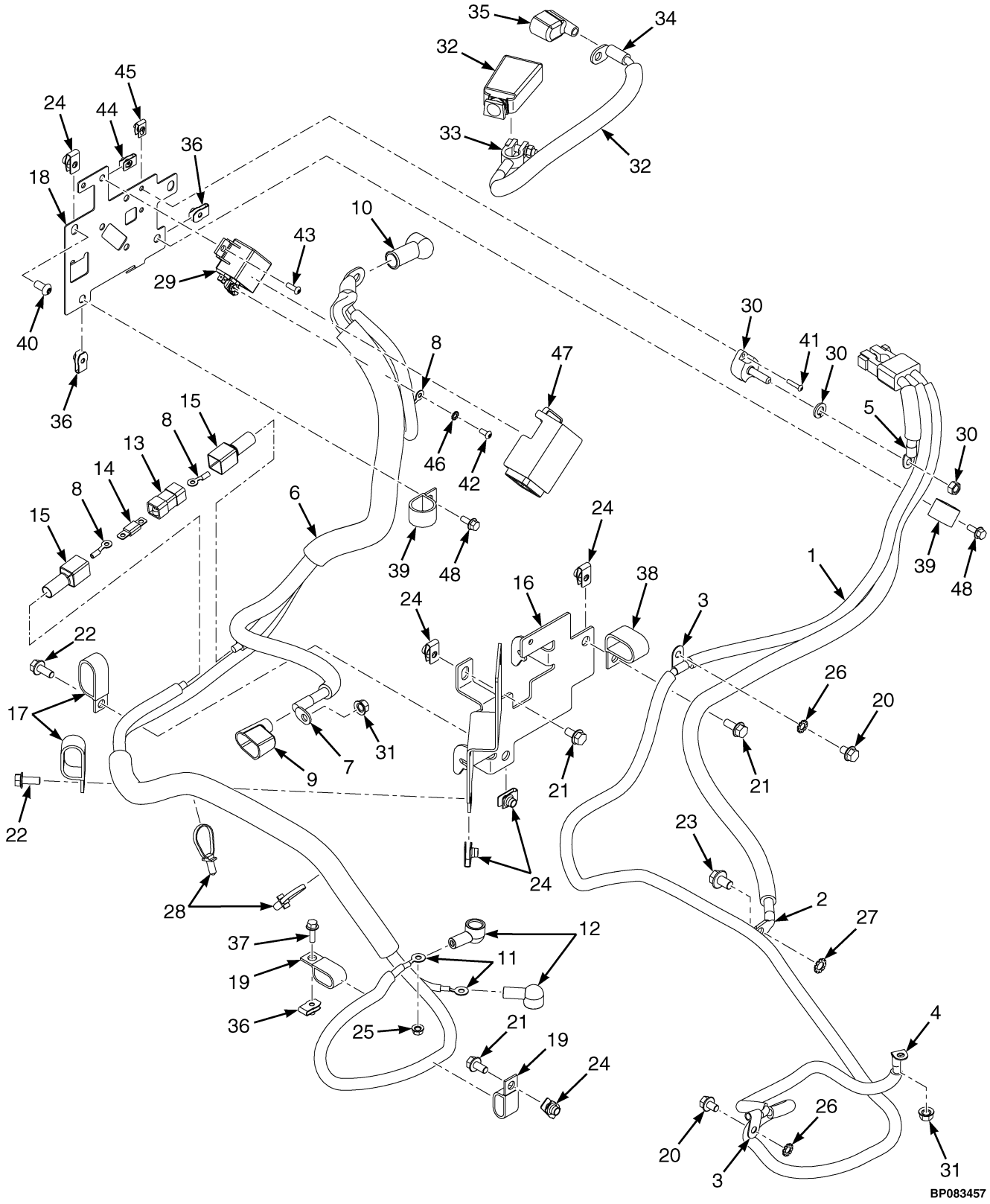

©2026 HYSTER COMPANY

BATTERY CABLES AND CONTACTOR

YANMAR 2.1 DIESEL – TYPE S

ITEM	PART NO.	DESCRIPTION	QTY
1	4711328	Battery Cable (Negative)	1
2	4221129	Terminal - Power	1
3	203691	Fitting	2
4	4696001	Terminal	1
5	194362	E-Ring	1
6	4711334	Battery Cable (Positive)	1
7	4296734	Terminal	1
8	806424	E-Ring	3
9	4320004	Boot	1
10	4136748	Boot	1
11	806425	E-Ring	2
12	1520864	Boot	2
13	4695999	Fuse Holder	1
14	4707988	Fuse	1
15	4286097	Boot	2
16	4318210	Bracket (Battery Cable)	1
17	129684	Clamp	2
18	4318458	Bracket	1
18	**a** 4371655	Bracket (Alternate Part)	1
19	119074	Clamp	2
20	1529366	Capscrew	2
21	~~4109993~~		
	1527879	Capscrew	2
22	1527880	Capscrew	3
23	1528778	Capscrew	1
24	1480237	Nut (Foldover)	7
25	4295553	Nut	1
26	296380	Washer	2
27	296381	Washer	1
28	4140361	Cable Clip	2
29	4284399	Relay (High Current 75 Amp)	1
30	4115008	Terminal Post	1
31	4286499	Nut	2
32	4702208	Battery Cable (Positive)	1
32	. . . . .	Boot	1
33	148791	Terminal	1
34	4296231	Terminal	1
35	4262743	Boot	1
35	4320004	Boot (Alternate Part)	1
36	1566420	Nut (Foldover)	3
37	1527877	Capscrew	1
38	4241995	Clamp	1
39	178119	Clamp	2
40	4120965	Screw	2
41	4021996	Screw	2
42	4315811	Screw	2
43	4312482	Screw	2
44	4019192	Clip , Nut	2
45	1537551	Nut (Clip)	2
46	296378	Washer	2

BATTERY CABLES AND CONTACTOR

YANMAR 2.1 DIESEL – TYPE S

ITEM	PART NO.	DESCRIPTION	QTY
47	4319909	Boot (Relay)	1
48	~~4111055~~		
	1527876	Capscrew	1

FOOTNOTES:

a Bracket is not compatible with 4247733 Battery Holder. Replace Battery Holder with 4376316.

©2026 HYSTER COMPANY

NOTES

BATTERY CABLES AND CONTACTOR (FIGURE 11-15)

YANMAR LPG/GAS — TYPE S

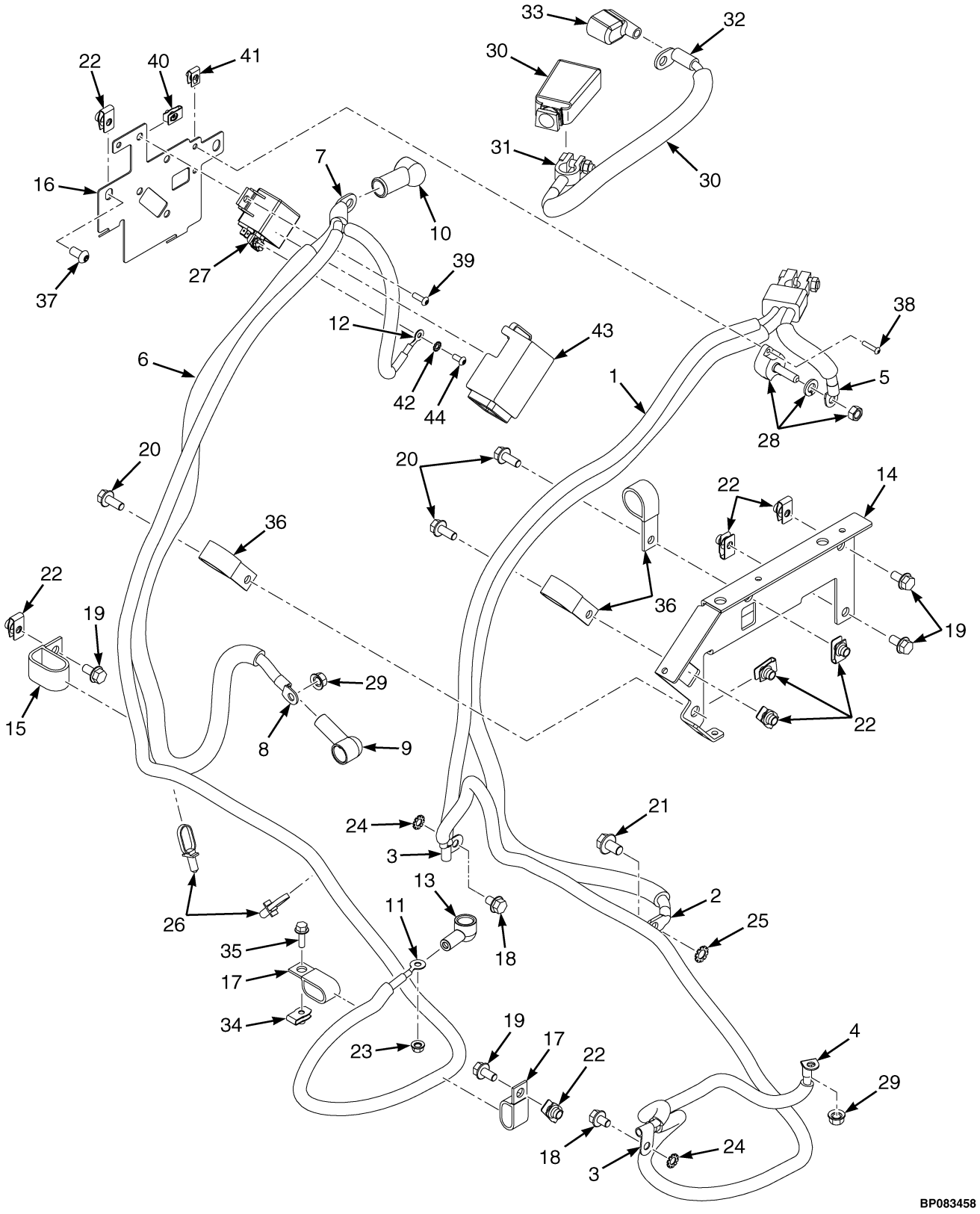

©2026 HYSTER COMPANY

BATTERY CABLES AND CONTACTOR

YANMAR LPG/GAS – TYPE S

ITEM	PART NO.	DESCRIPTION	QTY
1	~~4699872~~		
	4711326	Battery Cable (Negative)	1
2	4221129	Terminal - Power	1
3	203691	Fitting	2
4	4696001	Terminal	1
5	194362	E-Ring	1
6	4711335	Battery Cable (Positive)	1
7	1520490	Terminal	1
8	194362	E-Ring	1
9	4124255	Boot	1
10	4136748	Boot	1
11	806425	E-Ring	1
12	806424	E-Ring	1
13	1520864	Boot	1
14	~~4279630~~		
	81016243	Bracket Wldmt	1
15	4241995	Clamp	1
16	4315847	Bracket (Contactor LPG/IDI)	1
16	**a** 4371832	Bracket (Alternate Part)	1
17	119074	Clamp	2
18	1529366	Capscrew	2
19	~~4109993~~		
	1527879	Capscrew	4
20	1527880	Capscrew	3
21	1528778	Capscrew	1
22	1480237	Nut (Foldover)	9
23	4295553	Nut	1
24	296380	Washer	2
25	296381	Washer	1
26	4140361	Cable Clip	2
27	4284399	Relay (High Current 75 Amp)	1
28	4115008	Terminal Post	1
29	4286499	Nut	2
30	4702208	Battery Cable (Positive)	1
30	. . . . .	Boot	1
31	148791	Terminal	1
32	4296231	Terminal	1
33	4262743	Boot	1
33	4320004	Boot (Alternate Part)	1
34	1566420	Nut (Foldover)	1
35	1527877	Capscrew	1
36	140612	Hose Clamp	3
37	4120965	Screw	2
38	4021996	Screw	2
39	4312482	Screw	2
40	4019192	Clip , Nut	2
41	1537551	Nut (Clip)	2
42	296378	Washer	2
43	4319909	Boot (Relay)	1
44	4315811	Screw	2

BATTERY CABLES AND CONTACTOR

YANMAR LPG/GAS – TYPE S

ITEM	PART NO.	DESCRIPTION	QTY

FOOTNOTES:

a Bracket is not compatible with 4247733 Battery Holder. Replace Battery Holder with 4376316.

©2026 HYSTER COMPANY

NOTES

BATTERY CABLES AND CONTACTOR (FIGURE 11-16)

YANMAR DIESEL IDI — TYPE S

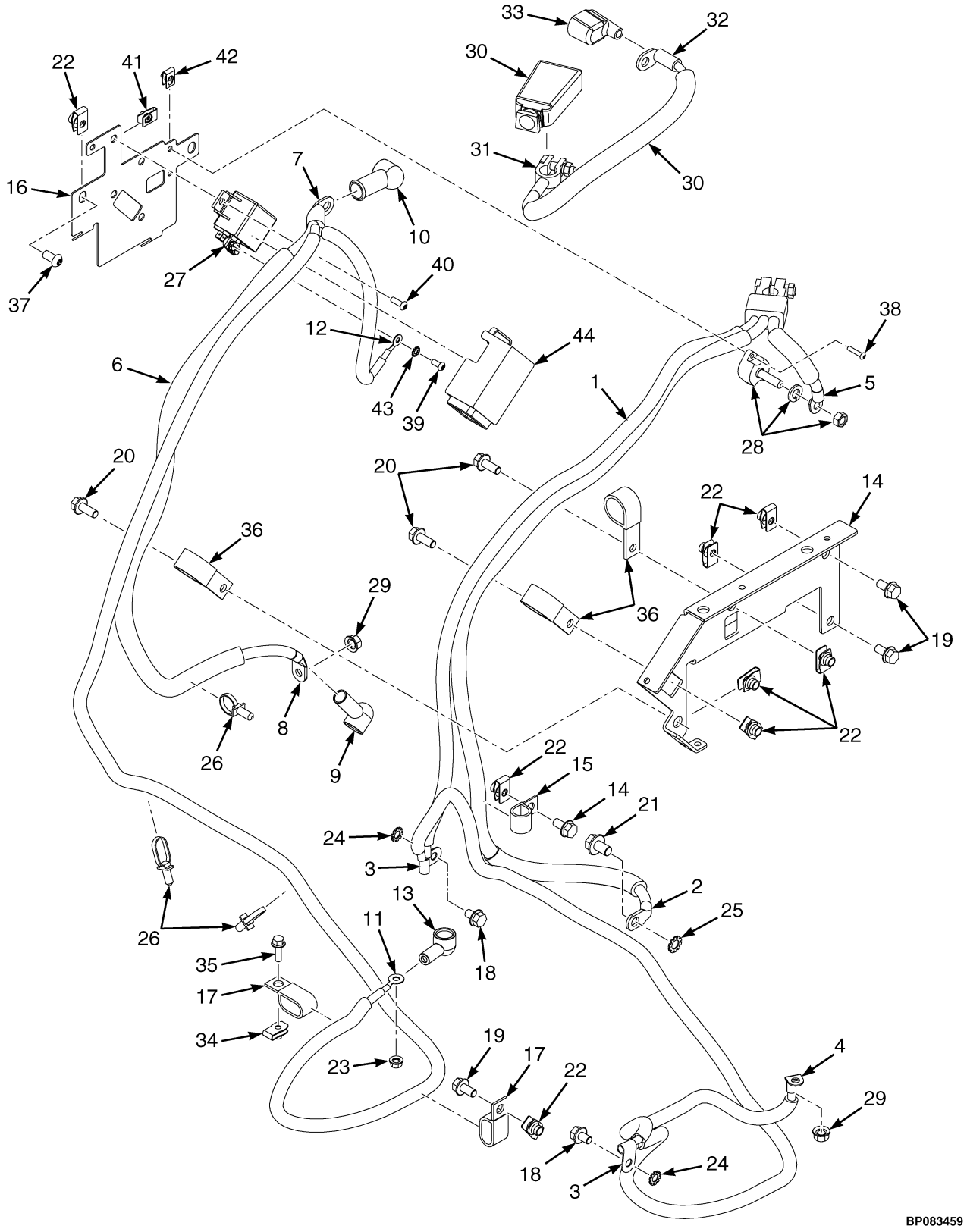

©2026 HYSTER COMPANY

BATTERY CABLES AND CONTACTOR

YANMAR DIESEL IDI – TYPE S

ITEM	PART NO.	DESCRIPTION	QTY
1	~~4699872~~		
	4711326	Battery Cable (Negative)	1
2	4221129	Terminal - Power	1
3	203691	Fitting	2
4	4696001	Terminal	1
5	194362	E-Ring	1
6	4711336	Battery Cable (Positive)	1
7	1520490	Terminal	1
8	4290997	Terminal (Power)	1
9	4124255	Boot	1
10	4136748	Boot	1
11	806425	E-Ring	1
12	806424	E-Ring	1
13	1520864	Boot	1
14	~~4279630~~		
	81016243	Bracket Wldmt	1
15	128408	Clamp	1
16	4315847	Bracket (Contactor LPG/IDI)	1
16	**a** 4371832	Bracket (Alternate Part)	1
17	119074	Clamp	2
18	1529366	Capscrew	2
19	~~4109993~~		
	1527879	Capscrew	4
20	1527880	Capscrew	3
21	1528778	Capscrew	1
22	1480237	Nut (Foldover)	9
23	4295553	Nut	1
24	296380	Washer	2
25	296381	Washer	1
26	4140361	Cable Clip	3
27	4284399	Relay (High Current 75 Amp)	1
28	4115008	Terminal Post	1
29	4286499	Nut	2
30	4702208	Battery Cable (Positive)	1
30	. . . . .	Boot	1
31	148791	Terminal	1
32	4296231	Terminal	1
33	4262743	Boot	1
33	4320004	Boot (Alternate Part)	1
34	1566420	Nut (Foldover)	1
35	1527877	Capscrew	1
36	140612	Hose Clamp	3
37	4120965	Screw	2
38	4021996	Screw	2
39	4315811	Screw	2
40	4312482	Screw	2
41	4019192	Clip , Nut	2
42	1537551	Nut (Clip)	2
43	296378	Washer	2
44	4319909	Boot (Relay)	1

©2026 HYSTER COMPANY

BATTERY CABLES AND CONTACTOR

YANMAR DIESEL IDI – TYPE S

ITEM	PART NO.	DESCRIPTION	QTY

FOOTNOTES:

a Bracket is not compatible with 4247733 Battery Holder. Replace Battery Holder with 4376316.

©2026 HYSTER COMPANY

NOTES

BATTERY DISCONNECT SWITCH (FIGURE 11-17)
LOW VOLTAGE AND TYPE S

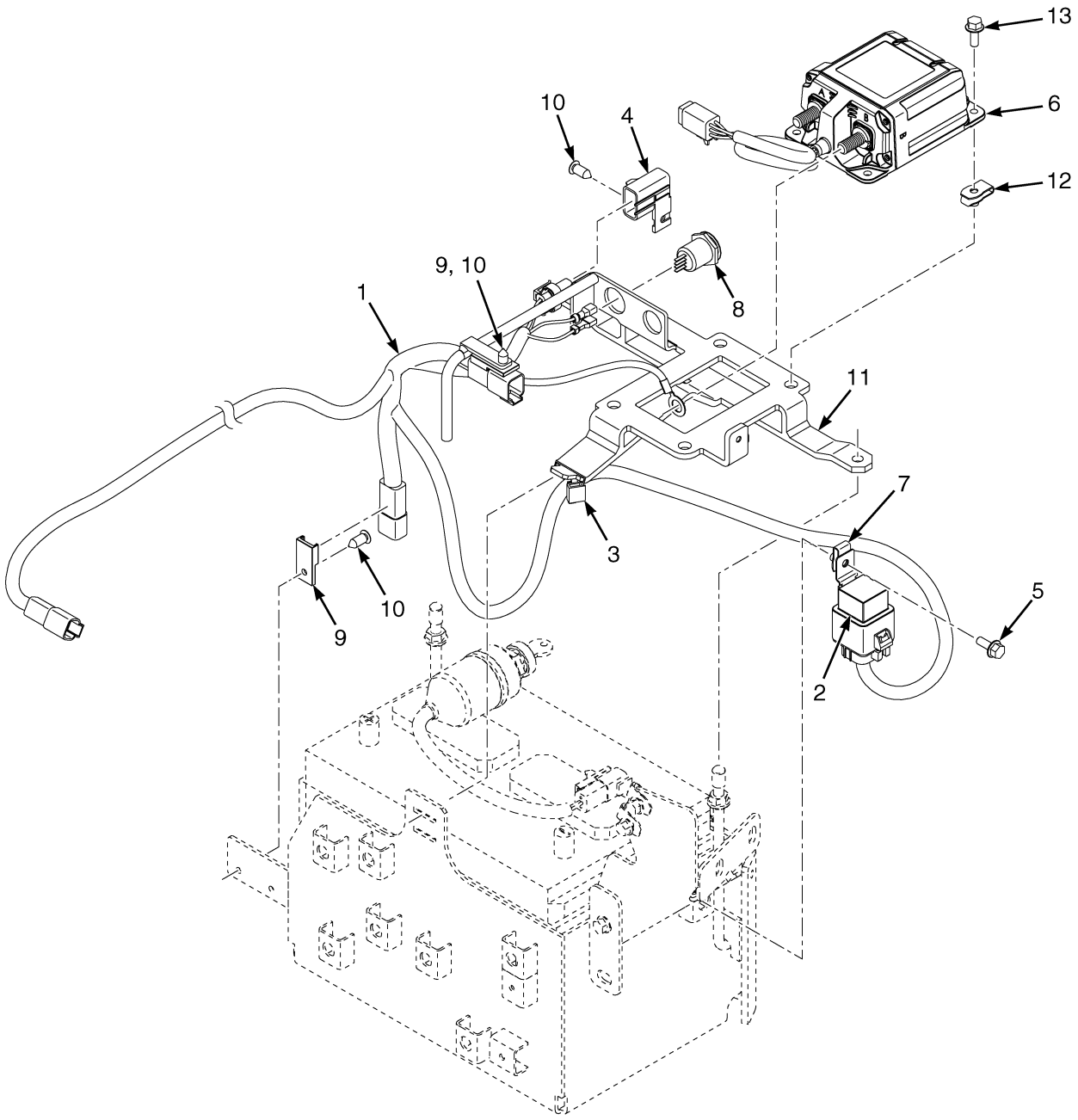

©2026 HYSTER COMPANY

BATTERY DISCONNECT SWITCH
LOW VOLTAGE AND TYPE S

ITEM	PART NO.	DESCRIPTION	QTY
1	4702472	Wire Harness (Type S)	1
1	4702473	Wire Harness (Low Voltage)	1
2	4039364	Relay (Type S Only)	1
3	4276772	Retainer (Type S Only)	1
4	**a** 4294132	Cover	1
5	~~4111055~~		
	1527876	Capscrew	1
6	4294676	Relay (HI Series BI-Stable)	1
7	1566420	Nut (Foldover)	1
8	4701488	Push Button Switch	1
8	4323559	Push Button Switch (Alternate Part)	1
9	1500912	Clip	2
10	1582464	Fastener	3
11	4293164	Battery Hold Down (Battery Disconnect)	1
12	4019192	Clip , Nut	4
13	4328737	Capscrew	4
13	4331950	Capscrew (Alternate Part)	4

FOOTNOTES:

a → 12/2020

©2026 HYSTER COMPANY

CAB HARNESS (FIGURE 11-18)
2.1L DIESEL

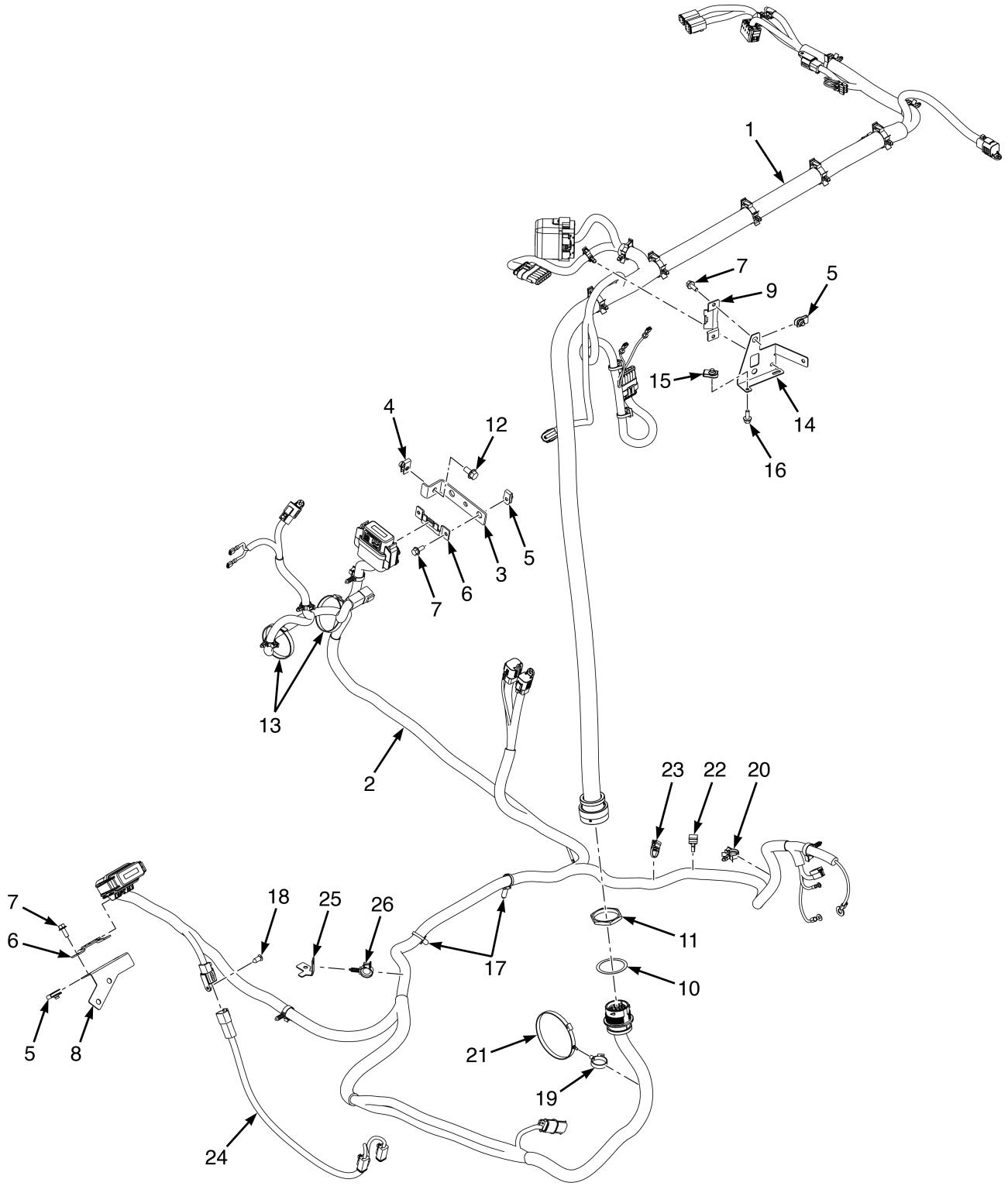

©2026 HYSTER COMPANY

CAB HARNESS
2.1L DIESEL

ITEM	PART NO.	DESCRIPTION	QTY
1	4711710	Wire Harness (Upper) (☞Figure 11-80)	1
2	4711711	Wire Harness (Lower) (☞Figure 11-78)	1
2	4732559	Wire Harness (Cab - Lower) (Alternate Part)	1
3	4275509	Bracket - Cab PDM	1
4	1480237	Nut (Foldover)	1
5	1566420	Nut (Foldover)	6
6	4273394	Bracket - 12 pin PDM	2
7	~~4111055~~		
	1527876	Capscrew	6
8	4293389	Bracket - Cab, PDM Mounting	1
8	4379837	Bracket - Cab, PDM Mounting (Alternate Part)	1
9	4103785	Bracket	1
10	1539086	Lockwasher	1
11	1539085	Panel Nut	1
12	~~4109993~~		
	1527879	Capscrew	1
13	129563	Strap Clamp	2
14	4324369	Bracket (PDM Mounting)	1
14	4377935	Bracket (PDM Mounting) (Alternate Part)	1
15	1683346	Insert	2
15	1566420	Nut (Foldover) (Alternate Part)	2
16	296149	Capscrew	2
16	~~4111055~~		
	1527876	Capscrew (Alternate Part)	2
17	4140361	Cable Clip	2
18	1582464	Fastener	1
19	4074942	Clamp	1
20	1500900	Clip	1
21	1502061	Clamp (Swivel)	1
22	4168707	Retainer	1
23	4280606	Retainer (Cable Tie Clip)	1
24	4701870	Wire Harness - Washer Pump Jumper (☞Figure 11-81)	1
25	81005629	Bracket (Cab Harness)	1
26	1509890	Clip	4

©2026 HYSTER COMPANY

CAB HARNESS (FIGURE 11-19)
2.2L LPG AND 3.0L AND 3.3L DIESEL

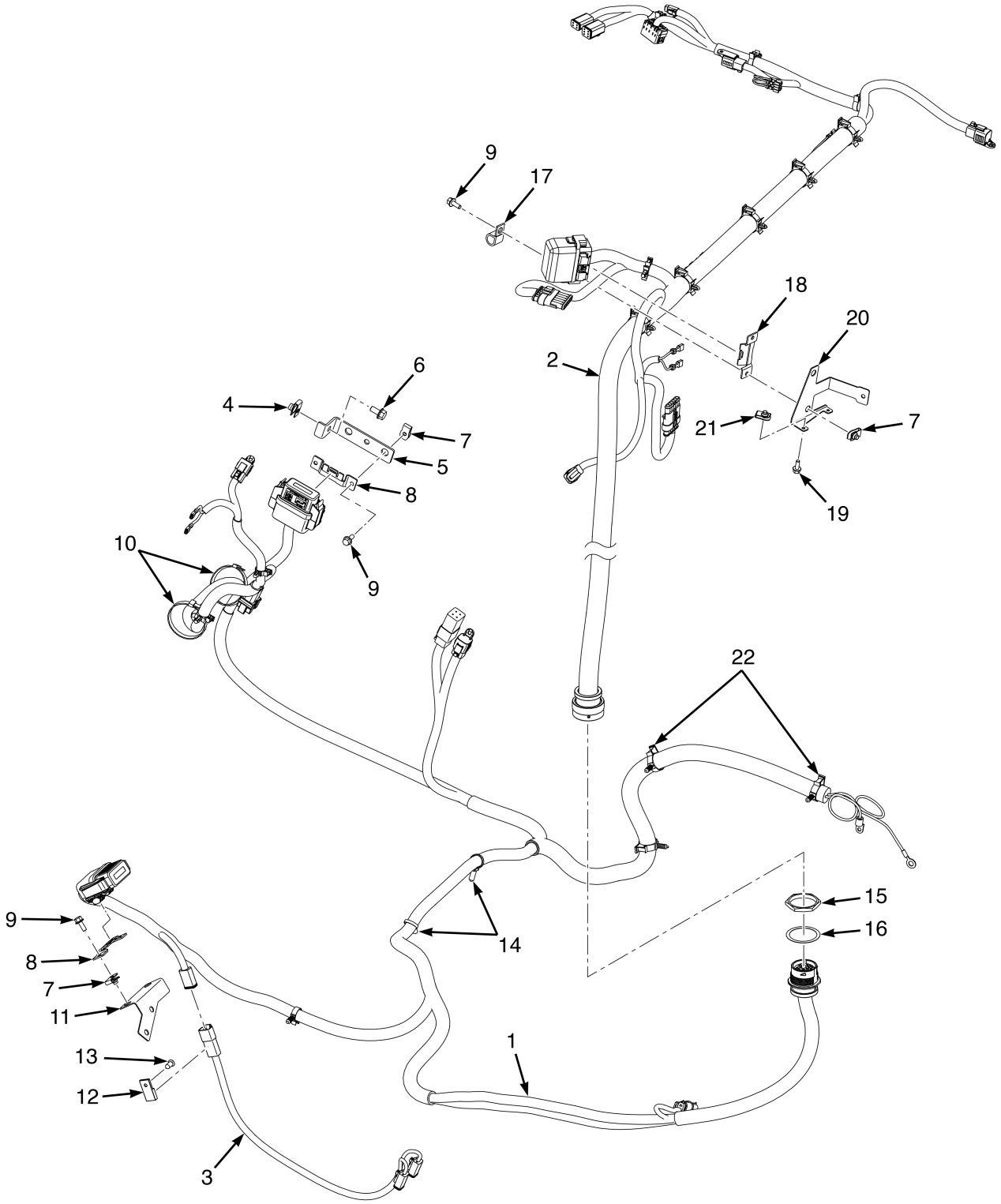

©2026 HYSTER COMPANY

CAB HARNESS

2.2L LPG AND 3.0L AND 3.3L DIESEL

ITEM	PART NO.	DESCRIPTION	QTY
1	4711711	Wire Harness (Lower) (☞Figure 11-78, ☞Figure 11-77)	1
1	4732560	Wire Harness (Cab - Lower) (Alternate Part)	1
2	4711710	Wire Harness (Upper) (☞Figure 11-80, ☞Figure 11-79)	1
3	4701870	Wire Harness - Washer Pump Jumper (☞Figure 11-81)	1
4	1480237	Nut (Foldover)	1
5	4275509	Bracket - Cab PDM	1
6	~~4109993~~		
	1527879	Capscrew	1
7	1566420	Nut (Foldover)	6
8	4273394	Bracket - 12 pin PDM	2
9	~~4111055~~		
	1527876	Capscrew	6
10	129563	Strap Clamp	2
11	4293389	Bracket - Cab, PDM Mounting	1
11	4379837	Bracket - Cab, PDM Mounting (Alternate Part)	1
12	1500912	Clip	1
13	1582464	Fastener	1
14	4140361	Cable Clip	2
15	1539085	Panel Nut	1
16	1539086	Lockwasher	1
17	209266	Clamp	1
18	4103785	Bracket	1
19	296149	Capscrew	2
19	~~4111055~~		
	1527876	Capscrew (Alternate Part)	2
20	4278650	Bracket - PDM Mounting	1
20	4324369	Bracket (PDM Mounting) (Alternate Part)	1
20	4377935	Bracket (PDM Mounting) (Alternate Part)	1
21	1683346	Insert	2
21	1566420	Nut (Foldover) (Alternate Part)	2
22	1509889	Clip	2

CABLE (FIGURE 11-20)

POSITIVE BATTERY CABLE — 2.1L (→ 4/2021)

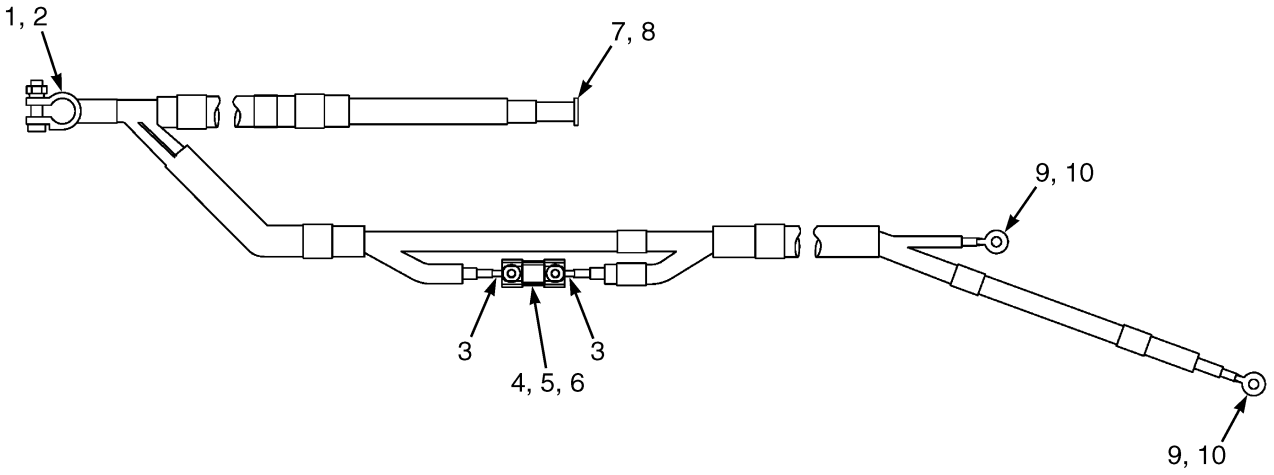

BP083246

ITEM	PART NO.	DESCRIPTION	QTY
	4699869	Battery Cable - Positive	1
1	148792	Terminal	1
2	1529550	Boot	1
3	806424	E-Ring	2
4	4695999	Fuse Holder	1
5	4707988	Fuse	1
6	4286097	Boot	2
7	4272099	Terminal	1
8	1590173	Boot	1
9	806425	E-Ring	2
10	1520864	Boot	2

See Service Manual for service procedures.
©2026 HYSTER COMPANY

NOTES

CONTROL PANEL ARRANGEMENT (FIGURE 11-21)

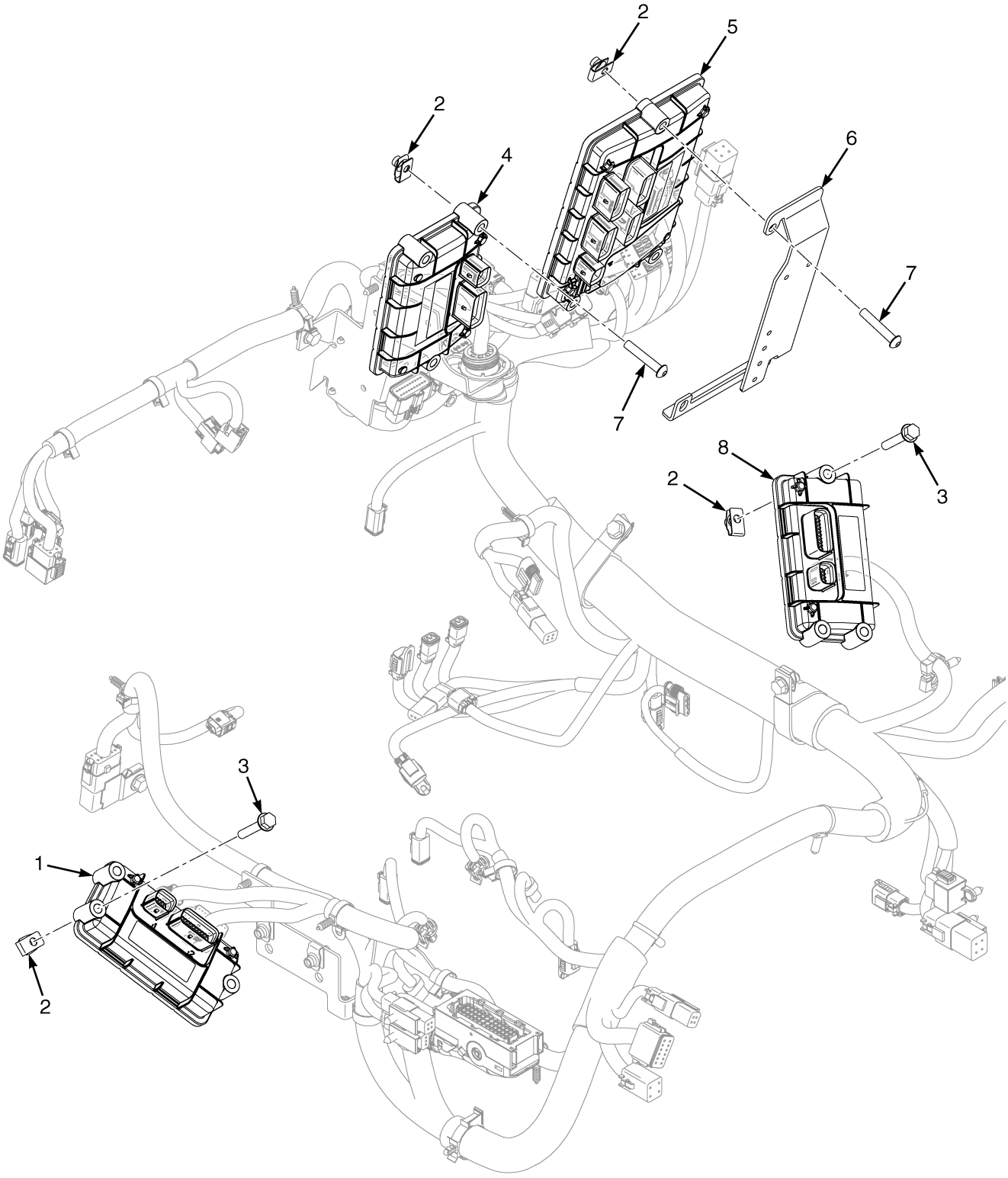

©2026 HYSTER COMPANY

CONTROL PANEL ARRANGEMENT

ITEM	PART NO.	DESCRIPTION	QTY
1	4644755	Controller (iBox) (Accessory 1)	1
2	1480237	Nut (Foldover)	9
3	1527882	Capscrew	6
4	4697054	Controller (O-Box) (E-Hyd)	1
4	4727608	Controller (O-Box) (Alternate Part)	1
5	4697053	Vehicle System Manager (Vsm)	1
5	81025187	Vehicle System Manager (Vsm) (Alternate Part)	1
6	4296239	Bracket	1
7	1399398	Capscrew	6
8	4644755	Controller (iBox) (Accessory 2)	1

©2026 HYSTER COMPANY

CONTROL PANEL ARRANGEMENT (FIGURE 11-22)
ALTERNATE CONFIGURATION

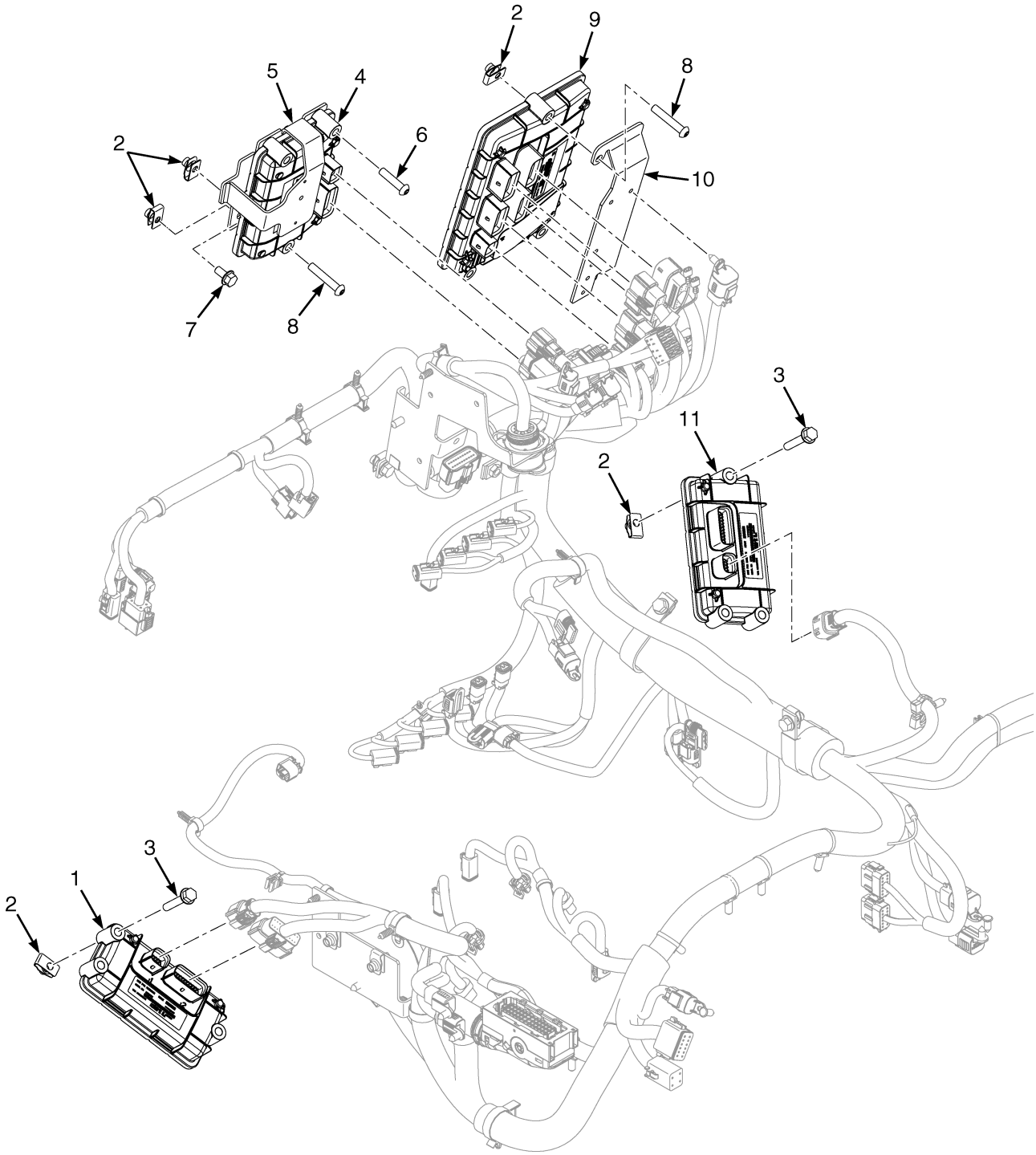

©2026 HYSTER COMPANY

CONTROL PANEL ARRANGEMENT
ALTERNATE CONFIGURATION

ITEM	PART NO.	DESCRIPTION	QTY
1	4644755	Controller (iBox) (Accessory 1)	1
2	1480237	Nut (Foldover)	13
3	1527882	Capscrew	6
4	4697054	Controller (O-Box) (E-Hyd) (☞Figure 11-24, ☞Figure 11-23)	1
4	4727608	Controller (O-Box) (Alternate Part) (☞Figure 11-24, ☞Figure 11-23)	1
5	4333014	Bracket	1
6	4333044	Screw	2
7	~~4109993~~		
	1527879	Capscrew	3
8	4295980	Screw	4
9	4697053	Vehicle System Manager (Vsm)	1
9	81025187	Vehicle System Manager (Vsm) (Alternate Part)	1
10	4296239	Bracket	1
11	4644755	Controller (iBox) (Accessory 2)	1

CONTROL PANEL ARRANGEMENT (FIGURE 11-23)

E-HYDRAULIC (→ 7/2022)

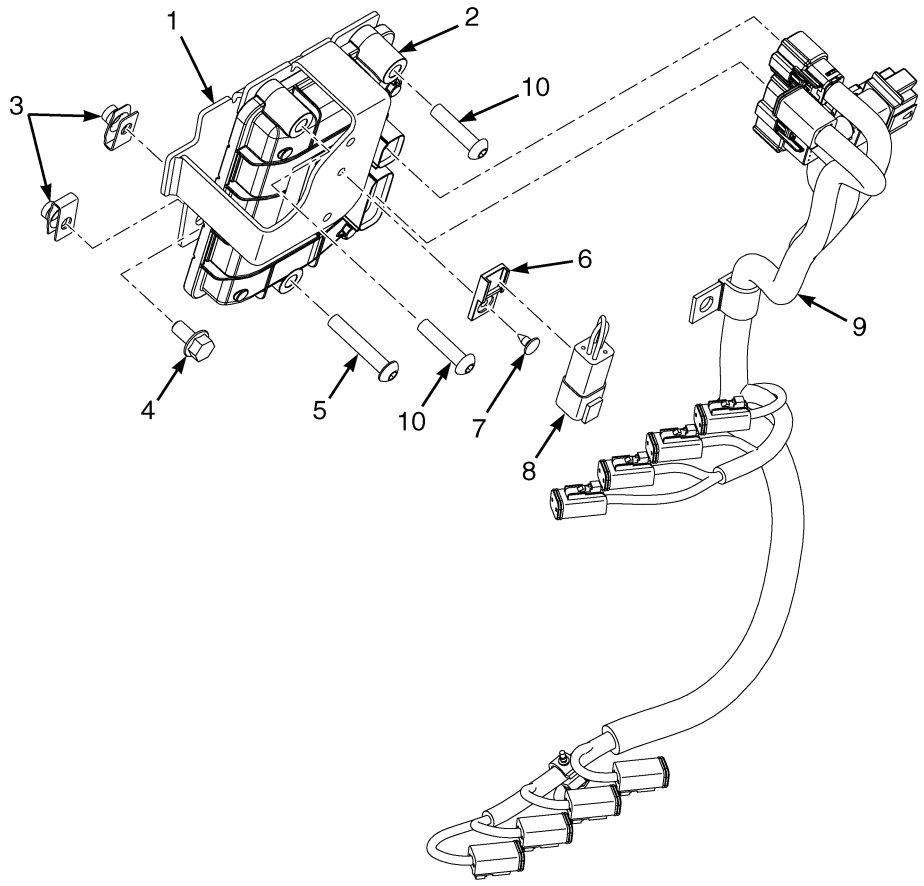

BP083528

ITEM	PART NO.	DESCRIPTION	QTY
1	4312486	Bracket	1
1	4333014	Bracket (Alternate Part)	1
2	4697054	Controller (O-Box)	1
2	4727608	Controller (O-Box) (Alternate Part)	1
3	1480237	Nut (Foldover)	6
4	~~4109993~~		
	1527879	Capscrew	3
5	1399398	Capscrew	1
5	4295980	Screw (Alternate Part)	1
6	1500912	Clip	1
7	1582464	Fastener	1
7	2100710	Fastener (Alternate Part)	1
8	4711034	Jumper	1
9	4710909	Wire Harness (E-Hyd 3 Function) (3 Function) (☞Figure 11-109)	1
9	4710908	Wire Harness (E-Hyd 4 Function) (4 Function) (☞Figure 11-109)	1
10	1399398	Capscrew	2
10	4333044	Screw (Alternate Part)	2

©2026 HYSTER COMPANY

NOTES

CONTROL PANEL ARRANGEMENT (FIGURE 11-24)

E-HYDRAULIC — WITH RIDE THRU

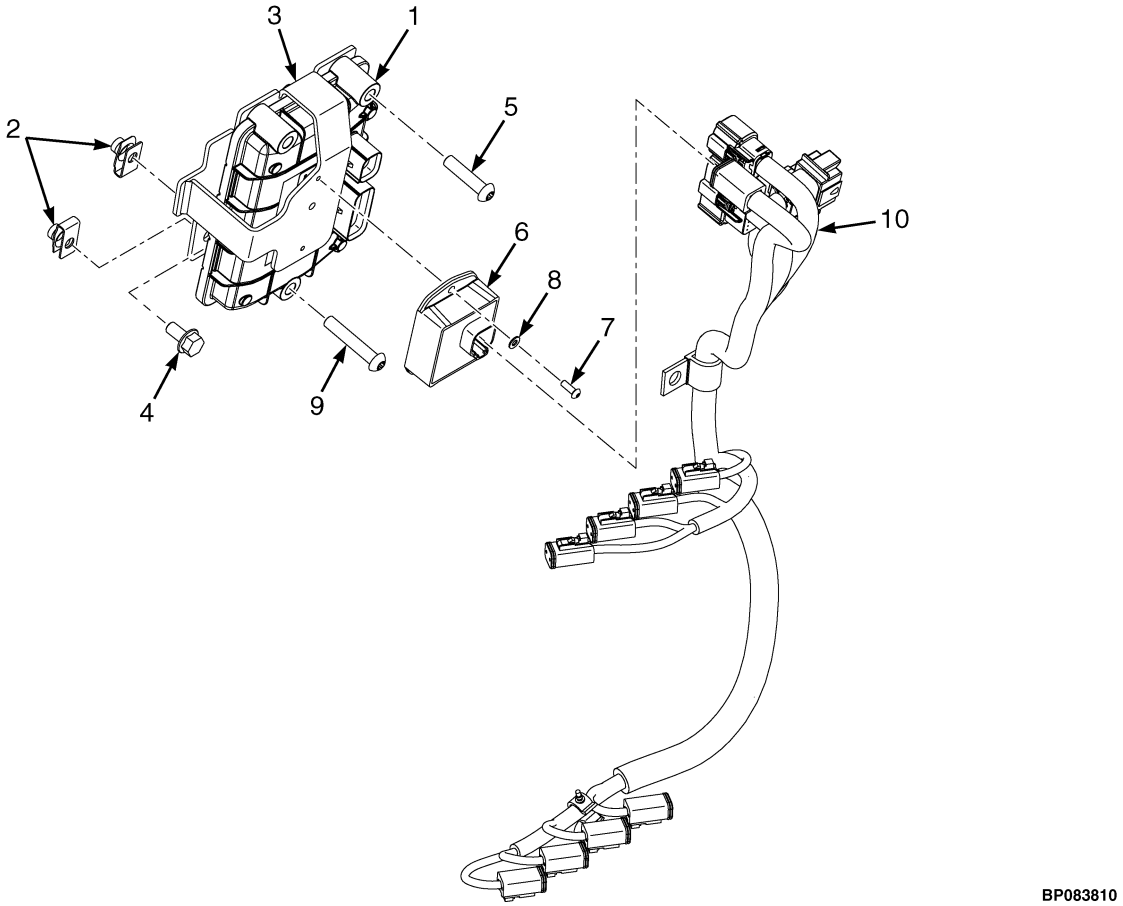

©2026 HYSTER COMPANY

CONTROL PANEL ARRANGEMENT

E-HYDRAULIC – WITH RIDE THRU

ITEM	PART NO.	DESCRIPTION	QTY
1	4697054	Controller (O-Box)	1
1	4727608	Controller (O-Box) (Alternate Part)	1
2	1480237	Nut (Foldover)	4
3	4333014	Bracket	1
4	~~4109993~~		
	1527879	Capscrew	3
5	4333044	Screw	2
6	4710385	Control Module - Ride Thru	1
7	4315839	Screw	2
8	320154	Washer	2
9	4295980	Screw	1
10	4710909	Wire Harness (E-Hyd 3 Function) (☞Figure 11-109)	1
10	4710908	Wire Harness (E-Hyd 4 Function) (☞Figure 11-109)	1

DASH ROCKER SWITCH ARRANGEMENT (FIGURE 11-25)

WORK LIGHT — WITH USB AND 12V OUTLETS

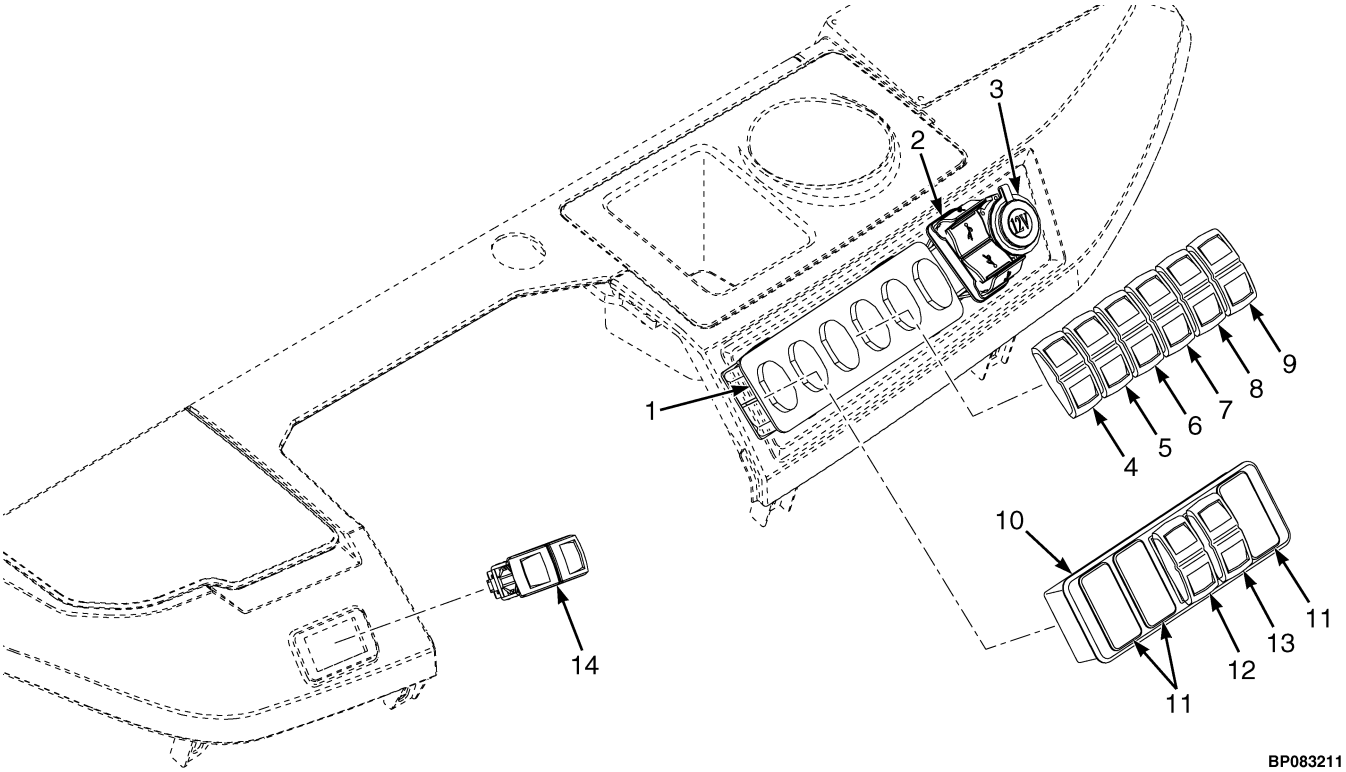

KEY:
A: Full Use of Six Bank Switches
B: Work or Hazard Only Arrangement

ITEM	PART NO.	DESCRIPTION	QTY A	QTY B
1	~~4693477~~			
	4716373	Console - 6 bank control module	1	1
2	4682430	Receptacle - USB Charger	1	1
2	1382313	Cover (Optional)	1	1
3	4172875	Receptacle - 12V	1	1
3	375479	Plug (Optional)	1	1
4	4696722	Rocker (Work Light)	1	..
4	4696723	Rocker - Blank (Optional)	1	..
5	4696724	Rocker (Mast Work Light)	1	..
5	4696723	Rocker - Blank (Optional)	1	..
6	4696725	Rocker (Fork Laser)	1	..
6	4696723	Rocker - Blank (Optional)	1	..
7	4696721	Rocker (Hazard Light)	1	..
7	4696723	Rocker - Blank (Optional)	1	..
8	4696726	Rocker (Bi-Fuel)	1	..
8	4696723	Rocker - Blank (Optional)	1	..
9	4696727	Rocker (Reverse Fan Timer)	1	..
9	4696723	Rocker - Blank (Optional)	1	..
10	4198541	Plug - 6 bank switch blank	..	1
11	1382313	Cover	..	3
12	4696719	Switch (Work Light)	..	1

©2026 HYSTER COMPANY

KEY:
A: Full Use of Six Bank Switches
B: Work or Hazard Only Arrangement

ITEM	PART NO.	DESCRIPTION	QTY A	QTY B
12	1382313	Cover (Optional)	..	1
13	4696718	Switch (Hazard Light)	..	1
13	1382313	Cover (Optional)	..	1
14	**a** 4696717	Switch - Parking Brake, Rocker Switch	1	1

FOOTNOTES:

a Wet Brake Only

DISPLAY (FIGURE 11-26)

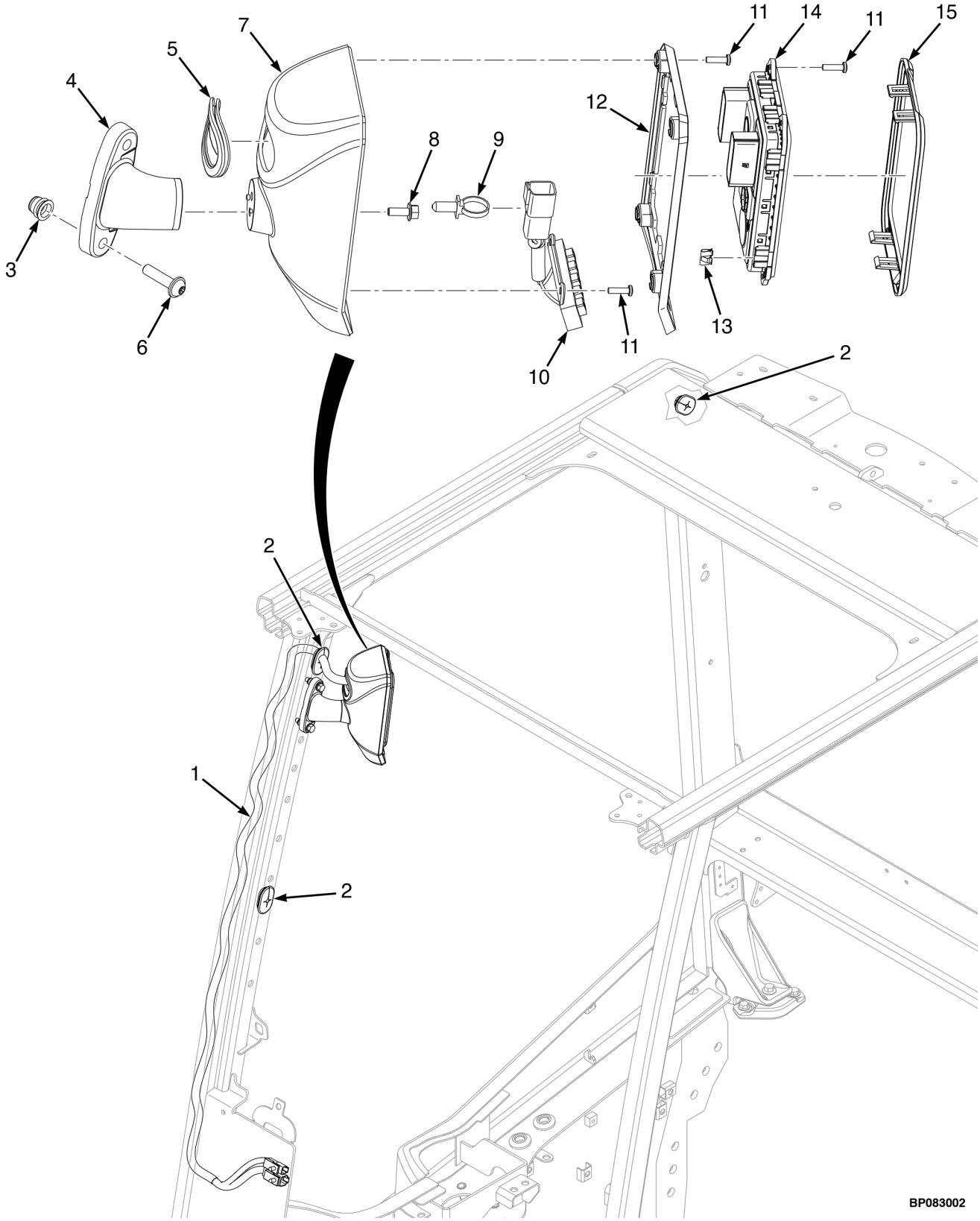

©2026 HYSTER COMPANY

DISPLAY

KEY:
A: 2.8in Display
B: 5in Display
C: 7in Display

ITEM	PART NO.	DESCRIPTION	QTY A	QTY B	QTY C
1	. . . . .	Display Wire Harness (☞Figure 11-107)	1	1	1
2	4681740	Grommet	3	3	3
3	1531557	Insert	2	2	2
3	1530243	Insert (Optional)	2	2	2
4	4660439	Bracket	1	1	1
5	4708135	Grommet	1	1	1
6	4309799	Screw	2	2	2
7	4660837	Cover	1	..	..
7	4659286	Cover	..	1	..
7	4328702	Display (Cover) (Alternate Part)	..	1	..
7	4716502	Cover (Alternate Part)	..	1	..
7	**a** 4659287	Cover	..	..	1
7	**b** 4723353	Cover	..	..	1
7	**c** 4728991	Cover	..	..	1
8	~~4111055~~				
	1527876	Capscrew	2	2	2
8	1531479	Capscrew (Alternate Part)	..	2	2
9	4140361	Cable Clip	1	1	1
10	4193853	Display - 5 button keypad	..	1	1
10	4697066	Plug - 5 button keypad	1	..	..
11	1704669	Screw	8	10	10
12	4660836	Cover	1	..	..
12	4659282	Cover	..	1	..
12	4659283	Cover	..	..	1
13	4143878	Clip	4	4	4
14	4647455	Display , Dash (Standard Common Arch 2 - 8 Color)	1	..	..
14	4719231	Display , Dash (Standard Common Arch Color) (2.8in) (Alternate Part)	1	..	..
14	4647456	Display , Dash (Premium Common Arch 5 - 0 Color)	..	1	..
14	4719232	Display , Dash (Premium Common Arch Color) (5in) (Alternate Part)	..	1	..
14	81016247	Dash Display (5in) (Alternate Part)	..	1	..
14	4647457	Display , Dash (Advanced Common Arch 7 - 0 Color)	..	..	1
14	4719233	Display , Dash (Advanced Common Arch Color) (7 in.) (Alternate Part)	..	..	1
14	81016553	Dash Display (7in) (Alternate Part)	..	..	1
15	4647452	Bezel	1	..	..
15	4647453	Bezel	..	1	..
15	4647454	Bezel	..	..	1

FOOTNOTES:

a → 8/2022
b 8/2022 ↔ 1/2023
c 1/2023 →

DISPLAY (FIGURE 11-27)
REAR MOUNTED

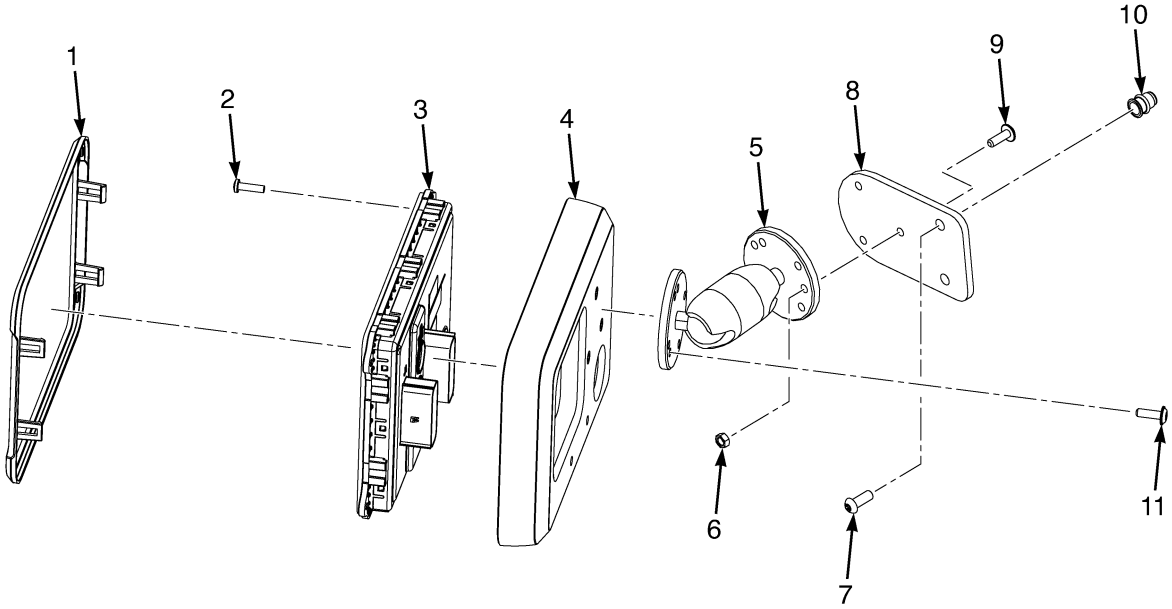

BP001382

ITEM	PART NO.	DESCRIPTION	QTY
1	4647454	Bezel (Front)	1
2	1704669	Screw	4
3	4647457	Display , Dash (Advanced Common Arch 7 - 0 Color)	1
4	4217830	Bezel (Rear)	1
5	4245020	Mount (RAM 1 in. Short)	1
6	2056600	Nut	3
7	1510126	Screw (Button Head)	2
7	4242165	Screw (Alternate Part)	2
7	4196032	Screw (Alternate Part)	2
8	4328799	Bracket	1
9	4249208	Capscrew	3
10	1531001	Insert	2
11	4249208	Capscrew	3
11	18706	Capscrew (Alternate Part)	3

©2026 HYSTER COMPANY

NOTES

ELECTRICAL ARRANGEMENT (FIGURE 11-28)
FRAME

©2026 HYSTER COMPANY

ELECTRICAL ARRANGEMENT
FRAME

ITEM	PART NO.	DESCRIPTION	QTY
1	4682686	Wire Harness - Front OHG w/o Turn (☞Figure 11-110)	2
1	4682705	Wire Harness - Front OHG w/ Turn Signal (☞Figure 11-110)	2
2	4702430	Wire Harness - Display w/ Keyboard (☞Figure 11-107)	1
2	4702429	Wire Harness - Display w/o keyboard (☞Figure 11-107)	1
3	4694820	Wire Harness - Column (Base Levers/Sync) (☞Figure 11-103)	1
3	4694819	Wire Harness - Column (Base Horn/Keys) (☞Figure 11-103)	1
3	4694821	Wire Harness - Column (Full Levers) (☞Figure 11-105)	1
3	4694822	Wire Harness - Column (Full Levers/Sync) (☞Figure 11-105)	1
4	4697053	Vehicle System Manager (Vsm)	1
4	81025187	Vehicle System Manager (Vsm) (Alternate Part)	1
5	4710020	Wire Harness - Chassis, Powershift Transmission (Base Opt) (☞Figure 11-82)	1
5	4710000	Wire Harness - Chassis, Powershift Transmission (Mid Opt) (☞Figure 11-86, ☞Figure 11-87)	1
5	4710001	Wire Harness - Chassis, Powershift Transmission (Full Opt) (☞Figure 11-86, ☞Figure 11-87)	1
6	4697609	Horn (☞Figure 11-42)	1
7	4697531	Fuse Box - ICE PDM (☞Figure 11-31)	1
8	4700685	Wire Harness - Rear Audible and Low Coolant (☞Figure 11-74)	1
9	4703902	Wire Harness - Audible Alarm Jumper (2.0T) (☞Figure 11-75)	1
9	4700686	Wire Harness - Audible Alarm Jumper (2.5T) (☞Figure 11-75)	1
9	4706932	Wire Harness - Audible Alarm Jumper (2.5-3.0T) (☞Figure 11-75)	1
10	4715482	Wire Harness - Seat (Air Ride w/o MLM) (☞Figure 11-134)	1
10	4715481	Wire Harness - Seat (Mech-Susp w/o MLM) (☞Figure 11-135)	1
10	4715483	Wire Harness - Seat (Mech-Susp w/ MLM) (☞Figure 11-135)	1
10	4715484	Wire Harness - Seat (Air Ride w/ MLM) (☞Figure 11-134)	1
10	4715485	Wire Harness - Seat (Air Ride, Type-S w/ MLM) (☞Figure 11-134, ☞Figure 11-135)	1
10	4715486	Wire Harness - Seat (Air Ride, Type-S w/o MLM) (☞Figure 11-134, ☞Figure 11-135)	1
11	4700174	Wire Harness - Rear OHG Mid (☞Figure 11-129)	1
11	4700173	Wire Harness - Rear OHG Full (☞Figure 11-129)	1
11	4700175	Wire Harness - Rear OHG Base (☞Figure 11-129)	1
12	4698154	Alarm (Audible) (☞Figure 11-7)	1
13	313221	Clamp	2
14	1527880	Capscrew	2
15	1480237	Nut (Foldover)	4
16	~~4109993~~		
	1527879	Capscrew	5
17	4313431	Bracket (Retention)	1
18	1509889	Clip	1
19	4263848	Bracket - Harness	1
20	4285480	Clamp	1
21	~~1382472~~		
	1502543	Nut	1
22	89220	Clamp	1
23	4313428	Bracket - Chassis Harness Mounting	1
24	2068337	Pressure Switch (Hyd Filter Cap / Premium Option)	1
25	1707681	Pressure Transducer (Load Weigh)	1
26	4695221	Wire Harness - Maintenance Charge (☞Figure 11-119)	1

ELECTRICAL ARRANGEMENT (FIGURE 11-29)
FRAME — ALTERNATE CONFIGURATION

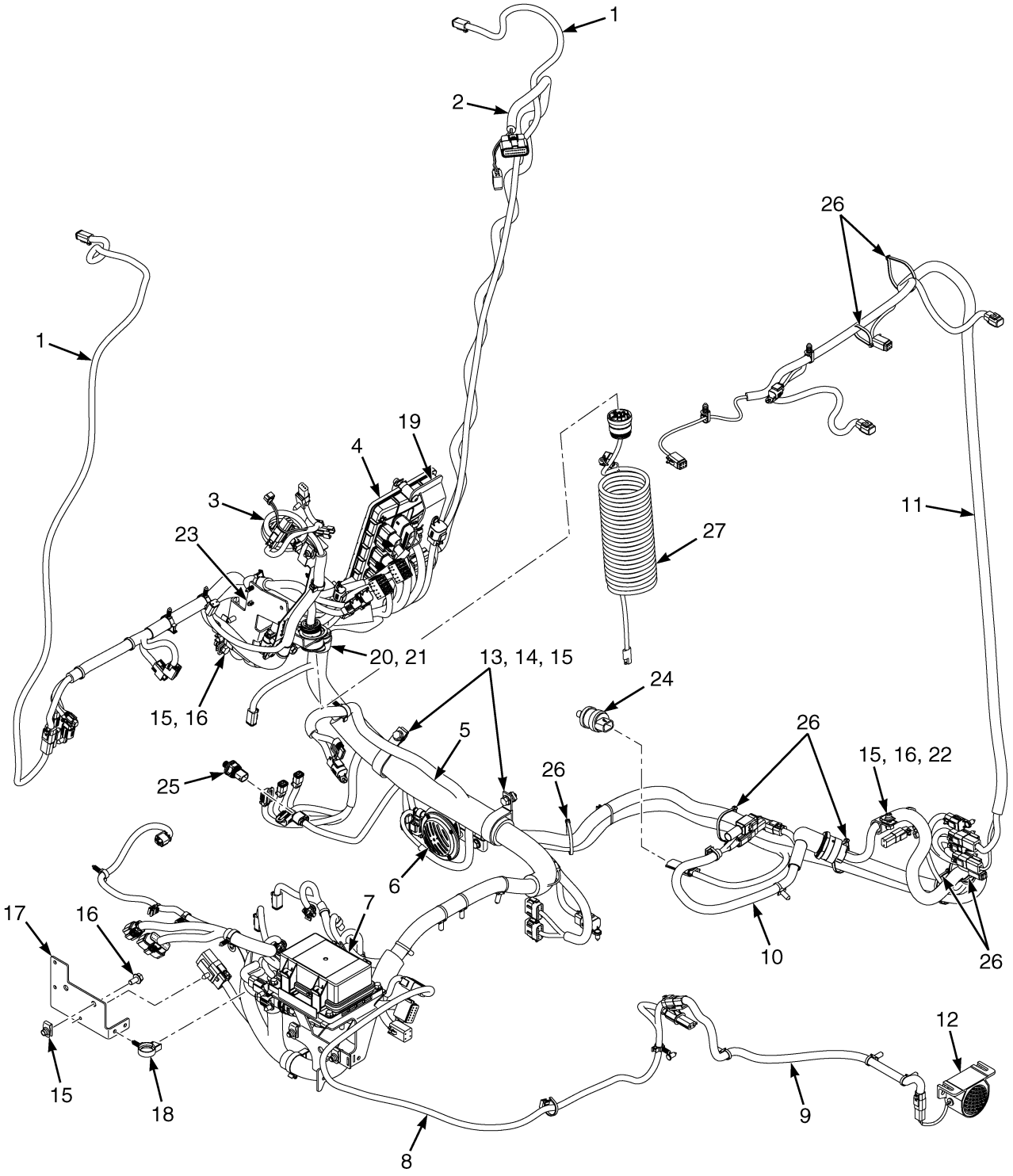

©2026 HYSTER COMPANY

ELECTRICAL ARRANGEMENT
FRAME – ALTERNATE CONFIGURATION

ITEM	PART NO.	DESCRIPTION	QTY
1	4682686	Wire Harness - Front OHG w/o Turn (☞Figure 11-110)	2
1	4682705	Wire Harness - Front OHG w/ Turn Signal (☞Figure 11-110)	2
2	4702430	Wire Harness - Display w/ Keyboard (☞Figure 11-107)	1
2	4702429	Wire Harness - Display w/o keyboard (☞Figure 11-107)	1
3	4694820	Wire Harness - Column (Base Levers/Sync) (☞Figure 11-103)	1
3	4694819	Wire Harness - Column (Base Horn/Keys) (☞Figure 11-103)	1
3	4694821	Wire Harness - Column (Full Levers) (☞Figure 11-105)	1
3	4694822	Wire Harness - Column (Full Levers/Sync) (☞Figure 11-105)	1
4	4697053	Vehicle System Manager (Vsm)	1
4	81025187	Vehicle System Manager (Vsm) (Alternate Part)	1
5	**d** 4716883	Wire Harness (Chassis - Powershift Transmission (Base Opt)) (☞Figure 11-83)	1
5	**g** 4723209	Wire Harness (Chassis - Powershift Transmission (Base Opt)) (☞Figure 11-83)	1
5	**d** 4716886	Wire Harness (Chassis - Powershift Transmission (Mid Opt)) (☞Figure 11-88, ☞Figure 11-89)	1
5	**g** 4724260	Wire Harness (Chassis - Powershift Transmission (Mid Opt)) (☞Figure 11-88, ☞Figure 11-89)	1
5	**d** 4716887	Wire Harness (Chassis - Powershift Transmission (Full Opt)) (☞Figure 11-90, ☞Figure 11-91)	1
5	**g** 4724261	Wire Harness (Chassis - Powershift Transmission (Full Opt)) (☞Figure 11-90, ☞Figure 11-91)	1
5	**d** 4716888	Wire Harness (Chassis - Diesel IDI Transmission (Base Opt)) (☞Figure 11-93)	1
5	**e** 4724418	Wire Harness (Chassis - Diesel IDI Transmission (Base Opt)) (☞Figure 11-93)	1
5	**f** 4725041	Wire Harness (Chassis - Diesel IDI Transmission (Base Opt)) (☞Figure 11-93)	1
5	**i** 4731488	Wire Harness (Chassis - Dsl - IDI - Base Opt)	1
5	**d** 4716881	Wire Harness (Chassis - Diesel IDI Transmission (Full Opt)) (☞Figure 11-94, ☞Figure 11-95)	1
5	**e** 4724417	Wire Harness (Chassis - Diesel IDI Transmission (Full Opt)) (☞Figure 11-94, ☞Figure 11-95)	1
5	**f** 4725040	Wire Harness (Chassis - Diesel IDI Transmission (Full Opt)) (☞Figure 11-94, ☞Figure 11-95)	1
5	**i** 4731487	Wire Harness (Chassis - Dsl - IDI - Full Opt)	1
5	**c** 4710131	Wire Harness (Chassis - Hydrostatic Transmission (Full Opt)) (☞Figure 11-99, ☞Figure 11-101)	1
5	**h** 4733396	Wire Harness - Chassis, Hydrostatic Transmission (Full Opt)	1
6	4697609	Horn (☞Figure 11-42)	1
7	4697531	Fuse Box - ICE PDM (☞Figure 11-31)	1
8	4700685	Wire Harness - Rear Audible and Low Coolant (☞Figure 11-74)	1
9	4703902	Wire Harness - Audible Alarm Jumper (H40) (☞Figure 11-75)	1
9	4700686	Wire Harness - Audible Alarm Jumper (H50A) (☞Figure 11-75)	1
9	4706932	Wire Harness - Audible Alarm Jumper (H55A-H60A) (☞Figure 11-75)	1
9	4712421	Wire Harness - Audible Alarm Jumper (H70A) (☞Figure 11-75)	1
10	4715482	Wire Harness - Seat (Air Ride w/o MLM) (☞Figure 11-134)	1
10	4715481	Wire Harness - Seat (Mech-Susp w/o MLM) (☞Figure 11-135)	1
10	4715483	Wire Harness - Seat (Mech-Susp w/ MLM) (☞Figure 11-135)	1
10	4715484	Wire Harness - Seat (Air Ride w/ MLM) (☞Figure 11-134)	1
10	4715485	Wire Harness - Seat (Air Ride, Type-S w/ MLM) (☞Figure 11-134, ☞Figure 11-135)	1

ELECTRICAL ARRANGEMENT
FRAME – ALTERNATE CONFIGURATION

ITEM	PART NO.	DESCRIPTION	QTY
10	4715486	Wire Harness - Seat (Air Ride, Type-S w/o MLM) (☞Figure 11-134, ☞Figure 11-135)	1
11	4700175	Wire Harness - Rear OHG Base (☞Figure 11-130)	1
11	4716645	Wire Harness - Rear OHG Mid (☞Figure 11-131)	1
11	4716646	Wire Harness - Rear OHG Full (☞Figure 11-132)	1
11	4721837	Wire Harness - Rear OHG Full (Alternate Part)	1
12	4698154	Alarm (Audible) (☞Figure 11-7)	1
13	**b** 313221	Clamp	2
13	**a** 258590	Clamp	2
14	1527880	Capscrew	2
15	1480237	Nut (Foldover)	5
16	~~4109993~~		
	1527879	Capscrew	5
17	4313431	Bracket (Retention)	1
18	1509889	Clip	1
19	4296239	Bracket	1
20	4285480	Clamp	1
21	~~1382472~~		
	1502543	Nut	1
22	**b** 101625	Clamp	1
22	**a** 113341	Clamp	1
23	4313428	Bracket - Chassis Harness Mounting	1
23	4350366	Bracket - Chassis Harness Mounting (Alternate Part)	1
24	2068337	Pressure Switch (Hyd Filter Cap / Premium Option)	1
24	4717370	Pressure Switch (Alternate Part)	1
25	4213802	Pressure Transducer (Load Weight Indicator)	1
26	2004005	Strap Clamp	7
27	4695221	Wire Harness - Maintenance Charge (☞Figure 11-119)	1

FOOTNOTES:

a For use with item 5 Base Options.
b For use with item 5 Mid and Full Options.
c → 2/2024
d → 8/2022
e 8/2022 ↔ 9/2022
f 9/2022 ↔ 3/2024
g 8/2022 →
h 2/2024 →
i 3/2024 →

©2026 HYSTER COMPANY

NOTES

ELECTRICAL ARRANGEMENT (FIGURE 11-30)
MAST — WITH MAST LIGHTS

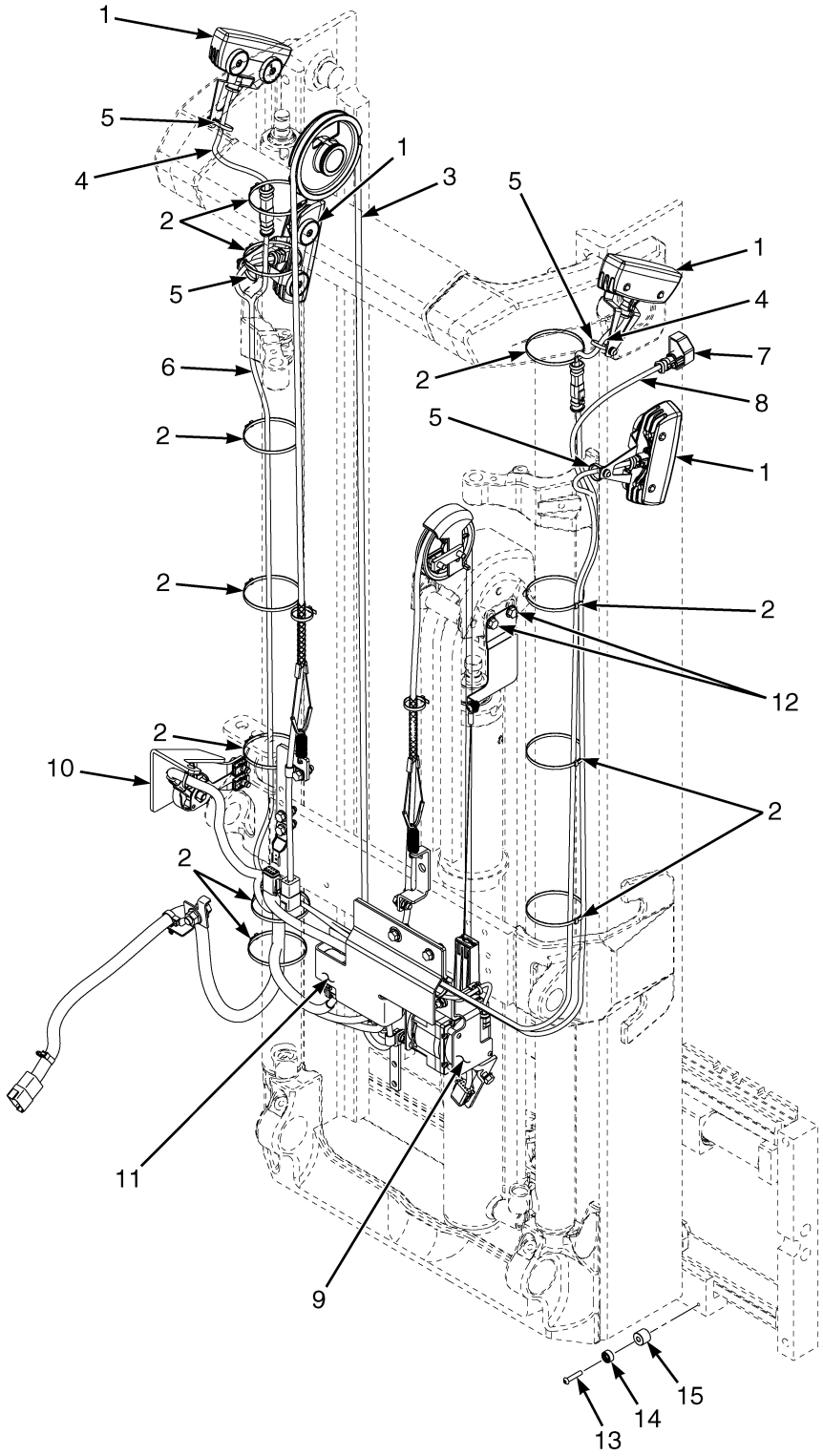

BP083153

©2026 HYSTER COMPANY

ELECTRICAL ARRANGEMENT
MAST – WITH MAST LIGHTS

ITEM	PART NO.	DESCRIPTION	QTY
1	4702475	Work Light - Mast	4
1	4705426	Kit-Bracket - Strain Relief with hardware	1
1	4705427	Kit - VL4 Magnets with hardware	1
2	2004005	Strap Clamp	12
3	. . . . .	Wire Take Up (☞Figure 17-13, ☞Figure 20-17)	1
4	. . . . .	Wire Harness - Upper Mast Work Lights (☞Figure 11-136)	2
5	4697921	Cable (Clip)	4
6	4690527	Wire Harness - Mast Lights, Lower (2 Lights) (☞Figure 11-117)	1
6	4693223	Wire Harness - Mast Lights, Lower (4 Lights) (☞Figure 11-118)	1
7	~~4693225~~		
	4714773	Sensor-Mast Height (OAS Level 1) (☞Figure 11-49)	1
8	4695588	Wire Harness - Lift Height, OAS Level 1 (☞Figure 11-116)	1
9	. . . . .	Lift Height Sensor, OAS Level 2 (☞Figure 11-46)	1
10	. . . . .	Tilt Sensor (☞Figure 11-71)	1
11	. . . . .	Power To Mast OAS Level 1 (☞Figure 11-67)	1
12	4223693	Capscrew	2
13	**c** 4198533	Screw	1
13	**c** 296219	Screw (Alternate Part)	1
13	**b** 4196033	Screw	1
13	**b** 296215	Capscrew (Alternate Part)	1
14	**d** 4278962	Magnet	1
14	**e** 4318273	Magnet	1
14	4319558	Magnet (Alternate Part)	1
15	**a** 4240138	Spacer	1

FOOTNOTES:

a If needed.
b w/ spacer
c w/o spacer
d → 5/2021
e 5/2021 →

FUSE BOX (FIGURE 11-31)
MOUNTING

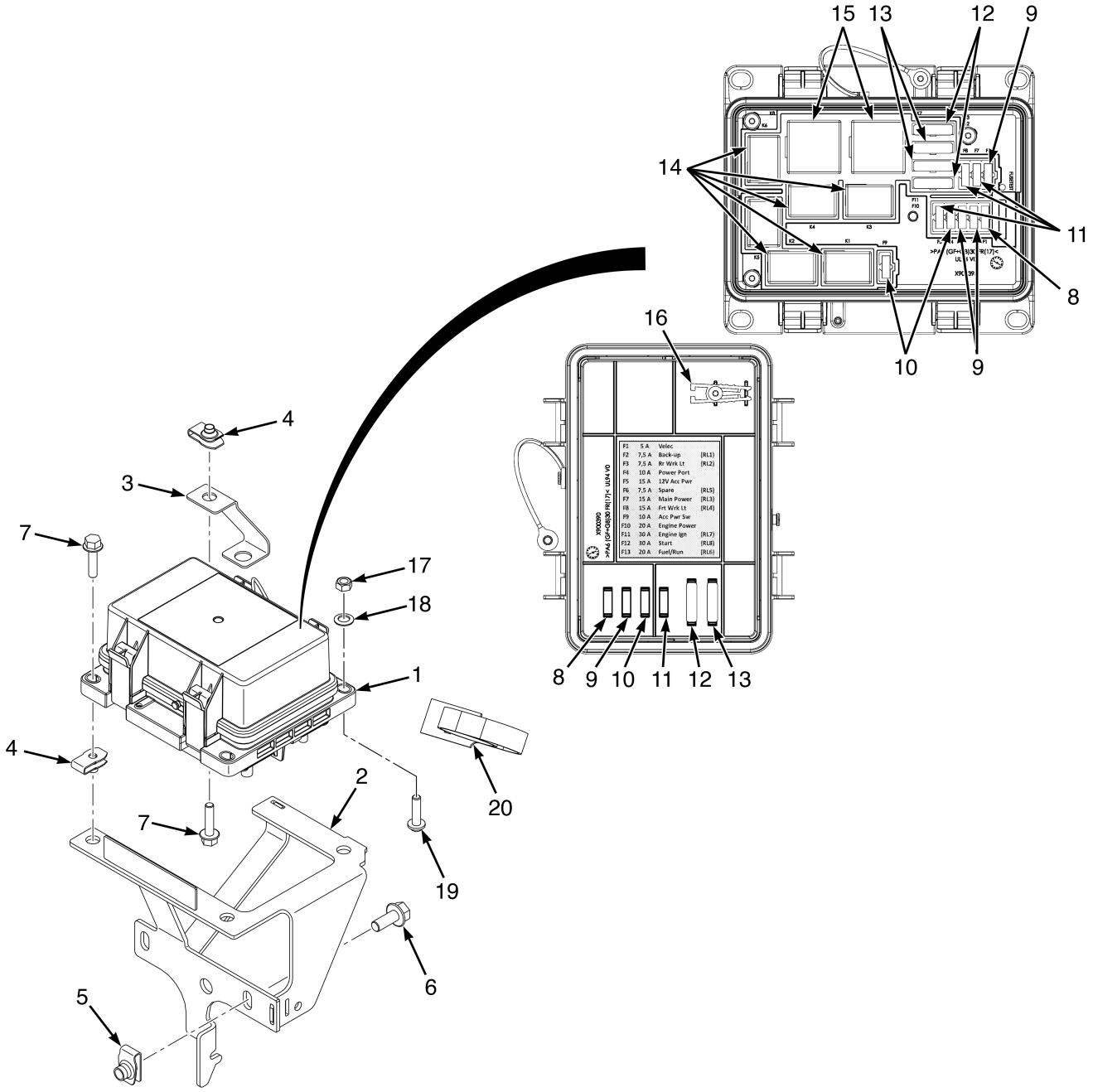

BP084412

©2026 HYSTER COMPANY

FUSE BOX
MOUNTING

ITEM	PART NO.	DESCRIPTION	QTY
1	4697531	Fuse Box - ICE PDM	1
2	**b** 4282447	Bracket Wldmt - PDM	1
2	**d** 4298062	Bracket Wldmt - PDM	1
2	**g** 4369100	Bracket Wldmt - PDM	1
3	4282381	Bracket (Battery Cable)	1
4	**c** 1566420	Nut (Foldover)	4
4	**f** 1566420	Nut (Foldover)	3
5	1480237	Nut (Foldover)	2
6	1527880	Capscrew	2
7	**c** 1527878	Capscrew	4
7	**f** 1527878	Capscrew	3
8	1498044	Fuse (5 Amp)	2
9	1498045	Fuse (7.5 Amp)	4
10	1498046	Fuse (10 Amp)	3
11	1498047	Fuse (15 Amp)	4
12	370648	Fuse (20 Amp)	3
13	1320669	Fuse (30 Amp)	3
14	4270332	Relay , Micro	6
15	4270333	Relay - Mini	2
16	4270334	Fuse Puller	1
17	**e** 4295553	Nut	1
17	**g** ~~1307884~~		
	1514429	Nut	1
18	**e** 4312821	Retainer	1
19	**e** 4309801	Screw	1
19	**g** 4144668	Stud	1
20	**f** 4215659	Retainer	1
	a 4713580	Label (PDM Caution)	1
	a 4716359	Label - PDM Caution (Non U.S.) (Alternate Part)	1

FOOTNOTES:

a Not Illustrated
b → 10/2020
c → 5/2023
d 10/2020 ↔ 6/2023
e 5/2023 ↔ 6/2023
f 5/2023 →
g 6/2023 →

HARNESS RETENTION (FIGURE 11-32)

ENGINE — 2.1L DIESEL

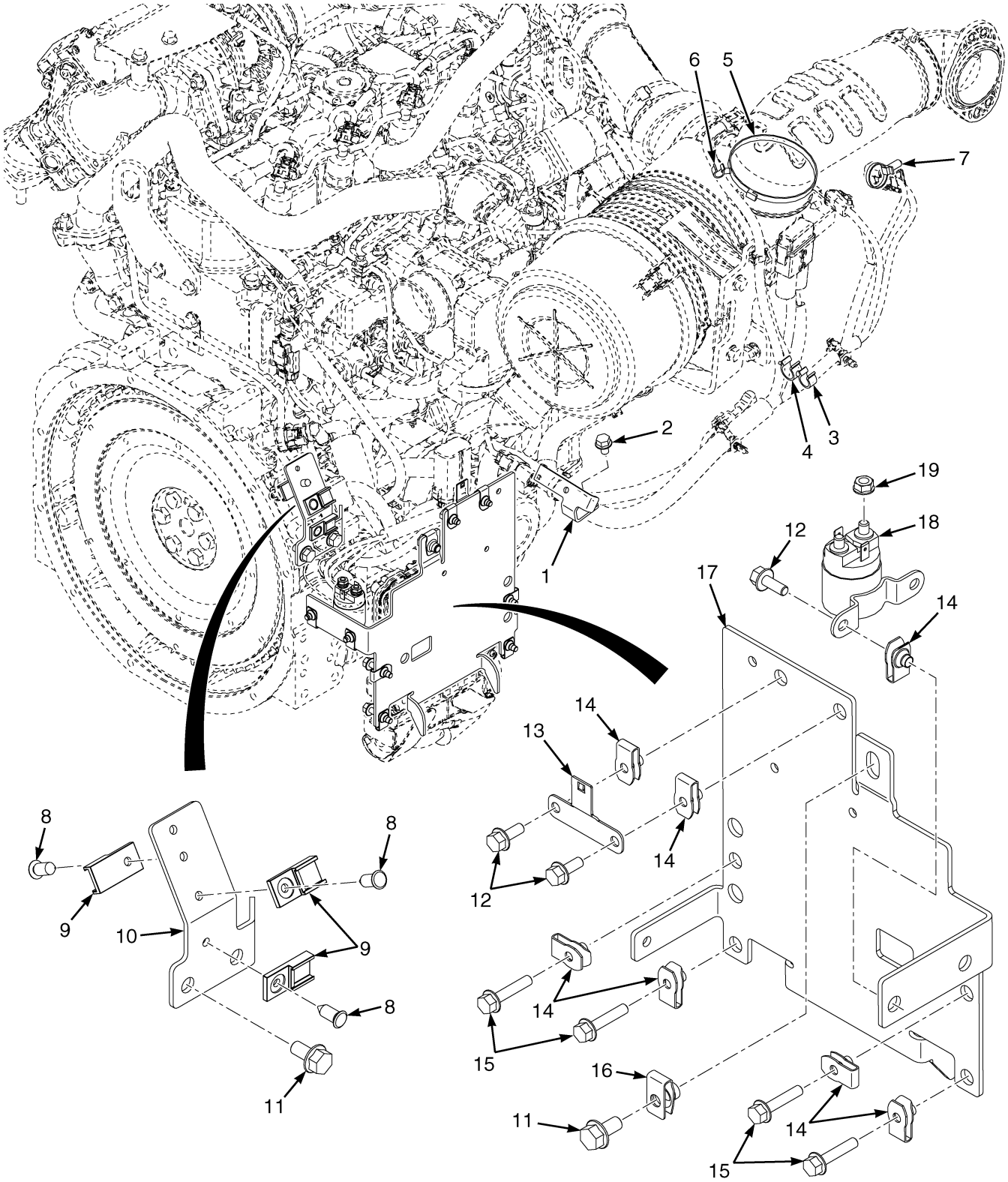

©2026 HYSTER COMPANY

HARNESS RETENTION

ENGINE – 2.1L DIESEL

ITEM	PART NO.	DESCRIPTION	QTY
1	4268968	Bracket - Fuel Sender	1
2	1529366	Capscrew	1
3	1502055	Clamp (Swivel)	1
4	1543691	Clamp (Swivel)	1
5	1502061	Clamp (Swivel)	1
6	1561871	Clamp (Swivel)	1
7	4140361	Cable Clip	1
8	1582464	Fastener	4
9	1500912	Clip	4
10	**a** 4281435	Bracket - Diesel Engine Interconnections	1
10	**b** 4371210	Bracket - Harness	1
10	**c** 81003016	Bracket Wldmt (Harness)	1
11	~~4109993~~		
	1527879	Capscrew	3
12	~~4111055~~		
	1527876	Capscrew	4
13	4045423	Bracket	1
14	1566420	Nut (Foldover)	8
15	1531479	Capscrew	4
16	1480237	Nut (Foldover)	1
17	4239715	Bracket - ECU Mounting	1
18	1454967	Relay (Lift Pump/Starter or Glow Plug)	1
19	4295553	Nut	2

FOOTNOTES:

a → 6/2023
b 6/2023 ↔ 11/2024
c 11/2024 →

HARNESS RETENTION (FIGURE 11-33)

ENGINE — 2.2L LPG

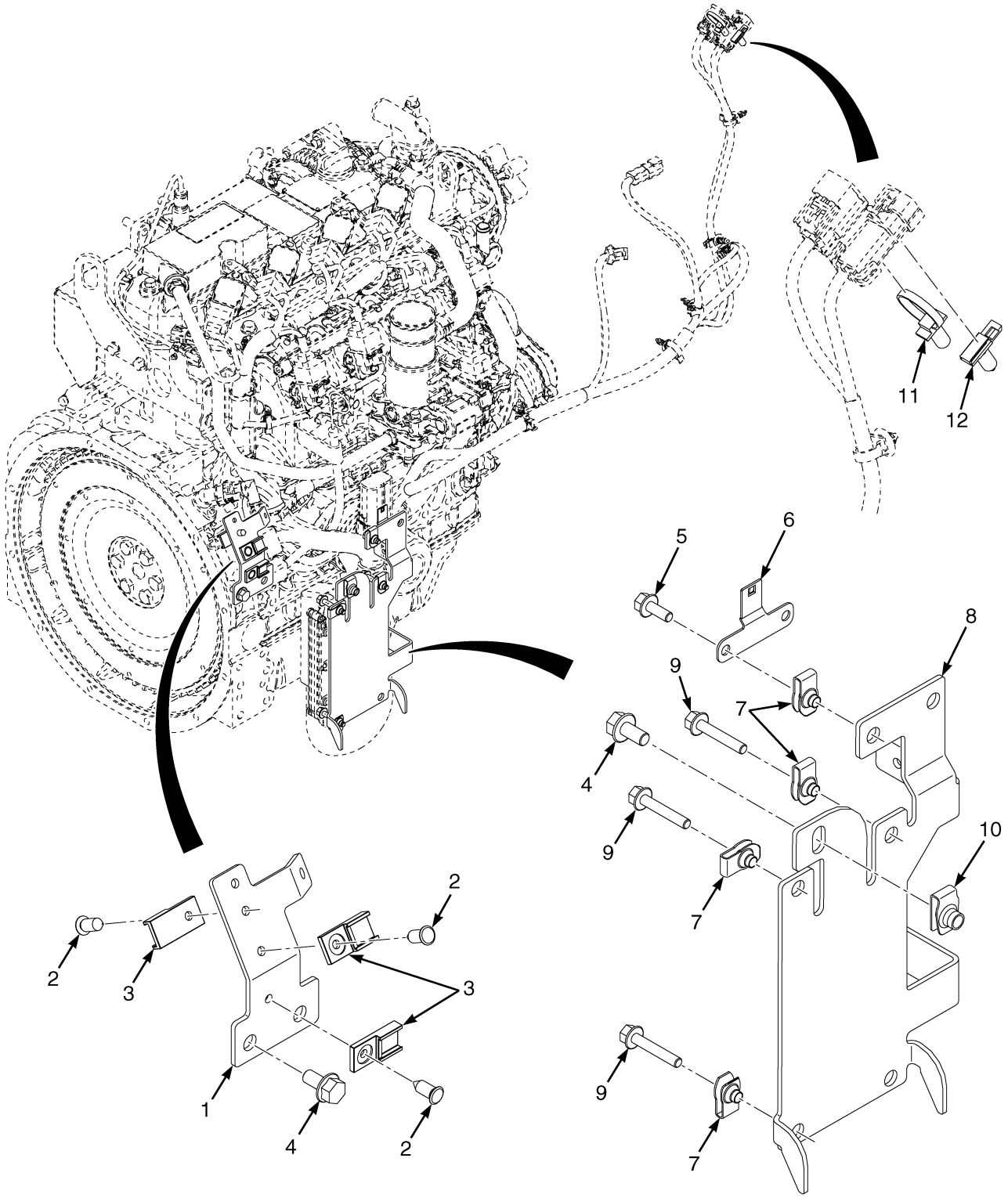

©2026 HYSTER COMPANY

HARNESS RETENTION

ENGINE – 2.2L LPG

ITEM	PART NO.	DESCRIPTION	QTY
1	**a** 4248745	Bracket - Harness	1
1	**b** 4371210	Bracket - Harness	1
1	**c** 81003016	Bracket Wldmt (Harness)	1
2	1582464	Fastener	3
3	1500912	Clip	3
4	~~4109993~~		
	1527879	Capscrew	3
5	~~4111055~~		
	1527876	Capscrew	2
6	4045423	Bracket	1
7	1566420	Nut (Foldover)	6
8	4239714	Bracket - ECU LPG	1
9	4271852	Capscrew	4
10	1480237	Nut (Foldover)	1
11	4140361	Cable Clip	1
12	1520513	Clip	1

FOOTNOTES:

a → 6/2023
b 6/2023 ↔ 11/2024
c 11/2024 →

HARNESS RETENTION (FIGURE 11-34)

ENGINE — 2.2L LPG/BI-FUEL (ALTERNATE CONFIGURATION)

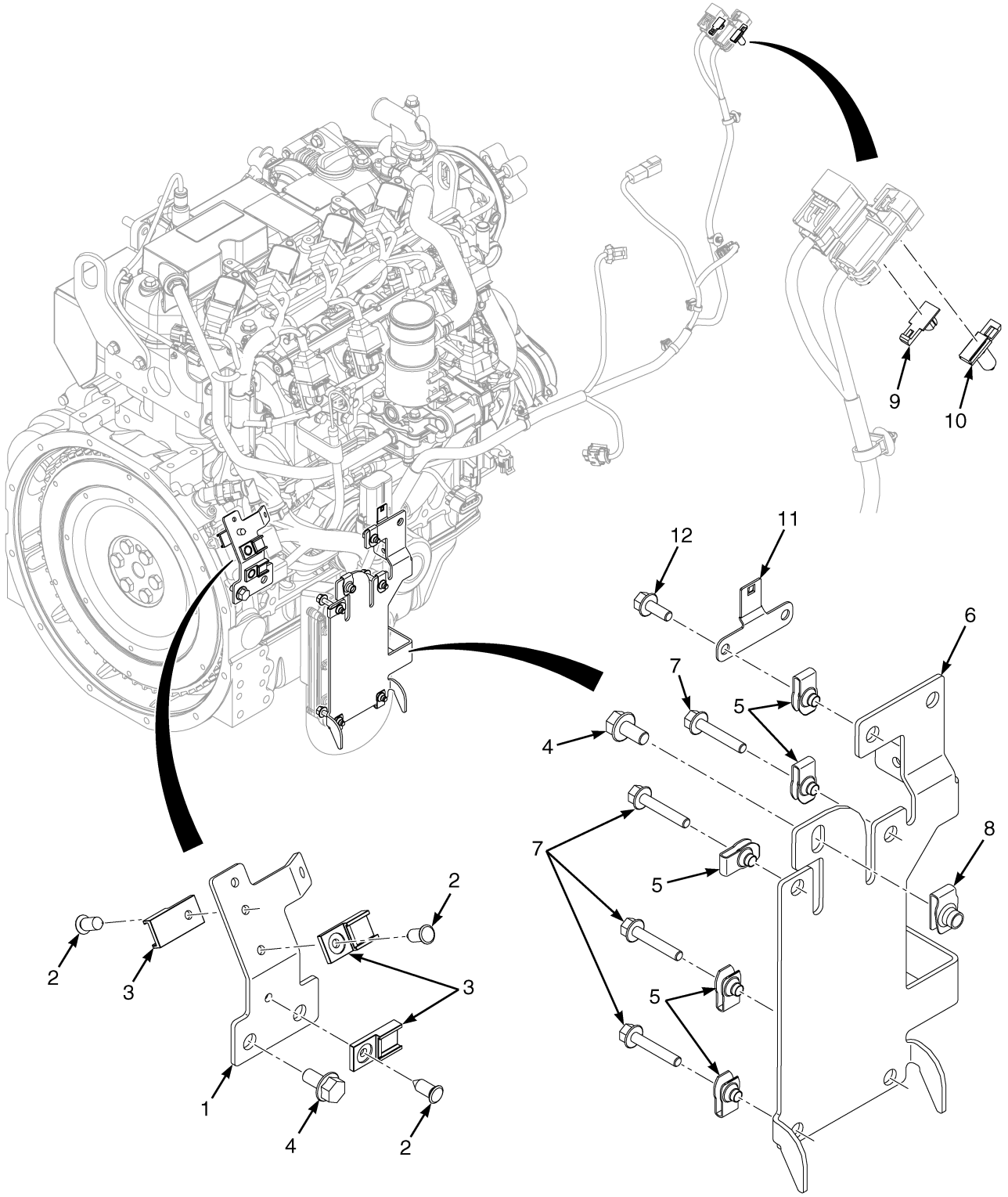

©2026 HYSTER COMPANY

HARNESS RETENTION

ENGINE – 2.2L LPG/BI-FUEL (ALTERNATE CONFIGURATION)

KEY:
A: LPG
B: Bi-Fuel

ITEM	PART NO.	DESCRIPTION	QTY A	QTY B
1	**a** 4248745	Bracket - Harness	1	1
1	**b** 4371210	Bracket - Harness	1	1
1	**c** 81003016	Bracket Wldmt (Harness)	1	1
2	1582464	Fastener	3	3
3	1500912	Clip	3	3
4	~~4109993~~			
	1527879	Capscrew	3	3
5	1566420	Nut (Foldover)	4	6
6	4239714	Bracket - ECU LPG	1	1
7	4271852	Capscrew	4	4
8	1480237	Nut (Foldover)	1	1
9	4280612	Connector (Mounting Clip)	1	1
10	1520513	Clip	1	1
11	4045423	Bracket	..	1
12	~~4111055~~			
	1527876	Capscrew	..	2

FOOTNOTES:

a → 6/2023
b 6/2023 ↔ 11/2024
c 11/2024 →

HARNESS RETENTION (FIGURE 11-35)

ENGINE — 3.0L AND 3.3L DIESEL

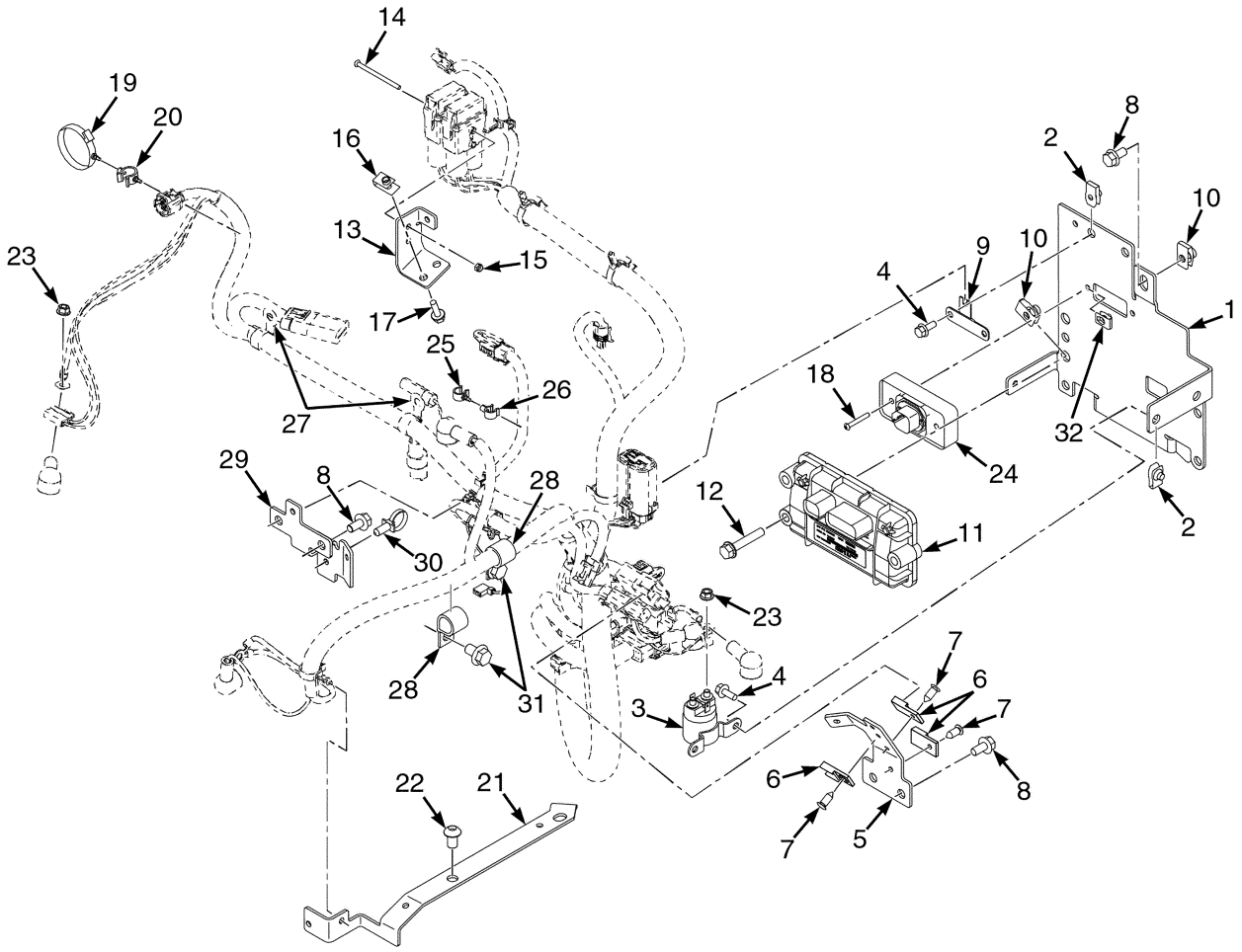

BP083649

©2026 HYSTER COMPANY

HARNESS RETENTION

ENGINE – 3.0L AND 3.3L DIESEL

KEY:
A: With E-Throttle
B: Without E-Throttle

ITEM	PART NO.	DESCRIPTION	QTY A	QTY B
1	4239715	Bracket - ECU Mounting	1	1
2	1566420	Nut (Foldover)	4	4
3	1454967	Relay (Lift Pump/Starter or Glow Plug)	1	1
4	~~4111055~~			
	1527876	Capscrew	4	4
5	4248745	Bracket - Harness	1	1
5	4371209	Bracket - Harness (Alternate Part)	1	1
6	1500912	Clip	3	3
7	1582464	Fastener	3	3
8	~~4109993~~			
	1527879	Capscrew	5	5
9	4045423	Bracket	1	1
10	1480237	Nut (Foldover)	4	4
11	4644755	Controller (iBox)	1	1
12	1527882	Capscrew	3	3
13	4265344	Bracket (Fuse Holder)	1	1
14	4312481	Screw	2	2
15	815597	Nut	2	2
16	1350215	Nut (Foldover)	2	2
17	1527877	Capscrew	2	2
18	1672692	Screw	2	..
19	4160428	Clamp (Swivel Tie)	1	1
20	1542439	Clamp (Swivel)	1	1
21	4304652	Bracket (Throttle Cable)	1	1
22	1597442	Capscrew	2	2
23	4295553	Nut	3	3
24	4712747	Amplifier (Solid State Relay)	1	..
25	1573549	Clamp (Swivel)	1	..
26	1561871	Clamp (Swivel)	1	..
27	1599843	Clamp	2	2
28	89220	Clamp	2	2
29	4304653	Bracket (Engine)	1	1
30	4140361	Cable Clip	1	1
31	1528778	Capscrew	2	2
32	1537551	Nut (Clip)	2	..

HARNESS RETENTION (FIGURE 11-36)
HYDROSTATIC TRANSMISSION

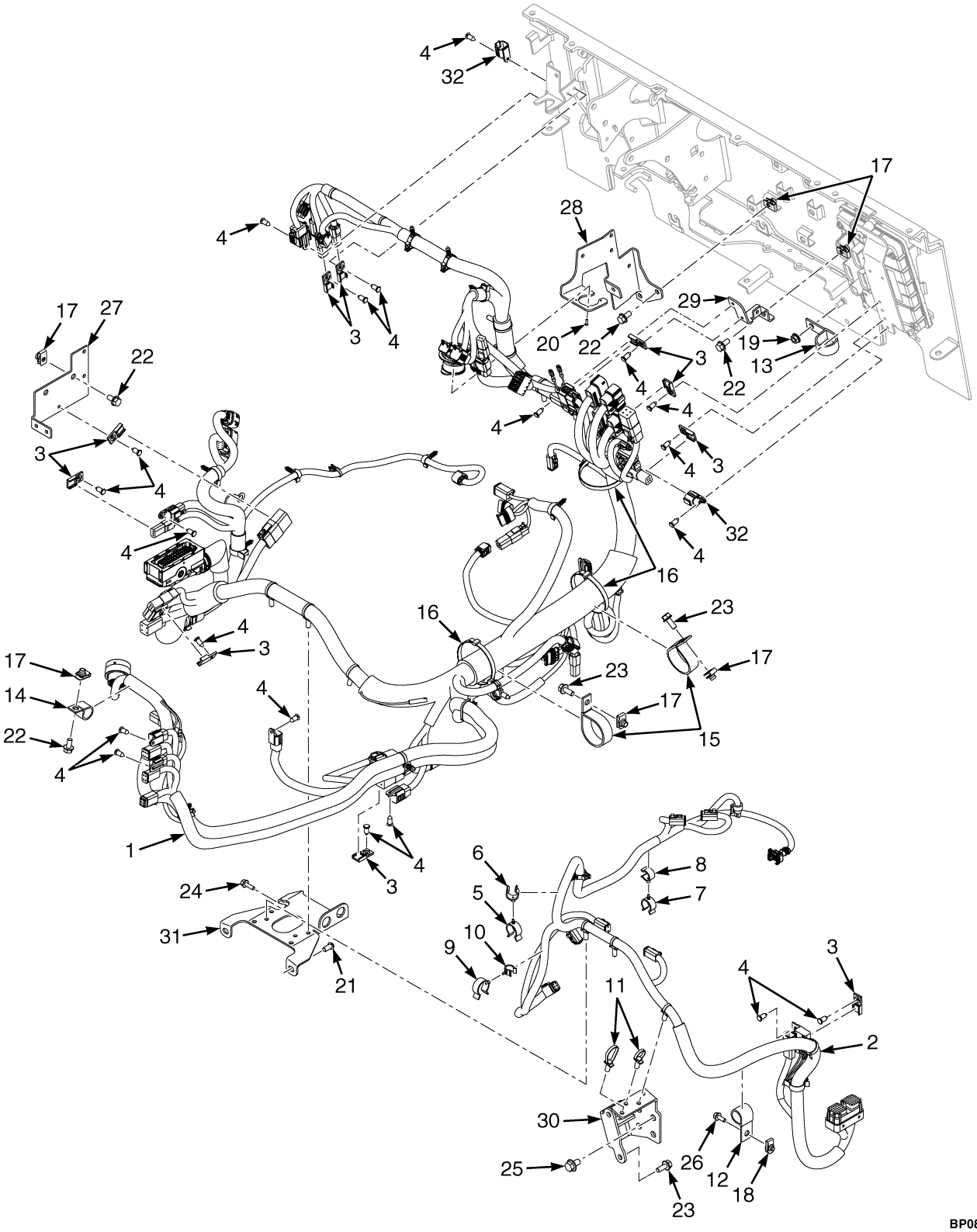

©2026 HYSTER COMPANY

HARNESS RETENTION
HYDROSTATIC TRANSMISSION

ITEM	PART NO.	DESCRIPTION	QTY
1	**b** 4710131	Wire Harness (Chassis - Hydrostatic Transmission (Full Opt)) (☞Figure 11-99, ☞Figure 11-101)	1
1	**c** 4733396	Wire Harness - Chassis, Hydrostatic Transmission (Full Opt)	1
2	4707525	Wire Harness (Transmission - HST) (☞Figure 11-114)	1
3	1500912	Clip	10
4	1582464	Fastener	20
5	1502056	Clamp (Swivel)	1
6	1502059	Clamp (Swivel)	1
7	1502066	Clamp (Swivel)	1
8	1606544	Clamp (Swivel)	1
9	1542436	Clamp (Swivel)	1
10	1502055	Clamp (Swivel)	1
11	4140361	Cable Clip	2
12	1397326	Clamp	1
13	4285480	Clamp	1
14	101625	Clamp	1
15	313221	Clamp	2
16	129563	Strap Clamp	3
17	1480237	Nut (Foldover)	8
18	1566420	Nut (Foldover)	1
19	~~1382472~~		
	1502543	Nut	1
20	4244155	Screw	4
21	4120965	Screw	2
22	~~4109993~~		
	1527879	Capscrew	6
23	1527880	Capscrew	4
24	1527877	Capscrew	1
25	1528778	Capscrew	4
26	~~4111055~~		
	1527876	Capscrew	1
27	4313431	Bracket (Retention)	1
28	4313428	Bracket - Chassis Harness Mounting	1
29	4315803	Bracket (E-Hyd Interconnection)	1
30	~~4280415~~		
	4331925	Bracket Wldmt	1
31	4331861	Bracket	1
32	**a** 4036523	Cap	2

FOOTNOTES:

a For use without front work lights.
b → 2/2024
c 2/2024 →

HARNESS RETENTION (FIGURE 11-37)

OHG, TRANSMISSION AND AUDIBLE ALARM (→ 4/2021)

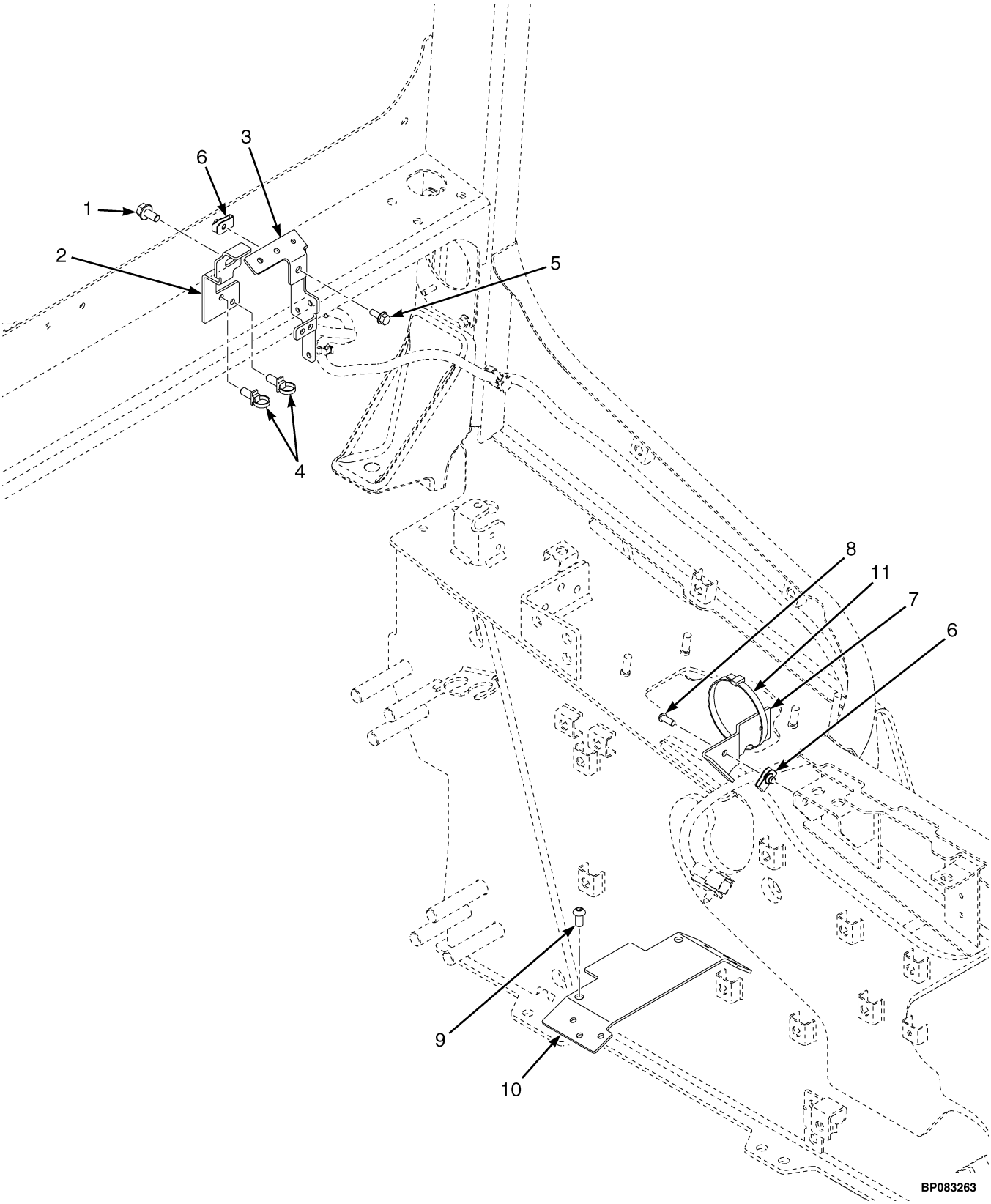

©2026 HYSTER COMPANY

ITEM	PART NO.	DESCRIPTION	QTY
1	~~4109993~~		
	1527879	Capscrew	1
2	4291412	Bracket - O2 and EGT Sensor	1
3	4291411	Bracket	1
4	4140361	Cable Clip	2
5	~~4111055~~		
	1527876	Capscrew	1
6	1566420	Nut (Foldover)	2
7	4285117	Bracket - Harness Retention	1
8	1510126	Screw (Button Head)	1
9	4120965	Screw	2
10	4248254	Plate - Harness Cover	1
11	129563	Strap Clamp	1

©2026 HYSTER COMPANY

HARNESS RETENTION (FIGURE 11-38)

OHG, TRANSMISSION AND AUDIBLE ALARM (4/2021 →)

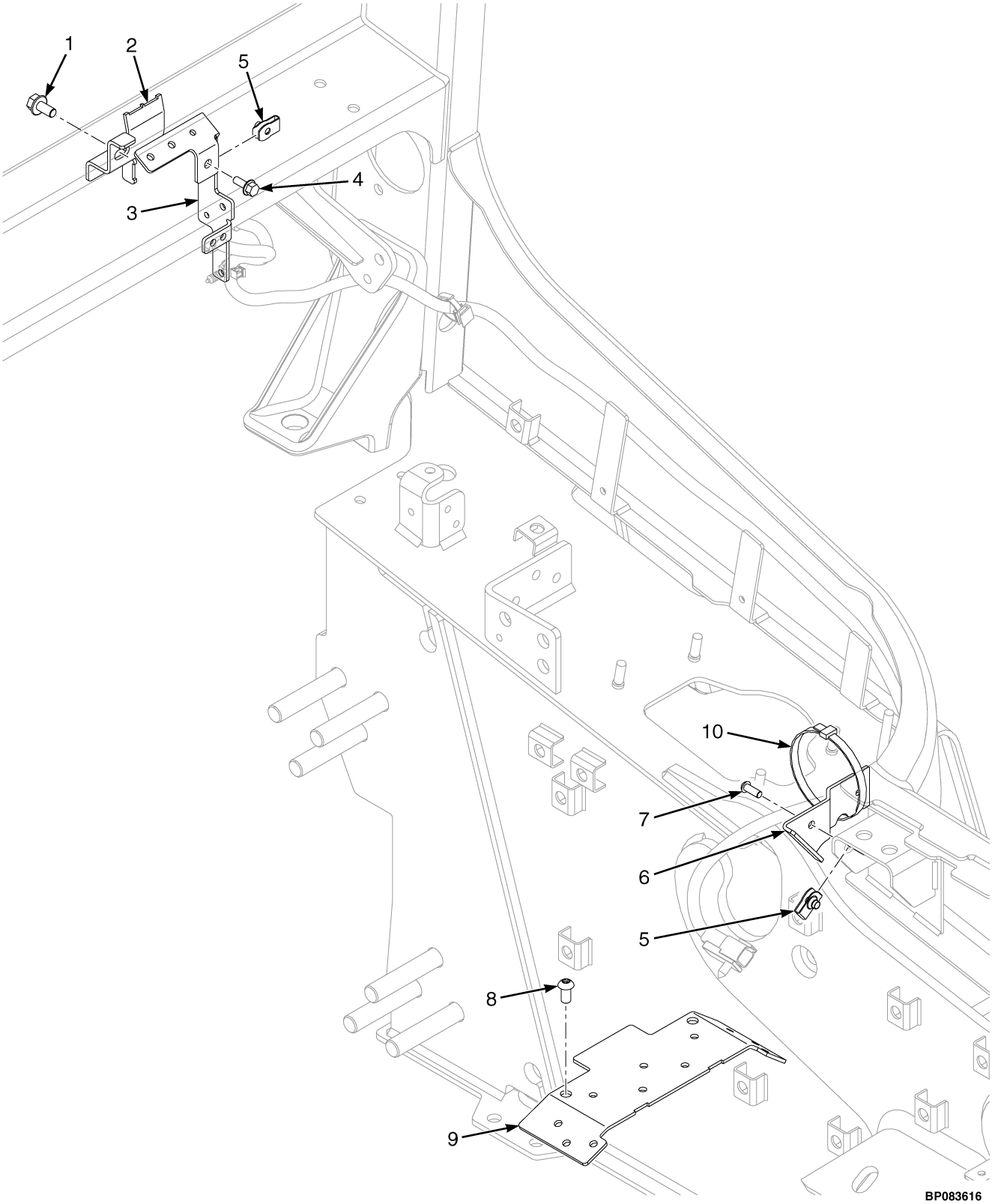

©2026 HYSTER COMPANY

ITEM	PART NO.	DESCRIPTION	QTY
1	~~4109993~~		
	1527879	Capscrew	1
2	4319908	Bracket (O2 and EGT Sensor)	1
3	4291411	Bracket	1
4	~~4111055~~		
	1527876	Capscrew	1
5	1566420	Nut (Foldover)	2
6	4285117	Bracket - Harness Retention	1
7	1510126	Screw (Button Head)	1
8	4120965	Screw	2
9	4248254	Plate - Harness Cover	1
10	129563	Strap Clamp	1

©2026 HYSTER COMPANY

HARNESS RETENTION (FIGURE 11-39)
SINGLE SPEED TRANSMISSION

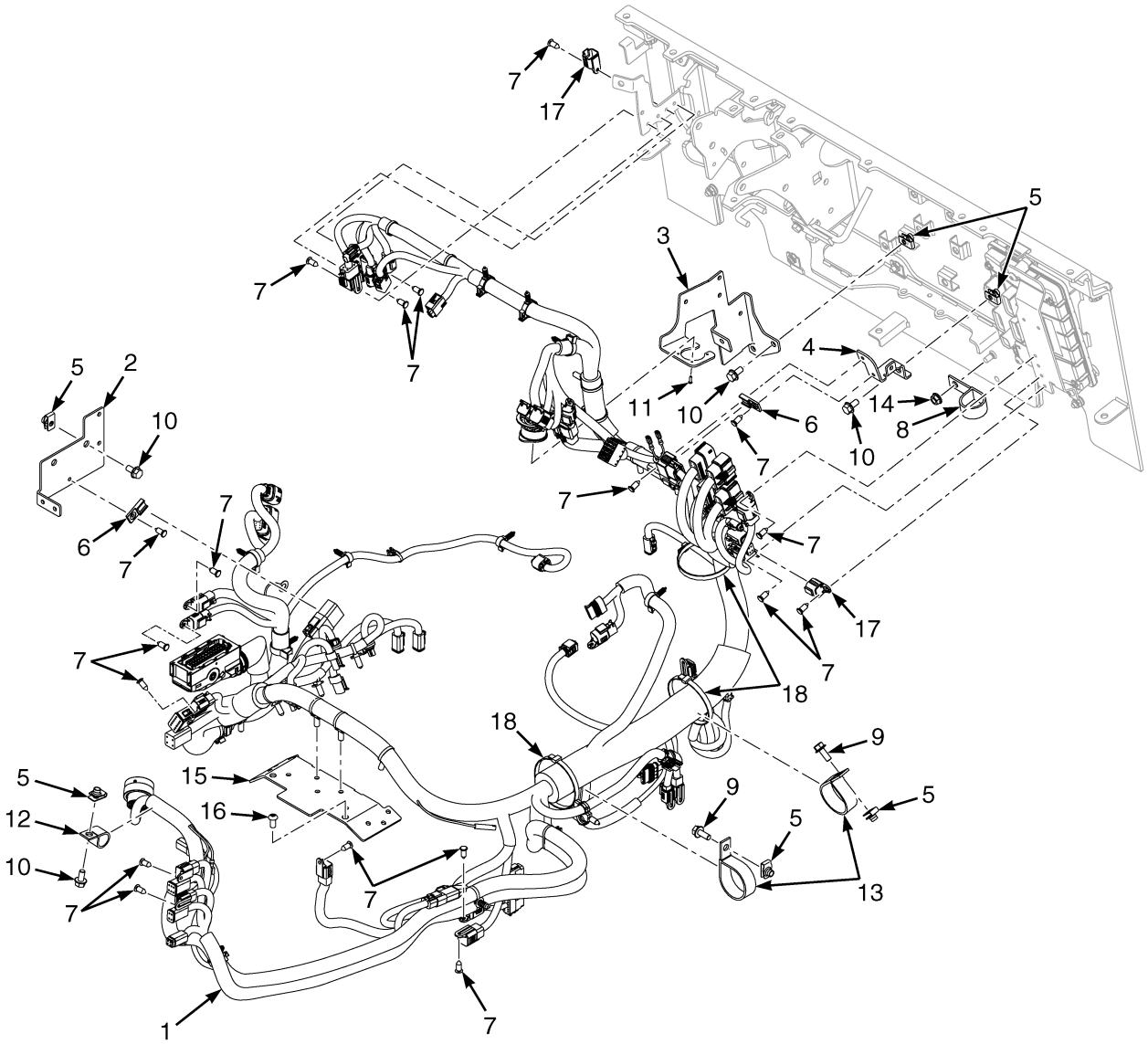

BP083653

©2026 HYSTER COMPANY

HARNESS RETENTION
SINGLE SPEED TRANSMISSION

KEY:
A: Powershift and Diesel IDI (Base Option)
B: Powershift (Mid Option)
C: Powershift and Diesel IDI (Full Option)

ITEM	PART NO.	DESCRIPTION	QTY A	QTY B	QTY C
1	. . . . .	Chassis Wire Harness	1	1	1
2	4313431	Bracket (Retention)	1	1	1
3	4313428	Bracket - Chassis Harness Mounting	1	1	1
4	4315803	Bracket (E-Hyd Interconnection)	..	..	1
5	1480237	Nut (Foldover)	7	7	8
6	1500912	Clip (Powershift)	..	1	2
6	1500912	Clip (Diesel IDI)	..	..	3
7	1582464	Fastener	6	13	18
8	4285480	Clamp	1	1	1
9	1527880	Capscrew	2	2	2
10	~~4109993~~				
	1527879	Capscrew	5	5	6
11	4244155	Screw	4	4	4
12	113341	Clamp	1	..	..
12	101625	Clamp	..	1	1
13	258590	Clamp	2	..	..
13	313221	Clamp	..	2	2
14	~~1382472~~				
	1502543	Nut	1	1	1
15	4248254	Plate - Harness Cover	1	1	1
16	4120965	Screw	2	2	2
17	**a** 4036523	Cap	2	2	2
18	129563	Strap Clamp	3	3	3

FOOTNOTES:

a For use without front work lights.

HARNESS RETENTION (FIGURE 11-40)
STEER COLUMN — WITH ANCILLARY PARTS

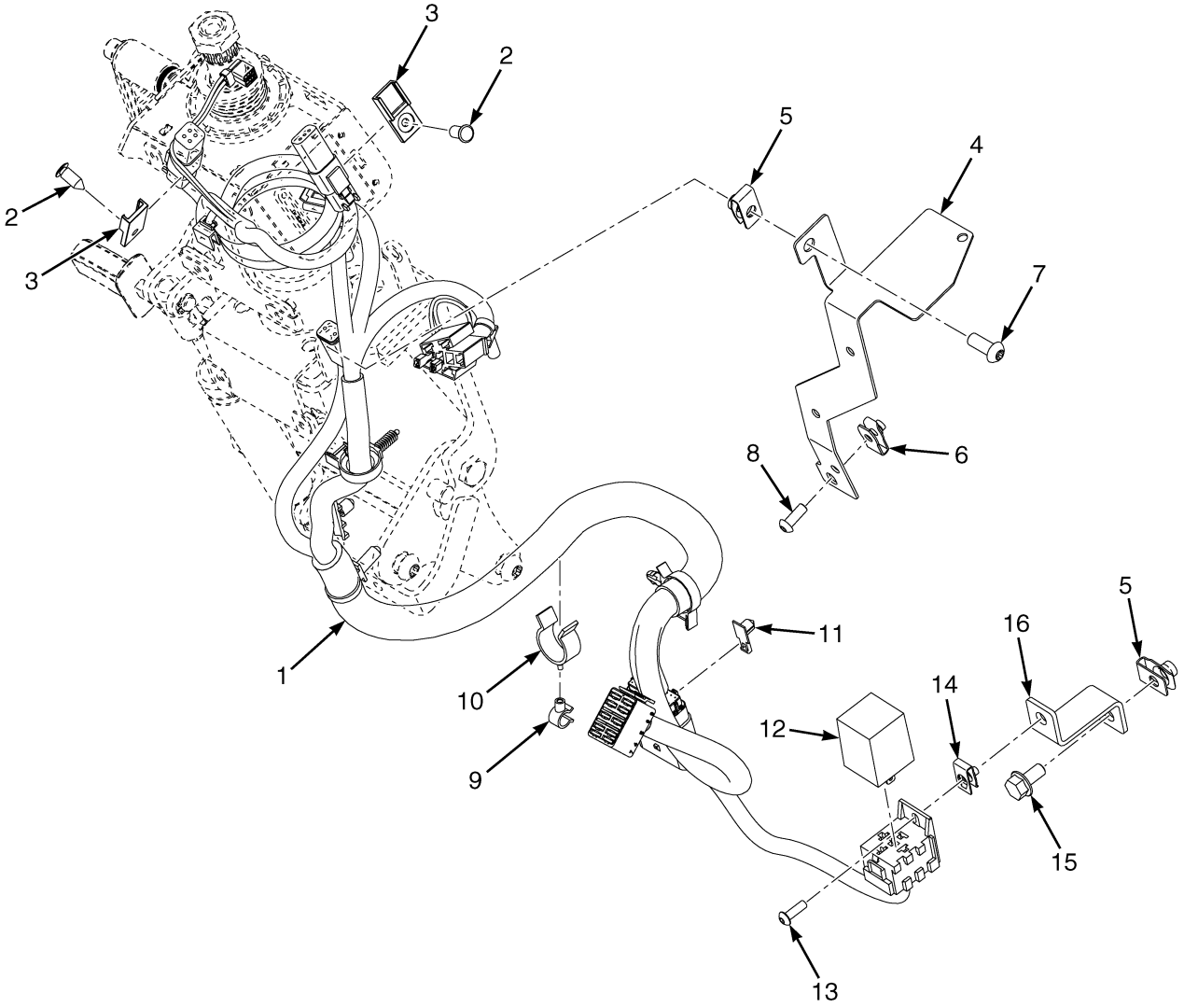

BP083395

©2026 HYSTER COMPANY

HARNESS RETENTION

STEER COLUMN – WITH ANCILLARY PARTS

KEY:
A: Base (Turn/Sync)
B: Base (Horn/Key)
C: Full Levers
D: Full Levers/Sync

ITEM	PART NO.	DESCRIPTION	QTY A	QTY B	QTY C	QTY D
1	4694820	Wire Harness - Column (Base Levers/Sync) (☞Figure 11-103)	1	..	..	..
1	4694819	Wire Harness - Column (Base Horn/Keys) (☞Figure 11-103)...	..	1	..	..
1	4694821	Wire Harness - Column (Full Levers) (☞Figure 11-105).....	..	..	1	..
1	4694822	Wire Harness - Column (Full Levers/Sync) (☞Figure 11-105)...	..	..	..	1
2	1582464	Fastener	2	..	3	3
3	1500912	Clip	2	..	3	3
4	4694861	Bracket - Column Harness	1	1	1	1
5	1480237	Nut (Foldover)	2	1	1	1
6	1566420	Nut (Foldover)	1	1	1	1
7	1529990	Screw	1	1	1	1
8	1510126	Screw (Button Head)	1	1	1	1
9	1561871	Clamp (Swivel)	1	1	1	1
10	1502056	Clamp (Swivel)	1	1	1	1
11	4280612	Connector (Mounting Clip)	1	1	1	1
12	1694442	Flasher (Flashing Relay)	1	..	..	..
13	296153	Capscrew	1	..	..	..
14	4019192	Clip , Nut	1	..	..	..
15	~~4109993~~					
	1527879	Capscrew	1	..	..	..
16	4303782	Bracket - Flasher Relay	1	..	..	..

HEADLINER ROCKER SWITCH ARRANGEMENT (FIGURE 11-41)
WITH DOME LIGHT

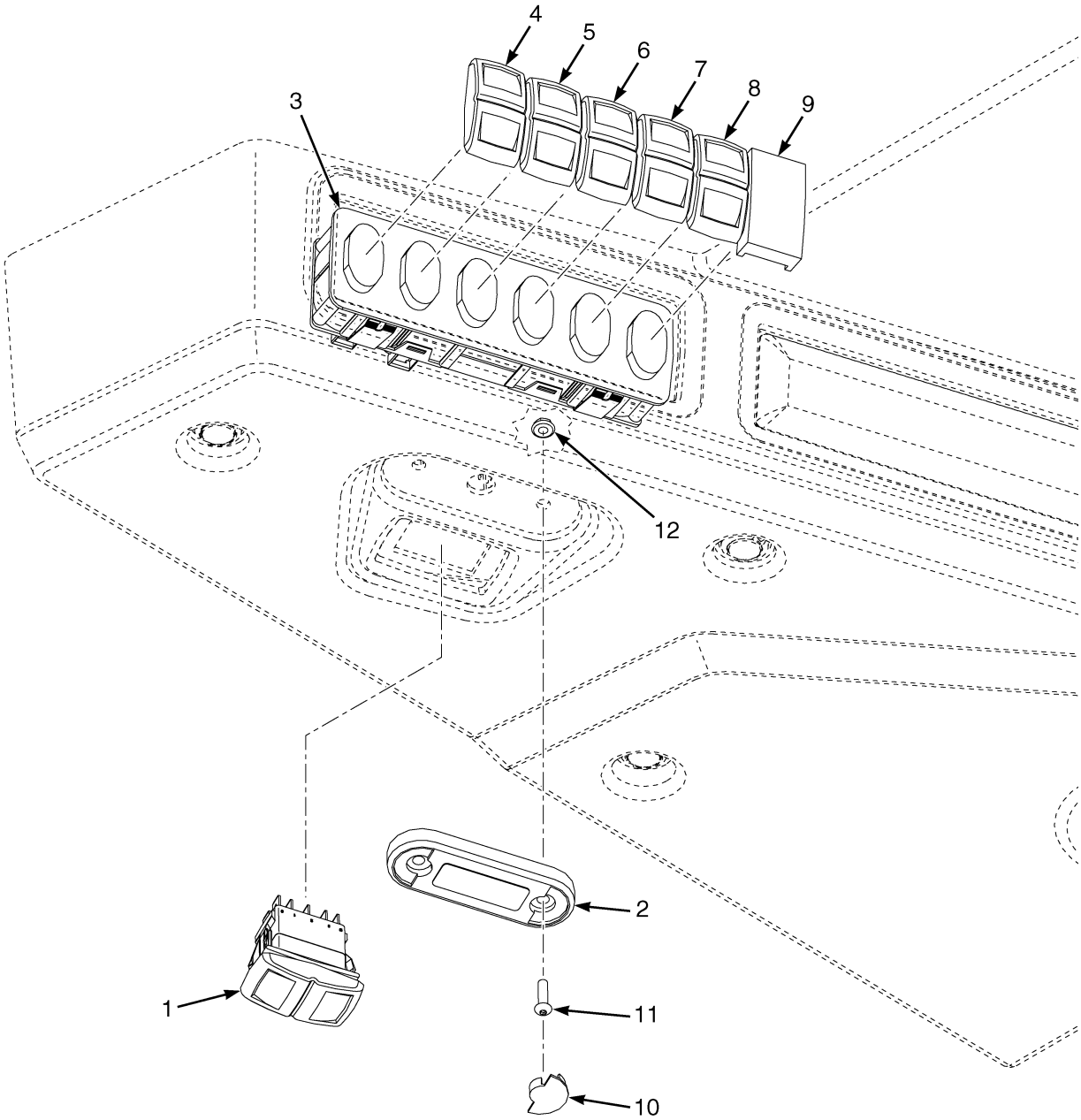

BP083189

©2026 HYSTER COMPANY

ITEM	PART NO.	DESCRIPTION	QTY
1	4696720	Switch - Dome Light	1
2	4708119	Dome Light	1
3	~~4703266~~		
	4716339	Console - 6 bank control module - Cab	1
4	~~4696728~~		
	4717832	Rocker - Front Wiper	1
4	4696723	Rocker - Blank (Optional)	1
5	4696729	Rocker - Washer / Single Wiper	1
5	4696723	Rocker - Blank (Optional)	1
6	~~4696730~~		
	4717833	Rocker - Top Wiper	1
6	4696723	Rocker - Blank (Optional)	1
7	4696731	Rocker - Rear Wiper / Washer	1
7	4696723	Rocker - Blank (Optional)	1
8	4696732	Rocker - Heated Screen	1
8	4696723	Rocker - Blank (Optional)	1
9	4703273	Rocker - Rear Heated	1
9	4696723	Rocker - Blank (Optional)	1
10	4708120	Dome Light (Cover)	2
11	4209005	Screw	2
12	1549398	Nut	2

©2026 HYSTER COMPANY

HORN (FIGURE 11-42)

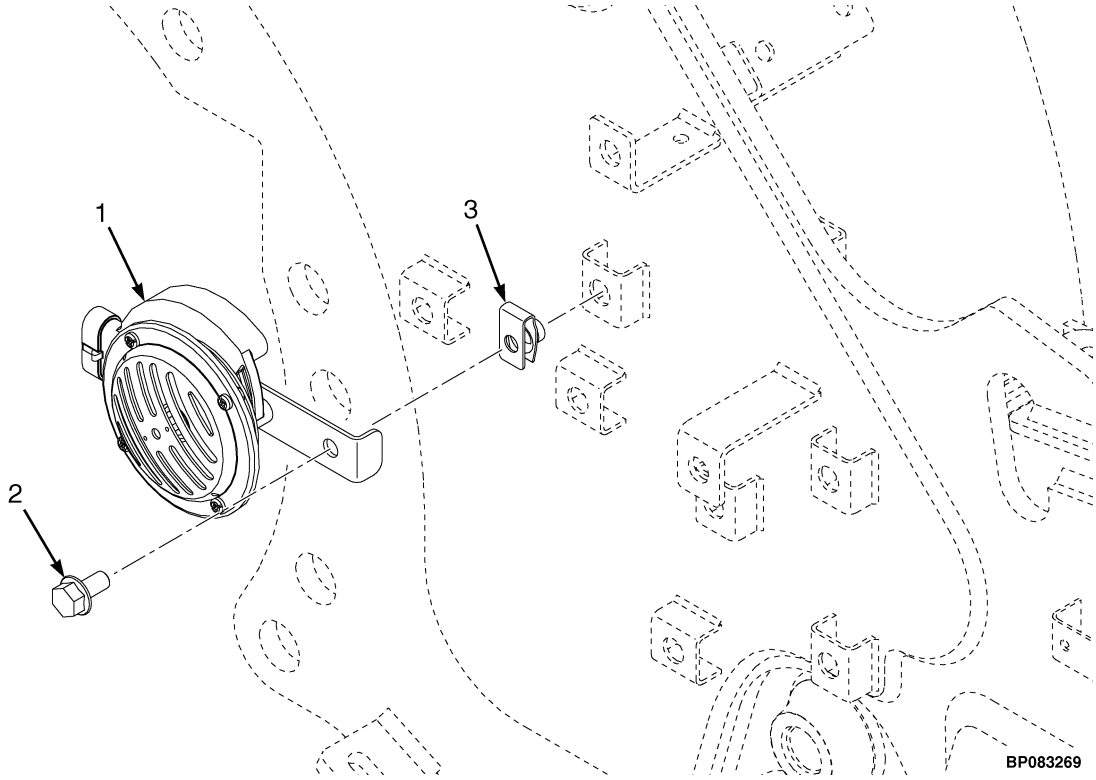

ITEM	PART NO.	DESCRIPTION	QTY
1	4697609	Horn	1
2	~~4109993~~		
	1527879	Capscrew	1
3	1480237	Nut (Foldover)	1

See Service Manual for service procedures.
©2026 HYSTER COMPANY

IMPACT SENSOR (FIGURE 11-43)

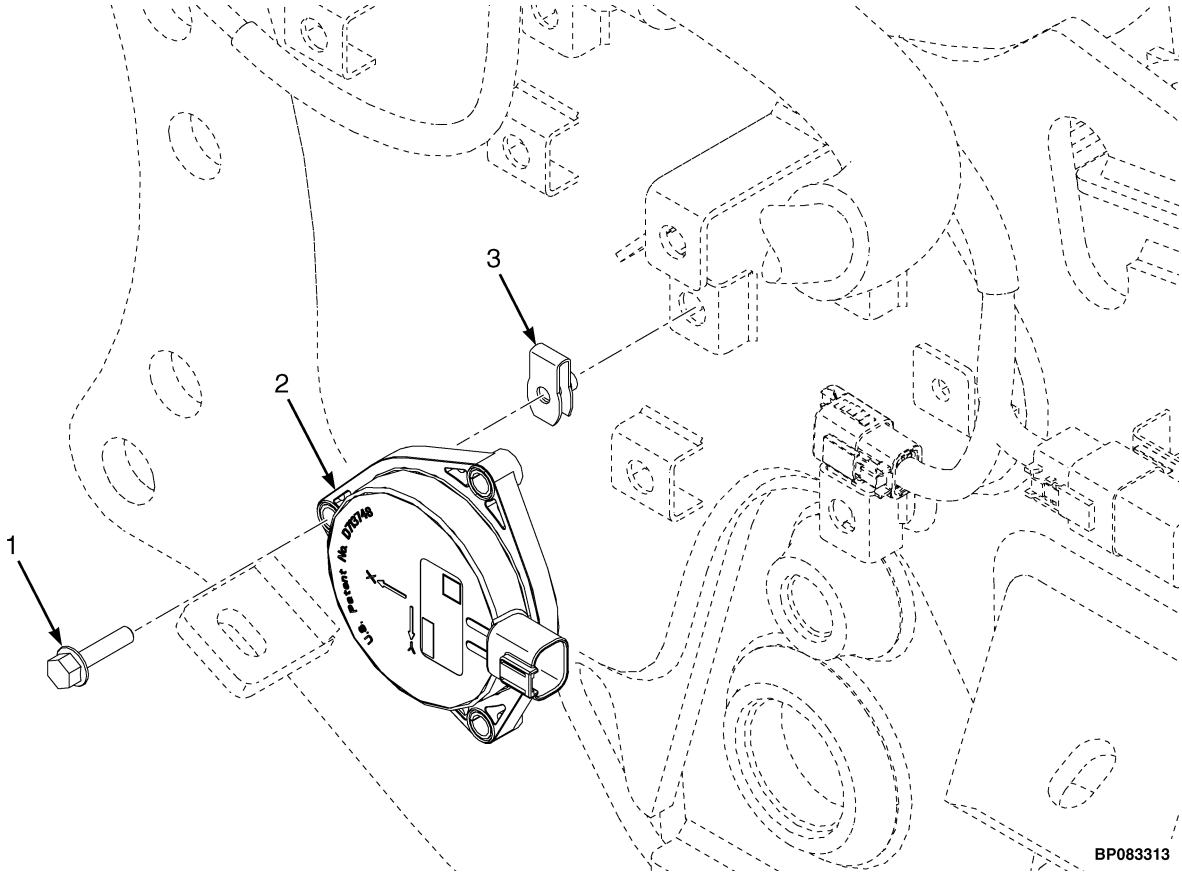

ITEM	PART NO.	DESCRIPTION	QTY
1	1527878	Capscrew	3
2	4656771	Controller (Impact Sensor)	1
3	1566420	Nut (Foldover)	3

JOYSTICK ASSEMBLY (FIGURE 11-44)

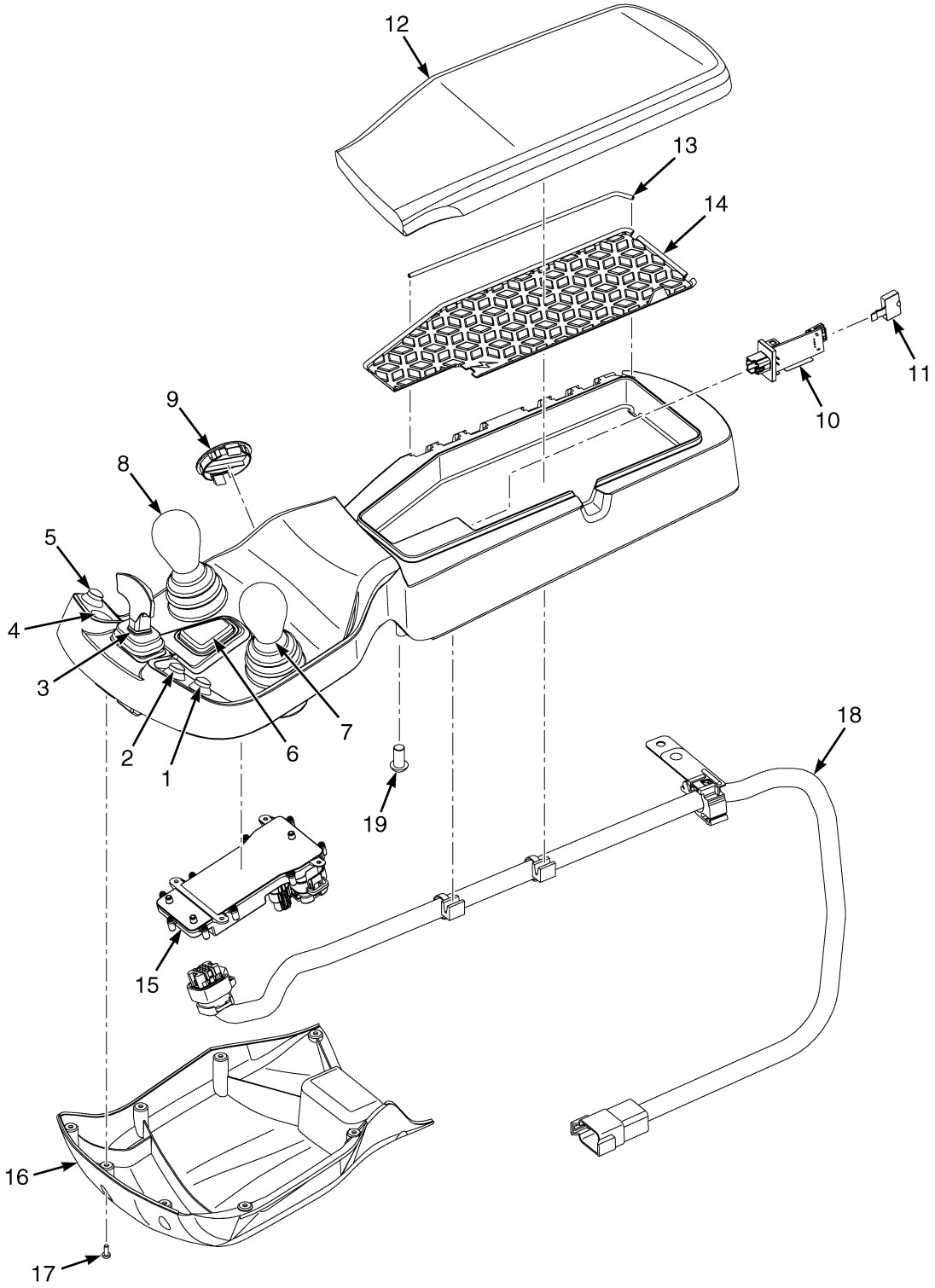

©2026 HYSTER COMPANY

JOYSTICK ASSEMBLY

KEY:
A: 3 Function
B: 4 Function

ITEM	PART NO.	DESCRIPTION	QTY A	QTY B
	4690129	Joystick (3 Function)	1	..
	4690131	Joystick (3 Function w/ Clamping)	1	..
	4690133	Joystick (3 Function w/ RTST)	1	..
	4690135	Joystick (3 Function w/ Clamping w/ RTST)	1	..
	4690137	Joystick (3 Function w/ DCS)	1	..
	4690139	Joystick (3 Function w/ Clamp w/ DCS)	1	..
	4690141	Joystick (3 Function w/ RTST w/ DCS)	1	..
	4690228	Joystick (3 Function w/ Clamp w/ RTST w/ DCS)	1	..
	4690130	Joystick (4 Function)	..	1
	4690132	Joystick (4 Function w/ Clamp)	..	1
	4690134	Joystick (4 Function w/ RTST)	..	1
	4690136	Joystick (4 Function w/ Clamp w/ RTST)	..	1
	4690138	Joystick (4 Function w/ DCS)	..	1
	4690140	Joystick (4 Function w/ Clamp w/ DCS)	..	1
	4690142	Joystick (4 Function w/ RTST w/ DCS)	..	1
	4690144	Joystick (4 Function w/ Clamp w/ RTST w/ DCS)	..	1
	4690153	Joystick - Shelf Select (3 Function)	1	..
	4690154	Joystick - Shelf Select (3 Function w/ DCS)	1	..
	4690155	Joystick - Shelf Select (4 Function)	..	1
	4690156	Joystick - Shelf Select (4 Function w/ DCS)	..	1
	4690159	Joystick - Shelf Select (3 Function w/ RTST)	1	..
	4690160	Joystick - Shelf Select (3 Function w/ DCS w/ RTST)	1	..
	4690161	Joystick - Shelf Select (4 Function w/ RTST)	..	1
	4690162	Joystick - Shelf Select (4 Function w/ DCS w/ RTST)	..	1
	4690165	Joystick - Shelf Select (3 Function w/ Clamp)	1	..
	4690166	Joystick - Shelf Select (3 Function w/ DCS w/ Clamp)	1	..
	4690167	Joystick - Shelf Select (4 Function w/ Clamp)	..	1
	4690168	Joystick - Shelf Select (4 Function w/ DCS w/ Clamp)	..	1
	4690171	Joystick - Shelf Select (3 Function w/ RTST w/ Clamp)	1	..
	4690172	Joystick - Shelf Select (3 Function w/ DCS w/ RTST w/ Clamp)	1	..
	4690173	Joystick - Shelf Select (4 Function w/ RTST w/ Clamp)	..	1
	4690174	Joystick - Shelf Select (4 Function w/ DCS w/ RTST w/ Clamp)	..	1
	a 4702668	Wire Harness (w/ DCS)	1	1
	a 4702669	Wire Harness (w/ DCS w/ Pushbuttons)	1	1
1	. . . . .	Pushbutton Position 1	1	1
1	4701721	Button - Momentary (Shelf Select)	1	1
1	1669009	Plug	1	1
2	. . . . .	Pushbutton Position 2	1	1
2	4701721	Button - Momentary (w/ RTST)	1	1
2	1669009	Plug (w/o RTST)	1	1
3	4702043	Switch - DCS Joystick (w/ DCS)	1	1
3	4702664	Plug (w/o DCS)	1	1
4	. . . . .	Pushbutton Position 3	1	1
4	1705359	Cover (Push Button)	1	1
5	. . . . .	Pushbutton Position 4	1	1
5	4701721	Button - Momentary (w/ Clamping)	1	1

©2026 HYSTER COMPANY

JOYSTICK ASSEMBLY

KEY:
A: 3 Function
B: 4 Function

ITEM	PART NO.	DESCRIPTION	QTY A	QTY B
5	1669009	Plug (w/o Clamping)	1	1
6	4702044	Horn Button	1	1
7	. . . . .	Joystick Position 1	1	1
7	4702661	Joystick	1	1
8	. . . . .	Joystick Position 2	1	1
8	4702662	Joystick (3 Function)	1	..
8	4702663	Joystick (4 Function)	..	1
9	4601120	Plug	1	1
10	4695241	Module (USB)	1	1
11	4701729	Seal (USB)	1	1
12	4702665	Cushion (Armrest)	1	1
13	4695243	Pin , Hinge	1	1
14	4695242	Mat	1	1
15	4702660	Controller	1	1
16	4702667	Cover	1	1
17	4702671	Screw	9	9
18	4702670	Wire Harness	1	1
18	4742600	Wire Harness (Alternate Part)	1	1
19	4120965	Screw	2	2

FOOTNOTES:

a Not Illustrated

©2026 HYSTER COMPANY

LEVER POSITION MONITORING (FIGURE 11-45)

MANUAL HYDRAULICS — ACCESSORY 1

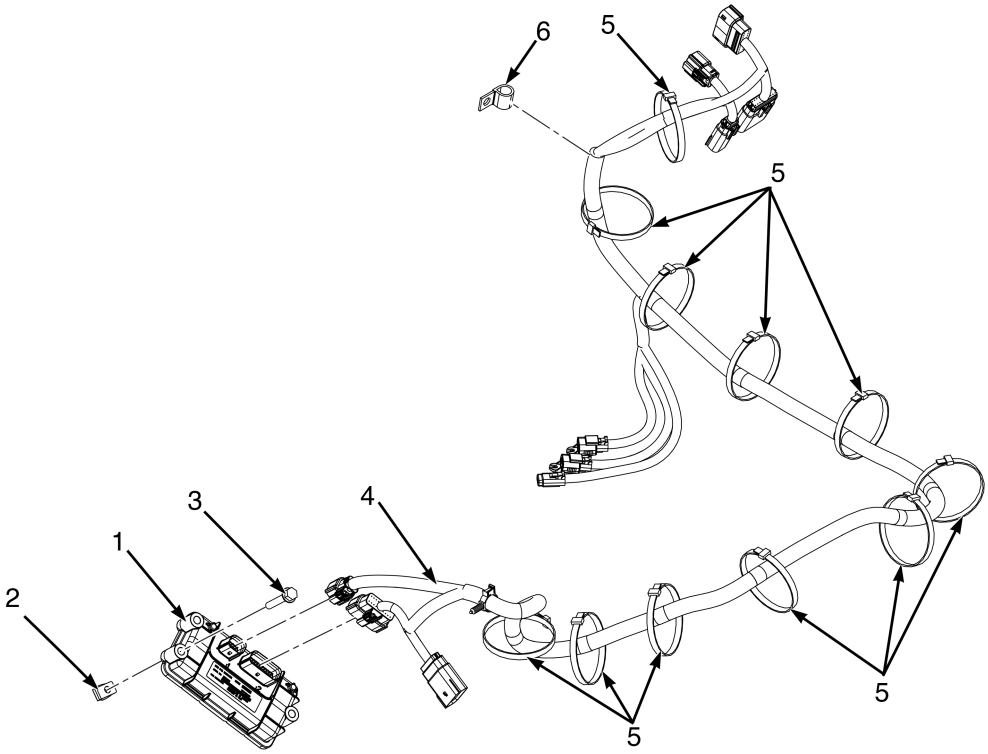

ITEM	PART NO.	DESCRIPTION	QTY
1	4644755	Controller (iBox)	1
2	1480237	Nut (Foldover)	3
3	1527882	Capscrew	3
4	4728710	Wire Harness - M-Hyd SPS Jumper (Mid/Full)	1
4	4728711	Wire Harness - M-Hyd SPS Jumper (Base)	1
5	129563	Strap Clamp	AR
6	4117389	Clamp (Base Harness Only)	1
6	129563	Strap Clamp (Alternate Part)	1

LIFT HEIGHT SENSOR (FIGURE 11-46)

2 STAGE LFL

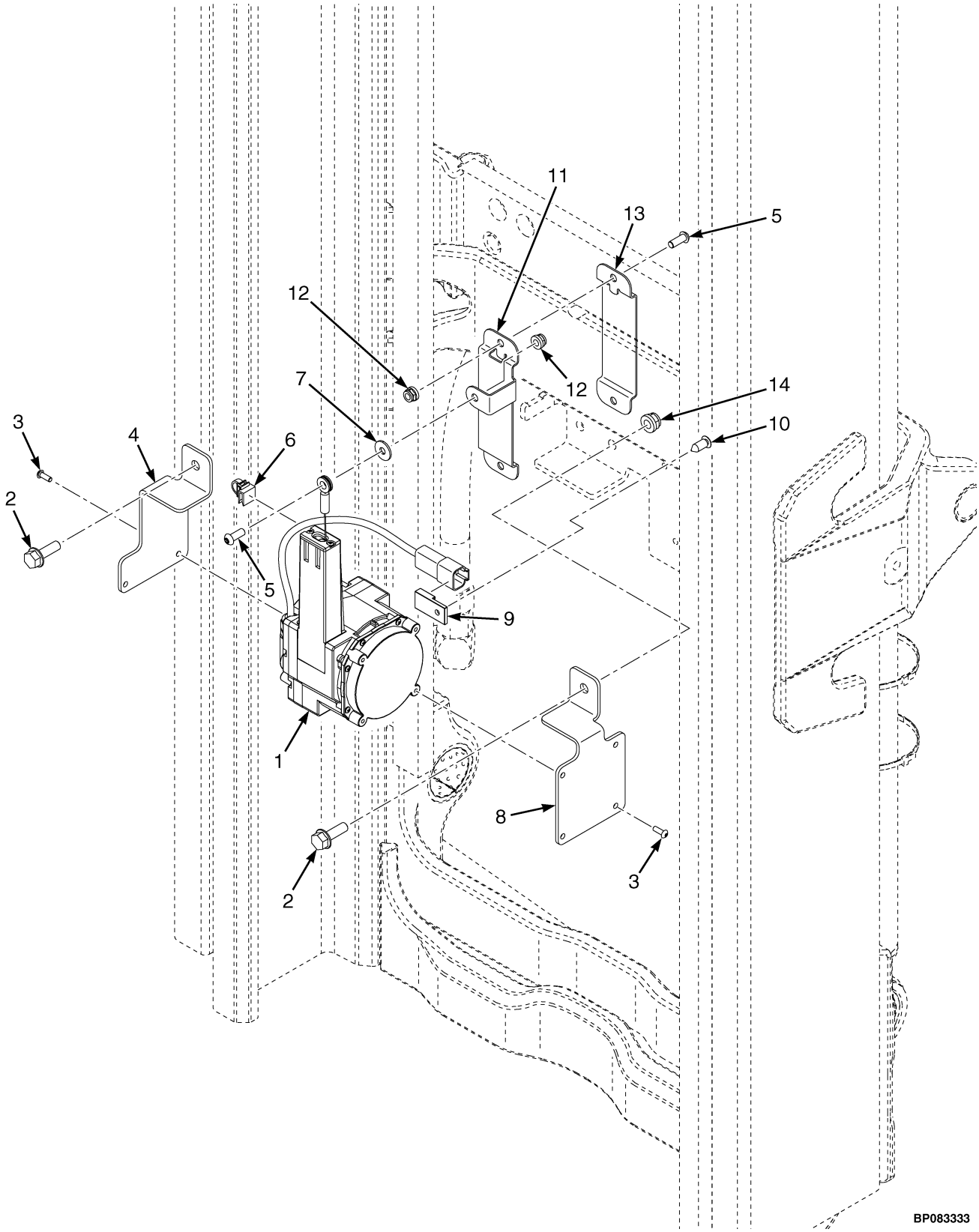

©2026 HYSTER COMPANY

LIFT HEIGHT SENSOR

2 STAGE LFL

ITEM	PART NO.	DESCRIPTION	QTY
1	4701783	Sensor-Mast Height - Continuous	1
2	4185429	Capscrew	2
3	4216684	Screw	7
4	~~4216452~~		
	4383645	Bracket	1
5	4196031	Screw	3
6	4168707	Retainer	1
7	1476421	Washer	1
8	~~4216453~~		
	4383646	Bracket	1
9	1500912	Clip	1
10	1582464	Fastener	1
11	4289366	Bracket - 2 LFL Stringpot	1
12	4187689	Locknut	3
13	4291382	Bracket - 2 LFL Stringpot	1
14	4187690	Locknut	2

©2026 HYSTER COMPANY

LIFT HEIGHT SENSOR (FIGURE 11-47)

2 AND 3 STAGE FFL

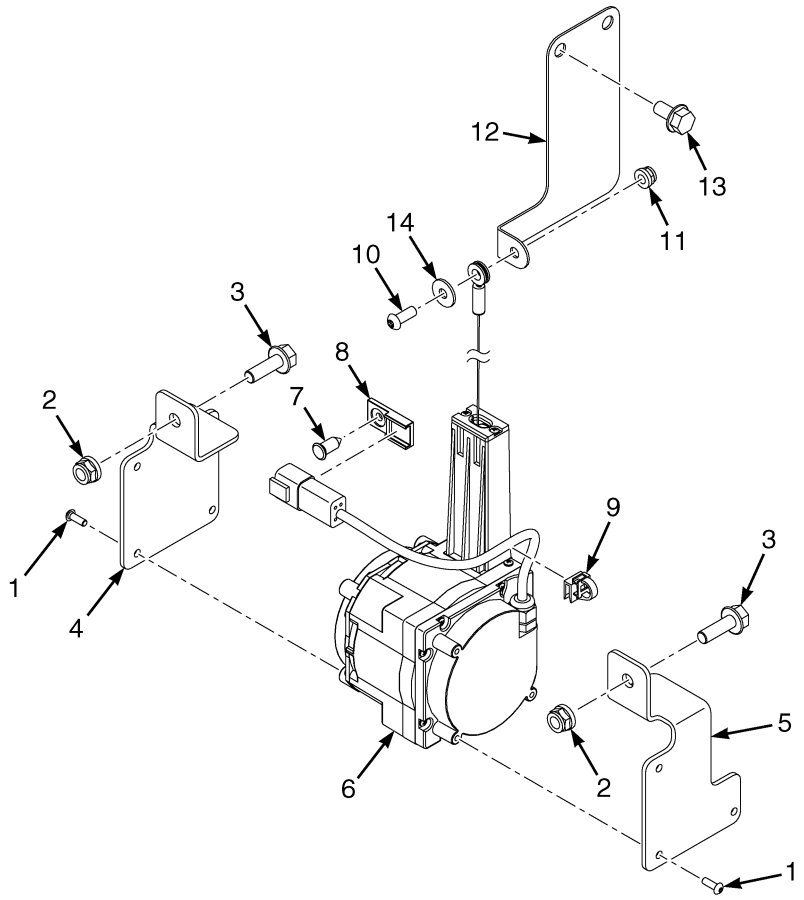

BP083154

ITEM	PART NO.	DESCRIPTION	QTY
1	4216684	Screw	7
2	4187690	Locknut	2
3	4185429	Capscrew	2
4	~~4216453~~		
	4383646	Bracket	1
5	~~4216452~~		
	4383645	Bracket	1
6	4701783	Sensor-Mast Height - Continuous	1
7	1582464	Fastener	1
8	1500912	Clip	1
9	4168707	Retainer	1
10	4196031	Screw	1
11	4187689	Locknut	1
12	4303373	Bracket	1
13	4223693	Capscrew	2
14	1476421	Washer	1

See Service Manual for service procedures.
©2026 HYSTER COMPANY

LIFT HEIGHT SENSOR (FIGURE 11-48)
AND HARNESS — FOUR STAGE FULL FREE-LIFT

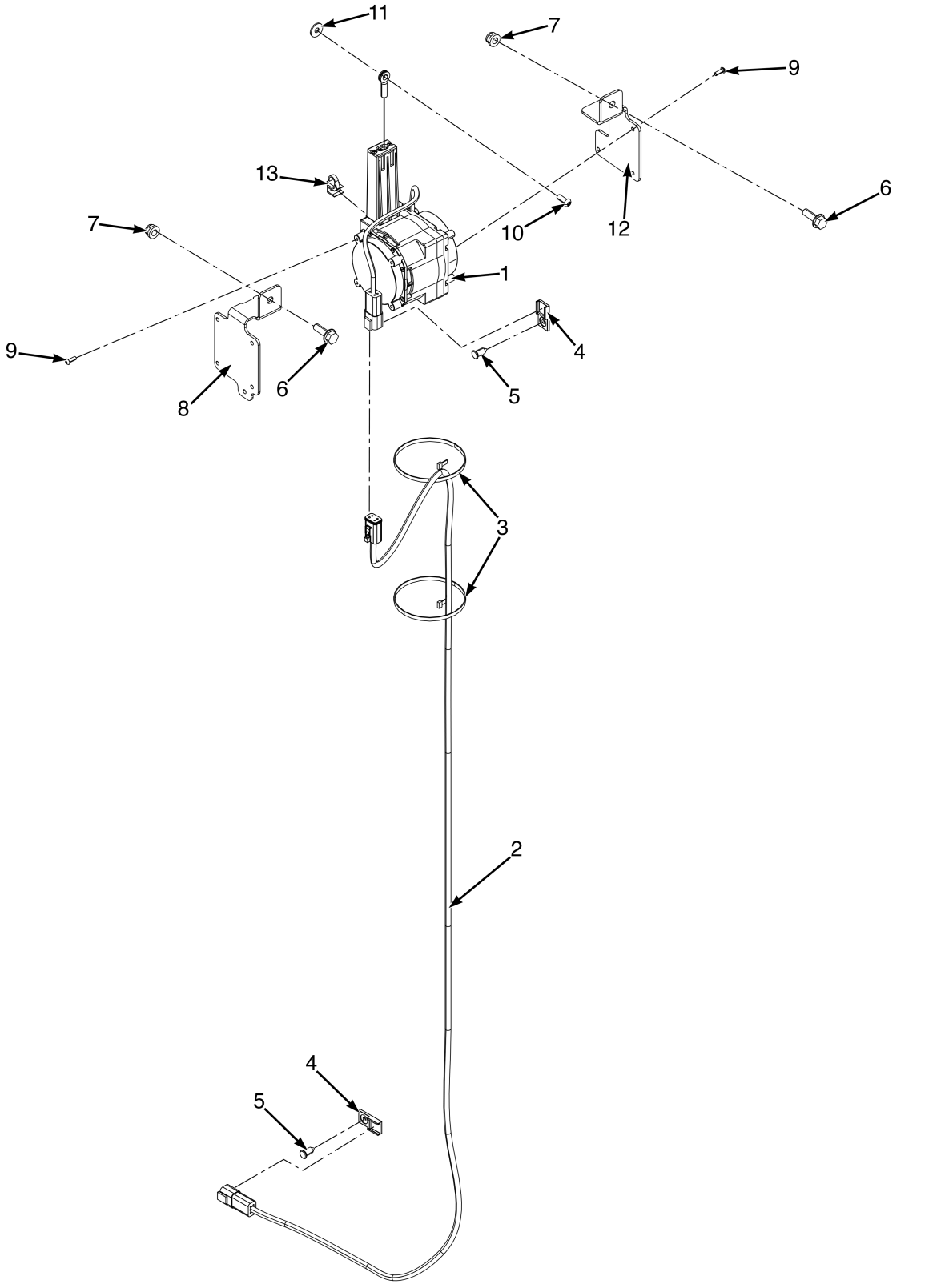

ITEM	PART NO.	DESCRIPTION	QTY
1	4701783	Sensor-Mast Height - Continuous	1
2	4720509	Wire Harness (Lift Height Sensor) (Lift Height 6058mm)	1
2	4742750	(Lift Height Sensor) (Lift Height 6058mm) (Alternate Part)	1
2	4720510	Wire Harness (Lift Height Sensor) (Lift Height 6362mm)	1
2	4742751	(Lift Height Sensor) (Lift Height 6362mm) (Alternate Part)	1
2	4720511	Wire Harness (Lift Height Sensor) (Lift Height 6220 and 6669mm)	1
2	4742752	(Lift Height Sensor) (Lift Height 6220 and 6669mm) (Alternate Part)	1
2	4720512	Wire Harness (Lift Height Sensor) (Lift Height 6970mm)	1
2	4742753	(Lift Height Sensor) (Lift Height 6970mm) (Alternate Part)	1
3	2004005	Strap Clamp (Lift Height 6058mm)	2
3	2004005	Strap Clamp (Lift Height 6362 and 6669mm)	3
3	2004005	Strap Clamp (Lift Height 6970mm)	4
4	1500912	Clip	2
5	1582464	Fastener	2
6	4185429	Capscrew	2
7	4187690	Locknut	2
8	4224939	Bracket	1
9	4216684	Screw	7
10	4196031	Screw	1
11	1476421	Washer	1
12	~~4216452~~		
	4383645	Bracket	1
13	4168707	Retainer	1

See Service Manual for service procedures.
©2026 HYSTER COMPANY

LIFT HEIGHT SENSOR (FIGURE 11-49)

DISCRETE

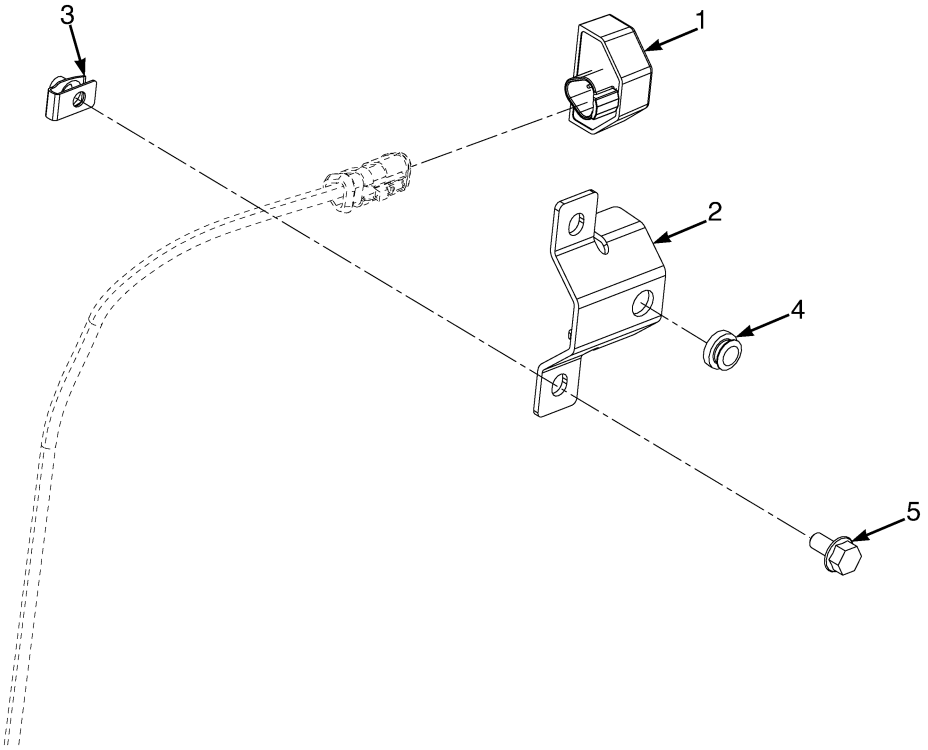

ITEM	PART NO.	DESCRIPTION	QTY
1	~~4693225~~		
	4714773	Sensor-Mast Height	1
2	4332602	Bracket	1
3	1480237	Nut (Foldover)	2
4	4332603	Bumper	1
5	4223693	Capscrew	2

LIGHTS (FIGURE 11-50)
RED LINE — WITH REAR WORK LIGHT

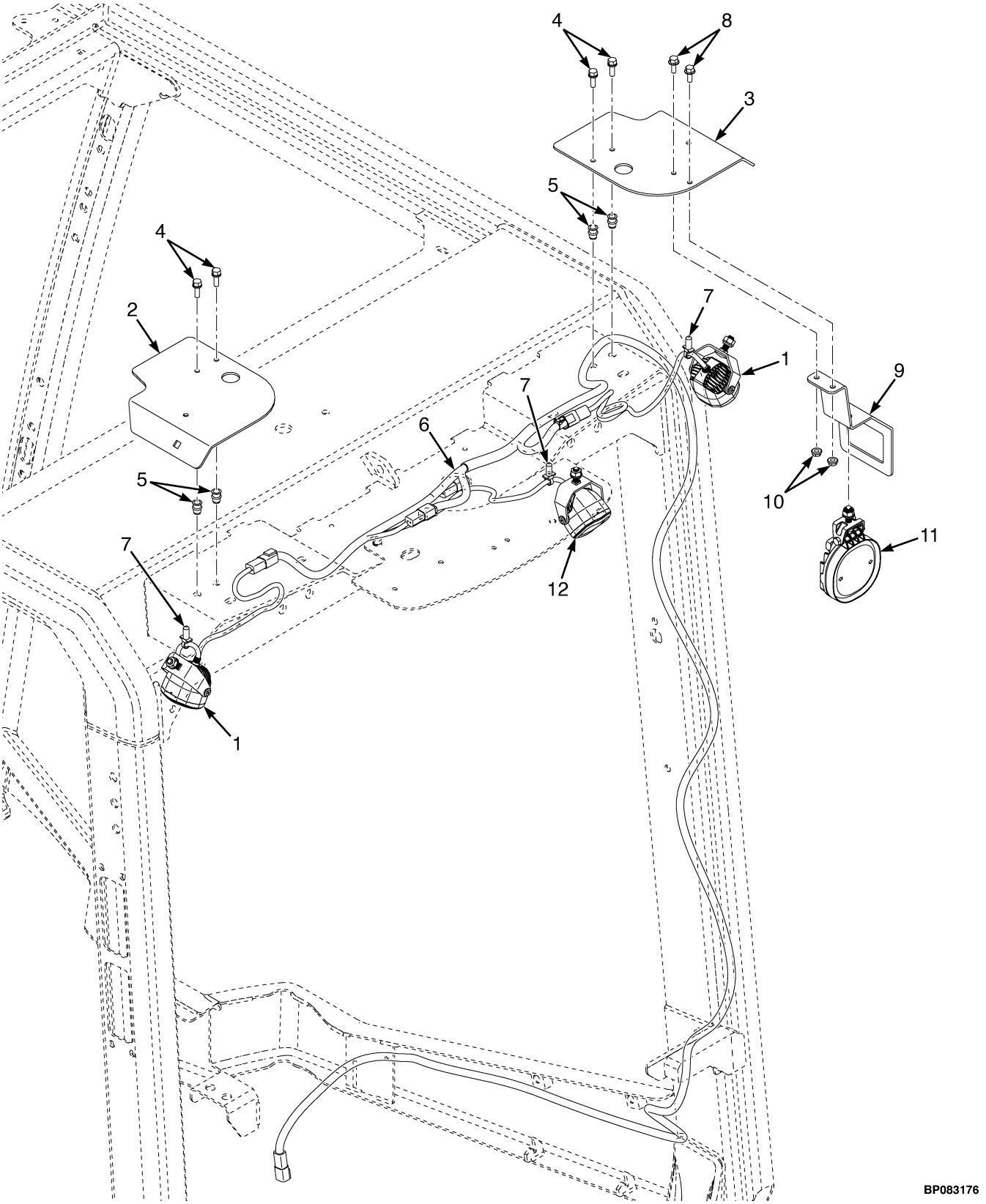

©2026 HYSTER COMPANY

ITEM	PART NO.	DESCRIPTION	QTY
1	4244814	Warning Light - Red Line Pedestrian Awareness Light (LH and RH)	2
1	4355597	Warning Light - Red Line Pedestrian Awareness Light (LH and RH) (Alternate Part)	2
2	4270355	Bracket - LH Red Line	1
3	4270356	Bracket - RH Red Line	1
3	4336428	Bracket (Rear Worklight w/ rediline)	1
3	4371779	Bracket (Rear Work Light) (w/ Red line) (Manufacturing Option)	1
3	4371933	Bracket (Rear Work Light) (w/o Redline) (Manufacturing Option)	1
4	4309801	Screw (Fig 8 OHG and Manufacturing Option)	4
4	4196031	Screw (Rect OHG)	4
5	1531001	Insert (Fig 8 OHG and Manufacturing Option)	4
5	1531558	Insert (Rect OHG)	4
6	4691709	Wire Harness - Pedestrian Awareness Line (Fig 8 OHG)	1
6	4698341	Wire Harness - Pedestrian Awareness Line (Fig 8 OHG) (Alternate Part)	1
6	4698341	Wire Harness - Pedestrian Awareness Line (Rect OHG) (☞Figure 11-122)	1
7	4140361	Cable Clip	3
8	~~4111055~~		
	1527876	Capscrew	2
9	4270357	Bracket - Rear Work Light w/ Red Line	1
10	~~1307884~~		
	1514429	Nut	2
11	4650809	Head/Work Light (Rear LED)	1
11	81018880	Head/Work Light (Rear LED) (Alternate Part)	1
11	4694139	Head/Work Light - Rear, LED, 1100 Lumen	1
11	81018881	Head/Work Light (Rear LED, 1100 lumens) (Alternate Part)	1
11	2098083	Work Light (Rear, Includes Hardware)	1
12	4244814	Warning Light - Red Line Pedestrian Awareness Light (Rear)	1
12	4355593	Warning Light - Red Line Pedestrian Awareness Light (Rear) (Alternate Part)	1

LIGHTS (FIGURE 11-51)
SPOT LIGHTS AND STROBE

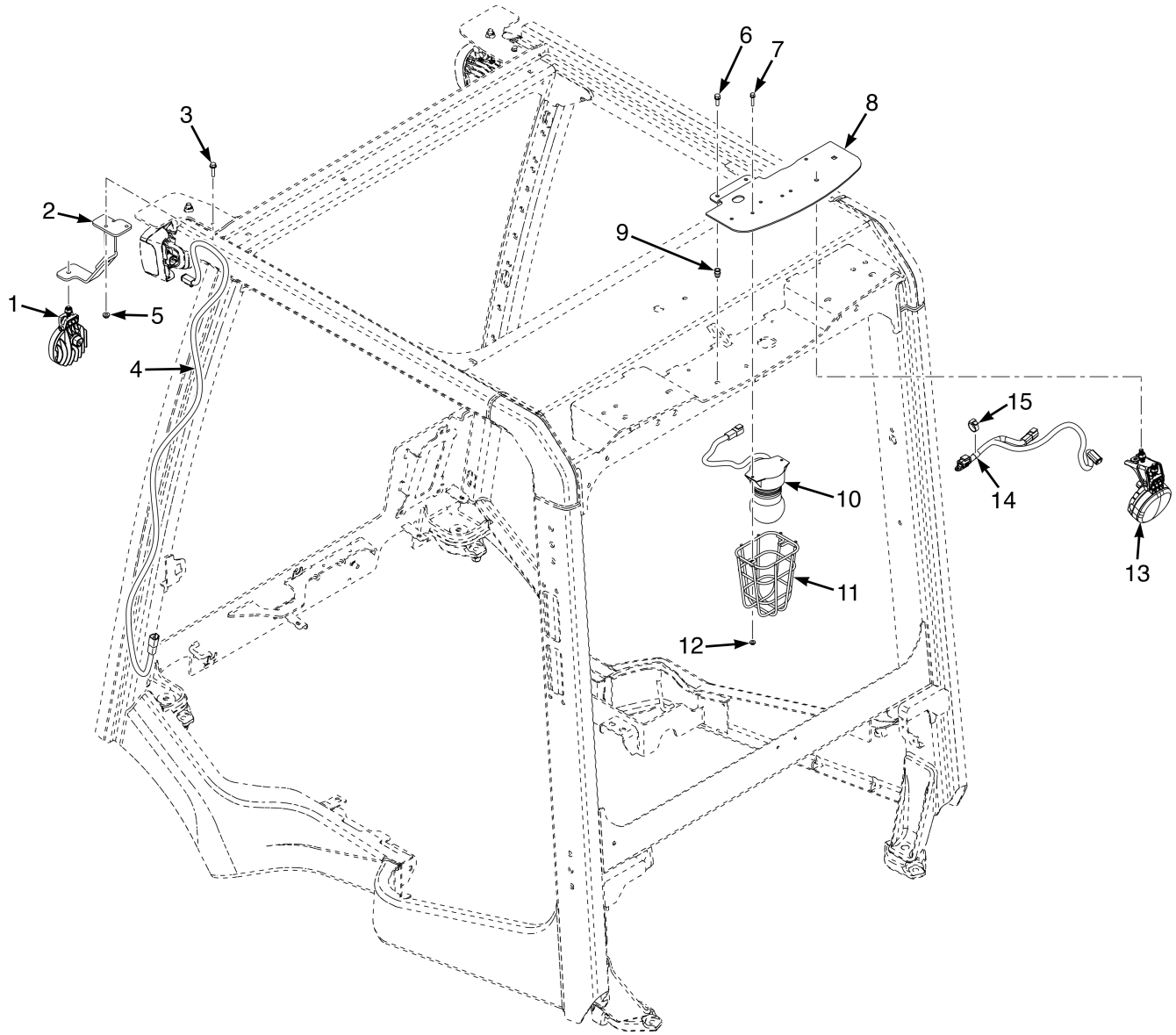

BP083095

©2026 HYSTER COMPANY

LIGHTS

SPOT LIGHTS AND STROBE

ITEM	PART NO.	DESCRIPTION	QTY
1	4695009	Warning Light , Red LED	1
1	4695011	Warning Light , Blue LED	1
2	4297802	Bracket	1
3	4309801	Screw	2
4	4691710	Wire Harness - Front Spot Light	1
4	4720947	Wire Harness - Front Blue or Red Spot Light (Alternate Part)	1
5	1586429	Metric Nut	2
6	4309801	Screw	3
7	4309800	Screw	2
8	4270353	Bracket - Single Light Mounting	1
8	4280219	Bracket - Multiple Light Mounting	1
8	4719585	Bracket - Multiple Light Mounting (Alternate Part)	1
9	1531001	Insert	3
10	1654013	Strobe Light Assembly	1
10	1652290	Strobe Light (Amber LED)	1
11	1302024	Guard (Strobe Light)	1
12	4309806	Nut	2
13	4695011	Warning Light , Blue LED	1
13	4695009	Warning Light , Red LED	1
14	**a** 4728635	Wire Harness - Rear Spotlight (Continuous Power Option)	1
15	**a** 129563	Strap Clamp	3

FOOTNOTES:

a Continuous Power Option only

LIGHT (FIGURE 11-52)

STROBE LIGHT — MANUFACTURING OPTION

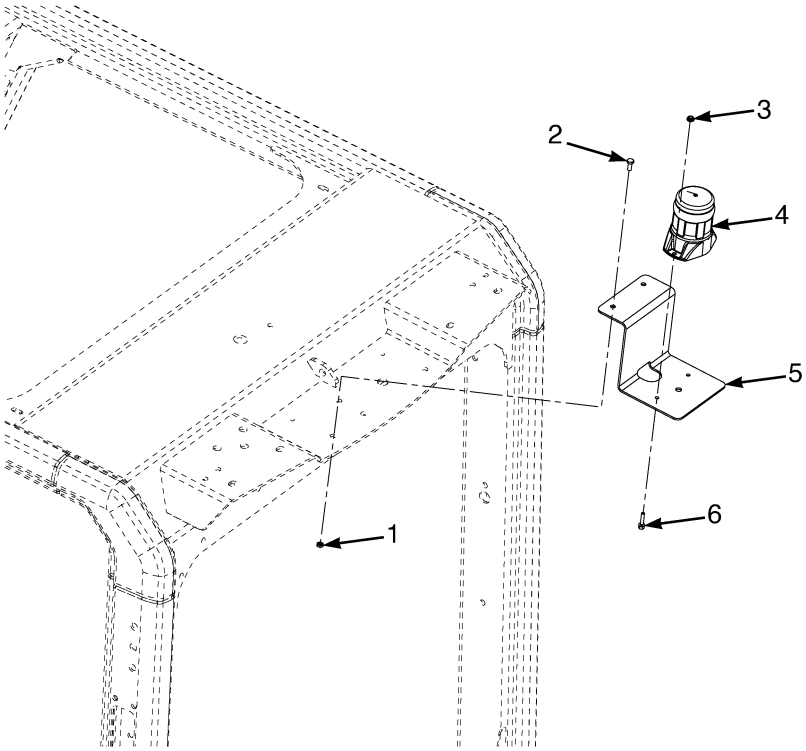

BP084471

ITEM	PART NO.	DESCRIPTION	QTY
1	1593334	Nut	2
2	4043635	Capscrew	2
3	1586428	Nut	2
4	4264187	Strobe Light	1
5	4367254	Bracket (Rear Strobe Light)	1
6	1586759	Capscrew	2

See Service Manual for service procedures.
©2026 HYSTER COMPANY

LIGHTS (FIGURE 11-53)

SPOT LIGHTS — WITHOUT WORK LIGHTS OR MARKER

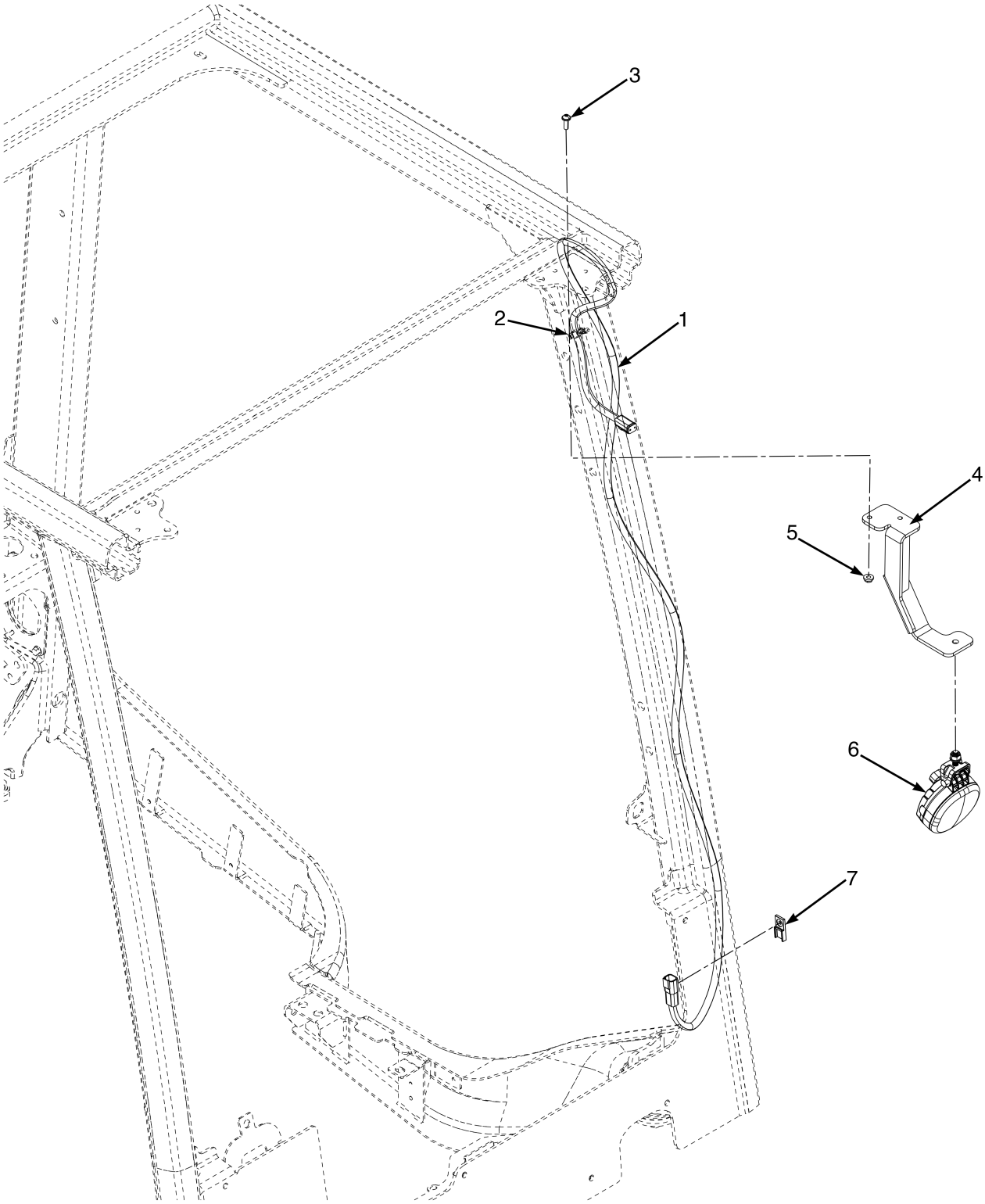

BP084081

ITEM	PART NO.	DESCRIPTION	QTY

ITEM	PART NO.	DESCRIPTION	QTY
1	4720947	Wire Harness - Front Blue or Red Spot Light	1
2	1509888	Clip (Conduit)	1
3	4319033	Screw	2
3	4309801	Screw (Alternate Part)	2
4	4345628	Bracket (Spot Light)	1
5	4309807	Nut	2
6	4695011	Warning Light , Blue LED	1
6	4695009	Warning Light , Red LED	1
7	1500912	Clip	1

©2026 HYSTER COMPANY

LIGHTS (FIGURE 11-54)

WORK LIGHTS — TWO FRONT / ONE REAR

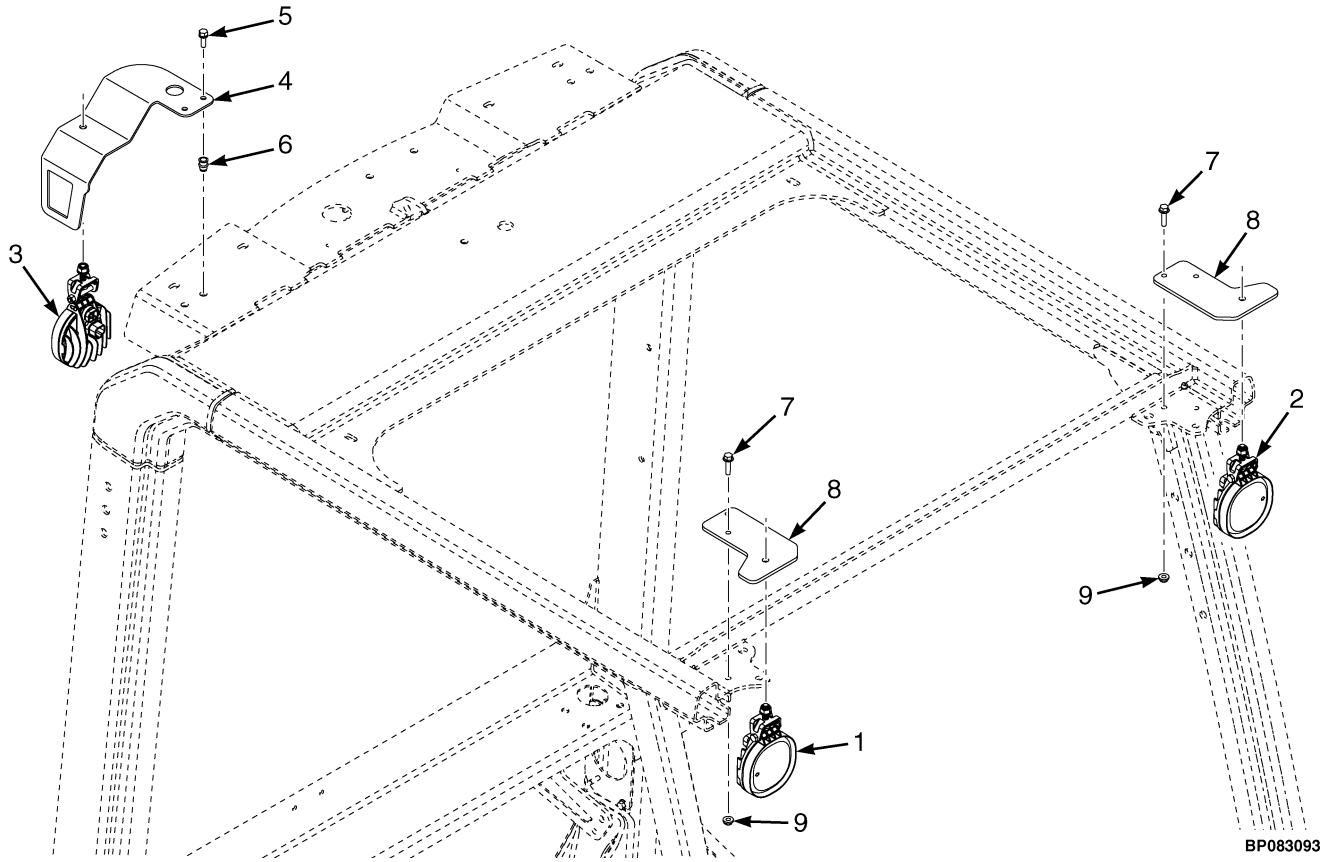

ITEM	PART NO.	DESCRIPTION	QTY
1	4666879	Head/Work Light - Front, LH, LED	1
1	4744953	Head/Work Light - Front, LH, LED (Alternate Part)	1
1	4694464	Head/Work Light - Front, LH, LED, 1100 Lumen	1
1	81018876	Head/Work Light - Front, LH, LED (Alternate Part)	1
1	4729931	Work Light (LED) (Manufacturing Option)	1
1	4686386	Head/Work Light - Front, LH, Halogen	1
2	4666878	Head/Work Light - Front, RH, LED	1
2	4744954	Head/Work Light - Front, RH, LED (Alternate Part)	1
2	4694140	Head/Work Light - Front, RH, LED, 1100 Lumen	1
2	81018877	Head/Work Light - Front, RH, LED (Alternate Part)	1
2	4729931	Work Light (LED) (Manufacturing Option)	1
2	4686387	Head/Work Light - Front, RH, Halogen	1
3	4650809	Head/Work Light (Rear LED) (LED)	1
3	81018880	Head/Work Light (Rear LED) (Alternate Part)	1
3	2098083	Work Light (Rear, Includes Hardware) (Halogen)	1
3	4694139	Head/Work Light - Rear, LED, 1100 Lumen	1
3	81018881	Head/Work Light (Rear LED, 1100 lumens) (Alternate Part)	1
4	4258423	Bracket - Rear Work Light	1
5	1665758	Capscrew	2
5	4309801	Screw (Alternate Part)	2
6	1531001	Insert	2
7	4309801	Screw	4
8	4297801	Bracket	2

ITEM	PART NO.	DESCRIPTION	QTY
8	4371836	Bracket (Front Work Light) (Manufacturing Option)	2
9	4309807	Nut	4

©2026 HYSTER COMPANY

LIGHT (FIGURE 11-55)

REAR WORK LIGHT AIR CONDITIONER MOUNTED — MANUFACTURING OPTION

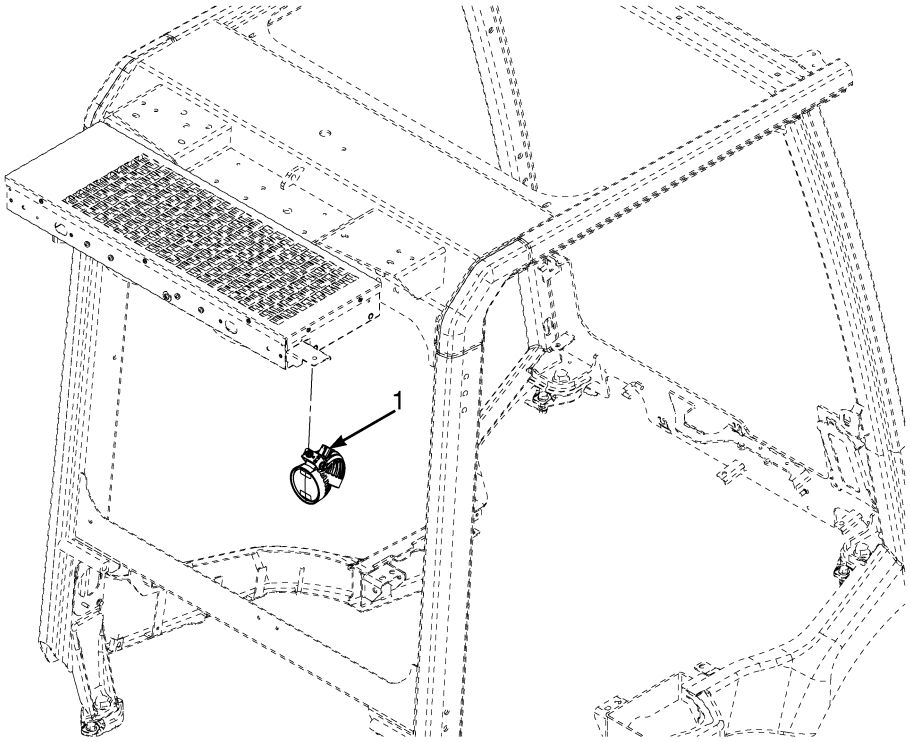

BP084472

ITEM	PART NO.	DESCRIPTION	QTY
1	4729931	Work Light (LED)	1

LIGHTS (FIGURE 11-56)

WORK LIGHTS — FRONT MARKER

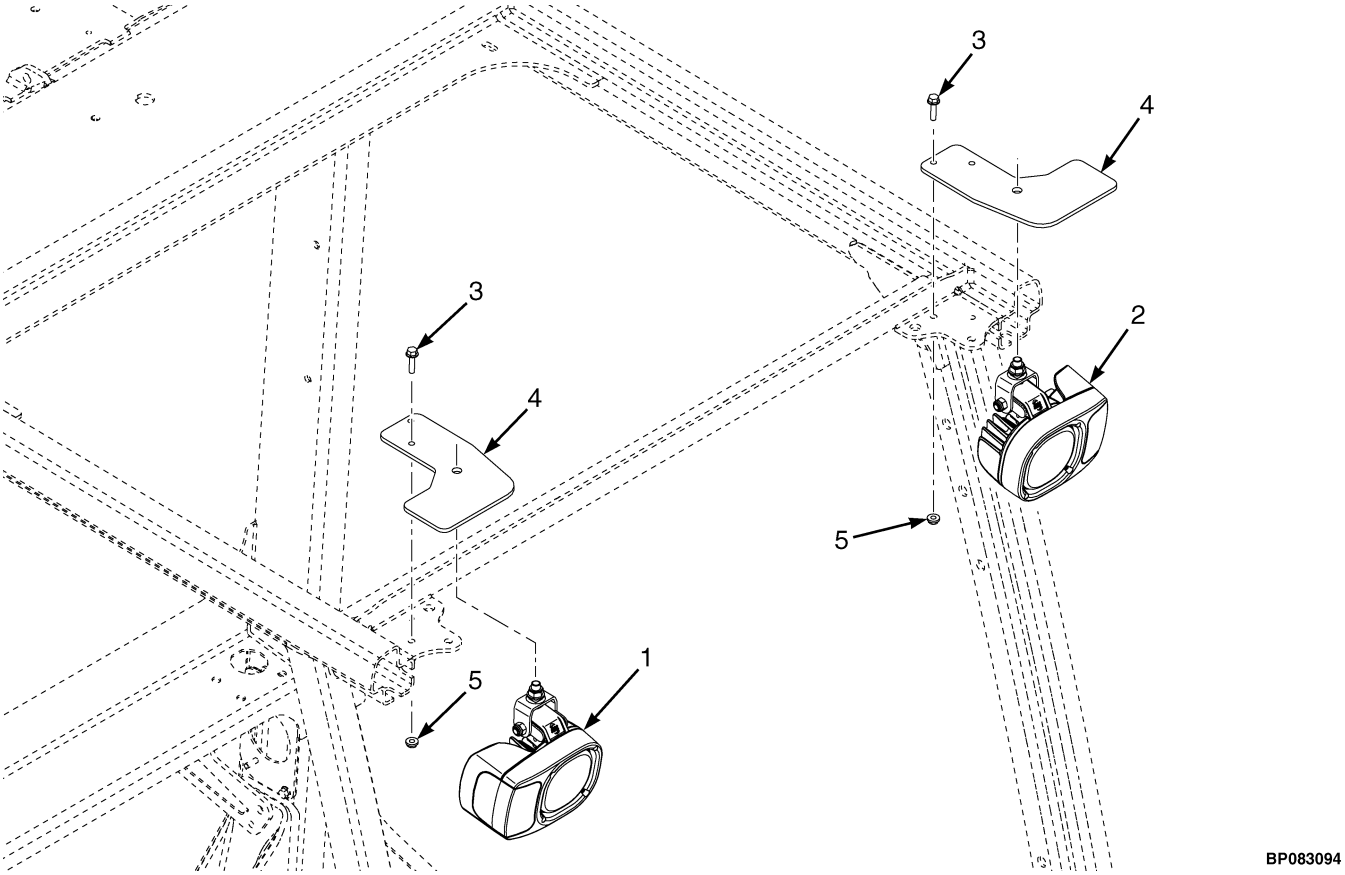

ITEM	PART NO.	DESCRIPTION	QTY
1	4703991	Head/Work Light - Front, RH, LED, Marker	1
1	4703993	Head/Work Light - Front, RH, LED, Marker, 1100 Lumens	1
2	4703990	Head/Work Light - Front, LH, LED, Marker	1
2	4703992	Head/Work Light - Front, LH, LED, Marker, 1100 Lumens	1
3	4309801	Screw	4
4	4295501	Bracket	2
4	4295499	Bracket	2
5	4309807	Nut	4

©2026 HYSTER COMPANY

LIGHTS (FIGURE 11-57)

TAIL LIGHTS AND REFLECTORS — WITH LIGHT COVER

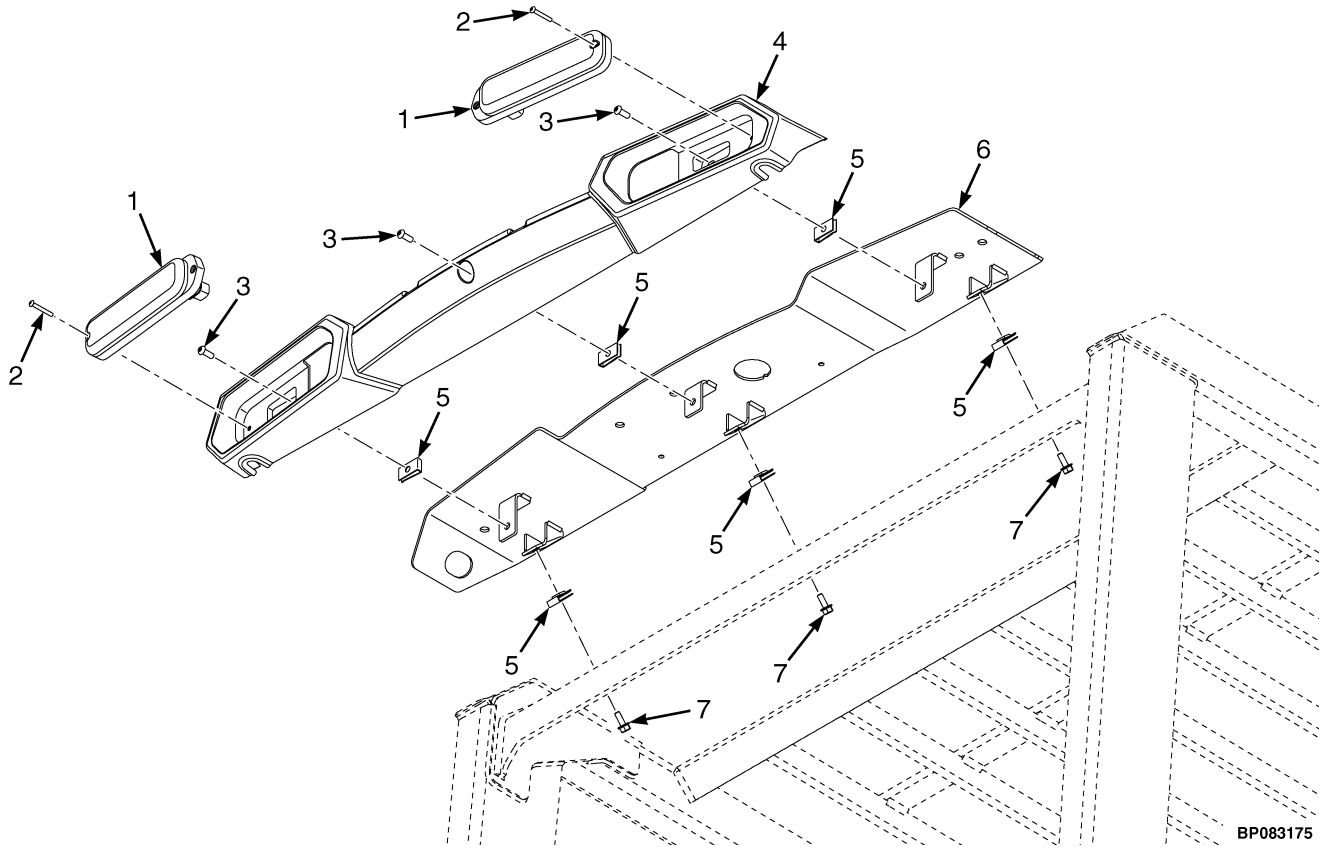

KEY:

A: Standard High, Low and Special Low Rectangle OHG.

B: Premium Rect and Fig8 OHG

ITEM	PART NO.	DESCRIPTION	QTY A	QTY B
1	4658710	Reflector	2	2
1	4602052	Light (Tail) (LED)	2	2
2	1672692	Screw	2	2
3	1510126	Screw (Button Head)	3	3
4	4679422	Cover - Tail Light (with cab)	1	1
4	. . . . .	Tail Light Cover (w/o cab)	1	1
5	325182	Nut , Foldover	6	3
6	4269041	Mounting Plate - Rear Light	1	..
6	**a** 4329904	Mounting Plate - Rear Light (Alternate Part)	1	..
7	4045424	Capscrew	3	..

FOOTNOTES:

a Premium Rectangle and Fig8 OHG come with rear mounting plate.

MINI-LEVER CONTROLS (FIGURE 11-58)

THREE FUNCTION — WITHOUT RTST

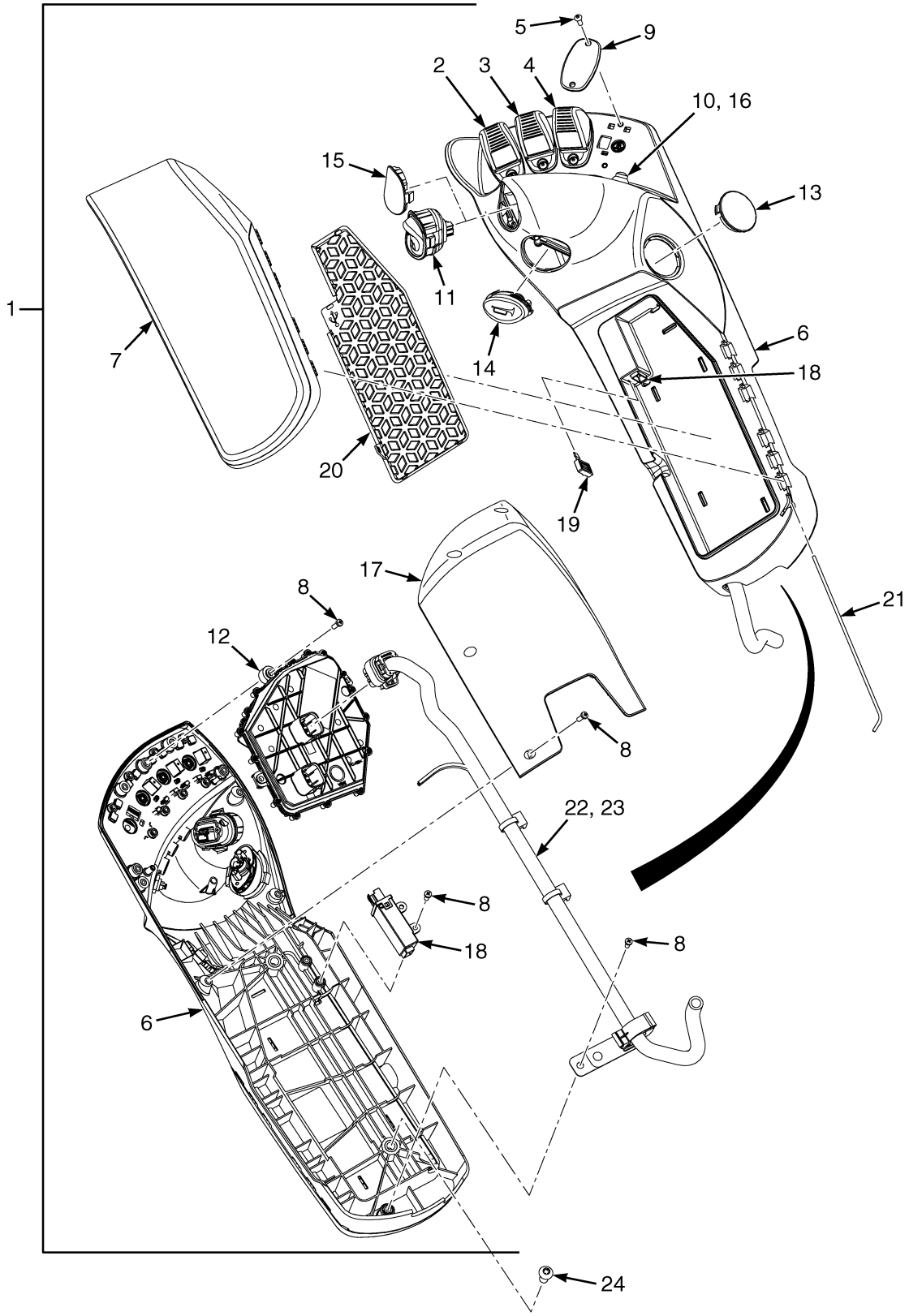

©2026 HYSTER COMPANY

MINI-LEVER CONTROLS
THREE FUNCTION – WITHOUT RTST

KEY:
A: Without Directional Control Switch
B: Without Directional Control Switch, With Clamp
C: With Directional Control Switch
D: With Directional Control Switch, With Clamp

ITEM	PART NO.	DESCRIPTION	QTY A	QTY B	QTY C	QTY D
1	4681837	Mini-Lever (Assembly)	1	..	..	..
1	4740519	Mini-Lever (Assembly) (Alternate Part)	1	..	..	..
1	4681839	Mini-Lever (Assembly)	..	1	..	..
1	4740521	Mini-Lever (Assembly) (Alternate Part)	..	1	..	..
1	4681845	Mini-Lever (Assembly)	..	..	1	..
1	4740527	Mini-Lever (Alternate Part)	..	..	1	..
1	4681847	Mini-Lever (Assembly)	..	..	..	1
1	4740529	Mini-Lever (Assembly) (Alternate Part)	..	..	..	1
2	. . . . .	Lever Position 1	1	1	1	1
2	4681888	Mini-Lever	1	1	1	1
3	. . . . .	Lever Position 2	1	1	1	1
3	4681888	Mini-Lever	1	1	1	1
4	. . . . .	Lever Position 3	1	1	1	1
4	4681888	Mini-Lever	1	1	1	1
5	. . . . .	Lever Position 4	1	1	1	1
5	1698449	Capscrew	8	8	8	8
6	4681889	Cover (Without Push Buttons Holes)	1	..	..	..
6	4681890	Cover (With Push Buttons Holes) (Shown)	..	1	1	1
7	4681885	Cushion (Armrest)	1	1	1	1
8	1703513	Screw	12	12	12	12
9	2108249	Plug	1	1	1	1
10	1704528	Push Button (Position 4)	..	1	..	1
11	~~2110943~~					
	4674013	Switch - Directional Control	..	..	1	1
12	4681886	Printed Circuit Board	1	1	1	1
12	4742853	Printed Circuit Board (Alternate Part)	1	1	1	1
13	4601120	Plug	1	1	1	1
14	2111770	Horn Button	1	1	1	1
15	2110942	Plug (Directional Control Switch)	1	1	..	..
16	4701721	Button - Momentary (Position 4)	..	1	..	1
17	4681887	Cover (Lower)	1	1	1	1
18	4695241	Module (USB)	1	1	1	1
19	4701729	Seal (USB)	1	1	1	1
20	4695242	Mat	1	1	1	1
21	4695243	Pin , Hinge	1	1	1	1
22	4701727	Wire Harness (Main MLM, ICE)	1	1	1	1
22	4742707	Wire Harness (Main MLM, ICE) (Alternate Part)	1	1	1	1
23	4701726	Wire Harness (w/ DCS w/ Pushbuttons)	..	1	1	1
23	4742706	Wire Harness (w/ DCS w/ Pushbuttons) (Alternate Part)	..	1	1	1
24	4120965	Screw	2	2	2	2

©2026 HYSTER COMPANY

MINI-LEVER CONTROLS (FIGURE 11-59)
FOUR FUNCTION — WITHOUT RTST

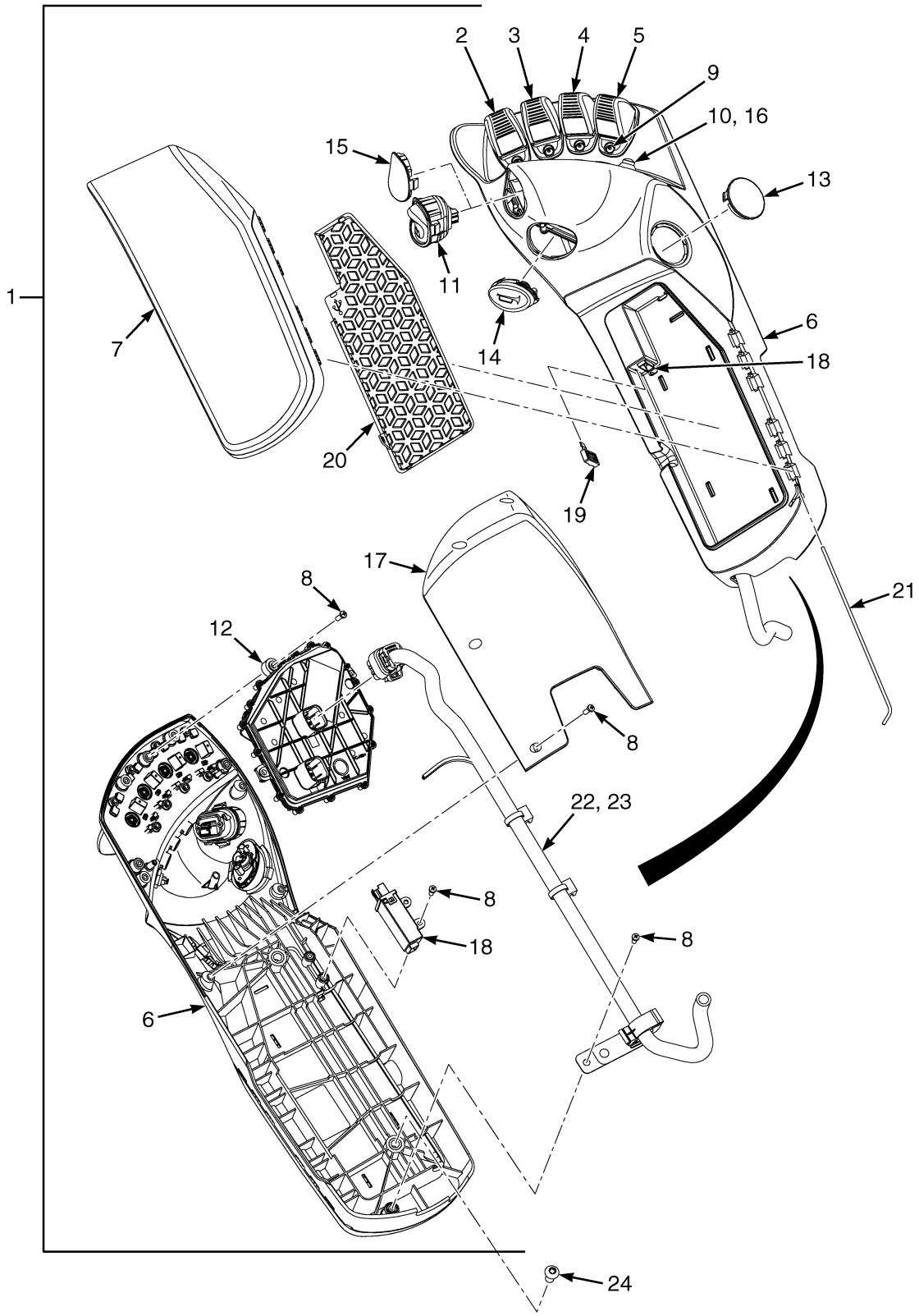

©2026 HYSTER COMPANY

MINI-LEVER CONTROLS
FOUR FUNCTION – WITHOUT RTST

KEY:
A: Without Directional Control Switch
B: Without Directional Control Switch, With Clamp
C: With Directional Control Switch
D: With Directional Control Switch, With Clamp

ITEM	PART NO.	DESCRIPTION	QTY A	QTY B	QTY C	QTY D
1	4681838	Mini-Lever (Assembly)	1	..	..	..
1	4740520	Mini-Lever (Assembly) (Alternate Part)	1	..	..	..
1	4681840	Mini-Lever (Assembly)	..	1	..	..
1	4740522	Mini-Lever (Assembly) (Alternate Part)	..	1	..	..
1	4681846	Mini-Lever (Assembly)	..	..	1	..
1	4740528	Mini-Lever (Assembly) (Alternate Part)	..	..	1	..
1	4681848	Mini-Lever (Assembly)	..	..	..	1
1	4740530	Mini-Lever (Assembly) (Alternate Part)	..	..	..	1
2	. . . . .	Lever Position 1	1	1	1	1
2	4681888	Mini-Lever	1	1	1	1
3	. . . . .	Lever Position 2	1	1	1	1
3	4681888	Mini-Lever	1	1	1	1
4	. . . . .	Lever Position 3	1	1	1	1
4	4681888	Mini-Lever	1	1	1	1
5	. . . . .	Lever Position 4	1	1	1	1
5	4681888	Mini-Lever	1	1	1	1
6	4681889	Cover (Without Push Buttons Holes)	1	..	..	..
6	4681890	Cover (With Push Buttons Holes) (Shown)	..	1	1	1
7	4681885	Cushion (Armrest)	1	1	1	1
8	1703513	Screw	12	12	12	12
9	1698449	Capscrew	8	8	8	8
10	1704528	Push Button (Position 4)	..	1	..	1
11	~~2110943~~					
	4674013	Switch - Directional Control	..	..	1	1
12	4681886	Printed Circuit Board	1	1	1	1
12	4742853	Printed Circuit Board (Alternate Part)	1	1	1	1
13	4601120	Plug	1	1	1	1
14	2111770	Horn Button	1	1	1	1
15	2110942	Plug (Directional Control Switch)	1	1	..	..
16	4701721	Button - Momentary (Position 4)	..	1	..	1
17	4681887	Cover (Lower)	1	1	1	1
18	4695241	Module (USB)	1	1	1	1
19	4701729	Seal (USB)	1	1	1	1
20	4695242	Mat	1	1	1	1
21	4695243	Pin , Hinge	1	1	1	1
22	4701727	Wire Harness (Main MLM, ICE)	1	1	1	1
22	4742707	Wire Harness (Main MLM, ICE) (Alternate Part)	1	1	1	1
23	4701726	Wire Harness (w/ DCS w/ Pushbuttons)	..	1	1	1
23	4742706	Wire Harness (w/ DCS w/ Pushbuttons) (Alternate Part)	..	1	1	1
24	4120965	Screw	2	2	2	2

©2026 HYSTER COMPANY

MINI-LEVER CONTROLS (FIGURE 11-60)
THREE FUNCTION — WITH RTST

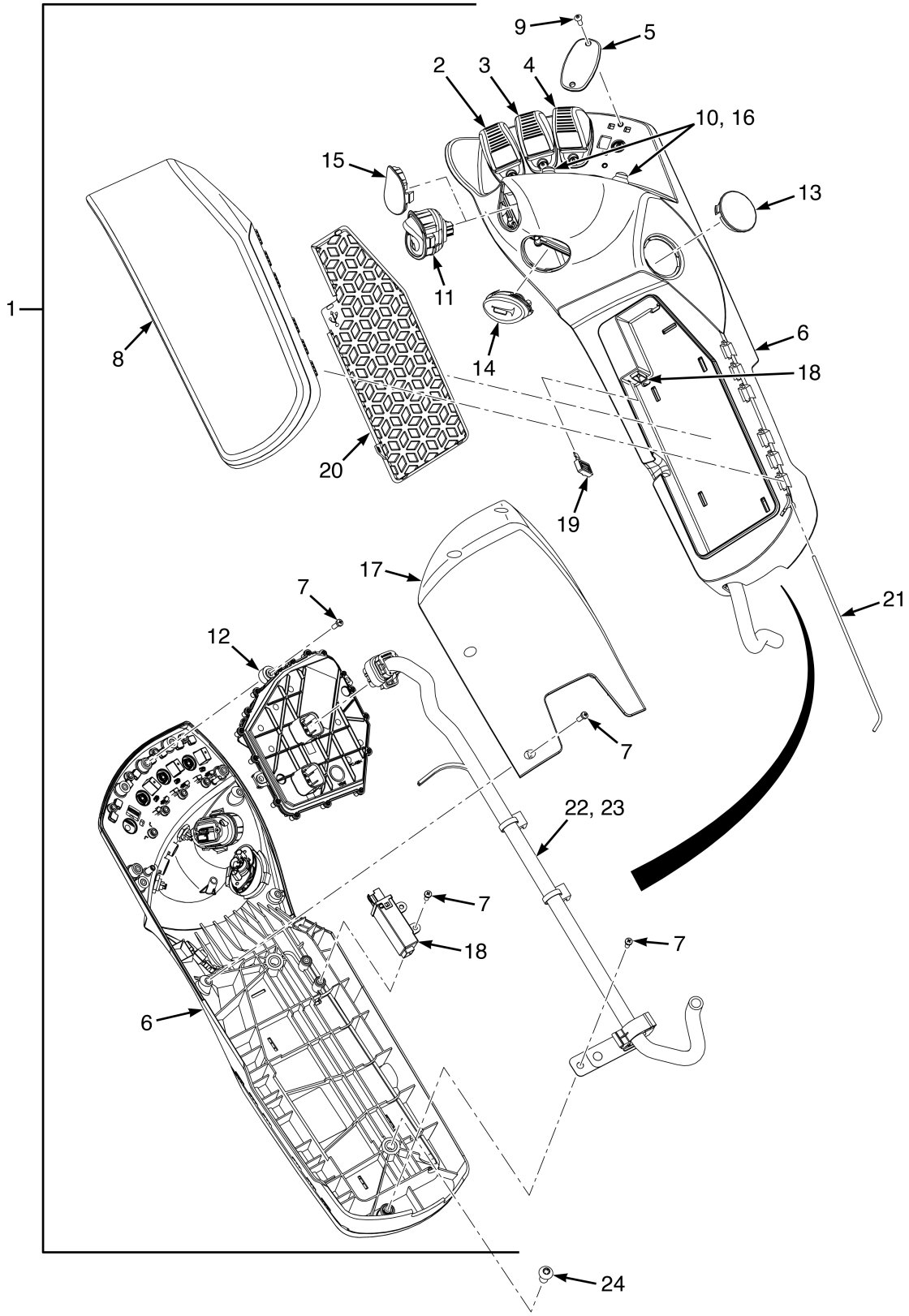

©2026 HYSTER COMPANY

MINI-LEVER CONTROLS
THREE FUNCTION – WITH RTST

KEY:
A: Without Directional Control Switch
B: Without Directional Control Switch, With Clamp
C: With Directional Control Switch
D: With Directional Control Switch, With Clamp

ITEM	PART NO.	DESCRIPTION	QTY A	QTY B	QTY C	QTY D
1	4681841	Mini-Lever (Assembly)	1	..	..	..
1	4740523	Mini-Lever (Assembly) (Alternate Part)	1	..	..	..
1	4681843	Mini-Lever (Assembly)	..	1	..	..
1	4740525	Mini-Lever (Assembly) (Alternate Part)	..	1	..	..
1	4681849	Mini-Lever (Assembly)	..	..	1	..
1	4740531	Mini-Lever (Assembly) (Alternate Part)	..	..	1	..
1	4681851	Mini-Lever (Assembly)	..	..	..	1
1	4740533	Mini-Lever (Assembly) (Alternate Part)	..	..	..	1
2	. . . . .	Lever Position 1	1	1	1	1
2	4681888	Mini-Lever	1	1	1	1
3	. . . . .	Lever Position 2	1	1	1	1
3	4681888	Mini-Lever	1	1	1	1
4	. . . . .	Lever Position 3	1	1	1	1
4	4681888	Mini-Lever	1	1	1	1
5	. . . . .	Lever Position 4	1	1	1	1
5	2108249	Plug	1	1	1	1
6	4681890	Cover (With Push Buttons Holes)	1	1	1	1
7	1703513	Screw	12	12	12	12
8	4681885	Cushion (Armrest)	1	1	1	1
9	1698449	Capscrew	8	8	8	8
10	1704528	Push Button (Position 1)	1	1	1	1
10	1704528	Push Button (Position 4)	..	1	..	1
11	~~2110943~~					
	4674013	Switch - Directional Control	..	..	1	1
12	4681886	Printed Circuit Board	1	1	1	1
12	4742853	Printed Circuit Board (Alternate Part)	1	1	1	1
13	4601120	Plug	1	1	1	1
14	2111770	Horn Button	1	1	1	1
15	2110942	Plug (Directional Control Switch)	1	1	..	..
16	4701721	Button - Momentary	1	1	1	1
17	4681887	Cover (Lower)	1	1	1	1
18	4695241	Module (USB)	1	1	1	1
19	4701729	Seal (USB)	1	1	1	1
20	4695242	Mat	1	1	1	1
21	4695243	Pin , Hinge	1	1	1	1
22	4701727	Wire Harness (Main MLM, ICE)	1	1	1	1
22	4742707	Wire Harness (Main MLM, ICE) (Alternate Part)	1	1	1	1
23	4701726	Wire Harness (w/ DCS w/ Pushbuttons)	1	1	1	1
23	4742706	Wire Harness (w/ DCS w/ Pushbuttons) (Alternate Part)	..	1	1	1
24	4120965	Screw	2	2	2	2

©2026 HYSTER COMPANY

MINI-LEVER CONTROLS (FIGURE 11-61)
FOUR FUNCTION — WITH RTST

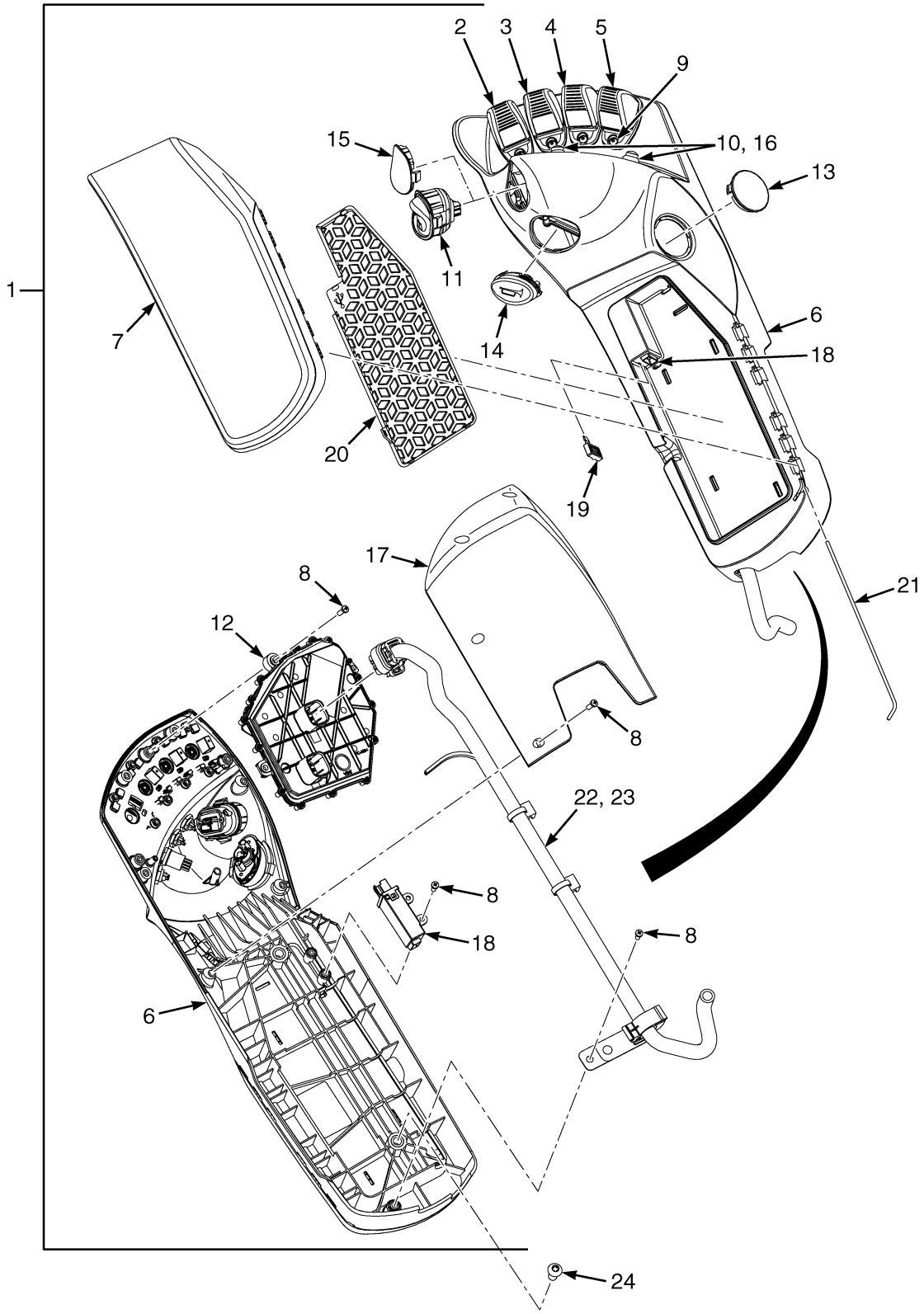

©2026 HYSTER COMPANY

MINI-LEVER CONTROLS
FOUR FUNCTION – WITH RTST

KEY:
A: Without Directional Control Switch
B: Without Directional Control Switch, With Clamp
C: With Directional Control Switch
D: With Directional Control Switch, With Clamp

ITEM	PART NO.	DESCRIPTION	QTY A	QTY B	QTY C	QTY D
1	4681842	Mini-Lever (Assembly)	1	..	..	..
1	4740524	Mini-Lever (Assembly) (Alternate Part)	1	..	..	..
1	4681844	Mini-Lever (Assembly)	..	1	..	..
1	4740526	Mini-Lever (Assembly) (Alternate Part)	..	1	..	..
1	4681850	Mini-Lever (Assembly)	..	..	1	..
1	4740532	Mini-Lever (Assembly) (Alternate Part)	..	..	1	..
1	4681852	Mini-Lever (Assembly)	..	..	..	1
1	4740534	Mini-Lever (Assembly) (Alternate Part)	..	..	..	1
2	. . . . .	Lever Position 1	1	1	1	1
2	4681888	Mini-Lever	1	1	1	1
3	. . . . .	Lever Position 2	1	1	1	1
3	4681888	Mini-Lever	1	1	1	1
4	. . . . .	Lever Position 3	1	1	1	1
4	4681888	Mini-Lever	1	1	1	1
5	. . . . .	Lever Position 4	1	1	1	1
5	4681888	Mini-Lever	1	1	1	1
6	4681890	Cover (With Push Buttons Holes)	1	1	1	1
7	4681885	Cushion (Armrest)	1	1	1	1
8	1703513	Screw	12	12	12	12
9	1698449	Capscrew	8	8	8	8
10	1704528	Push Button (Position 1)	1	1	1	1
10	1704528	Push Button (Position 4)	..	1	..	1
11	~~2110943~~					
	4674013	Switch - Directional Control	..	..	1	1
12	4681886	Printed Circuit Board	1	1	1	1
12	4742853	Printed Circuit Board (Alternate Part)	1	1	1	1
13	4601120	Plug	1	1	1	1
14	2111770	Horn Button	1	1	1	1
15	2110942	Plug (Directional Control Switch)	1	1	..	..
16	4701721	Button - Momentary	1	1	1	1
17	4681887	Cover (Lower)	1	1	1	1
18	4695241	Module (USB)	1	1	1	1
19	4701729	Seal (USB)	1	1	1	1
20	4695242	Mat	1	1	1	1
21	4695243	Pin , Hinge	1	1	1	1
22	4701727	Wire Harness (Main MLM, ICE)	1	1	1	1
22	4742707	Wire Harness (Main MLM, ICE) (Alternate Part)	1	1	1	1
23	4701726	Wire Harness (w/ DCS w/ Pushbuttons)	1	1	1	1
23	4742706	Wire Harness (w/ DCS w/ Pushbuttons) (Alternate Part)	..	1	1	1
24	4120965	Screw	2	2	2	2

©2026 HYSTER COMPANY

MINI-LEVER CONTROLS (FIGURE 11-62)

THREE FUNCTION WITH SHELF HEIGHT SELECTOR — WITHOUT RTST

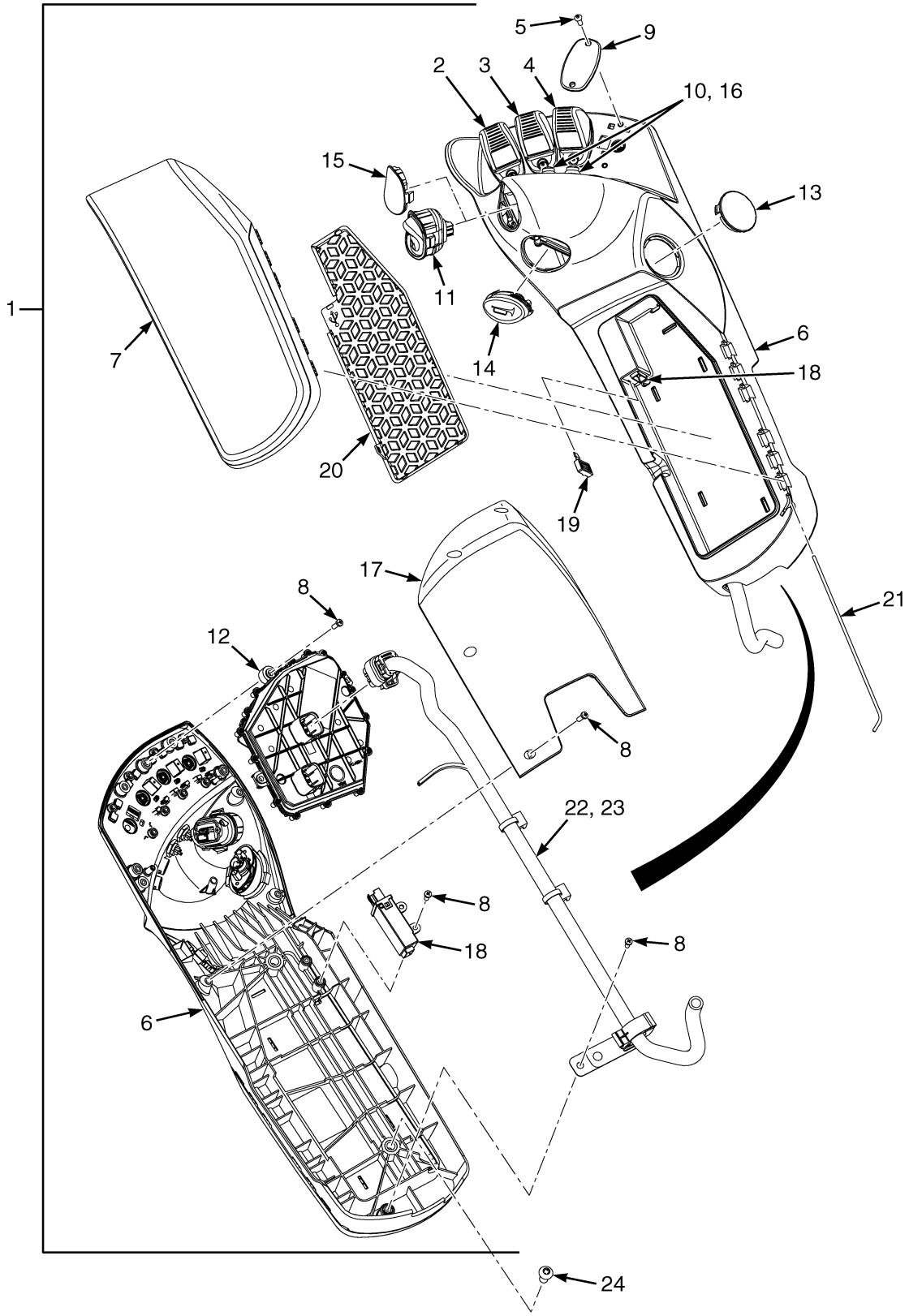

©2026 HYSTER COMPANY

MINI-LEVER CONTROLS

THREE FUNCTION WITH SHELF HEIGHT SELECTOR – WITHOUT RTST

KEY:
A: Without Directional Control Switch
B: With Directional Control Switch
C: Without Directional Control Switch, With Clamp
D: With Directional Control Switch, With Clamp

ITEM	PART NO.	DESCRIPTION	QTY A	QTY B	QTY C	QTY D
1	4681861	Mini-Lever (Assembly)	1	..	..	..
1	4740543	Mini-Lever (Assembly) (Alternate Part)	1	..	..	..
1	4681862	Mini-Lever (Assembly)	..	1	..	..
1	4740544	Mini-Lever (Assembly) (Alternate Part)	..	1	..	..
1	4681873	Mini-Lever (Assembly)	..	..	1	..
1	4740555	Mini-Lever (Assembly) (Alternate Part)	..	..	1	..
1	4681874	Mini-Lever (Assembly)	..	..	..	1
1	4740556	Mini-Lever (Assembly) (Alternate Part)	..	..	..	1
2	. . . . .	Lever Position 1	1	1	1	1
2	4681888	Mini-Lever	1	1	1	1
3	. . . . .	Lever Position 2	1	1	1	1
3	4681888	Mini-Lever	1	1	1	1
4	. . . . .	Lever Position 3	1	1	1	1
4	4681888	Mini-Lever	1	1	1	1
5	. . . . .	Lever Position 4	1	1	1	1
5	2108249	Plug	1	1	1	1
6	4681890	Cover (With Push Buttons Holes)	1	1	1	1
7	4681885	Cushion (Armrest)	1	1	1	1
8	1703513	Screw	12	12	12	12
9	1698449	Capscrew	8	8	8	8
10	1704528	Push Button (Position 1)	..	..	1	1
10	1704528	Push Button (Position 2)	1	1	1	1
11	~~2110943~~					
	4674013	Switch - Directional Control	..	1	..	1
12	4681886	Printed Circuit Board	1	1	1	1
12	4742853	Printed Circuit Board (Alternate Part)	1	1	1	1
13	4601120	Plug	1	1	1	1
14	2111770	Horn Button	1	1	1	1
15	2110942	Plug (Directional Control Switch)	1	..	1	..
16	4701721	Button - Momentary	1	1	1	1
17	4681887	Cover (Lower)	1	1	1	1
18	4695241	Module (USB)	1	1	1	1
19	4701729	Seal (USB)	1	1	1	1
20	4695242	Mat	1	1	1	1
21	4695243	Pin , Hinge	1	1	1	1
22	4701727	Wire Harness (Main MLM, ICE)	1	1	1	1
22	4742707	Wire Harness (Main MLM, ICE) (Alternate Part)	1	1	1	1
23	4701726	Wire Harness (w/ DCS w/ Pushbuttons)	1	1	1	1
23	4742706	Wire Harness (w/ DCS w/ Pushbuttons) (Alternate Part)	1	1	1	1
24	4120965	Screw	2	2	2	2

©2026 HYSTER COMPANY

MINI-LEVER CONTROLS (FIGURE 11-63)

THREE FUNCTION WITH SHELF HEIGHT SELECTOR — WITH RTST

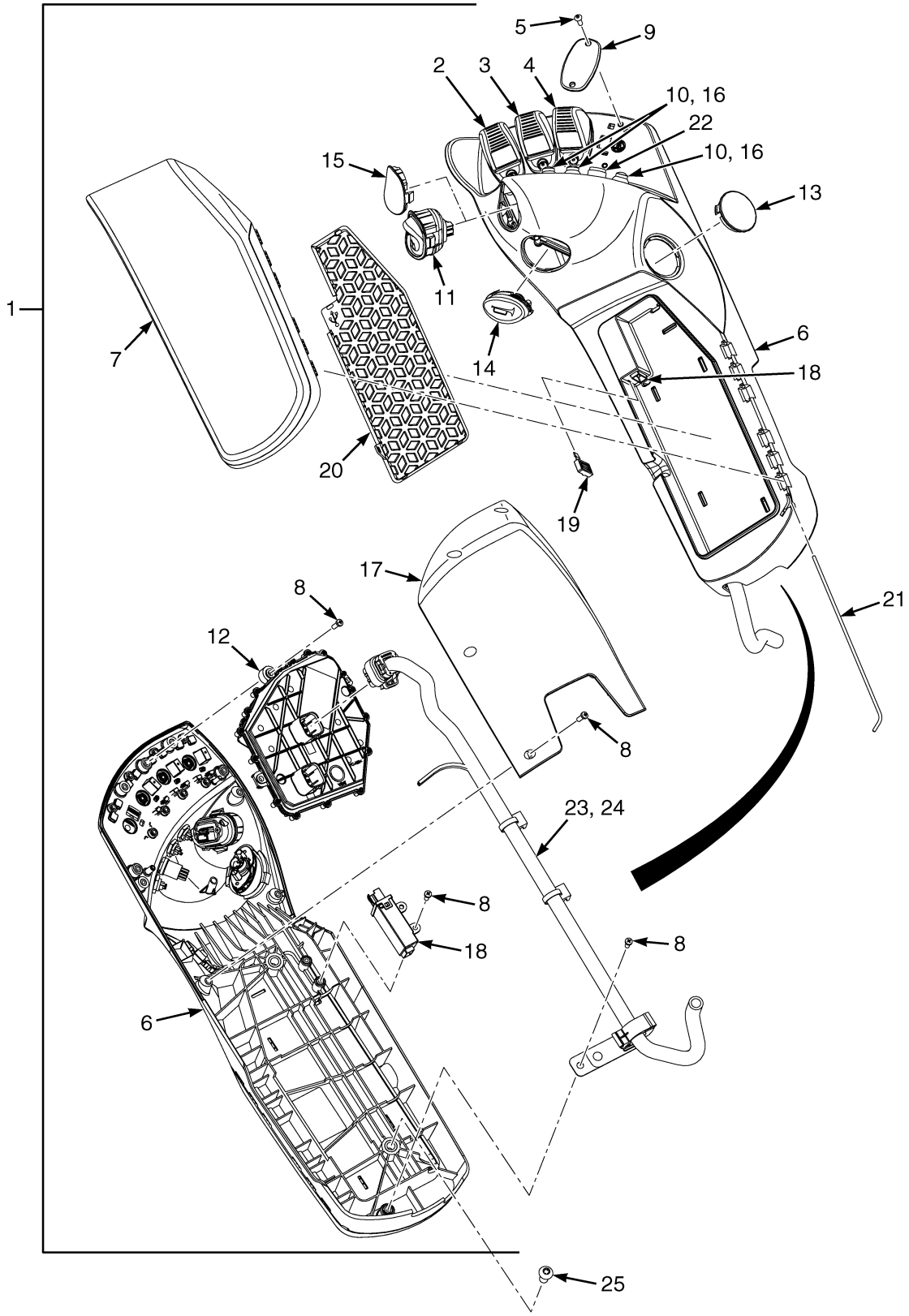

©2026 HYSTER COMPANY

MINI-LEVER CONTROLS

THREE FUNCTION WITH SHELF HEIGHT SELECTOR – WITH RTST

KEY:
A: Without Directional Control Switch
B: With Directional Control Switch
C: Without Directional Control Switch, With Clamp
D: With Directional Control Switch, With Clamp

ITEM	PART NO.	DESCRIPTION	QTY A	QTY B	QTY C	QTY D
1	4681867	Mini-Lever (Assembly)	1	..	..	..
1	4740549	Mini-Lever (Assembly) (Alternate Part)	1	..	..	..
1	4681868	Mini-Lever (Assembly)	..	1	..	..
1	4740550	Mini-Lever (Assembly) (Alternate Part)	..	1	..	..
1	4681879	Mini-Lever (Assembly)	..	..	1	..
1	4740561	Mini-Lever (Assembly) (Alternate Part)	..	..	1	..
1	4681880	Mini-Lever (Assembly)	..	..	..	1
1	4740562	Mini-Lever (Assembly) (Alternate Part)	..	..	..	1
2	. . . . .	Lever Position 1	1	1	1	1
2	4681888	Mini-Lever	1	1	1	1
3	. . . . .	Lever Position 2	1	1	1	1
3	4681888	Mini-Lever	1	1	1	1
4	. . . . .	Lever Position 3	1	1	1	1
4	4681888	Mini-Lever	1	1	1	1
5	. . . . .	Lever Position 4	1	1	1	1
5	2108249	Plug	1	1	1	1
6	4681890	Cover (With Push Buttons Holes)	1	1	1	1
7	4681885	Cushion (Armrest)	1	1	1	1
8	1703513	Screw	12	12	12	12
9	1698449	Capscrew	8	8	8	8
10	1704528	Push Button (Position 1)	1	1	1	1
10	1704528	Push Button (Position 2)	1	1	1	1
10	1704528	Push Button (Position 4)	1	1	..	1
11	~~2110943~~					
	4674013	Switch - Directional Control	..	1	..	1
12	4681886	Printed Circuit Board	1	1	1	1
12	4742853	Printed Circuit Board (Alternate Part)	1	1	1	1
13	4601120	Plug	1	1	1	1
14	2111770	Horn Button	1	1	1	1
15	2110942	Plug (Directional Control Switch)	1	..	1	..
16	4701721	Button - Momentary	1	1	1	1
17	4681887	Cover (Lower)	1	1	1	1
18	4695241	Module (USB)	1	1	1	1
19	4701729	Seal (USB)	1	1	1	1
20	4695242	Mat	1	1	1	1
21	4695243	Pin , Hinge	1	1	1	1
22	1703775	Switch (Dual Function) (Position 3)	..	..	1	1
22	4742707	Wire Harness (Main MLM, ICE) (Alternate Part)	1	1	1	1
23	4701727	Wire Harness (Main MLM, ICE)	1	1	1	1
23	4742706	Wire Harness (w/ DCS w/ Pushbuttons) (Alternate Part)	1	1	1	1
24	4701726	Wire Harness (w/ DCS w/ Pushbuttons)	1	1	1	1
25	4120965	Screw	2	2	2	2

MINI-LEVER CONTROLS (FIGURE 11-64)

FOUR FUNCTION WITH SHELF HEIGHT SELECTOR — WITHOUT RTST

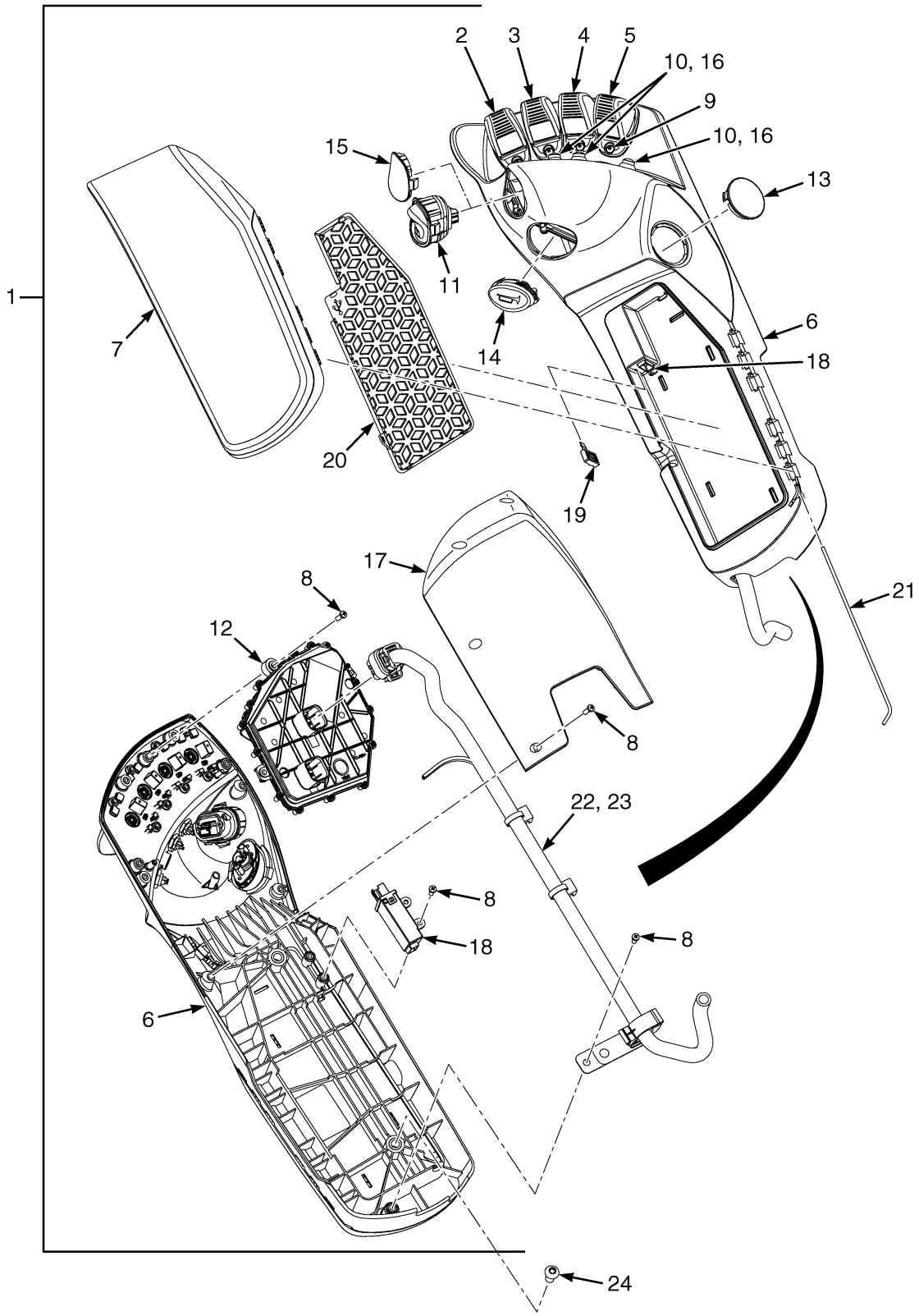

©2026 HYSTER COMPANY

MINI-LEVER CONTROLS

FOUR FUNCTION WITH SHELF HEIGHT SELECTOR – WITHOUT RTST

KEY:
A: Without Directional Control Switch
B: With Directional Control Switch
C: Without Directional Control Switch, With Clamp
D: With Directional Control Switch, With Clamp

ITEM	PART NO.	DESCRIPTION	QTY A	QTY B	QTY C	QTY D
1	4681863	Mini-Lever (Assembly)	1	..	..	..
1	4740545	Mini-Lever (Assembly) (Alternate Part)	1	..	..	..
1	4681864	Mini-Lever (Assembly)	..	1	..	..
1	4740546	Mini-Lever (Assembly) (Alternate Part)	..	1	..	..
1	4681875	Mini-Lever (Assembly)	..	..	1	..
1	4740557	Mini-Lever (Assembly) (Alternate Part)	..	..	1	..
1	4681876	Mini-Lever (Assembly)	..	..	..	1
1	4740558	Mini-Lever (Assembly) (Alternate Part)	..	..	..	1
2	. . . . .	Lever Position 1	1	1	1	1
2	4681888	Mini-Lever	1	1	1	1
3	. . . . .	Lever Position 2	1	1	1	1
3	4681888	Mini-Lever	1	1	1	1
4	. . . . .	Lever Position 3	1	1	1	1
4	4681888	Mini-Lever	1	1	1	1
5	. . . . .	Lever Position 4	1	1	1	1
5	4681888	Mini-Lever	1	1	1	1
6	4681890	Cover (With Push Buttons Holes)	1	1	1	1
7	4681885	Cushion (Armrest)	1	1	1	1
8	1703513	Screw	12	12	12	12
9	1698449	Capscrew	8	8	8	8
10	1704528	Push Button (Position 1)	..	..	1	1
10	1704528	Push Button (Position 2)	1	1	1	1
10	1704528	Push Button (Position 4)	1	1	1	1
11	~~2110943~~					
	4674013	Switch - Directional Control	..	1	..	1
12	4681886	Printed Circuit Board	1	1	1	1
12	4742853	Printed Circuit Board (Alternate Part)	1	1	1	1
13	4601120	Plug	1	1	1	1
14	2111770	Horn Button	1	1	1	1
15	2110942	Plug (Directional Control Switch)	1	..	1	..
16	4701721	Button - Momentary	1	1	1	1
17	4681887	Cover (Lower)	1	1	1	1
18	4695241	Module (USB)	1	1	1	1
19	4701729	Seal (USB)	1	1	1	1
20	4695242	Mat	1	1	1	1
21	4695243	Pin , Hinge	1	1	1	1
22	4701727	Wire Harness (Main MLM, ICE)	1	1	1	1
22	4742707	Wire Harness (Main MLM, ICE) (Alternate Part)	1	1	1	1
23	4701726	Wire Harness (w/ DCS w/ Pushbuttons)	1	1	1	1
23	4742706	Wire Harness (w/ DCS w/ Pushbuttons) (Alternate Part)	1	1	1	1
24	4120965	Screw	2	2	2	2

©2026 HYSTER COMPANY

MINI-LEVER CONTROLS (FIGURE 11-65)

FOUR FUNCTION WITH SHELF HEIGHT SELECTOR — WITH RTST

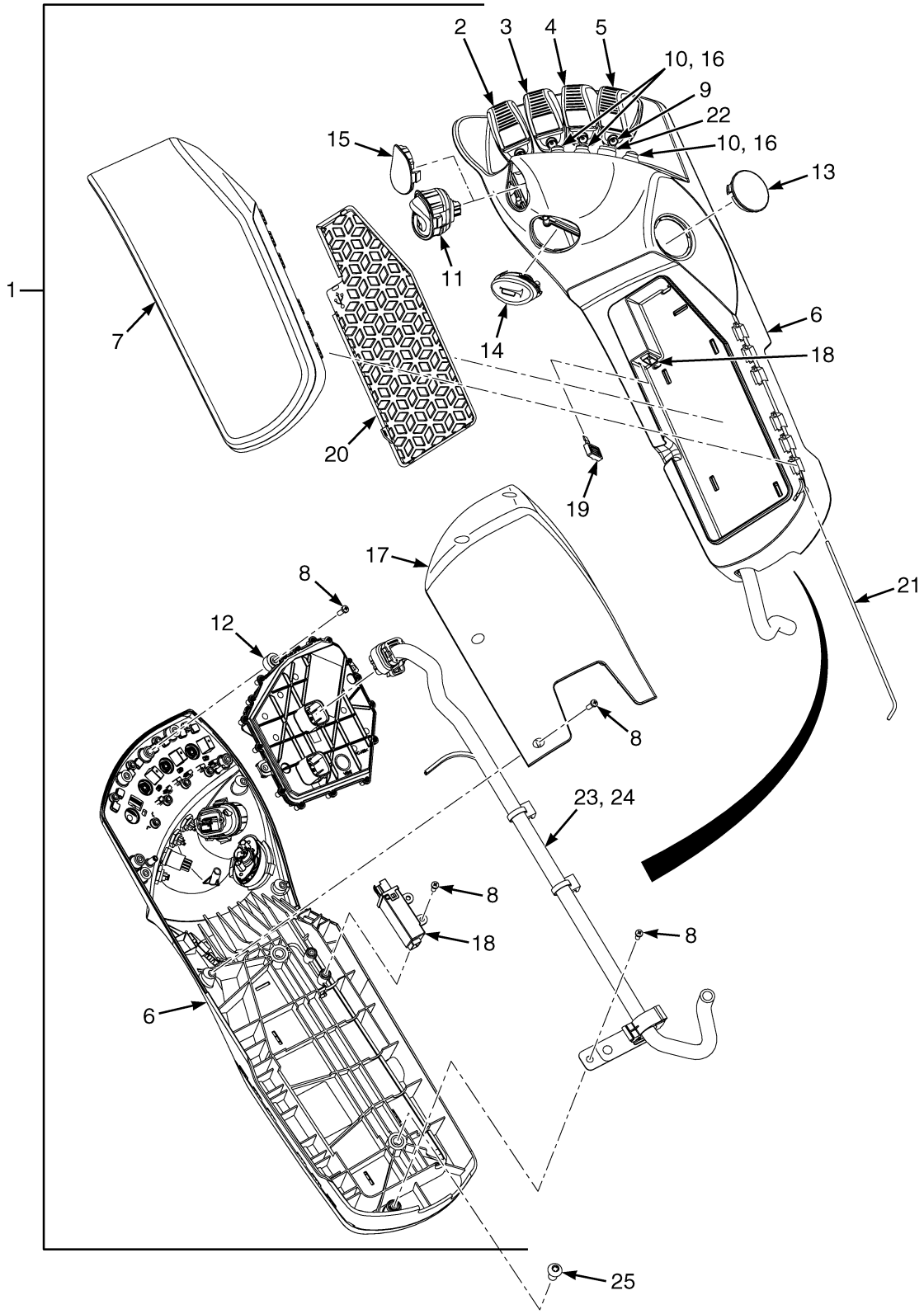

©2026 HYSTER COMPANY

MINI-LEVER CONTROLS

FOUR FUNCTION WITH SHELF HEIGHT SELECTOR – WITH RTST

KEY:
A: Without Directional Control Switch
B: With Directional Control Switch
C: Without Directional Control Switch, With Clamp
D: With Directional Control Switch, With Clamp

ITEM	PART NO.	DESCRIPTION	QTY A	QTY B	QTY C	QTY D
1	4681869	Mini-Lever (Assembly)	1	..	..	..
1	4740551	Mini-Lever (Assembly) (Alternate Part)	1	..	..	..
1	4681870	Mini-Lever (Assembly)	..	1	..	..
1	4740552	Mini-Lever (Assembly) (Alternate Part)	..	1	..	..
1	4681881	Mini-Lever (Assembly)	..	..	1	..
1	4740563	Mini-Lever (Assembly) (Alternate Part)	..	..	1	..
1	4681882	Mini-Lever (Assembly)	..	..	..	1
1	4740564	Mini-Lever (Assembly) (Alternate Part)	..	..	..	1
2	. . . . .	Lever Position 1	1	1	1	1
2	4681888	Mini-Lever	1	1	1	1
3	. . . . .	Lever Position 2	1	1	1	1
3	4681888	Mini-Lever	1	1	1	1
4	. . . . .	Lever Position 3	1	1	1	1
4	4681888	Mini-Lever	1	1	1	1
5	. . . . .	Lever Position 4	1	1	1	1
5	4681888	Mini-Lever	1	1	1	1
6	4681890	Cover (With Push Buttons Holes)	1	1	1	1
7	4681885	Cushion (Armrest)	1	1	1	1
8	1703513	Screw	12	12	12	12
9	1698449	Capscrew	8	8	8	8
10	1704528	Push Button (Position 2)	1	1	1	1
10	1704528	Push Button (Position 4)	..	..	..	1
11	~~2110943~~					
	4674013	Switch - Directional Control	..	1	..	1
12	4681886	Printed Circuit Board	1	1	1	1
12	4742853	Printed Circuit Board (Alternate Part)	1	1	1	1
13	4601120	Plug	1	1	1	1
14	2111770	Horn Button	1	1	1	1
15	2110942	Plug (Directional Control Switch)	1	..	1	..
16	4701721	Button - Momentary	1	1	1	1
17	4681887	Cover (Lower)	1	1	1	1
18	4695241	Module (USB)	1	1	1	1
19	4701729	Seal (USB)	1	1	1	1
20	4695242	Mat	1	1	1	1
21	4695243	Pin , Hinge	1	1	1	1
22	1703775	Switch (Dual Function) (Position 3)	..	..	1	1
22	4742707	Wire Harness (Main MLM, ICE) (Alternate Part)	1	1	1	1
23	4701727	Wire Harness (Main MLM, ICE)	1	1	1	1
23	4742706	Wire Harness (w/ DCS w/ Pushbuttons) (Alternate Part)	1	1	1	1
24	4701726	Wire Harness (w/ DCS w/ Pushbuttons)	1	1	1	1
25	4120965	Screw	2	2	2	2

OHG WITHOUT REAR LIGHT (FIGURE 11-66)

RESISTOR AND ATTACHING PARTS

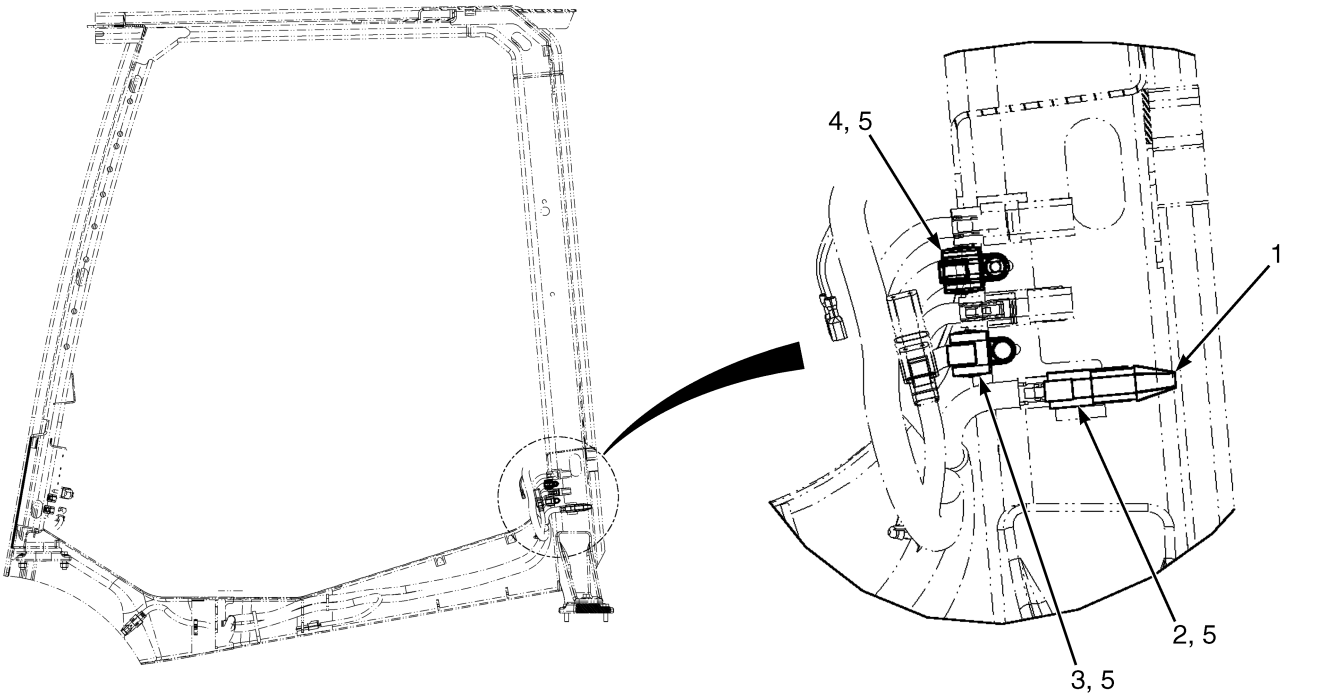

BP083423

ITEM	PART NO.	DESCRIPTION	QTY
1	4288899	Resistor (Connector Assembly)	1
1	1530960	Connector (6-Pin)	1
1	1530961	Connector (Secondary Lock)	1
1	2062874	Resistor (1/2 Watt)	1
1	1463138	Terminal (Pin)	2
1	1484377	Plug	4
2	1500912	Clip	1
3	4036523	Cap	1
4	4036873	Cap (6 Way)	1
5	1582464	Fastener	3

©2026 HYSTER COMPANY

POWER TO MAST (FIGURE 11-67)

HARNESS AND ANCILLARY PARTS (→ 8/2025)

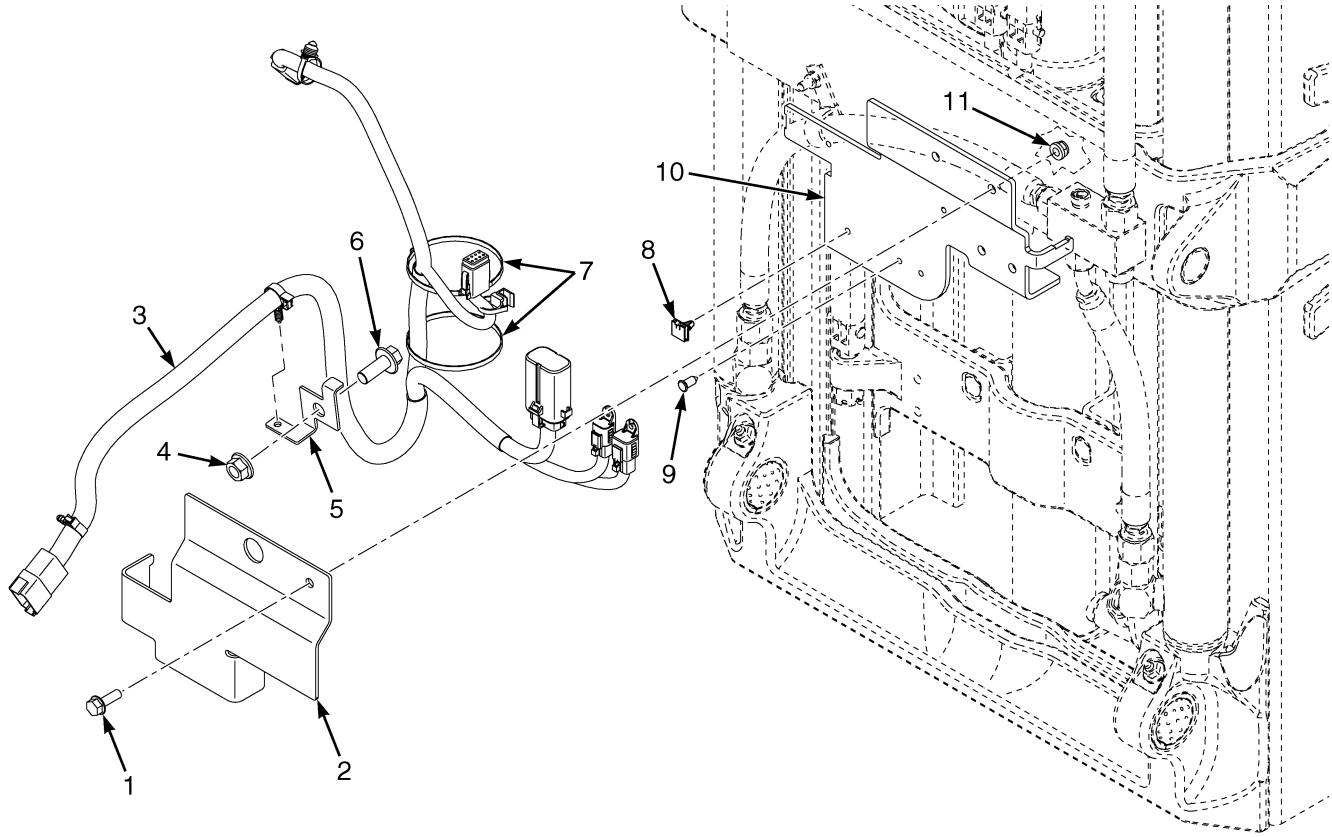

BP083155

ITEM	PART NO.	DESCRIPTION	QTY
1	4185429	Capscrew	2
2	4276773	Plate	1
3	4710912	Wire Harness - Power to Mast, Disc Hgt w/o Tilt (☞Figure 11-126)	1
3	4710913	Wire Harness - Power to Mast, Disc/Cont Hgt w/o Tilt (☞Figure 11-126)	1
3	4710914	Wire Harness - Power to Mast, Disc Hgt w/ RTST (☞Figure 11-126)	1
3	4710915	Wire Harness - Power to Mast, Disc/Cont Hgt w/ RTST (☞Figure 11-126)	1
4	~~1370949~~		
	1528888	Nut (Shoulder)	1
5	4318030	Bracket	1
5	4343081	Bracket (Alternate Part)	1
6	1528889	Capscrew	1
7	2004005	Strap Clamp	2
8	4274656	Connector	1
9	1582464	Fastener	2
10	4277215	Plate	1
11	4187690	Locknut	2

POWER TO MAST (FIGURE 11-68)

HARNESS AND ANCILLARY PARTS (8/2025 →)

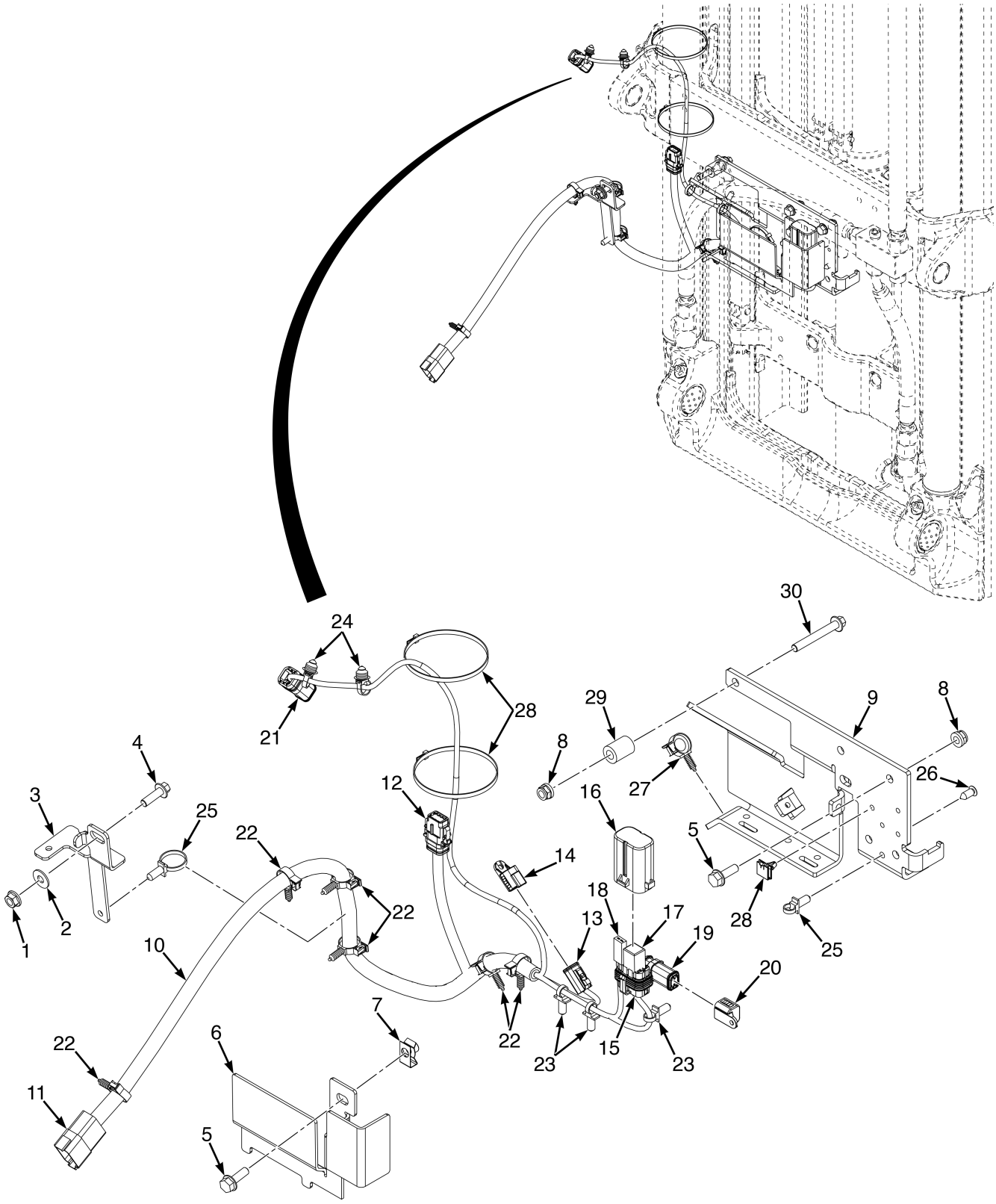

©2026 HYSTER COMPANY

POWER TO MAST

HARNESS AND ANCILLARY PARTS (8/2025 →)

KEY:
A: w/o RTST
B: w/ RTST

ITEM	PART NO.	DESCRIPTION	QTY A	QTY B
1	~~1382472~~			
	1502543	Nut	1	1
2	320158	Washer	1	1
3	4396770	Bracket (Cowl Mounting)	1	1
4	1510113	Capscrew	1	1
5	4185429	Capscrew	3	3
6	4396769	Bracket (Rear Mounting)	1	1
7	1398062	Nut (Fold Over)	1	1
8	4187690	Locknut	3	3
9	4396768	Bracket (Front Mounting)	1	1
10	4744936	Wire Harness - Power to Mast, Disc Hgt w/o RTST	1	1
10	4744934	Wire Harness - Power to Mast, Disc Hgt w/ RTST	..	1
11	. . . . .	Connector Assembly (CRP530) To Chassis	1	1
11	1500925	Connector (DT REC 12-Pin)	1	1
11	1352603	Secondary Lock	1	1
11	1330437	Terminal (Pin)	6	6
11	1484377	Plug	6	6
12	. . . . .	Connector Assembly (CPS567) Power To Carriage	1	1
12	4397207	Connector	1	1
12	1541992	Connector (Secondary Lock)	1	1
12	1463141	Terminal (Socket)	2	2
12	1484377	Plug	6	6
13	. . . . .	Connector Assembly (CPS545) To Mast Light Jumper	1	1
13	1490242	Connector (2 Way)	1	1
13	1490243	Connector (Secondary Lock)	1	1
13	1330438	Terminal (Socket)	2	2
14	4035905	Cap (DT 2-Way)	1	1
15	. . . . .	Connector Assembly (CPS591) Relay Holder	1	1
15	1521183	Connector	1	1
15	1521188	Lock	1	1
15	1330281	Terminal	2	2
15	1327164	Terminator	2	2
16	4045422	Cover	1	1
17	1528315	Relay (20 Amp)	1	1
18	4276153	Resistor	1	1
19	. . . . .	Connector Assembly (CPS586) To Fork Height Jumper	1	1
19	4010797	Connector (DT PLU 4-Socket)	1	1
19	4397455	Connector Lock	1	1
19	1597773	Terminal	3	3
19	1484377	Plug	1	1
20	4036523	Cap	1	1
21	. . . . .	Connector Assembly (CPS514) Mast Tilt Sensor	..	1
21	4215535	Connector	..	1
21	1529052	Connector (Secondary Lock)	..	1
21	1330439	Plug Seal	..	2

POWER TO MAST

HARNESS AND ANCILLARY PARTS (8/2025 →)

KEY:
A: w/o RTST
B: w/ RTST

ITEM	PART NO.	DESCRIPTION	QTY A	QTY B
21	. . . . .	Terminal	..	4
22	1509890	Clip	6	6
23	4140361	Cable Clip	4	4
24	4697921	Cable (Clip)	..	2
25	4140361	Cable Clip	6	6
26	1582464	Fastener	2	2
27	1509890	Clip	2	2
28	4274656	Connector	1	1
28	2004005	Strap Clamp	..	2
29	**a** 81040598	Spacer	..	1
30	**a** 1510116	Capscrew	..	1

FOOTNOTES:

a Manufacturing Option

©2026 HYSTER COMPANY

NOTES

TELEMETRY OPTIONS (FIGURE 11-69)

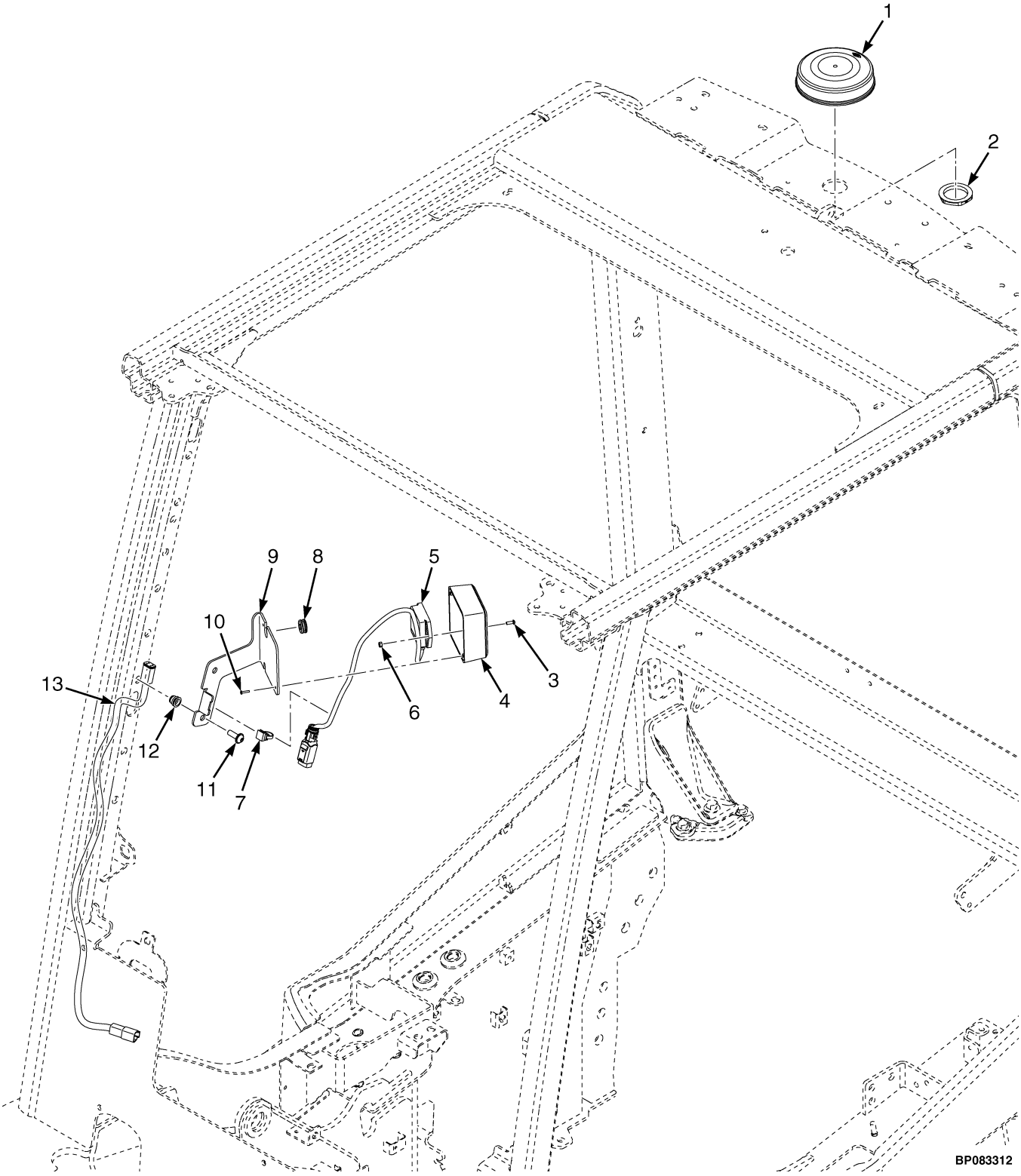

©2026 HYSTER COMPANY

TELEMETRY OPTIONS

ITEM	PART NO.	DESCRIPTION	QTY
1	4656768	Antenna (4G North AM ATT Radio) (With Software)	1
1	4656769	Antenna (4G US Only Verizon Radio) (With Software)	1
1	4665534	Antenna (4G Australia/New Zealand Radio) (With Software) (MFG Option)	1
2	4656770	Nut	1
3	4216684	Screw	2
4	~~4699672~~		
	81008501	Enclosure (Card Reader)	1
5	4618303	Card-ID Reader (ISO-Prox)	1
5	4618304	Card-ID Reader (HID Standard Prox)	1
5	4618305	Card-ID Reader (IClass/MIFARE Prox)	1
6	4258696	Nut	2
7	1616345	Strap Clamp	1
8	1361557	Grommet	1
9	4699673	Bracket - Card Reader	1
10	4694068	Screw	2
11	4273869	Screw	2
12	1531557	Insert	2
12	1530243	Insert (Alternate Part)	2
13	4702474	Wire Harness - Card Reader Jumper	1

©2026 HYSTER COMPANY

TELEMETRY OPTIONS (FIGURE 11-70)
ALTERNATE CONFIGURATION

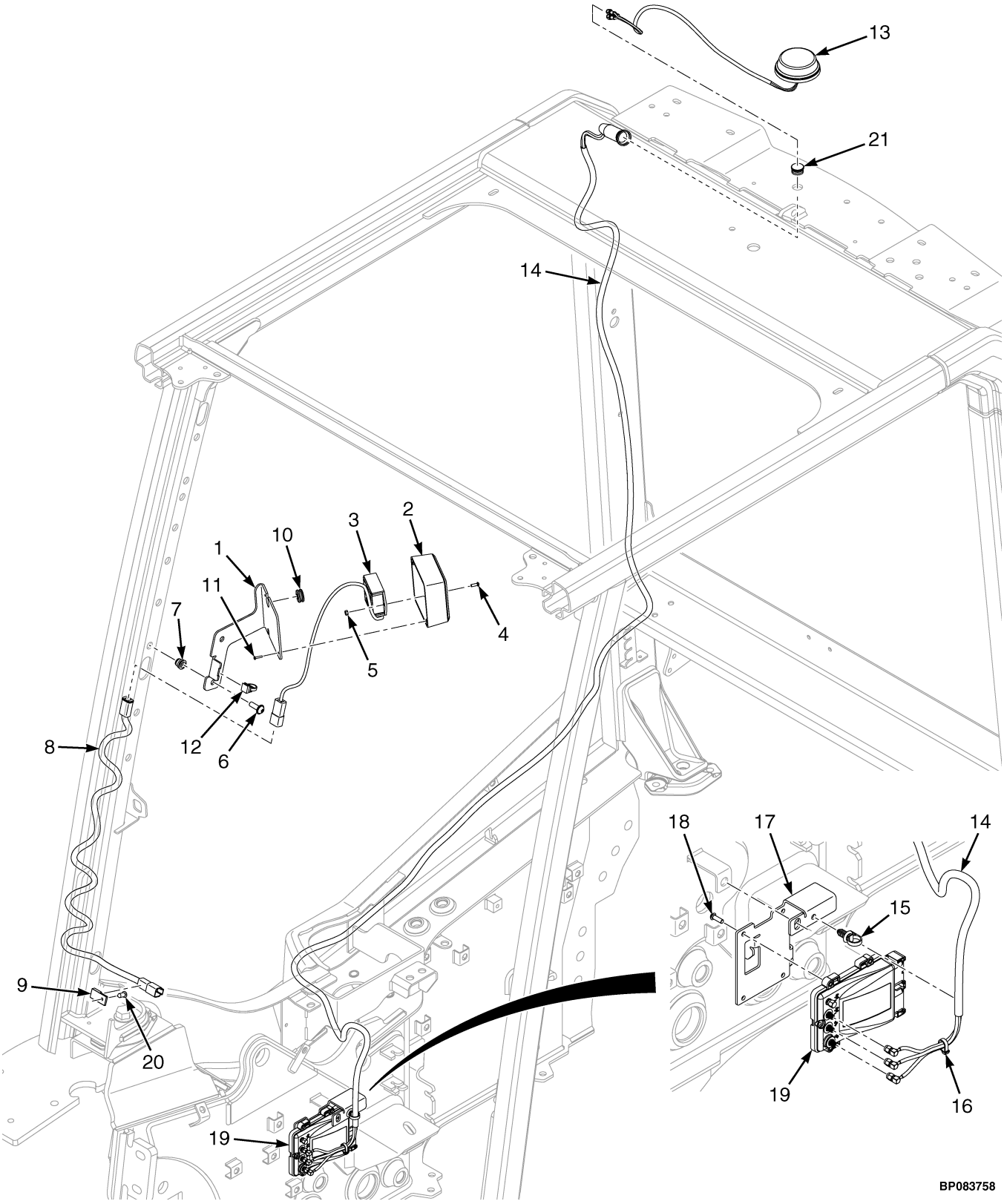

©2026 HYSTER COMPANY

TELEMETRY OPTIONS
ALTERNATE CONFIGURATION

ITEM	PART NO.	DESCRIPTION	QTY
1	4699673	Bracket - Card Reader	1
2	~~4699672~~		
	81008501	Enclosure (Card Reader)	1
3	4618305	Card-ID Reader (IClass/MIFARE Prox)	1
3	4618304	Card-ID Reader (HID Standard Prox)	1
3	4618303	Card-ID Reader (ISO-Prox)	1
4	4216684	Screw	2
5	4258696	Nut	2
6	4273869	Screw	2
7	1531557	Insert	2
7	1530243	Insert (Alternate Part)	2
8	4716705	Wire Harness (Card Reader Jumper)	1
9	1500912	Clip	1
10	1361557	Grommet	1
11	4694068	Screw	2
12	1616345	Strap Clamp	1
13	4697401	Antenna (Cell-WiFi-GPS)	1
14	4716470	Cable Assy (Extension)	1
15	1616343	Strap Clamp	1
16	2004005	Strap Clamp	1
17	4330659	Bracket - VAM (PS)	1
18	4312482	Screw	4
19	4715966	Controller (NCEA VAM, Cell/GSM/WiFi, 500K BAUD)	1
19	4715967	Controller - NCEA VAM, CDMA, 500K BAUD	1
20	1582464	Fastener	1
21	**a** 4259677	Plug	1

FOOTNOTES:

a Not used if item 13 antenna is installed.

TILT SENSOR (FIGURE 11-71)

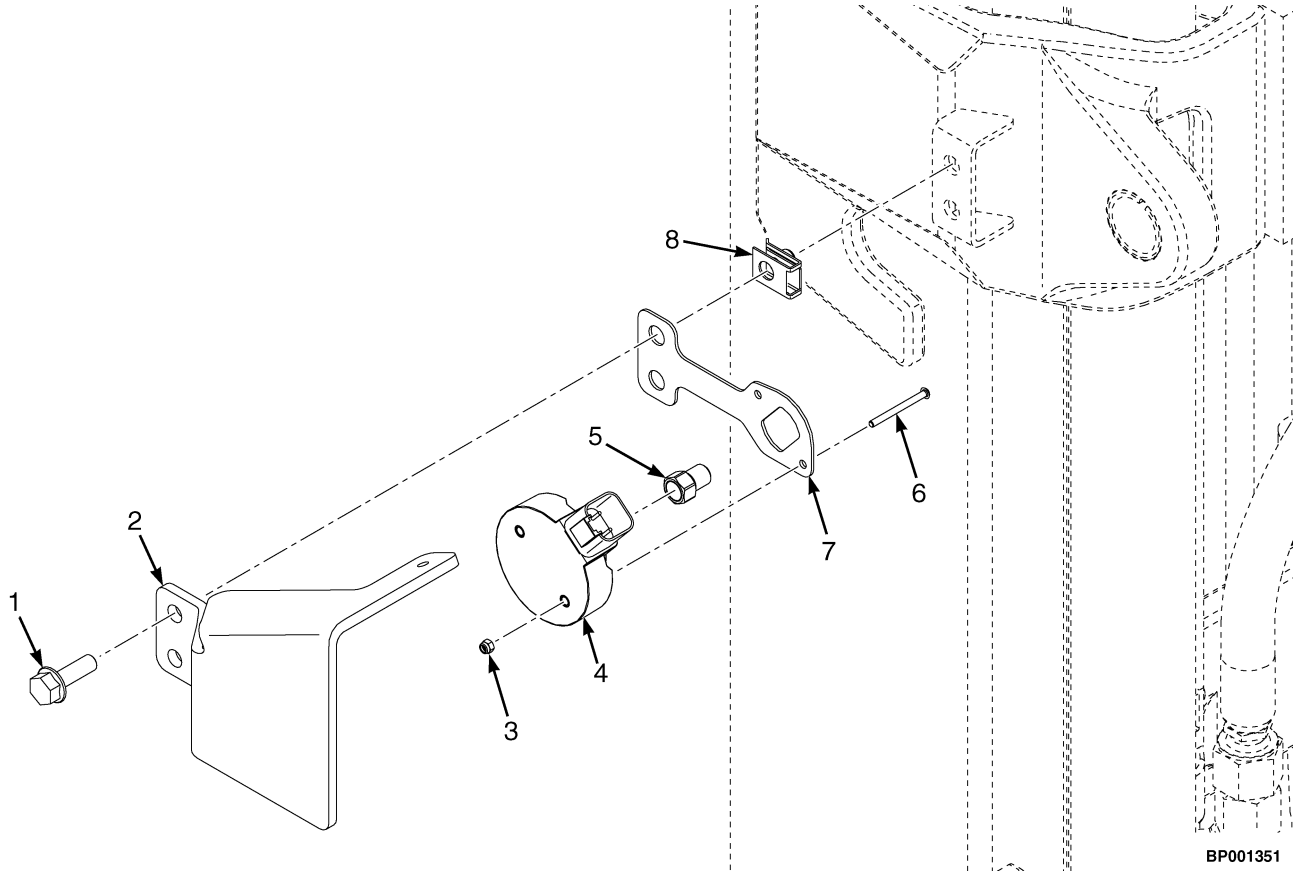

ITEM	PART NO.	DESCRIPTION	QTY
1	4043638	Capscrew	2
2	4301152	Bracket	1
2	4396771	Bracket (Alternate Part)	1
3	4203826	Nut	2
4	4703982	Sensor (Tilt)	1
5	4302934	Magnet	1
6	4294786	Screw	2
7	4294162	Bracket - Mast Sensor	1
8	4101267	Nut , Foldover	2

See Service Manual for service procedures.
©2026 HYSTER COMPANY

TRUCK START (FIGURE 11-72)
PUSHBUTTON WITH REMOTE KEY SWITCH

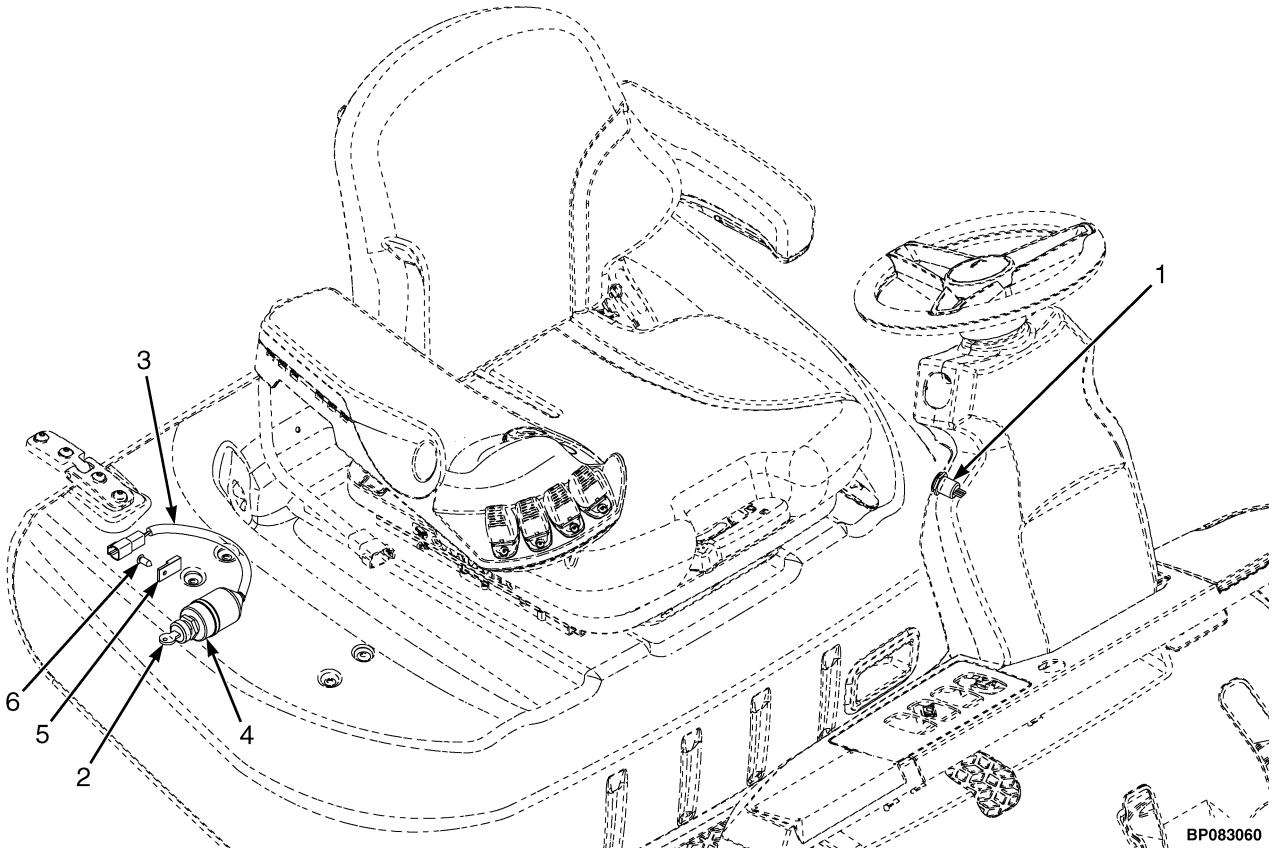

KEY:
A: Pushbutton Start
B: Key Start

ITEM	PART NO.	DESCRIPTION	QTY A	QTY B
1	4701488	Push Button Switch	1	..
1	4153136	Ignition Switch (w/o Key)	..	1
1	1337197	Key Set	..	1
1	186304	Key	..	2
2	2058111	Ignition Switch (Keyless Start/Start w/Push Button)	1	1
2	262798	Key Set	1	1
3	4701079	Wire Harness - Remote Key Switch	1	1
3	1493465	Connector (2 Pin)	1	1
3	1330414	Connector (Secondary Lock)	1	1
3	1330437	Terminal (Pin)	2	2
4	190380	Boot	1	1
5	1500912	Clip	1	1
6	1582464	Fastener	1	1

WIRE HARNESS (FIGURE 11-73)
12V AUXILIARY SUPPLY

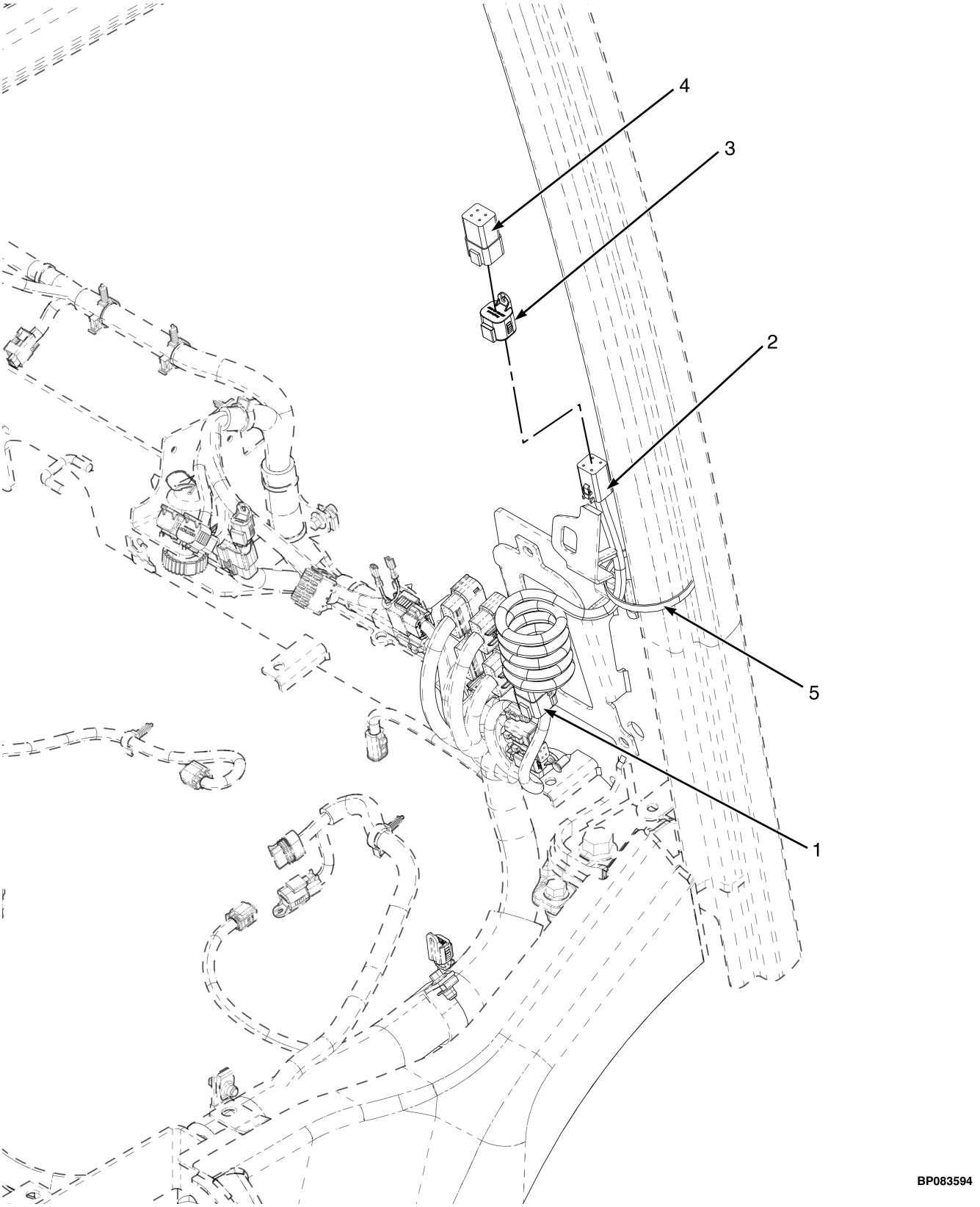

©2026 HYSTER COMPANY

ITEM	PART NO.	DESCRIPTION	QTY
	4684042	Wire Harness (12V Aux Supply)	1
1	. . . . .	Connector Assembly (CRP221) To Chassis Harness	1
1	4047669	Connector (DTP REC 4-Pin)	1
1	1514598	Connector (Secondary Lock)	1
1	866401	Terminal	4
2	. . . . .	Connector Assembly (CPS222) 12V Auxiliary Terminal	1
2	1632865	Connector (DTP PLU 4 Socket)	1
2	1514603	Connector (Secondary Lock)	1
2	1554359	Terminal	4
3	**a** 4312827	Cap	1
4	. . . . .	Connector Assembly (12v Aux Power Add on kit)	1
4	4047669	Connector (DTP REC 4-Pin)	1
4	1514598	Connector (Secondary Lock)	1
4	866401	Terminal	4
5	129563	Strap Clamp	14
	4349336	Kit - Add-On Connector, 12v Aux Power	1

FOOTNOTES:

a not used with 12v Aux Power Add-on kit

WIRE HARNESS (FIGURE 11-74)
AUDIBLE ALARM

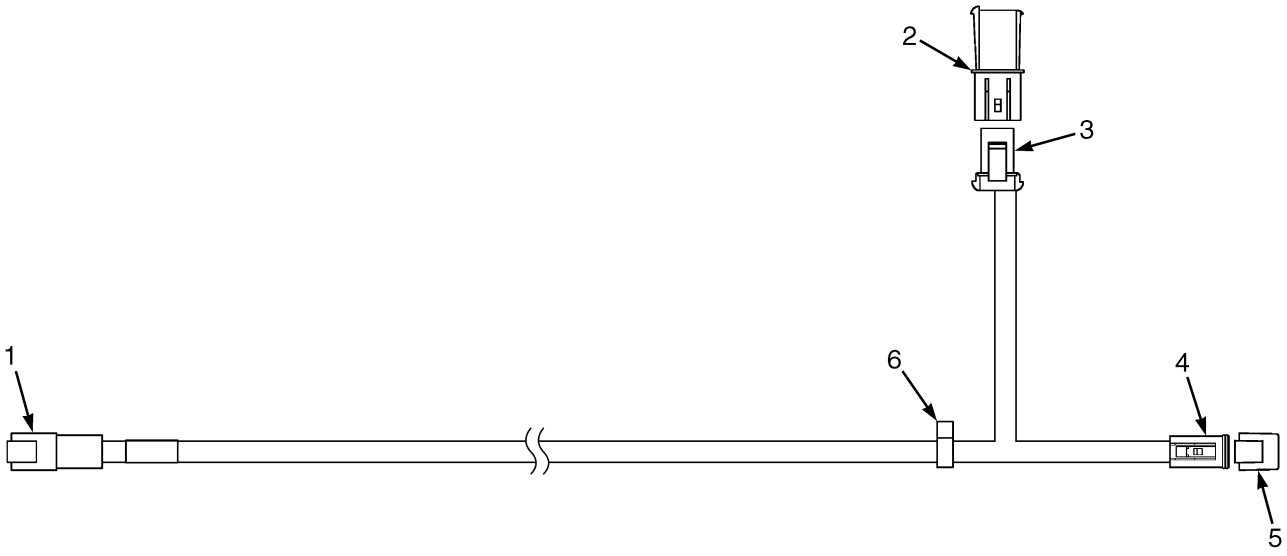

BP083206

ITEM	PART NO.	DESCRIPTION	QTY
	4700685	Wire Harness - Rear Audible and Low Coolant	1
1	. . . . .	Connector Assembly (CRP587) To Chassis Harness	1
1	~~4170087~~		
	1463184	Connector Housing	1
1	~~4046140~~		
	1463193	Connector	1
1	1463138	Terminal (Pin)	4
2	. . . . .	Connector Assembly (CRP280) Cap	1
2	1329150	Connector	1
2	1329151	Secondary Lock	1
2	1327164	Terminator	2
3	. . . . .	Connector Assembly (CPS280) Low Coolant Level Sensor	1
3	4052151	Connector	1
3	1329151	Secondary Lock	1
3	1330281	Terminal	2
4	. . . . .	Connector Assembly (CPS594) To Audible Alarm Jumper Harness	1
4	1490242	Connector (2 Way)	1
4	1490243	Connector (Secondary Lock)	1
4	1330438	Terminal (Socket)	2
5	1626727	Connector	1
6	1509888	Clip (Conduit)	1

©2026 HYSTER COMPANY

WIRE HARNESS (FIGURE 11-75)
AUDIBLE ALARM JUMPER

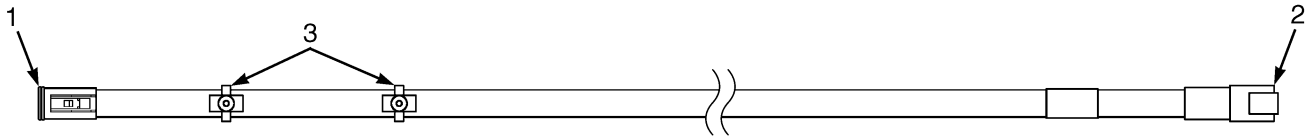

BP083267

ITEM	PART NO.	DESCRIPTION	QTY
	4703902	Wire Harness - Audible Alarm Jumper (H40A)	1
	a 4700686	Wire Harness - Audible Alarm Jumper (H50A)	1
	b 4703902	Wire Harness - Audible Alarm Jumper (H50A)	1
	4706932	Wire Harness - Audible Alarm Jumper (H55A-H60A)	1
	a 4712421	Wire Harness - Audible Alarm Jumper (H70A)	1
	b 4706932	Wire Harness - Audible Alarm Jumper (H70A)	1
1	. . . . .	Connector Assembly (CPS254) Audible Alarm	1
1	1490242	Connector (2 Way)	1
1	1490243	Connector (Secondary Lock)	1
1	1330438	Terminal (Socket)	2
2	. . . . .	Connector Assembly (CRP594) To Audible Alarm Harness	1
2	1493465	Connector (2 Pin)	1
2	1330414	Connector (Secondary Lock)	1
2	1330437	Terminal (Pin)	2
3	4140361	Cable Clip	2

FOOTNOTES:

a → 10/2024

b 10/2024 →

WIRE HARNESS (FIGURE 11-76)
AUX 2 — CONTACTOR KEYED POWER

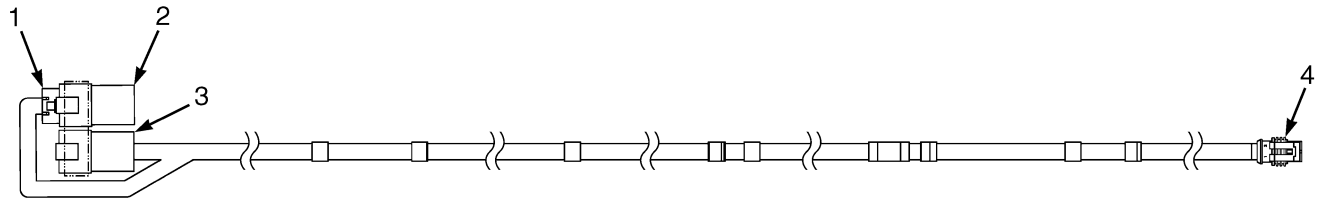

BP083392

ITEM	PART NO.	DESCRIPTION	QTY
	4712490	Wire Harness - Aux 2, Contactor Keyed Power	1
1	. . . . .	Connector Assembly (CPS220B) Aux 12V Power Connector #2	1
1	1632865	Connector (DTP PLU 4 Socket)	1
1	1514603	Connector (Secondary Lock)	1
1	1554359	Terminal	4
2	. . . . .	Connector Assembly (CRP220B) End Cap	1
2	4047669	Connector (DTP REC 4-Pin)	1
2	1514598	Connector (Secondary Lock)	1
2	1330439	Plug Seal	4
3	. . . . .	Connector Assembly (CRP220) Aux 12V Power Connector #2	1
3	4047669	Connector (DTP REC 4-Pin)	1
3	1514598	Connector (Secondary Lock)	1
3	866401	Terminal	4
4	. . . . .	Connector Assembly (CPS386) Contactor Coil	1
4	1537135	Connector Body	1
4	1676212	Terminal	2

©2026 HYSTER COMPANY

NOTES

WIRE HARNESS (FIGURE 11-77)

CAB — LOWER

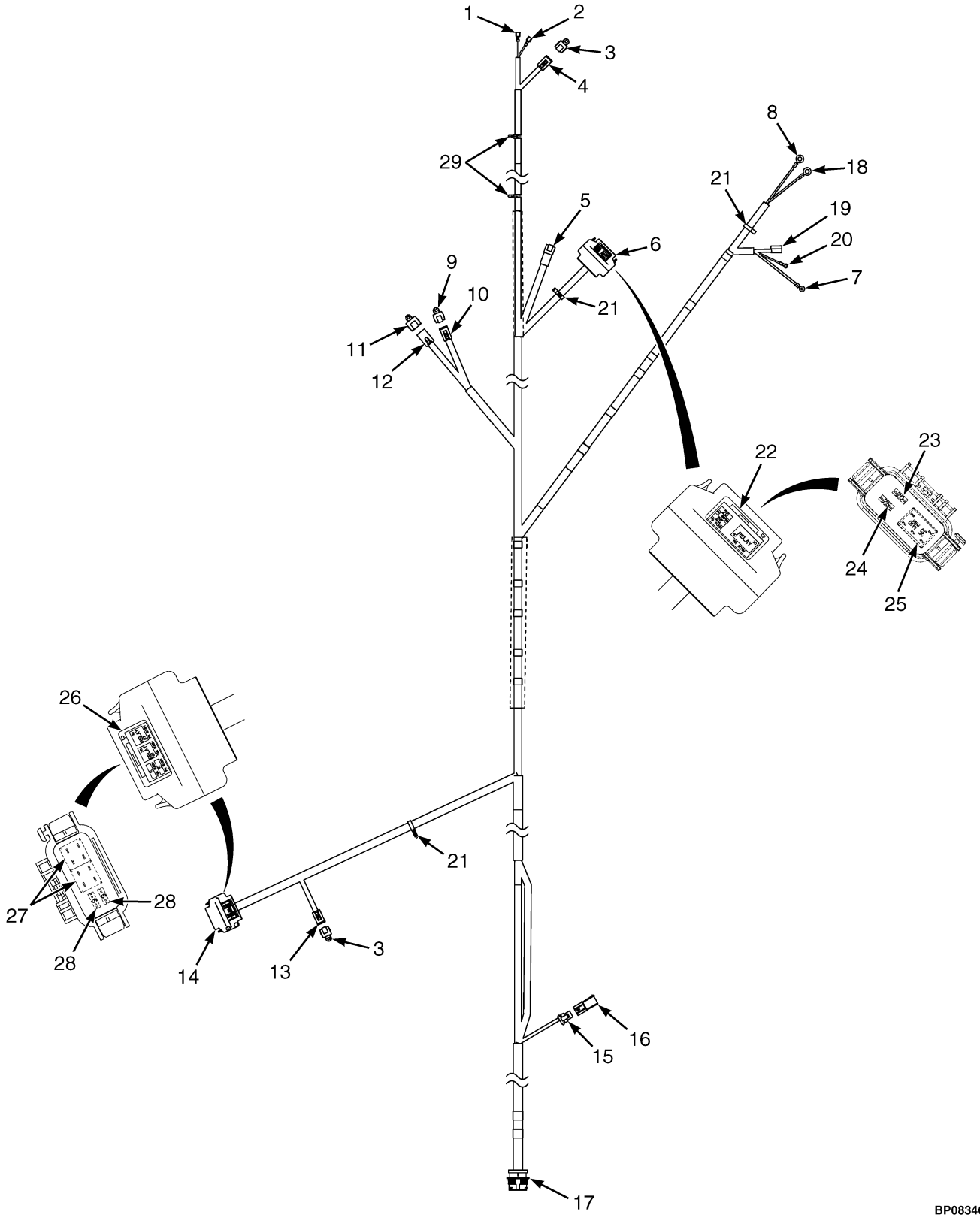

©2026 HYSTER COMPANY

WIRE HARNESS
CAB – LOWER

ITEM	PART NO.	DESCRIPTION	QTY
	4711711	Wire Harness (Lower)	1
1	. . . . .	Connector Assembly (T350) Front Heated Screen (+)	1
1	1521309	Connector Body	1
2	. . . . .	Connector Assembly (T351) Front Heated Screen (-)	1
2	1521309	Connector Body	1
3	4036523	Cap	2
4	. . . . .	Connector Assembly (CPS340) Front Wiper Motor	1
4	1489656	Connector (4-Way)	1
4	1489657	Connector (Secondary Lock)	1
4	1330438	Terminal (Socket)	4
5	. . . . .	Connector Assembly (CRP397) Cab Jumper	1
5	1525589	Connector (6-Pin)	1
5	1330417	Connector (Secondary Lock)	1
5	1330437	Terminal (Pin)	6
6	. . . . .	Connector Assembly (CPS394) Cab PDM 2	1
6	4273393	Fuse Box	1
6	4273395	Connector Lock	1
6	4229186	Terminal (Socket)	4
6	1502919	Plug (Junior Timer Blanking Seal)	4
6	4177244	Terminal (Socket)	4
7	. . . . .	Connector Assembly (T389) 12V Ground	1
7	1566145	E-Ring (M8)	1
8	. . . . .	Connector Assembly (T388) 12V Power HVAC Contactor	1
8	148613	E-Ring	1
9	4036873	Cap (6 Way)	1
10	. . . . .	Connector Assembly (CPS360) HVAC Control	1
10	1493430	Connector (6 Way Housing)	1
10	1529052	Connector (Secondary Lock)	1
10	1330438	Terminal (Socket)	5
10	1484377	Plug	1
11	4312827	Cap	4
12	. . . . .	Connector Assembly (CPS359) HVAC Main	1
12	1632865	Connector (DTP PLU 4 Socket)	1
12	1514603	Connector (Secondary Lock)	1
12	1554359	Terminal	4
13	. . . . .	Connector Assembly (CPS599) Washer Jumper	1
13	1489656	Connector (4-Way)	1
13	1489657	Connector (Secondary Lock)	1
13	1330438	Terminal (Socket)	4
14	. . . . .	Connector Assembly (CPS393) Cab PDM 1	1
14	4273393	Fuse Box	1
14	4273395	Connector Lock	1
14	4177244	Terminal (Socket)	12
15	. . . . .	Connector Assembly (CPS396) A/C Compressor	1
15	1329152	Plug	1
15	1329151	Secondary Lock	1
15	1330281	Terminal	2
16	. . . . .	Connector Assembly (CRP396) End Cap	1
16	1329150	Connector	1
16	1329151	Secondary Lock	1

©2026 HYSTER COMPANY

WIRE HARNESS
CAB – LOWER

ITEM	PART NO.	DESCRIPTION	QTY
16	1327164	Terminator	2
17	. . . . .	Connector Assembly (CRS380) Cab Interconnect	1
17	4190278	Connector	1
17	1554359	Terminal	4
17	1330438	Terminal (Socket)	12
17	1484377	Plug	7
17	1463139	Terminal	6
18	. . . . .	Connector Assembly (T390) 12V Ground	1
18	1566145	E-Ring (M8)	1
19	. . . . .	Connector Assembly (CPS387) Wiper Contactor	1
19	1537135	Connector Body	1
19	1676212	Terminal	2
20	. . . . .	Connector Assembly (T385) 12V Power	1
20	1524397	E-Ring	1
21	1509890	Clip	3
22	4694208	Label - 12 pin PDM	1
23	1528132	Fuse (20 Amp)	1
24	1544255	Fuse (25 Amp)	1
25	4273566	Relay	1
26	4694209	Label - 12 pin PDM	1
27	1528315	Relay (20 Amp)	2
28	1498044	Fuse (5 Amp)	2
29	4046441	Clip	2

©2026 HYSTER COMPANY

NOTES

WIRE HARNESS (FIGURE 11-78)
CAB — LOWER (ALTERNATE PART)

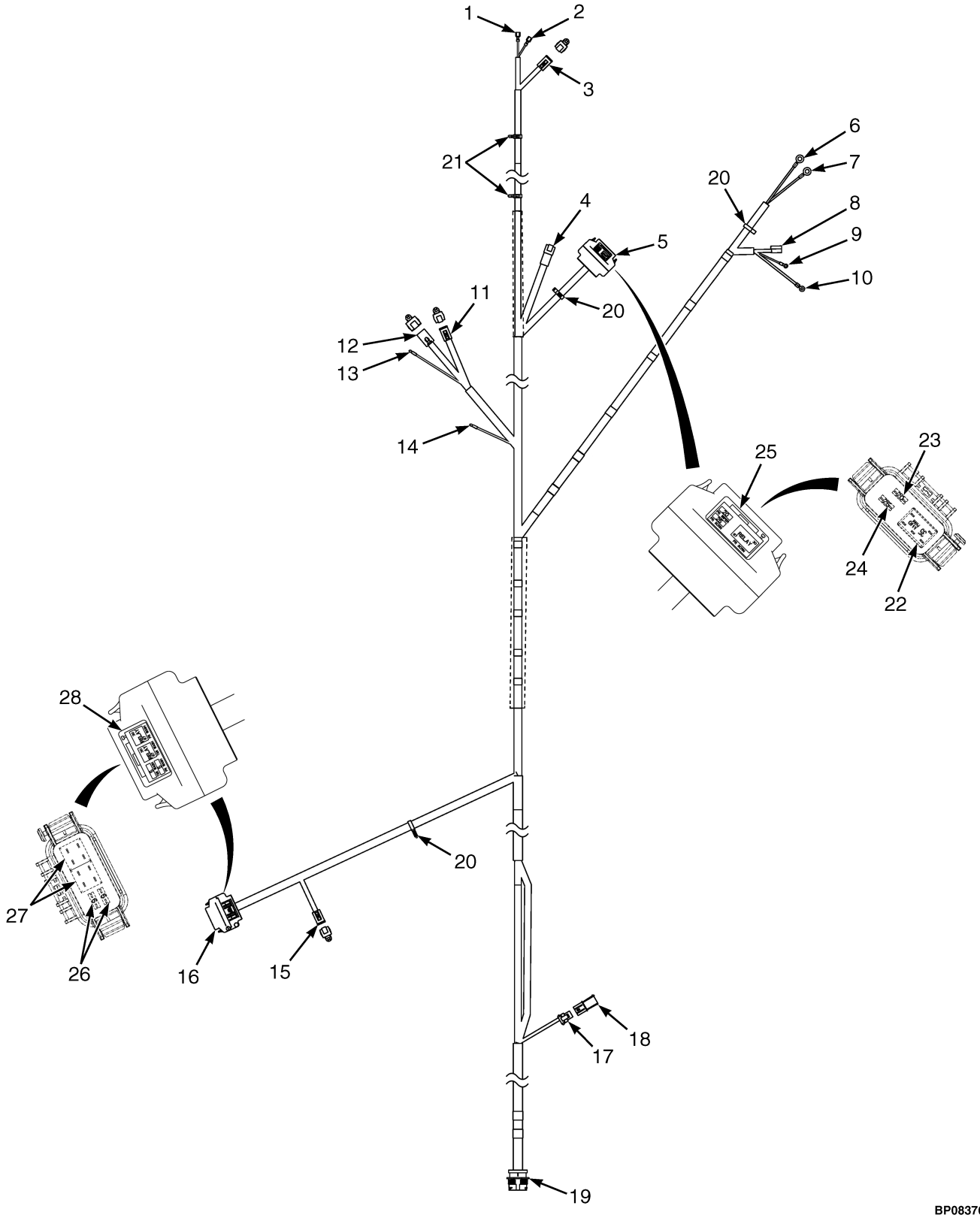

©2026 HYSTER COMPANY

WIRE HARNESS
CAB – LOWER (ALTERNATE PART)

ITEM	PART NO.	DESCRIPTION	QTY
	4711711	Wire Harness (Lower)	1
	4732559	Wire Harness (Cab - Lower) (Alternate Part)	1
1	. . . . .	Connector Assembly (T350) Front Heated Screen (+)	1
1	1521309	Connector Body	1
1	4380446	Terminal (Alternate Part)	1
2	. . . . .	Connector Assembly (T351) Front Heated Screen (-)	1
2	1521309	Connector Body	1
2	4380446	Terminal (Alternate Part)	1
3	. . . . .	Connector Assembly (CPS340) Front Wiper Motor	1
3	1489656	Connector (4-Way)	1
3	1489657	Connector (Secondary Lock)	1
3	1330438	Terminal (Socket)	4
3	4036523	Cap	1
4	. . . . .	Connector Assembly (CRP397) Cab Jumper	1
4	1525589	Connector (6-Pin)	1
4	1330417	Connector (Secondary Lock)	1
4	1330437	Terminal (Pin)	6
5	. . . . .	Connector Assembly (CPS394) Cab PDM 2	1
5	4273393	Fuse Box	1
5	4273395	Connector Lock	1
5	4229186	Terminal (Socket)	4
5	1502919	Plug (Junior Timer Blanking Seal)	4
5	4177244	Terminal (Socket)	4
5	1479109	Seal	4
5	1562649	Seal	4
6	. . . . .	Connector Assembly (T389) 12V Ground	1
6	1566145	E-Ring (M8)	1
7	. . . . .	Connector Assembly (T390) 12V Ground	1
7	1566145	E-Ring (M8)	1
8	. . . . .	Connector Assembly (CPS387) Wiper Contactor	1
8	1537135	Connector Body	1
8	233141	Terminal (Receptacle)	2
9	. . . . .	Connector Assembly (T385) 12V Power Wiper Connector	1
9	1524397	E-Ring	1
10	. . . . .	Connector Assembly (T388) 12V Power HVAC Connector	1
10	148613	E-Ring	1
11	. . . . .	Connector Assembly (CPS360) HVAC Control	1
11	1493430	Connector (6 Way Housing)	1
11	1529052	Connector (Secondary Lock)	1
11	1330438	Terminal (Socket)	5
11	1484377	Plug	1
11	4036873	Cap (6 Way)	1
12	. . . . .	Connector Assembly (CPS359) HVAC Main	1
12	1632865	Connector (DTP PLU 4 Socket)	1
12	1514603	Connector (Secondary Lock)	1
12	1554359	Terminal	4
12	4312827	Cap	1
13	. . . . .	Connector Assembly (T347) To Heater	1
13	1324308	Terminal	1
13	1324307	Sleeve	1

WIRE HARNESS
CAB – LOWER (ALTERNATE PART)

ITEM	PART NO.	DESCRIPTION	QTY
14	. . . . .	Connector Assembly (T346) Chassis Heater Interconnection	1
14	1324308	Terminal	1
14	1324307	Sleeve	1
15	. . . . .	Connector Assembly (CPS599) Washer Jumper	1
15	1489656	Connector (4-Way)	1
15	1489657	Connector (Secondary Lock)	1
15	1330438	Terminal (Socket)	4
15	4036523	Cap	1
16	. . . . .	Connector Assembly (CPS393) Cab PDM 1	1
16	4273393	Fuse Box	1
16	4273395	Connector Lock	1
16	4177244	Terminal (Socket)	12
16	1562649	Seal	12
17	. . . . .	Connector Assembly (CPS396) A/C Compressor	1
17	1329152	Plug	1
17	1329151	Secondary Lock	1
17	1330281	Terminal	2
17	1402888	Seal (Purple)	2
18	. . . . .	Connector Assembly (CRP396) End Cap	1
18	1329150	Connector	1
18	1329151	Secondary Lock	1
18	1327164	Terminator	2
19	. . . . .	Connector Assembly (CRS380) Cab Interconnect	1
19	4190278	Connector	1
19	1554359	Terminal	4
19	1330438	Terminal (Socket)	12
19	1484377	Plug	7
19	1463139	Terminal	6
20	1509890	Clip	3
21	4046441	Clip	2
22	4273566	Relay	1
23	1528132	Fuse (20 Amp)	1
24	1544255	Fuse (25 Amp)	1
25	4694208	Label - 12 pin PDM	1
26	1498044	Fuse (5 Amp)	2
27	1528315	Relay (20 Amp)	2
28	4694209	Label - 12 pin PDM	1

See Service Manual for service procedures.
©2026 HYSTER COMPANY

NOTES

WIRE HARNESS (FIGURE 11-79)
CAB — UPPER

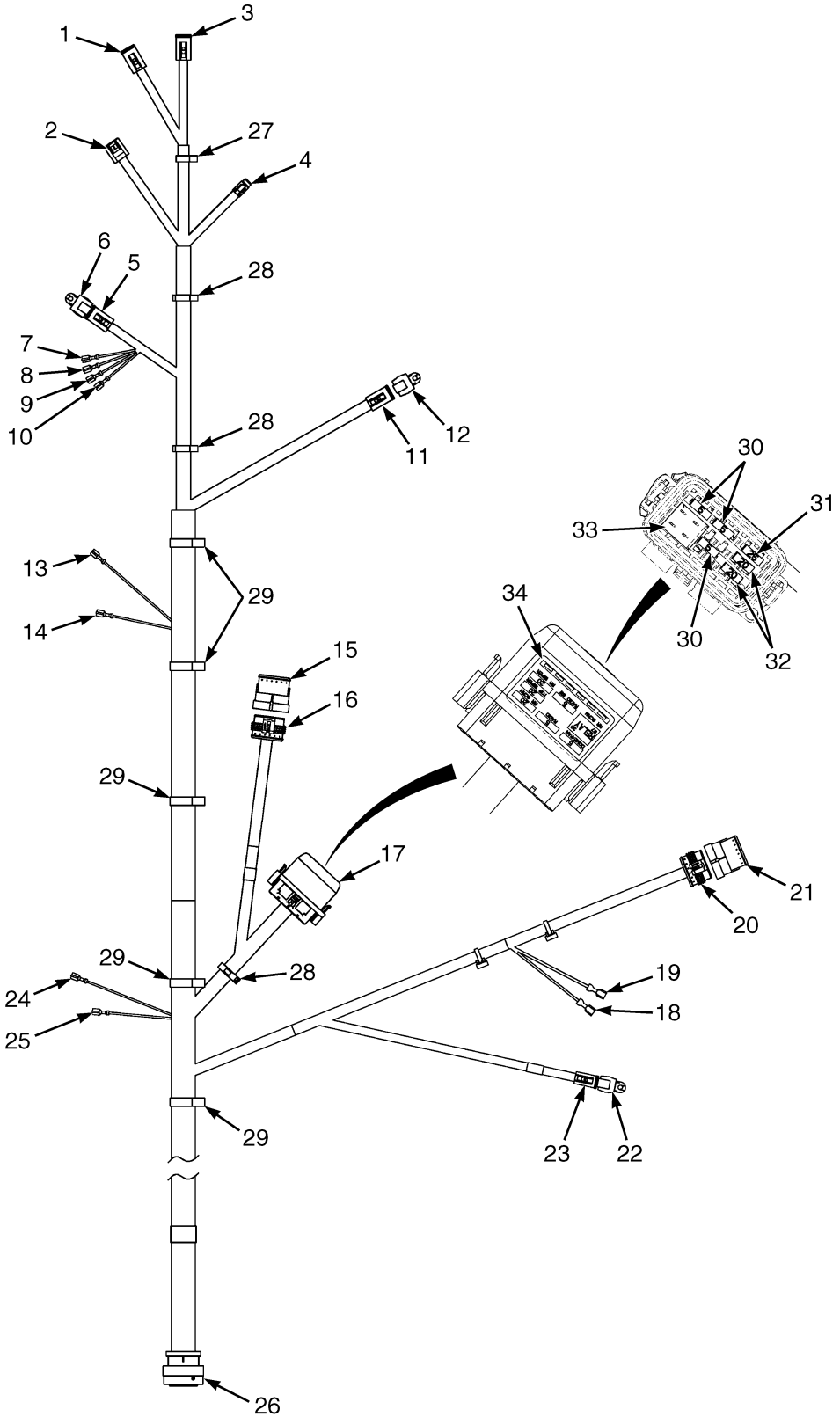

©2026 HYSTER COMPANY

WIRE HARNESS
CAB – UPPER

ITEM	PART NO.	DESCRIPTION	QTY
	4711710	Wire Harness (Upper)	1
1	. . . . .	Connector Assembly (CPS391) CAN Switch	1
1	1493430	Connector (6 Way Housing)	1
1	1529052	Connector (Secondary Lock)	1
1	1330438	Terminal (Socket)	4
1	1484377	Plug	2
2	. . . . .	Connector Assembly (CPS354) Dome Light Switch	1
2	1484555	Connector Body (10-Way)	1
2	4178577	Terminal	4
3	. . . . .	Connector Assembly (CPS392) CAN Switch	1
3	1489656	Connector (4-Way)	1
3	1489657	Connector (Secondary Lock)	1
3	1330438	Terminal (Socket)	4
4	. . . . .	Connector Assembly (CPS355) Dome Light	1
4	1490242	Connector (2 Way)	1
4	1490243	Connector (Secondary Lock)	1
4	1330438	Terminal (Socket)	2
5	. . . . .	Connector Assembly (CPS370) Radio	1
5	1489656	Connector (4-Way)	1
5	1489657	Connector (Secondary Lock)	1
5	1330438	Terminal (Socket)	3
5	1484377	Plug	1
6	4036523	Cap	1
7	. . . . .	Connector Assembly (T376) Radio (-)	1
7	248196	Terminal	1
8	. . . . .	Connector Assembly (T375) Radio (+)	1
8	248196	Terminal	1
9	. . . . .	Connector Assembly (T374) Radio (-)	1
9	248196	Terminal	1
10	. . . . .	Connector Assembly (T373) Radio (+)	1
10	248196	Terminal	1
11	. . . . .	Connector Assembly (CPS361) HVAC Condenser	1
11	1493430	Connector (6 Way Housing)	1
11	1529052	Connector (Secondary Lock)	1
11	1330438	Terminal (Socket)	6
12	4036873	Cap (6 Way)	1
13	. . . . .	Connector Assembly (T372) RH Speaker (-)	1
13	248196	Terminal	1
14	. . . . .	Connector Assembly (T371) RH Speaker (+)	1
14	248196	Terminal	1
15	. . . . .	Connector Assembly (CRP342) End Cap	1
15	1608759	Electrical Connector (6 Way)	1
15	2069381	Plug	6
16	. . . . .	Connector Assembly (CPS342) Top Wiper Motor	1
16	1608758	Electrical Connector (6 Way)	1
16	1508232	Terminal (Pin)	4
16	2069381	Plug	2
17	. . . . .	Connector Assembly (CPS395) Cab PDM	1
17	4103784	Connector Body	1
17	1521989	Terminal	6

©2026 HYSTER COMPANY

WIRE HARNESS
CAB – UPPER

ITEM	PART NO.	DESCRIPTION	QTY
17	1327164	Terminator	2
17	1330281	Terminal	10
18	. . . . .	Connector Assembly (T353) Rear Heated Screen (+)	1
18	1468841	Connector	1
19	. . . . .	Connector Assembly (T352) Rear Heated Screen (-)	1
19	1468841	Connector	1
20	. . . . .	Connector Assembly (CPS344) Rear Wiper Motor	1
20	1608758	Electrical Connector (6 Way)	1
20	1508232	Terminal (Pin)	4
20	2069381	Plug	2
21	. . . . .	Connector Assembly (CRP344) End Cap	1
21	1608759	Electrical Connector (6 Way)	1
21	2069381	Plug	6
22	4035905	Cap (DT 2-Way)	1
23	. . . . .	Connector Assembly (CPS356) Operator Fan	1
23	1490242	Connector (2 Way)	1
23	1490243	Connector (Secondary Lock)	1
23	1330438	Terminal (Socket)	2
24	. . . . .	Connector Assembly (T377) LH Speaker (+)	1
24	248196	Terminal	1
25	. . . . .	Connector Assembly (T378) LH Speaker (-)	1
25	248196	Terminal	1
26	. . . . .	Connector Assembly (CPP380) Cab Interconnect	1
26	4190277	Connector	1
26	866401	Terminal	4
26	1330437	Terminal (Pin)	12
26	1484377	Plug	7
26	1463138	Terminal (Pin)	6
27	4046441	Clip	1
28	1500900	Clip	3
29	1534282	Clip	5
30	1498044	Fuse (5 Amp)	2
31	1544255	Fuse (25 Amp)	1
32	1528132	Fuse (20 Amp)	2
33	1528315	Relay (20 Amp)	1
34	~~4684003~~		
	4717926	Label - 18 Pin PDM	1

©2026 HYSTER COMPANY

NOTES

WIRE HARNESS (FIGURE 11-80)
CAB — UPPER (ALTERNATE PART)

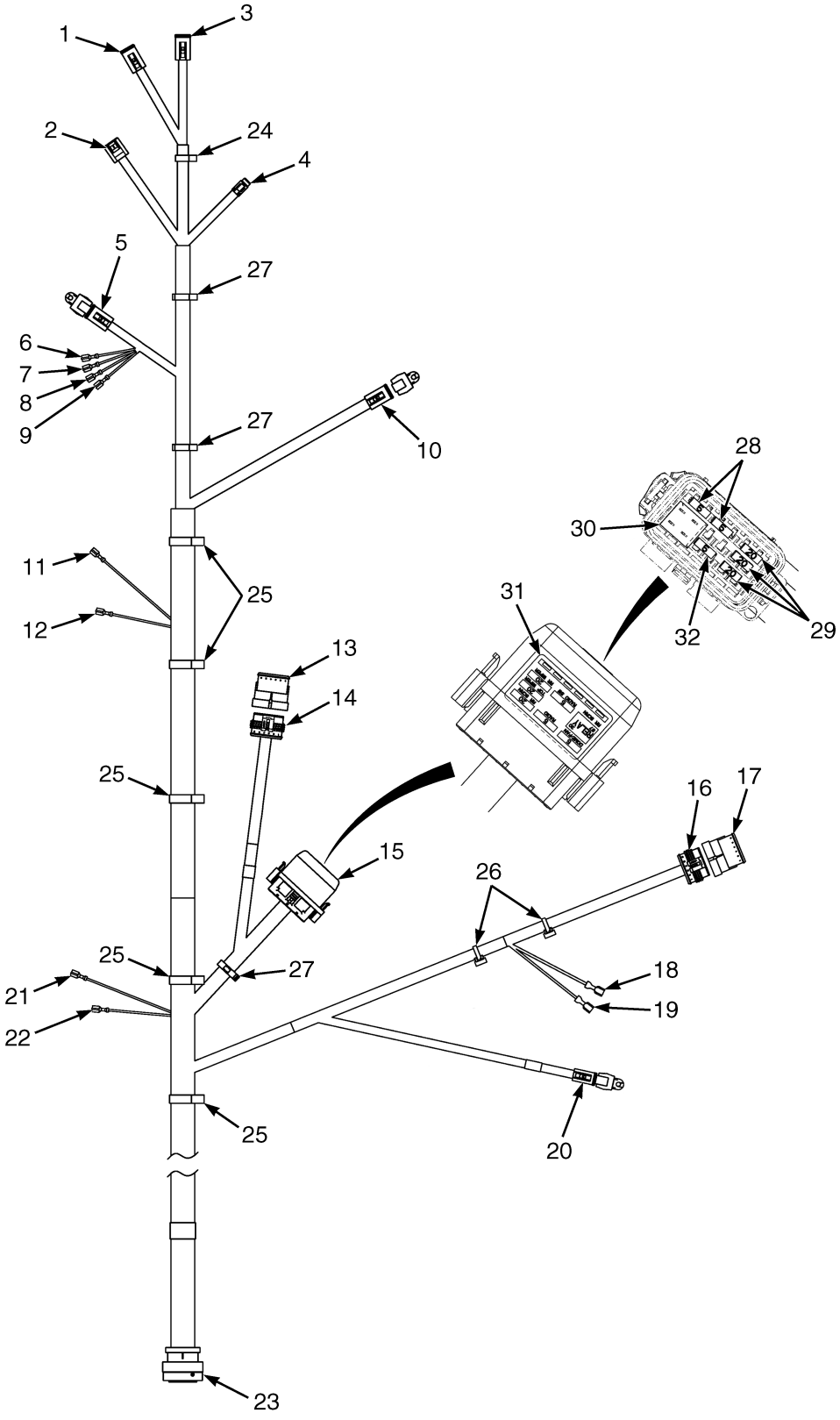

©2026 HYSTER COMPANY

WIRE HARNESS
CAB – UPPER (ALTERNATE PART)

ITEM	PART NO.	DESCRIPTION	QTY
	4711710	Wire Harness (Upper)	1
1	. . . . .	Connector Assembly (CPS391) CAN Switch	1
1	1493430	Connector (6 Way Housing)	1
1	1529052	Connector (Secondary Lock)	1
1	1330438	Terminal (Socket)	4
1	1484377	Plug	2
2	. . . . .	Connector Assembly (CPS354) Dome Light Switch	1
2	1484555	Connector Body (10-Way)	1
2	4178577	Terminal	4
3	. . . . .	Connector Assembly (CPS392) CAN Switch	1
3	1489656	Connector (4-Way)	1
3	1489657	Connector (Secondary Lock)	1
3	1330438	Terminal (Socket)	4
4	. . . . .	Connector Assembly (CPS355) Dome Light	1
4	1484557	Connector (2 Socket)	1
4	1484558	Connector (Secondary Lock)	1
4	1463139	Terminal	2
5	. . . . .	Connector Assembly (CPS370) Radio	1
5	1489656	Connector (4-Way)	1
5	1489657	Connector (Secondary Lock)	1
5	1330438	Terminal (Socket)	3
5	1484377	Plug	1
5	4036523	Cap	1
6	. . . . .	Connector Assembly (T376) Radio (-)	1
6	248196	Terminal	1
6	4380445	Terminal (Alternate Part)	1
7	. . . . .	Connector Assembly (T375) Radio (+)	1
7	248196	Terminal	1
7	4380445	Terminal (Alternate Part)	1
8	. . . . .	Connector Assembly (T374) Radio (-)	1
8	248196	Terminal	1
8	4380445	Terminal (Alternate Part)	1
9	. . . . .	Connector Assembly (T373) Radio (+)	1
9	248196	Terminal	1
9	4380445	Terminal (Alternate Part)	1
10	. . . . .	Connector Assembly (CPS361) HVAC Condenser	1
10	1493430	Connector (6 Way Housing)	1
10	1529052	Connector (Secondary Lock)	1
10	1330438	Terminal (Socket)	6
10	4036873	Cap (6 Way)	1
11	. . . . .	Connector Assembly (T372) RH Speaker (-)	1
11	248196	Terminal	1
11	4380445	Terminal (Alternate Part)	1
12	. . . . .	Connector Assembly (T371) RH Speaker (+)	1
12	248196	Terminal	1
12	4380445	Terminal (Alternate Part)	1
13	. . . . .	Connector Assembly (CRP342) End Cap	1
13	1608759	Electrical Connector (6 Way)	1
13	2069381	Plug	6
14	. . . . .	Connector Assembly (CPS342) Top Wiper Motor	1

©2026 HYSTER COMPANY

WIRE HARNESS
CAB – UPPER (ALTERNATE PART)

ITEM	PART NO.	DESCRIPTION	QTY
14	1608758	Electrical Connector (6 Way)	1
14	1508232	Terminal (Pin)	4
14	2069381	Plug	2
15	. . . . .	Connector Assembly (CPS395) Cab PDM	1
15	4103784	Connector Body	1
15	1521989	Terminal	6
15	1327164	Terminator	2
15	1330281	Terminal	10
15	1329148	Terminal	2
15	1323579	Seal	8
15	1402888	Seal (Purple)	8
16	. . . . .	Connector Assembly (CPS344) Rear Wiper Motor	1
16	1608758	Electrical Connector (6 Way)	1
16	1508232	Terminal (Pin)	4
16	2069381	Plug	2
16	2060555	Wire Seal (Yellow)	4
17	. . . . .	Connector Assembly (CRP344) End Cap	1
17	1608759	Electrical Connector (6 Way)	1
17	2069381	Plug	6
18	. . . . .	Connector Assembly (T352) Rear Heated Screen (-)	1
18	1468841	Connector	1
18	4380446	Terminal (Alternate Part)	1
19	. . . . .	Connector Assembly (T353) Rear Heated Screen (+)	1
19	1468841	Connector	1
19	4380446	Terminal (Alternate Part)	1
20	. . . . .	Connector Assembly (CPS356) Operator Fan	1
20	1490242	Connector (2 Way)	1
20	1490243	Connector (Secondary Lock)	1
20	1330438	Terminal (Socket)	2
20	4035905	Cap (DT 2-Way)	1
21	. . . . .	Connector Assembly (T377) LH Speaker (+)	1
21	248196	Terminal	1
21	4380445	Terminal (Alternate Part)	1
22	. . . . .	Connector Assembly (T378) LH Speaker (-)	1
22	248196	Terminal	1
22	4380445	Terminal (Alternate Part)	1
23	. . . . .	Connector Assembly (CPP380) Cab Interconnect	1
23	4190277	Connector	1
23	866401	Terminal	4
23	1330437	Terminal (Pin)	12
23	1484377	Plug	7
23	1463138	Terminal (Pin)	6
24	4046441	Clip	2
25	1534282	Clip	5
26	1616345	Strap Clamp	2
27	1500899	Clip	3
28	1498044	Fuse (5 Amp)	2
29	1528132	Fuse (20 Amp)	3
30	1528315	Relay (20 Amp)	1
31	~~4684003~~	Label - 18 Pin PDM	1

See Service Manual for service procedures.
©2026 HYSTER COMPANY

WIRE HARNESS

CAB – UPPER (ALTERNATE PART)

ITEM	PART NO.	DESCRIPTION	QTY
	4717926		
32	1498046	Fuse (10 Amp)	1

©2026 HYSTER COMPANY

WIRE HARNESS (FIGURE 11-81)

CAB — WASHER PUMP JUMPER

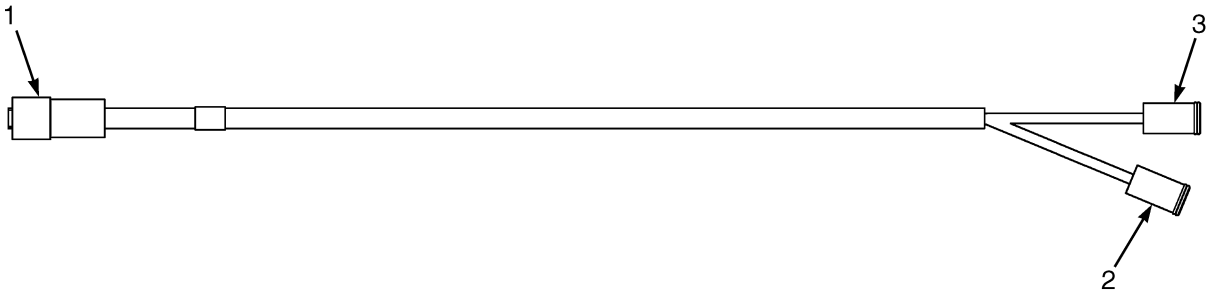

BP083467

ITEM	PART NO.	DESCRIPTION	QTY
	4701870	Wire Harness - Washer Pump Jumper	1
1	. . . . .	Connector Assembly (CRP599) Washer Interconnect	1
1	1489655	Connector (4 Way)	1
1	1330416	Connector (Secondary Lock)	1
1	1330437	Terminal (Pin)	4
2	. . . . .	Connector Assembly (CPS341) Rear Washer	1
2	1490242	Connector (2 Way)	1
2	1490243	Connector (Secondary Lock)	1
2	1330438	Terminal (Socket)	2
3	. . . . .	Connector Assembly (CPS343) Front Washer	1
3	1490242	Connector (2 Way)	1
3	1490243	Connector (Secondary Lock)	1
3	1330438	Terminal (Socket)	2

See Service Manual for service procedures.
©2026 HYSTER COMPANY

NOTES

WIRE HARNESS (FIGURE 11-82)

CHASSIS (BASE OPTION) — POWERSHIFT TRANSMISSION

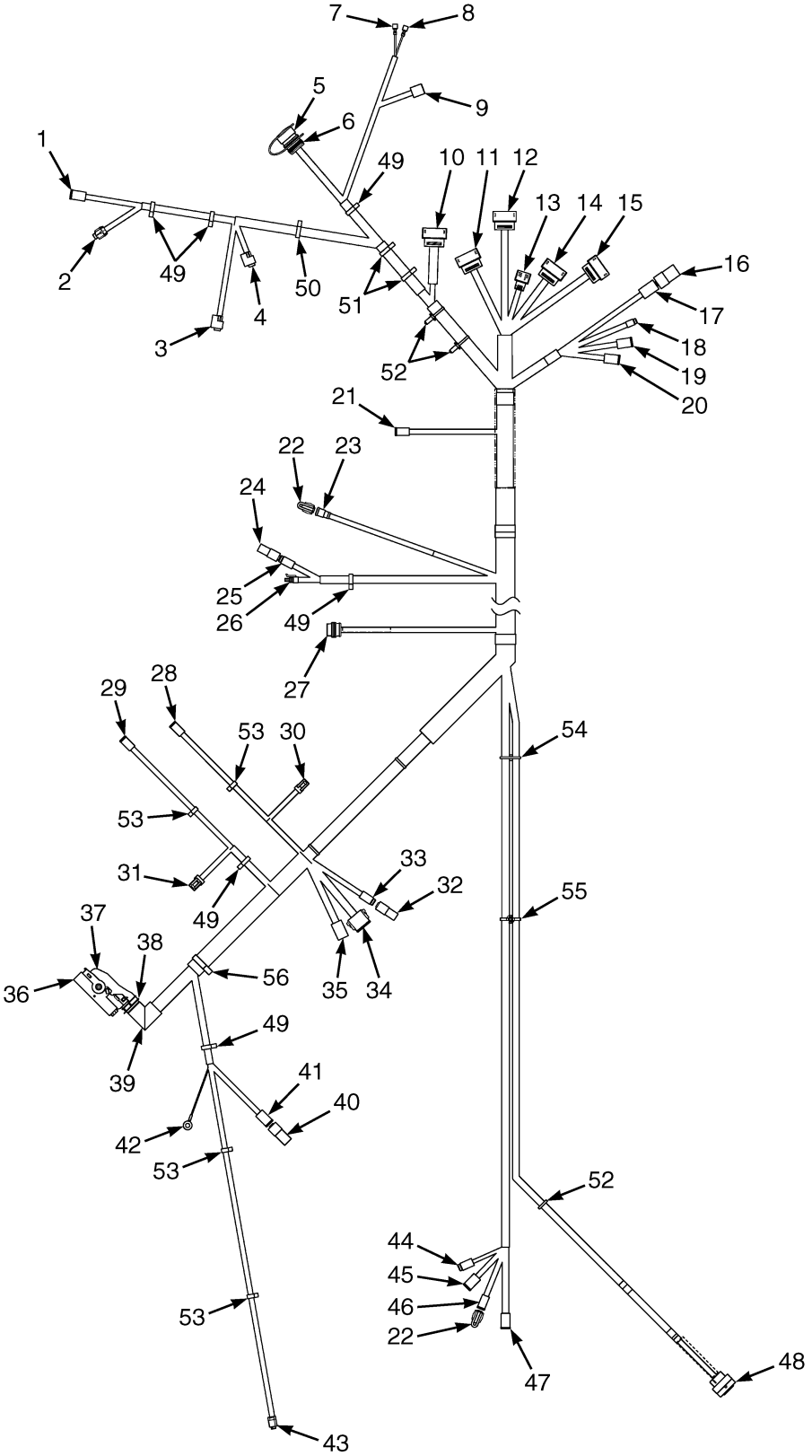

©2026 HYSTER COMPANY

WIRE HARNESS

CHASSIS (BASE OPTION) – POWERSHIFT TRANSMISSION

ITEM	PART NO.	DESCRIPTION	QTY
	4710020	Wire Harness - Chassis, Powershift Transmission (Base Opt)	1
1	. . . . .	Connector Assembly (CPS541) Left Front Work Light Harness	1
1	1489656	Connector (4-Way)	1
1	1489657	Connector (Secondary Lock)	1
1	1330438	Terminal (Socket)	4
2	. . . . .	Connector Assembly (CPS231) Brake Fluid Level Sensor	1
2	. . . . .	Connectors	1
3	. . . . .	Connector Assembly (CPS171) Parking Brake Sensor Position Sensor	1
3	1700460	Connector	1
3	1700461	Terminal	3
4	. . . . .	Connector Assembly (CPS225) Service Brake Pedal Position Sensor	1
4	1700460	Connector	1
4	1700461	Terminal	3
5	4180124	Cap	1
6	. . . . .	Connector Assembly (CPS501) Diagnostic Interface	1
6	4220326	Connector (9-Pin)	1
6	1330437	Terminal (Pin)	7
6	1484377	Plug	2
7	. . . . .	Connector Assembly (T234) Power Port (-)	1
7	1310142	Terminal	1
8	. . . . .	Connector Assembly (T233) Power Port (+)	1
8	1310142	Terminal	1
9	. . . . .	Connector Assembly (CRS230) Work Light Switch	1
9	1484555	Connector Body (10-Way)	1
9	4178577	Terminal	4
10	. . . . .	Connector Assembly (CRS529) Steering Column Harness	1
10	4135138	Connector (MX150, Keying Option A)	1
10	4137207	Terminal (Socket)	15
10	4655881	Plug (Cavity)	5
11	. . . . .	Connector Assembly (CRS4) VSM V4	1
11	4135140	Connector (MX150, Keying Option C)	1
11	4137207	Terminal (Socket)	13
11	4655881	Plug (Cavity)	7
12	. . . . .	Connector Assembly (CRS5) VSM V5	1
12	4135141	Connector (MX150, Keying Option D)	1
12	4137207	Terminal (Socket)	11
12	4655881	Plug (Cavity)	9
13	. . . . .	Connector Assembly (CRS1) VSM V1	1
13	4135136	Connector	1
13	4137207	Terminal (Socket)	6
13	4655880	Terminal (MX150, 14-16 AWG)	2
14	. . . . .	Connector Assembly (CRS2) VSM V2	1
14	4135138	Connector (MX150, Keying Option A)	1
14	4137207	Terminal (Socket)	15
14	4655880	Terminal (MX150, 14-16 AWG)	2
14	4655881	Plug (Cavity)	3
15	. . . . .	Connector Assembly (CRS3) VSM V3	1
15	4135139	Connector (MX150, Keying Option B)	1
15	4137207	Terminal (Socket)	11
15	4655881	Plug (Cavity)	9

©2026 HYSTER COMPANY

WIRE HARNESS

CHASSIS (BASE OPTION) – POWERSHIFT TRANSMISSION

ITEM	PART NO.	DESCRIPTION	QTY
16	. . . . .	Connector Assembly (CRP221) Aux 12V Power Connector #1 Cap	1
16	4047669	Connector (DTP REC 4-Pin)	1
16	1330439	Plug Seal	4
17	. . . . .	Connector Assembly (CPS221) Aux 12V Power Connector #1	1
17	1632865	Connector (DTP PLU 4 Socket)	1
17	1514603	Connector (Secondary Lock)	1
17	1554359	Terminal	4
18	. . . . .	Connector Assembly (CPS521) Display Harness	1
18	1484557	Connector (2 Socket)	1
18	1484558	Connector (Secondary Lock)	1
18	1463139	Terminal	2
19	. . . . .	Connector Assembly (CPS520) Display Harness	1
19	1493430	Connector (6 Way Housing)	1
19	1529052	Connector (Secondary Lock)	1
19	1330438	Terminal (Socket)	4
19	1484377	Plug	2
20	. . . . .	Connector Assembly (CPS540) Right Front Work Light Harness	1
20	1489656	Connector (4-Way)	1
20	1489657	Connector (Secondary Lock)	1
20	1330438	Terminal (Socket)	4
21	. . . . .	Connector Assembly (CPS678) OPS Solenoid	1
21	1490242	Connector (2 Way)	1
21	1490243	Connector (Secondary Lock)	1
21	1330438	Terminal (Socket)	2
22	4035905	Cap (DT 2-Way)	2
23	. . . . .	Connector Assembly (CPS1430) Engine Anti-Stall Solenoid	1
23	4168181	Connector	1
23	1490243	Connector (Secondary Lock)	1
23	1330438	Terminal (Socket)	2
24	. . . . .	Connector Assembly (CRP226) Acc Pedal Direction Select Cap	1
24	~~4170087~~		
	1463184	Connector Housing	1
24	~~4046140~~		
	1463193	Connector	1
24	1484377	Plug	4
25	. . . . .	Connector Assembly (CPS226) Acc Pedal Direction Select	1
25	1463189	Connector	1
25	1463196	Connector (Secondary Lock, DTM PLU 4-Socket)	1
25	1463139	Terminal	4
26	. . . . .	Connector Assembly (CPS227) Acc Pedal Position Sensor	1
26	1525584	Connector	1
26	4223854	Terminal	6
27	. . . . .	Connector Assembly (CPS289) Horn	1
27	1508211	Connector (4 Way)	1
27	1508232	Terminal (Pin)	4
28	. . . . .	Connector Assembly (CPS1415) Proportional Valve (FWD)	1
28	1490242	Connector (2 Way)	1
28	1490243	Connector (Secondary Lock)	1
28	1330438	Terminal (Socket)	2
29	. . . . .	Connector Assembly (CPS1416) Proportional Valve (REV)	1

See Service Manual for service procedures.
©2026 HYSTER COMPANY

WIRE HARNESS

CHASSIS (BASE OPTION) – POWERSHIFT TRANSMISSION

ITEM	PART NO.	DESCRIPTION	QTY
29	1490242	Connector (2 Way)	1
29	1490243	Connector (Secondary Lock)	1
29	1330438	Terminal (Socket)	2
30	. . . . .	Connector Assembly (CPS1400) Transmission Temp Sensor	1
30	1402868	Connector	1
30	4223854	Terminal	2
31	. . . . .	Connector Assembly (CPS1403) TOSS Sensor	1
31	1546673	Connector (TISS)	1
31	4223854	Terminal	3
32	. . . . .	Connector Assembly (CRP587) Backup Alarm Jumper Cap	1
32	~~4170087~~		
	1463184	Connector Housing	1
32	~~4046140~~		
	1463193	Connector	1
32	1484377	Plug	4
33	. . . . .	Connector Assembly (CPS587) Backup Alarm Jumper	1
33	1463189	Connector	1
33	1463196	Connector (Secondary Lock, DTM PLU 4-Socket)	1
33	1463139	Terminal	2
33	1484377	Plug	2
34	. . . . .	Connector Assembly (CPS510) Engine Harness Connector #1	1
34	1493428	Connector (12-Way)	1
34	1500913	Connector (Secondary Lock)	1
34	1330438	Terminal (Socket)	10
34	1484377	Plug	2
35	. . . . .	Connector Assembly (CPS511) Engine Harness Connector #2	1
35	1632865	Connector (DTP PLU 4 Socket)	1
35	1514603	Connector (Secondary Lock)	1
35	1493434	Terminal (Socket)	1
35	1554359	Terminal	3
36	. . . . .	Connector Assembly (CRS52) Main PDM	1
36	4229521	Receptacle Housing	1
36	4177244	Terminal (Socket)	25
36	4229186	Terminal (Socket)	6
36	4229187	Terminal	1
36	1502919	Plug (Junior Timer Blanking Seal)	7
37	4228361	Connector (Backshell)	1
38	137852	Strap Clamp	1
39	4023934	Clip	1
40	4036523	Cap	1
41	. . . . .	Connector Assembly (CPS535) Steer Axle Position Sensor Jumper	1
41	1489656	Connector (4-Way)	1
41	1489657	Connector (Secondary Lock)	1
41	1330438	Terminal (Socket)	4
42	. . . . .	Connector Assembly (T448) Static Ground	1
42	1402620	Ring Terminal	1
43	. . . . .	Connector Assembly (CPS230) Service Brake Pressure Sensor	1
43	1525595	Connector	1
43	1525596	Terminal	3
44	. . . . .	Connector Assembly (CPS544) Rear OHG Harness	1

©2026 HYSTER COMPANY

WIRE HARNESS

CHASSIS (BASE OPTION) – POWERSHIFT TRANSMISSION

ITEM	PART NO.	DESCRIPTION	QTY
44	1531973	Connector	1
44	1531974	Connector (Secondary Lock)	1
44	1463139	Terminal	2
44	1484377	Plug	4
45	. . . . .	Connector Assembly (CPS542) Rear OHG Harness	1
45	1489656	Connector (4-Way)	1
45	1489657	Connector (Secondary Lock)	1
45	1330438	Terminal (Socket)	2
45	1484377	Plug	2
46	. . . . .	Connector Assembly (CPS279) OHG Horn Button	1
46	1490242	Connector (2 Way)	1
46	1490243	Connector (Secondary Lock)	1
46	1330438	Terminal (Socket)	2
47	. . . . .	Connector Assembly (CPS543) Rear OHG Harness	1
47	1330422	Connector (DT PLU 6-Socket)	1
47	1330428	Connector (Secondary Lock)	1
47	1330438	Terminal (Socket)	5
47	1330439	Plug Seal	1
48	. . . . .	Connector Assembly (CPS531) Seat Harness	1
48	4176926	Connector	1
48	1463139	Terminal	6
48	1484377	Plug	14
49	1509890	Clip	6
50	1608857	Clip	1
51	1500899	Clip	2
52	4140361	Cable Clip	5
53	1509888	Clip (Conduit)	1
54	4280606	Retainer (Cable Tie Clip)	1
55	1616343	Strap Clamp	1
56	1540944	Clip	1

See Service Manual for service procedures.
©2026 HYSTER COMPANY

NOTES

WIRE HARNESS (FIGURE 11-83)

CHASSIS (BASE OPTION) — POWERSHIFT TRANSMISSION (ALTERNATE PART)

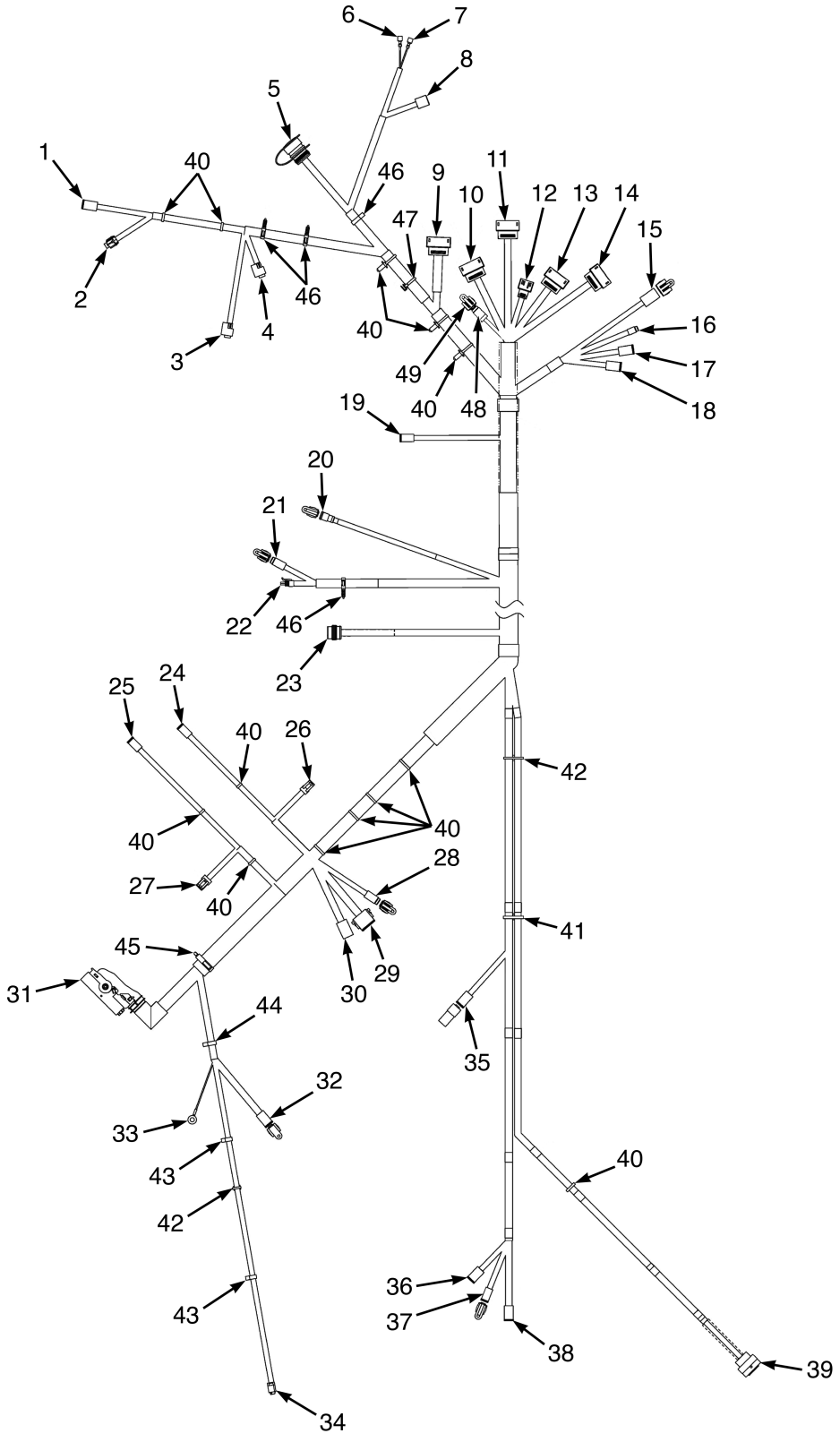

©2026 HYSTER COMPANY

WIRE HARNESS

CHASSIS (BASE OPTION) – POWERSHIFT TRANSMISSION (ALTERNATE PART)

ITEM	PART NO.	DESCRIPTION	QTY
	a 4716883	Wire Harness (Chassis - Powershift Transmission (Base Opt))	1
	b 4723209	Wire Harness (Chassis - Powershift Transmission (Base Opt))	1
1	. . . . .	Connector Assembly (CPS541) Left Front Work Light Harness	1
1	1489656	Connector (4-Way)	1
1	1489657	Connector (Secondary Lock)	1
1	1330438	Terminal (Socket)	4
2	. . . . .	Connector Assembly (CPS231) Brake Fluid Level Sensor	1
2	. . . . .	Connectors	1
2	4707064	Connector Lock	1
2	4701730	Terminal	2
3	. . . . .	Connector Assembly (CPS171) Parking Brake Position Sensor	1
3	1700460	Connector	1
3	1700461	Terminal	3
4	. . . . .	Connector Assembly (CPS225) Service Brake Pedal Position Sensor	1
4	1700460	Connector	1
4	1700461	Terminal	3
5	4338200	Protector (Boot)	1
5	. . . . .	Connector Assembly (CPS501) Diagnostic Interface	1
5	**a** 4220326	Connector (9-Pin)	1
5	**b** 4350103	Connector	1
5	1330437	Terminal (Pin)	7
5	1484377	Plug	2
5	4180124	Cap	1
5	4236767	Dust Cap (Alternate Part)	1
6	. . . . .	Connector Assembly (T234) Power Port (-)	1
6	1310142	Terminal	1
7	. . . . .	Connector Assembly (T233) Power Port (+)	1
7	1310142	Terminal	1
8	. . . . .	Connector Assembly (CRS320) Work Light Switch	1
8	1484555	Connector Body (10-Way)	1
8	4178577	Terminal	4
9	. . . . .	Connector Assembly (CRS529) Steering Column Harness	1
9	4135138	Connector (MX150, Keying Option A)	1
9	4137207	Terminal (Socket)	15
9	4331375	Plug	5
10	. . . . .	Connector Assembly (CRS4) VSM V4	1
10	4135140	Connector (MX150, Keying Option C)	1
10	4137207	Terminal (Socket)	13
10	4331375	Plug	7
11	. . . . .	Connector Assembly (CRS5) VSM V5	1
11	4135141	Connector (MX150, Keying Option D)	1
11	4137207	Terminal (Socket)	11
11	4331375	Plug	9
12	. . . . .	Connector Assembly (CRS1) VSM V1	1
12	4135136	Connector	1
12	4137207	Terminal (Socket)	6
12	4655880	Terminal (MX150, 14-16 AWG)	2
13	. . . . .	Connector Assembly (CRS2) VSM V2	1
13	4135138	Connector (MX150, Keying Option A)	1
13	4137207	Terminal (Socket)	13

©2026 HYSTER COMPANY

WIRE HARNESS

CHASSIS (BASE OPTION) – POWERSHIFT TRANSMISSION (ALTERNATE PART)

ITEM	PART NO.	DESCRIPTION	QTY
13	4655880	Terminal (MX150, 14-16 AWG)	2
13	4331375	Plug	5
14	. . . . .	Connector Assembly (CRS3) VSM V3	1
14	4135139	Connector (MX150, Keying Option B)	1
14	4137207	Terminal (Socket)	11
14	4331375	Plug	9
15	. . . . .	Connector Assembly (CPS221) 12V Aux Power Connector #1	1
15	1632865	Connector (DTP PLU 4 Socket)	1
15	1514603	Connector (Secondary Lock)	1
15	1554359	Terminal	4
15	4312827	Cap	1
16	. . . . .	Connector Assembly (CPS521) Display Harness	1
16	1484557	Connector (2 Socket)	1
16	1484558	Connector (Secondary Lock)	1
16	1463139	Terminal	2
17	. . . . .	Connector Assembly (CPS520) Display Harness	1
17	1493430	Connector (6 Way Housing)	1
17	1529052	Connector (Secondary Lock)	1
17	1330438	Terminal (Socket)	4
17	1484377	Plug	2
18	. . . . .	Connector Assembly (CPS540) Right Front Work Light Harness	1
18	1489656	Connector (4-Way)	1
18	1489657	Connector (Secondary Lock)	1
18	1330438	Terminal (Socket)	4
19	. . . . .	Connector Assembly (CPS678) OPS Solenoid	1
19	1490242	Connector (2 Way)	1
19	1490243	Connector (Secondary Lock)	1
19	1330438	Terminal (Socket)	2
20	. . . . .	Connector Assembly (CPS1430) Engine Anti-Stall Solenoid	1
20	4168181	Connector	1
20	1490243	Connector (Secondary Lock)	1
20	1330438	Terminal (Socket)	2
20	4035905	Cap (DT 2-Way)	1
21	. . . . .	Connector Assembly (CPS226) Acc Pedal Direction Select	1
21	1463189	Connector	1
21	1463196	Connector (Secondary Lock, DTM PLU 4-Socket)	1
21	1463139	Terminal	4
21	4312825	Cap	1
22	. . . . .	Connector Assembly (CPS227) Acc Pedal Position Sensor	1
22	1525584	Connector	1
22	4223854	Terminal	6
23	. . . . .	Connector Assembly (CPS289) Horn	1
23	1508211	Connector (4 Way)	1
23	1508232	Terminal (Pin)	4
23	2060555	Wire Seal (Yellow)	4
24	. . . . .	Connector Assembly (CPS1415) Proportional Valve (FWD)	1
24	1490242	Connector (2 Way)	1
24	1490243	Connector (Secondary Lock)	1
24	1330438	Terminal (Socket)	2
25	. . . . .	Connector Assembly (CPS1416) Proportional Valve (REV)	1

See Service Manual for service procedures.
©2026 HYSTER COMPANY

WIRE HARNESS

CHASSIS (BASE OPTION) – POWERSHIFT TRANSMISSION (ALTERNATE PART)

ITEM	PART NO.	DESCRIPTION	QTY
25	1490242	Connector (2 Way)	1
25	1490243	Connector (Secondary Lock)	1
25	1330438	Terminal (Socket)	2
26	. . . . .	Connector Assembly (CPS1400) Transmission Temp Sensor	1
26	1402868	Connector	1
26	4223854	Terminal	2
27	. . . . .	Connector Assembly (CPS1403) TOSS Sensor	1
27	1546673	Connector (TISS)	1
27	4223854	Terminal	3
28	. . . . .	Connector Assembly (CPS587) Backup Alarm Jumper	1
28	1463189	Connector	1
28	1463196	Connector (Secondary Lock, DTM PLU 4-Socket)	1
28	1463139	Terminal	2
28	1484377	Plug	2
28	4312825	Cap	1
29	. . . . .	Connector Assembly (CPS510) Engine Harness Connector #1	1
29	1493428	Connector (12-Way)	1
29	1500913	Connector (Secondary Lock)	1
29	1330438	Terminal (Socket)	10
29	1484377	Plug	2
30	. . . . .	Connector Assembly (CPS511) Engine Harness Connector #2	1
30	1632865	Connector (DTP PLU 4 Socket)	1
30	1514603	Connector (Secondary Lock)	1
30	1493434	Terminal (Socket)	1
30	1554359	Terminal	3
31	. . . . .	Connector Assembly (CRS52) Main PDM	1
31	4229521	Receptacle Housing	1
31	4177244	Terminal (Socket)	25
31	4229186	Terminal (Socket)	6
31	4229187	Terminal	1
31	1502919	Plug (Junior Timer Blanking Seal)	7
31	1562649	Seal	25
31	1479109	Seal	7
31	4228361	Connector (Backshell)	1
31	137852	Strap Clamp	1
31	4023934	Clip	1
32	. . . . .	Connector Assembly (CPS535) Steer Axle Position Sensor Jumper	1
32	1489656	Connector (4-Way)	1
32	1489657	Connector (Secondary Lock)	1
32	1330438	Terminal (Socket)	4
32	4036523	Cap	1
33	. . . . .	Connector Assembly (T448) Static Ground	1
33	1402620	Ring Terminal	1
34	. . . . .	Connector Assembly (CPS230) Service Brake Pressure Sensor	1
34	1525595	Connector	1
34	1525596	Terminal	3
34	~~1569975~~		
	1533810	Seal (Green)	3
35	. . . . .	Connector Assembly (CPS504) CAN Terminal 4	1
35	1489656	Connector (4-Way)	1

WIRE HARNESS

CHASSIS (BASE OPTION) – POWERSHIFT TRANSMISSION (ALTERNATE PART)

ITEM	PART NO.	DESCRIPTION	QTY
35	1489657	Connector (Secondary Lock)	1
35	1484377	Plug	2
35	1330438	Terminal (Socket)	2
35	1525577	Connector (With Resistor)	1
36	. . . . .	Connector Assembly (CPS542) Rear OHG Harness	1
36	1489656	Connector (4-Way)	1
36	1489657	Connector (Secondary Lock)	1
36	1330438	Terminal (Socket)	2
36	1484377	Plug	2
37	. . . . .	Connector Assembly (CPS279) OHG Horn Button	1
37	1490242	Connector (2 Way)	1
37	1490243	Connector (Secondary Lock)	1
37	1330438	Terminal (Socket)	2
37	4035905	Cap (DT 2-Way)	1
38	. . . . .	Connector Assembly (CPS543) Rear OHG Harness	1
38	1330422	Connector (DT PLU 6-Socket)	1
38	1330428	Connector (Secondary Lock)	1
38	1330438	Terminal (Socket)	5
38	1330439	Plug Seal	1
39	. . . . .	Connector Assembly (CPS531) Seat Harness	1
39	4176926	Connector	1
39	1463139	Terminal	6
39	1484377	Plug	14
40	4140361	Cable Clip	13
41	1616343	Strap Clamp	1
42	4280606	Retainer (Cable Tie Clip)	2
43	1509888	Clip (Conduit)	2
44	1500901	Clip (Conduit)	1
45	1540944	Clip	1
46	1509890	Clip	4
47	4276772	Retainer	1
48	**b**	Connector Assembly (CPS691) To Idle Up Kit	1
48	1493462	Connector (DTM PLU 3-Socket)	1
48	1493464	Connector (Secondary Lock)	1
48	1463139	Terminal	3
49	**b** 4312824	Cap	1

FOOTNOTES:

a → 8/2022

b 8/2022 →

©2026 HYSTER COMPANY

NOTES

WIRE HARNESS (FIGURE 11-84)

CHASSIS (MID OPTION) — POWERSHIFT TRANSMISSION (PAGE 1 OF 2) (→ 3/2021)

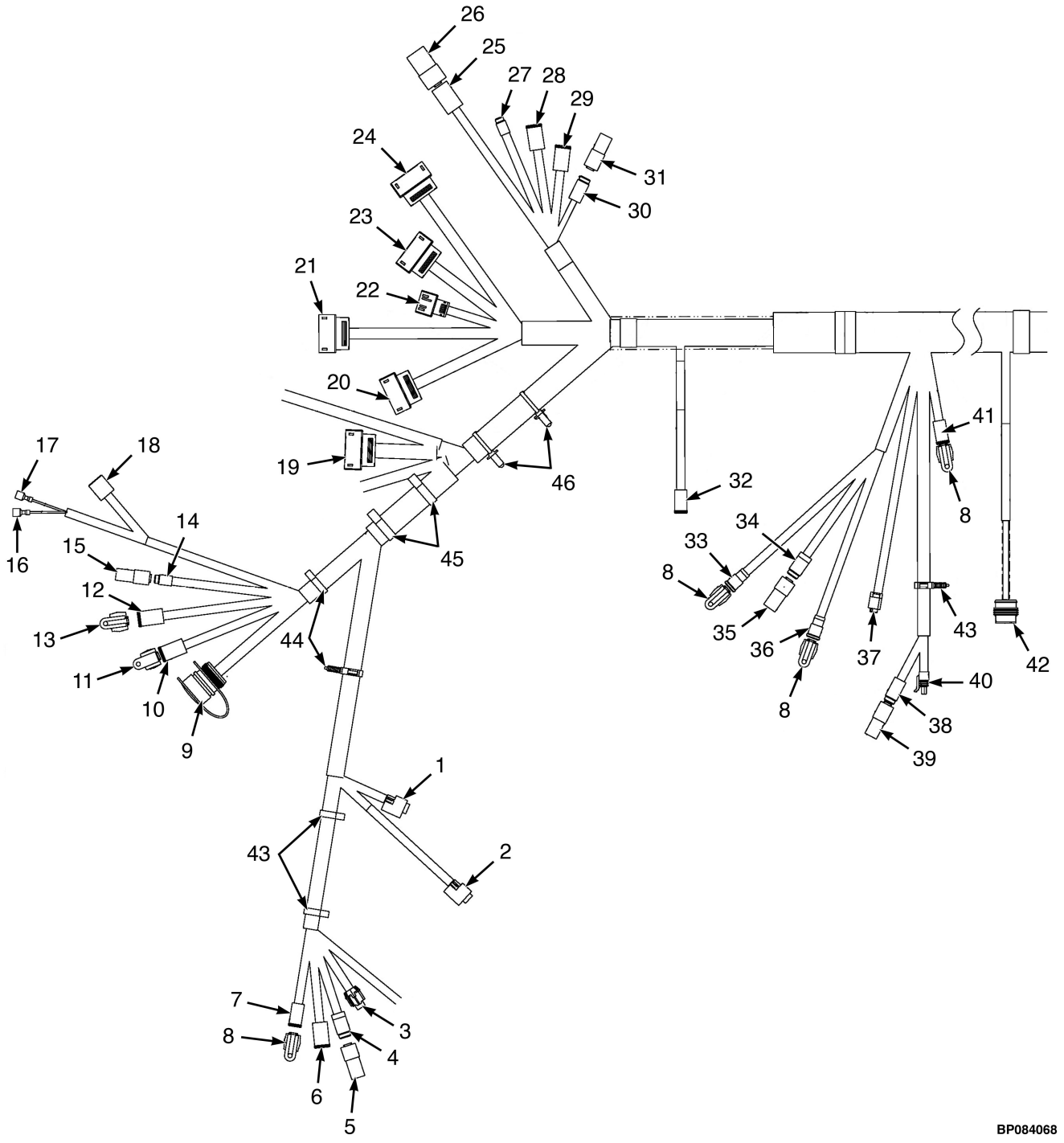

©2026 HYSTER COMPANY

WIRE HARNESS

CHASSIS (MID OPTION) – POWERSHIFT TRANSMISSION (PAGE 1 OF 2) (→ 3/2021)

ITEM	PART NO.	DESCRIPTION	QTY
	4704038	Wire Harness - Chassis, Powershift Transmission (Mid Opt)	1
1	. . . . .	Connector Assembly (CPS225) Service Brake Pedal Position Sensor	1
1	1700460	Connector	1
1	1700461	Terminal	3
2	. . . . .	Connector Assembly (CPS171) Park Brake Position Sensor	1
2	1700460	Connector	1
2	1700461	Terminal	3
3	. . . . .	Connector Assembly (CPS231) Brake Fluid Level Sensor	1
3	. . . . .	Connector	1
3	4707064	Connector Lock	1
3	4701730	Terminal	2
3	. . . . .	Seal	2
4	. . . . .	Connector Assembly (CPS324) Ambient Light Sensor	1
4	1493462	Connector (DTM PLU 3-Socket)	1
4	1493464	Connector (Secondary Lock)	1
4	1463139	Terminal	3
5	. . . . .	Connector Assembly (CRP324) Ambient Light Sensor Cap	1
5	~~4257399~~		
	1463180	Connector (DTM REC 3-Pin)	1
5	~~4257401~~		
	1463191	Connector (Secondary Lock)	1
5	1484377	Plug	3
6	. . . . .	Connector Assembly (CPS541) Left Front Work Light Harness	1
6	1489656	Connector (4-Way)	1
6	1489657	Connector (Secondary Lock)	1
6	1330438	Terminal (Socket)	4
7	. . . . .	Connector Assembly (CPS570) Forward Spot Light Jumper	1
7	1490242	Connector (2 Way)	1
7	1490243	Connector (Secondary Lock)	1
7	1330438	Terminal (Socket)	2
8	4035905	Cap (DT 2-Way)	4
9	. . . . .	Connector Assembly (CPS501) Diagnostic Interface	1
9	4220326	Connector (9-Pin)	1
9	1330437	Terminal (Pin)	7
9	1484377	Plug	2
9	4180124	Cap	1
10	. . . . .	Connector Assembly (CPS590) CAN Switch	1
10	1489656	Connector (4-Way)	1
10	1489657	Connector (Secondary Lock)	1
10	1330438	Terminal (Socket)	4
11	4036523	Cap	1
12	. . . . .	Connector Assembly (CPS589) CAN Switch	1
12	1493430	Connector (6 Way Housing)	1
12	1529052	Connector (Secondary Lock)	1
12	1330438	Terminal (Socket)	4
12	1484377	Plug	2
13	4036873	Cap (6 Way)	1
14	. . . . .	Connector Assembly (CPS655) RTST Override Button	1
14	1484557	Connector (2 Socket)	1
14	1484558	Connector (Secondary Lock)	1

WIRE HARNESS

CHASSIS (MID OPTION) – POWERSHIFT TRANSMISSION (PAGE 1 OF 2) (→ 3/2021)

ITEM	PART NO.	DESCRIPTION	QTY
14	1463139	Terminal	2
15	. . . . .	Connector Assembly (CRP655) RTST Override Button Cap	1
15	1561559	Connector (2 Pin)	1
15	1561755	Connector (Secondary Lock)	1
15	1484377	Plug	2
16	. . . . .	Connector Assembly (T234) Power Port (-)	1
16	1310142	Terminal	1
17	. . . . .	Connector Assembly (T233) Power Port (+)	1
17	1310142	Terminal	1
18	. . . . .	Connector Assembly (CPS232) USB Port	1
18	1484555	Connector Body (10-Way)	1
18	4178577	Terminal	2
19	. . . . .	Connector Assembly (CRS529) Column Harness	1
19	4135138	Connector (MX150, Keying Option A)	1
19	4137207	Terminal (Socket)	16
19	4655881	Plug (Cavity)	4
20	. . . . .	Connector Assembly (CRS4) VSM V4	1
20	4135140	Connector (MX150, Keying Option C)	1
20	4137207	Terminal (Socket)	18
20	4655881	Plug (Cavity)	2
21	. . . . .	Connector Assembly (CRS5) VSM V5	1
21	4135141	Connector (MX150, Keying Option D)	1
21	4137207	Terminal (Socket)	16
21	4655881	Plug (Cavity)	4
22	. . . . .	Connector Assembly (CRS1) VSM V1	1
22	4135136	Connector	1
22	4137207	Terminal (Socket)	6
22	4655880	Terminal (MX150, 14-16 AWG)	2
23	. . . . .	Connector Assembly (CRS2) VSM V2	1
23	4135138	Connector (MX150, Keying Option A)	1
23	4137207	Terminal (Socket)	18
23	4655880	Terminal (MX150, 14-16 AWG)	2
24	. . . . .	Connector Assembly (CRS3) VSM V3	1
24	4135139	Connector (MX150, Keying Option B)	1
24	4137207	Terminal (Socket)	16
24	4655881	Plug (Cavity)	4
25	. . . . .	Connector Assembly (CPS221) Aux 12V Power Connector #1	1
25	1632865	Connector (DTP PLU 4 Socket)	1
25	1514603	Connector (Secondary Lock)	1
25	1554359	Terminal	4
26	. . . . .	Connector Assembly (CRP221) Aux 12V Cap Connector #1	1
26	4047669	Connector (DTP REC 4-Pin)	1
26	1514598	Connector (Secondary Lock)	1
26	1330439	Plug Seal	4
27	. . . . .	Connector Assembly (CPS521) Display Harness	1
27	1484557	Connector (2 Socket)	1
27	1484558	Connector (Secondary Lock)	1
27	1463139	Terminal	2
28	. . . . .	Connector Assembly (CPS520) Display Harness	1
28	1330438	Terminal (Socket)	6

©2026 HYSTER COMPANY

WIRE HARNESS

CHASSIS (MID OPTION) – POWERSHIFT TRANSMISSION (PAGE 1 OF 2) (→ 3/2021)

ITEM	PART NO.	DESCRIPTION	QTY
28	1529052	Connector (Secondary Lock)	1
28	1493430	Connector (6 Way Housing)	1
29	. . . . .	Connector Assembly (CPS540) Right Front Work Light Harness	1
29	1489656	Connector (4-Way)	1
29	1489657	Connector (Secondary Lock)	1
29	1330438	Terminal (Socket)	4
30	. . . . .	Connector Assembly (CPS575) To Card Reader Jumper	1
30	1463189	Connector	1
30	1463196	Connector (Secondary Lock, DTM PLU 4-Socket)	1
30	1463139	Terminal	3
30	1484377	Plug	1
31	. . . . .	Connector Assembly (CRP575) Card Reader Jumper Cap	1
31	~~4170087~~		
	1463184	Connector Housing	1
31	~~4046140~~		
	1463193	Connector	1
31	1484377	Plug	4
32	. . . . .	Connector Assembly (CPS678) OPS Solenoid	1
32	1490242	Connector (2 Way)	1
32	1490243	Connector (Secondary Lock)	1
32	1330438	Terminal (Socket)	2
33	. . . . .	Connector Assembly (CPS1430) Engine Anti-Stall Solenoid	1
33	4168181	Connector	1
33	1490243	Connector (Secondary Lock)	1
33	1330438	Terminal (Socket)	2
34	. . . . .	Connector Assembly (CPS656) Tilt Spool Position	1
34	1493462	Connector (DTM PLU 3-Socket)	1
34	1493464	Connector (Secondary Lock)	1
34	1463139	Terminal	3
35	. . . . .	Connector Assembly (CRP656) Tilt Spool Position Cap	1
35	~~4257399~~		
	1463180	Connector (DTM REC 3-Pin)	1
35	~~4257401~~		
	1463191	Connector (Secondary Lock)	1
35	1484377	Plug	3
36	. . . . .	Connector Assembly (CPS654) Proportional Valve (Tilt)	1
36	4168181	Connector	1
36	1490243	Connector (Secondary Lock)	1
36	1330438	Terminal (Socket)	2
37	. . . . .	Connector Assembly (CPS637) Load Weigh Sensor	1
37	1525595	Connector	1
37	1525596	Terminal	3
37	~~1569975~~		
	1533810	Seal (Green)	3
38	. . . . .	Connector Assembly (CPS226) Accelerator Pedal Direction Selector	1
38	1463189	Connector	1
38	1463196	Connector (Secondary Lock, DTM PLU 4-Socket)	1
38	1463139	Terminal	4
39	. . . . .	Connector Assembly (CRP226) Direction Selector Cap	1
39	~~4170087~~	Connector Housing	1

WIRE HARNESS

CHASSIS (MID OPTION) – POWERSHIFT TRANSMISSION (PAGE 1 OF 2) (→ 3/2021)

ITEM	PART NO.	DESCRIPTION	QTY
	1463184		
39	~~4046140~~		
	1463193	Connector	1
39	1484377	Plug	4
40	. . . . .	Connector Assembly (CPS227) Accelerator Pedal Position Sensor	1
40	1525584	Connector	1
40	4223854	Terminal	6
41	. . . . .	Connector Assembly (CPS528) Hyd/VDP Temp Sensor Jumper	1
41	1490242	Connector (2 Way)	1
41	1490243	Connector (Secondary Lock)	1
41	1330438	Terminal (Socket)	2
42	. . . . .	Connector Assembly (CPS289) Horn	1
42	1508211	Connector (4 Way)	1
42	1508232	Terminal (Pin)	4
42	2060555	Wire Seal (Yellow)	4
43	1509890	Clip	3
44	1608857	Clip	2
45	1534282	Clip	2
46	4140361	Cable Clip	2

See Service Manual for service procedures.
©2026 HYSTER COMPANY

NOTES

WIRE HARNESS (FIGURE 11-85)

CHASSIS (MID OPTION) — POWERSHIFT TRANSMISSION (PAGE 2 OF 2) (→ 3/2021)

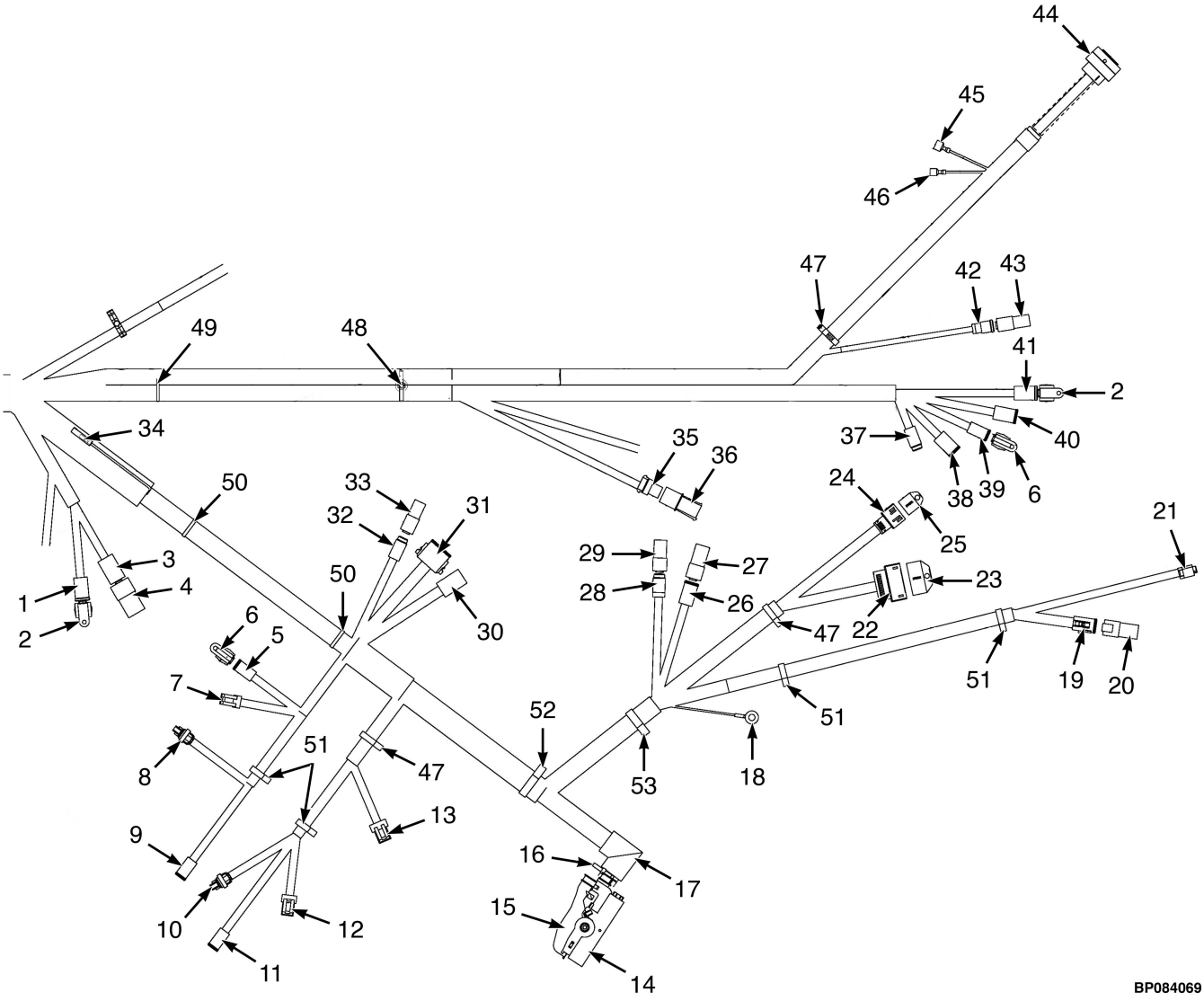

©2026 HYSTER COMPANY

WIRE HARNESS

CHASSIS (MID OPTION) – POWERSHIFT TRANSMISSION (PAGE 2 OF 2) (→ 3/2021)

ITEM	PART NO.	DESCRIPTION	QTY
	4704038	Wire Harness - Chassis, Powershift Transmission (Mid Opt)	1
1	. . . . .	Connector Assembly (CPS502) Impact Sensor	1
1	4167341	Connector	1
1	1489657	Connector (Secondary Lock)	1
1	1330438	Terminal (Socket)	4
2	4036523	Cap	2
3	. . . . .	Connector Assembly (CPS220) Aux 12V Power Connector #2	1
3	1632865	Connector (DTP PLU 4 Socket)	1
3	1514603	Connector (Secondary Lock)	1
3	1554359	Terminal	4
4	. . . . .	Connector Assembly (CRP220) Aux 12V Cap Connector #2	1
4	4047669	Connector (DTP REC 4-Pin)	1
4	1514598	Connector (Secondary Lock)	1
4	1330439	Plug Seal	4
5	. . . . .	Connector Assembly (CPS1419) Transmission Enable Valve	1
5	1490242	Connector (2 Way)	1
5	1490243	Connector (Secondary Lock)	1
5	1330438	Terminal (Socket)	2
6	4035905	Cap (DT 2-Way)	2
7	. . . . .	Connector Assembly (CPS1400) Transmission Temp Sensor	1
7	1402868	Connector	1
7	4223854	Terminal	2
8	. . . . .	Connector Assembly (CRP1410) Forward Pressure Sensor	1
8	1603021	Connector	1
8	1603236	Connector (Secondary Lock)	1
8	4223853	Terminal	3
8	1548519	Seal	3
9	. . . . .	Connector Assembly (CPS1415) Proportional Valve (FWD)	1
9	1490242	Connector (2 Way)	1
9	1490243	Connector (Secondary Lock)	1
9	1330438	Terminal (Socket)	2
10	. . . . .	Connector Assembly (CRP1411) Reverse Pressure Sensor	1
10	1603021	Connector	1
10	1603236	Connector (Secondary Lock)	1
10	4223853	Terminal	3
10	1548519	Seal	3
11	. . . . .	Connector Assembly (CPS1416) Proportional Valve (REV)	1
11	1490242	Connector (2 Way)	1
11	1490243	Connector (Secondary Lock)	1
11	1330438	Terminal (Socket)	2
12	. . . . .	Connector Assembly (CPS1401) TISS Sensor	1
12	1546673	Connector (TISS)	1
12	4223854	Terminal	3
13	. . . . .	Connector Assembly (CPS1402) TOSS Sensor	1
13	1558156	Connector	1
13	4223854	Terminal	4
14	. . . . .	Connector Assembly (CRS52) Main PDM	1
14	4229521	Receptacle Housing	1
14	4177244	Terminal (Socket)	26
14	4229186	Terminal (Socket)	6

©2026 HYSTER COMPANY

WIRE HARNESS

CHASSIS (MID OPTION) – POWERSHIFT TRANSMISSION (PAGE 2 OF 2) (→ 3/2021)

ITEM	PART NO.	DESCRIPTION	QTY
14	1502919	Plug (Junior Timer Blanking Seal)	6
14	4229187	Terminal	1
14	1562649	Seal	26
14	1479109	Seal	7
15	4228361	Connector (Backshell)	1
16	137852	Strap Clamp	1
17	4023934	Clip	1
18	. . . . .	Connector Assembly (T448) Static Ground	1
18	1402620	Ring Terminal	1
19	. . . . .	Connector Assembly (CPS530) Mast Jumper Harness	1
19	1493428	Connector (12-Way)	1
19	1500913	Connector (Secondary Lock)	1
19	1330438	Terminal (Socket)	8
19	1484377	Plug	4
20	. . . . .	Connector Assembly (CRP530) Mast Jumper Cap	1
20	1531746	Electrical Connector	1
21	. . . . .	Connector Assembly (CPS230) Service Brake Pressure Sensor	1
21	1525595	Connector	1
21	1525596	Terminal	3
21	~~1569975~~		
	1533810	Seal (Green)	3
22	. . . . .	Connector Assembly (CRS12) iBox1 I2 (☞Figure 11-22, ☞Figure 11-21)	1
22	4135138	Connector (MX150, Keying Option A)	1
22	4137207	Terminal (Socket)	12
22	4655881	Plug (Cavity)	7
22	4655880	Terminal (MX150, 14-16 AWG)	1
23	4700067	Cap	1
24	. . . . .	Connector Assembly (CRS11) iBox1 I1 (☞Figure 11-22, ☞Figure 11-21)	1
24	4135137	Connector	1
24	4137207	Terminal (Socket)	5
24	4655880	Terminal (MX150, 14-16 AWG)	2
24	4655881	Plug (Cavity)	1
25	4700066	Cap	1
26	. . . . .	Connector Assembly (CPS535) Steer Axle Position Sensor Jumper	1
26	1489656	Connector (4-Way)	1
26	1489657	Connector (Secondary Lock)	1
26	1330438	Terminal (Socket)	4
27	. . . . .	Connector Assembly (CRP535) Steer Axle Position Cap	1
27	1489655	Connector (4 Way)	1
27	1330416	Connector (Secondary Lock)	1
27	1484377	Plug	4
28	. . . . .	Connector Assembly (CPS582) LPG Tank Bracket Jumper	1
28	1493462	Connector (DTM PLU 3-Socket)	1
28	1493464	Connector (Secondary Lock)	1
28	1463139	Terminal	3
29	. . . . .	Connector Assembly (CRP582) LPG Tank Bracket Cap	1
29	1493462	Connector (DTM PLU 3-Socket)	1
29	1493464	Connector (Secondary Lock)	1
29	1463139	Terminal	3
30	. . . . .	Connector Assembly (CPS511) Engine Harness Connector #2	1

©2026 HYSTER COMPANY

WIRE HARNESS

CHASSIS (MID OPTION) – POWERSHIFT TRANSMISSION (PAGE 2 OF 2) (→ 3/2021)

ITEM	PART NO.	DESCRIPTION	QTY
30	1632865	Connector (DTP PLU 4 Socket)	1
30	1514603	Connector (Secondary Lock)	1
30	1493434	Terminal (Socket)	1
30	1554359	Terminal	3
31	. . . . .	Connector Assembly (CPS510) Engine Harness Connector #1	1
31	1493428	Connector (12-Way)	1
31	1500913	Connector (Secondary Lock)	1
31	1330438	Terminal (Socket)	10
31	1484377	Plug	2
32	. . . . .	Connector Assembly (CPS587) Backup Alarm Jumper	1
32	1463189	Connector	1
32	1463196	Connector (Secondary Lock, DTM PLU 4-Socket)	1
32	1463139	Terminal	4
33	. . . . .	Connector Assembly (CRP587) Backup Jumper Cap	1
33	~~4170087~~		
	1463184	Connector Housing	1
33	~~4046140~~		
	1463193	Connector	1
33	1484377	Plug	4
34	. . . . .	Connector Assembly (T358) Heater	1
34	1324310	Terminal	1
34	1324309	Sleeve	1
35	. . . . .	Connector Assembly (CPS671) Hydraulic Filter Switch	1
35	1329152	Plug	1
35	1329151	Secondary Lock	1
35	1330281	Terminal	2
35	1402888	Seal (Purple)	2
36	. . . . .	Connector Assembly (CRP671) Hydraulic Filter Cap	1
36	1329150	Connector	1
36	1329151	Secondary Lock	1
36	1327164	Terminator	2
37	. . . . .	Connector Assembly (CPS544) Rear OHG Harness	1
37	1531973	Connector	1
37	1531974	Connector (Secondary Lock)	1
37	1463139	Terminal	5
37	1484377	Plug	1
38	. . . . .	Connector Assembly (CPS542) Rear OHG Harness	1
38	1489656	Connector (4-Way)	1
38	1489657	Connector (Secondary Lock)	1
38	1330438	Terminal (Socket)	4
39	. . . . .	Connector Assembly (CPS279) OHG Horn Button	1
39	1490242	Connector (2 Way)	1
39	1490243	Connector (Secondary Lock)	1
39	1330438	Terminal (Socket)	2
40	. . . . .	Connector Assembly (CPS543) Rear OHG Harness	1
40	1330422	Connector (DT PLU 6-Socket)	1
40	1330428	Connector (Secondary Lock)	1
40	1330438	Terminal (Socket)	5
40	1330439	Plug Seal	1
41	. . . . .	Connector Assembly (CPS571) Pedestrian Awareness Light Jumper	1

©2026 HYSTER COMPANY

WIRE HARNESS

CHASSIS (MID OPTION) – POWERSHIFT TRANSMISSION (PAGE 2 OF 2) (→ 3/2021)

ITEM	PART NO.	DESCRIPTION	QTY
41	4167341	Connector	1
41	1489657	Connector (Secondary Lock)	1
41	1330438	Terminal (Socket)	4
42	. . . . .	Connector Assembly (CPS403) Remote Keyswitch	1
42	4168181	Connector	1
42	1490243	Connector (Secondary Lock)	1
42	1330438	Terminal (Socket)	2
43	. . . . .	Connector Assembly (CRP403) Remote Keyswitch Jumper	1
43	1493465	Connector (2 Pin)	1
43	1330414	Connector (Secondary Lock)	1
43	1330437	Terminal (Pin)	2
44	. . . . .	Connector Assembly (CPS531) Seat Harness	1
44	4176926	Connector	1
44	1463139	Terminal	15
44	1330438	Terminal (Socket)	2
44	1484377	Plug	3
45	. . . . .	Connector Assembly (TM551) Seat Compressor Power (-)	1
45	1310143	Terminal (Male)	1
46	. . . . .	Connector Assembly (TF550) Seat Compressor Power (+)	1
46	1310142	Terminal	1
47	1608857	Clip	3
48	1616343	Strap Clamp	1
49	4280606	Retainer (Cable Tie Clip)	1
50	4140361	Cable Clip	2
51	1509890	Clip	4
52	1540944	Clip	1
53	1509889	Clip	1

©2026 HYSTER COMPANY

NOTES

WIRE HARNESS (FIGURE 11-86)

CHASSIS (MID AND FULL OPTION) — POWERSHIFT TRANSMISSION (PAGE 1 OF 2) (3/2021 ↔ 9/2021)

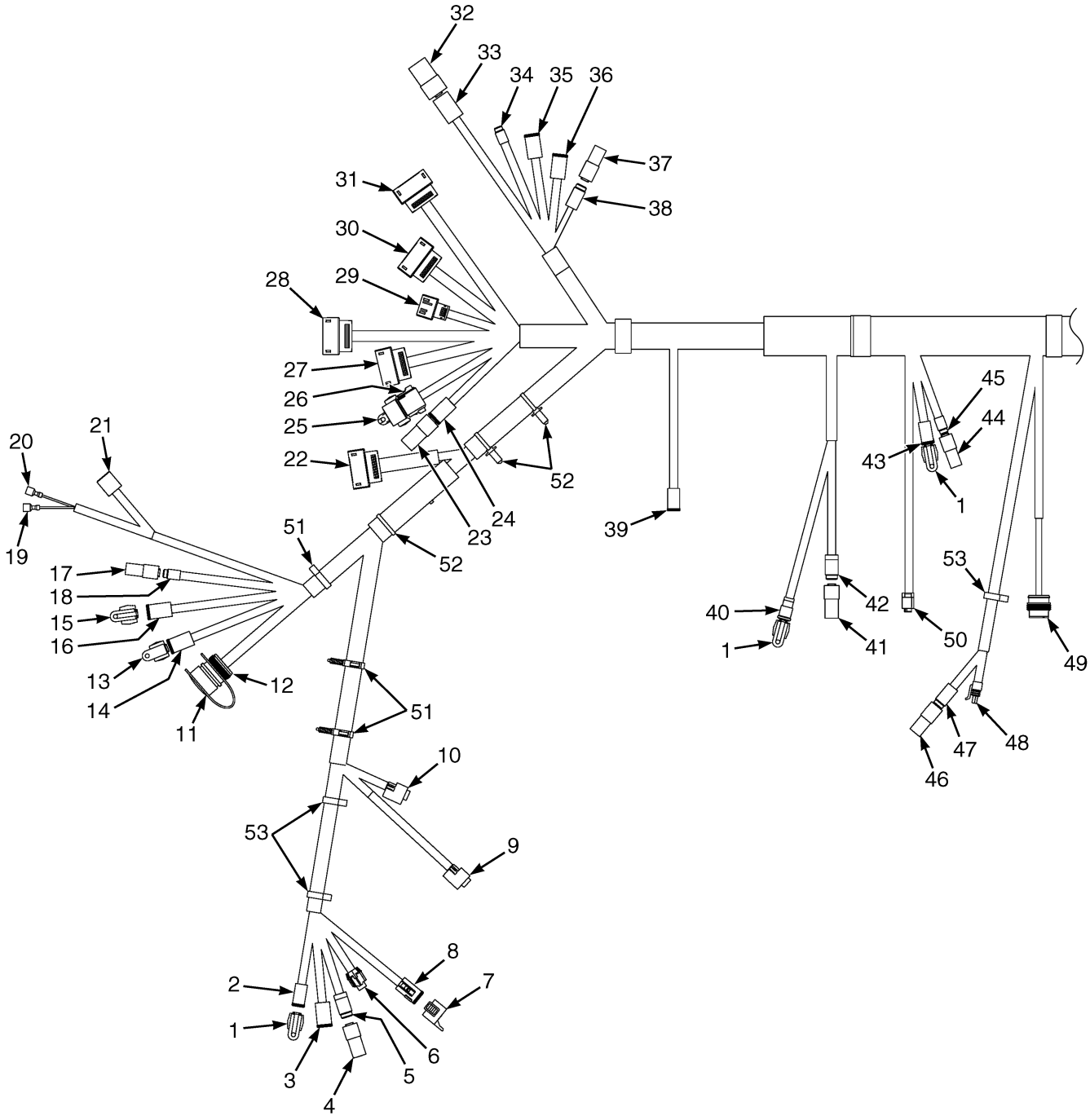

©2026 HYSTER COMPANY

WIRE HARNESS

CHASSIS (MID AND FULL OPTION) – POWERSHIFT TRANSMISSION (PAGE 1 OF 2) (3/2021 ↔ 9/2021)

ITEM	PART NO.	DESCRIPTION	QTY
	4710001	Wire Harness - Chassis, Powershift Transmission (Full Opt)	1
	4710000	Wire Harness - Chassis, Powershift Transmission (Mid Opt)	1
1	4035905	Cap (DT 2-Way)	3
2	. . . . .	Connector Assembly (CPS570) Forward Spot Light Jumper	1
2	1490242	Connector (2 Way)	1
2	1490243	Connector (Secondary Lock)	1
2	1330438	Terminal (Socket)	2
3	. . . . .	Connector Assembly (CPS541) Left Front Work Light Harness	1
3	1489656	Connector (4-Way)	1
3	1489657	Connector (Secondary Lock)	1
3	1330438	Terminal (Socket)	4
4	. . . . .	Connector Assembly (CRP324) Ambient Light Sensor Cap	1
4	~~4257399~~		
	1463180	Connector (DTM REC 3-Pin)	1
4	1484377	Plug	3
5	. . . . .	Connector Assembly (CPS324) Ambient Light Sensor	1
5	1493462	Connector (DTM PLU 3-Socket)	1
5	1493464	Connector (Secondary Lock)	1
5	1463139	Terminal	3
6	. . . . .	Connector Assembly (CPS231) Brake Fluid Level Sensor	1
6	. . . . .	Connector	1
6	4707064	Connector Lock	1
6	4701730	Terminal	2
7	**a** 4044070	Cap	1
8	. . . . .	Connector Assembly (CPS574) WBA Parking Brake Jumper	1
8	1525580	Connector	1
8	1502626	Connector (Secondary Lock)	1
8	1330438	Terminal (Socket)	8
9	. . . . .	Connector Assembly (CRS171) Parking Brake Position Sensor	1
9	1700460	Connector	1
9	1700461	Terminal	3
10	. . . . .	Connector Assembly (CPS225) Service Brake Pedal Position Sensor	1
10	1700460	Connector	1
10	1700461	Terminal	3
11	4180124	Cap	1
12	. . . . .	Connector Assembly (CPS501) Diagnostic Interface	1
12	4220326	Connector (9-Pin)	1
12	1330437	Terminal (Pin)	7
12	1484377	Plug	2
13	4036523	Cap	2
14	. . . . .	Connector Assembly (CPS590) CAN Switch	1
14	1489656	Connector (4-Way)	1
14	1489657	Connector (Secondary Lock)	1
14	1330438	Terminal (Socket)	4
15	4036873	Cap (6 Way)	2
16	. . . . .	Connector Assembly (CPS589) CAN Switch	1
16	1493430	Connector (6 Way Housing)	1
16	1529052	Connector (Secondary Lock)	1
16	1330438	Terminal (Socket)	4
16	1484377	Plug	2

©2026 HYSTER COMPANY

WIRE HARNESS

CHASSIS (MID AND FULL OPTION) – POWERSHIFT TRANSMISSION (PAGE 1 OF 2) (3/2021 ↔ 9/2021)

ITEM	PART NO.	DESCRIPTION	QTY
17	. . . . .	Connector Assembly (CRP655) RTST Override Button Cap	1
17	1561559	Connector (2 Pin)	1
17	1561755	Connector (Secondary Lock)	1
17	1484377	Plug	2
18	. . . . .	Connector Assembly (CPS655) RTST Override Button	1
18	1484557	Connector (2 Socket)	1
18	1484558	Connector (Secondary Lock)	1
18	1463139	Terminal	2
19	. . . . .	Connector Assembly (T234) Power Port (-)	1
19	1310142	Terminal	1
20	. . . . .	Connector Assembly (T233) Power Port (+)	1
20	1310142	Terminal	1
21	. . . . .	Connector Assembly (CPS232) USB Port	1
21	1484555	Connector Body (10-Way)	1
21	4178577	Terminal	2
22	. . . . .	Connector Assembly (CRS529) Column Harness	1
22	4135138	Connector (MX150, Keying Option A)	1
22	4137207	Terminal (Socket)	16
22	4655881	Plug (Cavity)	4
23	. . . . .	Connector Assembly (CRP397) Cab Jumper Cap	1
23	4176400	Connector	1
23	1330418	Connector (Receptacle, 8-Pin)	1
23	1330437	Terminal (Pin)	8
24	. . . . .	Connector Assembly (CPS397) Cab Harness	1
24	4176574	Connector	1
24	1502626	Connector (Secondary Lock)	1
24	1330438	Terminal (Socket)	8
25	4044070	Cap	1
26	. . . . .	Connector Assembly (CPS534) E-Hyd Harness	1
26	4176575	Connector	1
26	1502626	Connector (Secondary Lock)	1
26	1330438	Terminal (Socket)	6
26	1484377	Plug	2
27	. . . . .	Connector Assembly (CRS4) VSM V4	1
27	4135140	Connector (MX150, Keying Option C)	1
27	4137207	Terminal (Socket)	18
27	4655881	Plug (Cavity)	2
28	. . . . .	Connector Assembly (CRS5) VSM V5	1
28	4135141	Connector (MX150, Keying Option D)	1
28	4137207	Terminal (Socket)	16
28	4655881	Plug (Cavity)	4
29	. . . . .	Connector Assembly (CRS1) VSM V1	1
29	4135136	Connector	1
29	4137207	Terminal (Socket)	6
29	4655880	Terminal (MX150, 14-16 AWG)	2
30	. . . . .	Connector Assembly (CRS2) VSM V2	1
30	4135138	Connector (MX150, Keying Option A)	1
30	4137207	Terminal (Socket)	18
30	4655880	Terminal (MX150, 14-16 AWG)	2
31	. . . . .	Connector Assembly (CRS3) VSM V3	1

See Service Manual for service procedures.
©2026 HYSTER COMPANY

WIRE HARNESS

CHASSIS (MID AND FULL OPTION) – POWERSHIFT TRANSMISSION (PAGE 1 OF 2) (3/2021 ↔ 9/2021)

ITEM	PART NO.	DESCRIPTION	QTY
31	4135139	Connector (MX150, Keying Option B)	1
31	4137207	Terminal (Socket)	16
31	4655881	Plug (Cavity)	4
32	. . . . .	Connector Assembly (CRP221) Aux 12V Power Connector #1 Cap	1
32	4047669	Connector (DTP REC 4-Pin)	1
32	1330439	Plug Seal	4
33	. . . . .	Connector Assembly (CPS221) Aux 12V Power Connector #1	1
33	1632865	Connector (DTP PLU 4 Socket)	1
33	1514603	Connector (Secondary Lock)	1
33	1554359	Terminal	4
34	. . . . .	Connector Assembly (CPS521) Display Harness	1
34	1484557	Connector (2 Socket)	1
34	1484558	Connector (Secondary Lock)	1
34	1463139	Terminal	2
35	. . . . .	Connector Assembly (CPS520) Display Harness	1
35	1493430	Connector (6 Way Housing)	1
35	1529052	Connector (Secondary Lock)	1
35	1330438	Terminal (Socket)	6
36	. . . . .	Connector Assembly (CPS540) Right Front Work Light Harness	1
36	1489656	Connector (4-Way)	1
36	1489657	Connector (Secondary Lock)	1
36	1330438	Terminal (Socket)	4
37	. . . . .	Connector Assembly (CRP575) To Card Reader Jumper Cap	1
37	~~4170087~~		
	1463184	Connector Housing	1
37	~~4046140~~		
	1463193	Connector	1
37	1484377	Plug	4
38	. . . . .	Connector Assembly (CPS575) To Card Reader Jumper	1
38	1463189	Connector	1
38	1463196	Connector (Secondary Lock, DTM PLU 4-Socket)	1
38	1463139	Terminal	3
38	1484377	Plug	1
39	. . . . .	Connector Assembly (CPS678) OPS Solenoid	1
39	1490242	Connector (2 Way)	1
39	1490243	Connector (Secondary Lock)	1
39	1330438	Terminal (Socket)	2
40	. . . . .	Connector Assembly (CPS1430) Engine Anti-Stall Solenoid	1
40	4168181	Connector	1
40	1490243	Connector (Secondary Lock)	1
40	1330438	Terminal (Socket)	2
41	. . . . .	Connector Assembly (CRP656) Tilt Spool Position Cap	1
41	~~4257399~~		
	1463180	Connector (DTM REC 3-Pin)	1
41	~~4257401~~		
	1463191	Connector (Secondary Lock)	1
42	. . . . .	Connector Assembly (CPS656) Tilt Spool Position	1
42	1493462	Connector (DTM PLU 3-Socket)	1
42	1493464	Connector (Secondary Lock)	1
42	1463139	Terminal	3

WIRE HARNESS

CHASSIS (MID AND FULL OPTION) – POWERSHIFT TRANSMISSION (PAGE 1 OF 2) (3/2021 ↔ 9/2021)

ITEM	PART NO.	DESCRIPTION	QTY
43	. . . . .	Connector Assembly (CPS528) Hyd/VDP Temp Sensor Jumper	1
43	1490242	Connector (2 Way)	1
43	1490243	Connector (Secondary Lock)	1
43	1330438	Terminal (Socket)	2
43	1509890	Clip	3
44	. . . . .	Connector Assembly (CRP561) Tilt Proportion Valve Jumper Cap	1
44	1561559	Connector (2 Pin)	1
44	1561755	Connector (Secondary Lock)	1
44	1484377	Plug	2
45	. . . . .	Connector Assembly (CPS561) Tilt Proportion Valve Jumper	1
45	1484557	Connector (2 Socket)	1
45	1484558	Connector (Secondary Lock)	1
45	1463139	Terminal	2
46	. . . . .	Connector Assembly (CRP226) Acc Pedal Direction Select Cap	1
46	~~4170087~~		
	1463184	Connector Housing	1
46	~~4046140~~		
	1463193	Connector	1
46	1484377	Plug	4
47	. . . . .	Connector Assembly (CPS226) Acc Pedal Direction Select	1
47	1463189	Connector	1
47	1463196	Connector (Secondary Lock, DTM PLU 4-Socket)	1
47	1463139	Terminal	4
48	. . . . .	Connector Assembly (CPS227) Acc Pedal Position Sensor	1
48	1525584	Connector	1
48	4223854	Terminal	6
49	. . . . .	Connector Assembly (CPS289) Horn	1
49	1508211	Connector (4 Way)	1
49	1508232	Terminal (Pin)	4
50	. . . . .	Connector Assembly (CPS637) Load Weigh Sensor	1
50	1525595	Connector	1
50	1525596	Terminal	3
51	1608857	Clip	3
52	1534282	Clip	2
53	4140361	Cable Clip	3

FOOTNOTES:

a (Full Opt Only)

©2026 HYSTER COMPANY

NOTES

WIRE HARNESS (FIGURE 11-87)

CHASSIS (MID AND FULL OPTION) — POWERSHIFT TRANSMISSION (PAGE 2 OF 2) (3/2021 ↔ 9/2021)

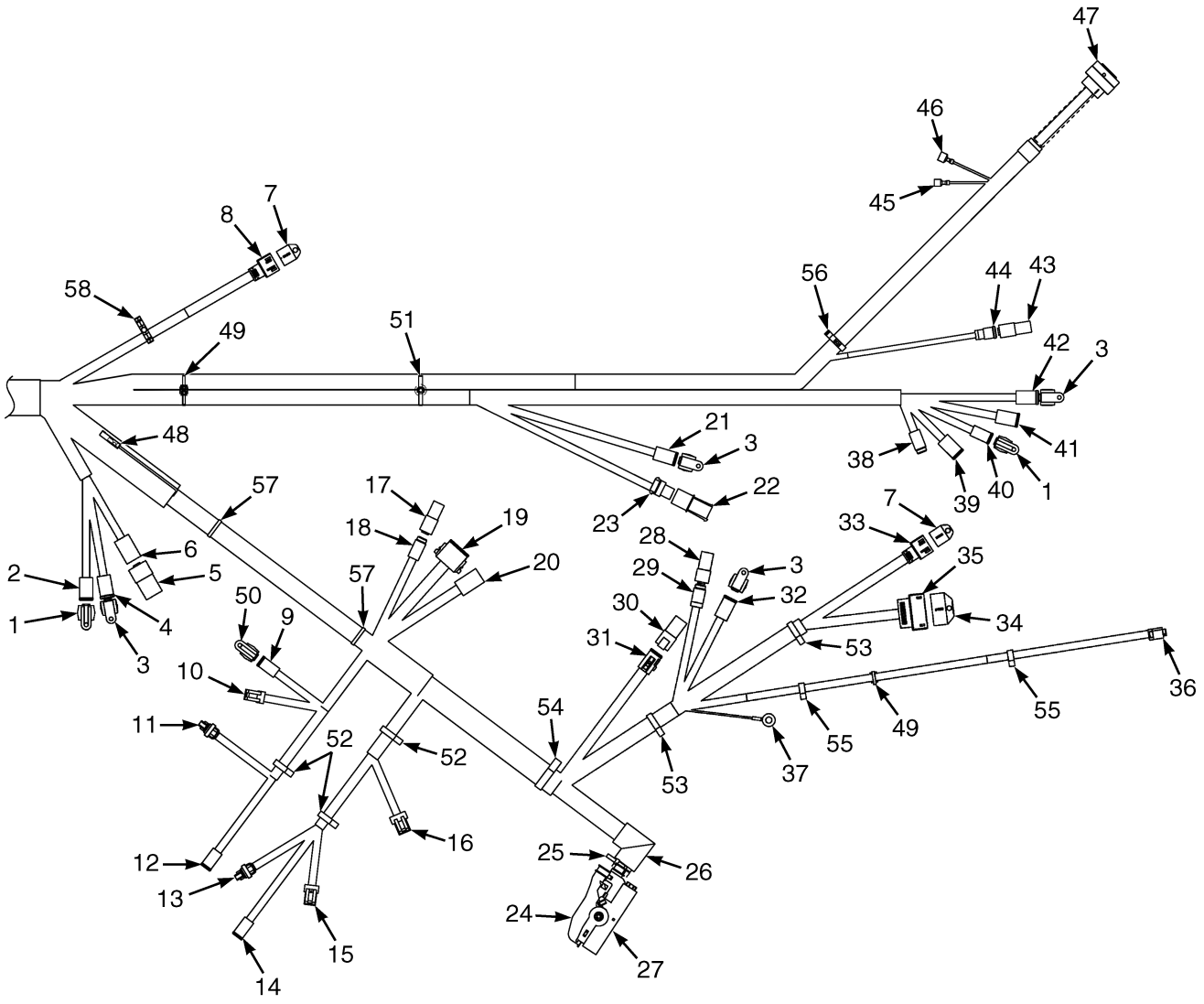

BP083285

©2026 HYSTER COMPANY

WIRE HARNESS

CHASSIS (MID AND FULL OPTION) – POWERSHIFT TRANSMISSION (PAGE 2 OF 2) (3/2021 ↔ 9/2021)

ITEM	PART NO.	DESCRIPTION	QTY
	4710001	Wire Harness - Chassis, Powershift Transmission (Full Opt)	1
	4710000	Wire Harness - Chassis, Powershift Transmission (Mid Opt)	1
1	4036873	Cap (6 Way)	1
2	. . . . .	Connector Assembly (CPS700) Object Detection Interconnection	1
2	1493430	Connector (6 Way Housing)	1
2	1529052	Connector (Secondary Lock)	1
2	1330438	Terminal (Socket)	6
3	4036523	Cap	2
4	. . . . .	Connector Assembly (CPS502) Impact Sensor	1
4	4167341	Connector	1
4	1489657	Connector (Secondary Lock)	1
4	1330438	Terminal (Socket)	4
5	. . . . .	Connector Assembly (CRP220) Aux 12V Power Connector #2 Cap	1
5	4047669	Connector (DTP REC 4-Pin)	1
5	1514598	Connector (Secondary Lock)	1
5	1330439	Plug Seal	4
6	. . . . .	Connector Assembly (CPS220) Aux 12V Power Connector #2	1
6	1632865	Connector (DTP PLU 4 Socket)	1
6	1514603	Connector (Secondary Lock)	1
6	1554359	Terminal	4
7	4700066	Cap	2
8	. . . . .	Connector Assembly (CRS13) iBox I1 (☞Figure 11-22, ☞Figure 11-21)	1
8	4135137	Connector	1
8	4137207	Terminal (Socket)	5
8	4655880	Terminal (MX150, 14-16 AWG)	2
8	4655881	Plug (Cavity)	1
9	. . . . .	Connector Assembly (CPS1419) Transmission Enable Valve	1
9	1490242	Connector (2 Way)	1
9	1490243	Connector (Secondary Lock)	1
9	1330438	Terminal (Socket)	2
10	. . . . .	Connector Assembly (CPS1400) Transmission Temp Sensor	1
10	1402868	Connector	1
10	4223854	Terminal	2
11	. . . . .	Connector Assembly (CRP1410) Forward Pressure Sensor	1
11	1603021	Connector	1
11	1603236	Connector (Secondary Lock)	1
11	4223853	Terminal	3
12	. . . . .	Connector Assembly (CPS1415) Proportional Valve (FWD)	1
12	1490242	Connector (2 Way)	1
12	1490243	Connector (Secondary Lock)	1
12	1330438	Terminal (Socket)	2
13	. . . . .	Connector Assembly (CRP1411) Reverse Pressure Sensor	1
13	1603021	Connector	1
13	1603236	Connector (Secondary Lock)	1
13	4223853	Terminal	3
14	. . . . .	Connector Assembly (CPS1416) Proportional Valve (REV)	1
14	1490242	Connector (2 Way)	1
14	1490243	Connector (Secondary Lock)	1
14	1330438	Terminal (Socket)	2
15	. . . . .	Connector Assembly (CPS1401) TISS Sensor	1

WIRE HARNESS

CHASSIS (MID AND FULL OPTION) – POWERSHIFT TRANSMISSION (PAGE 2 OF 2) (3/2021 ↔ 9/2021)

ITEM	PART NO.	DESCRIPTION	QTY
15	1546673	Connector (TISS)	1
15	4223854	Terminal	3
16	. . . . .	Connector Assembly (CPS1402) TOSS Sensor	1
16	1558156	Connector	1
16	4223854	Terminal	4
17	. . . . .	Connector Assembly (CRP587) Back-up Jumper Cap	1
17	~~4170087~~		
	1463184	Connector Housing	1
17	~~4046140~~		
	1463193	Connector	1
17	1484377	Plug	4
18	. . . . .	Connector Assembly (CPS587) Back-up Alarm Jumper	1
18	1463189	Connector	1
18	1463196	Connector (Secondary Lock, DTM PLU 4-Socket)	1
18	1463139	Terminal	4
19	. . . . .	Connector Assembly (CPS510) Engine Harness Connector #1	1
19	1493428	Connector (12-Way)	1
19	1500913	Connector (Secondary Lock)	1
19	1330438	Terminal (Socket)	10
19	1484377	Plug	2
20	. . . . .	Connector Assembly (CPS511) Engine Harness Connector #2	1
20	1632865	Connector (DTP PLU 4 Socket)	1
20	1514603	Connector (Secondary Lock)	1
20	1493434	Terminal (Socket)	1
20	1554359	Terminal	3
21	. . . . .	Connector Assembly (CPS433) Battery Contactor Control	1
21	1489656	Connector (4-Way)	1
21	1489657	Connector (Secondary Lock)	1
21	1330438	Terminal (Socket)	4
22	. . . . .	Connector Assembly (CRP671) Hyd Filter Switch Cap	1
22	1329150	Connector	1
22	1329151	Secondary Lock	1
22	1327164	Terminator	2
23	. . . . .	Connector Assembly (CPS671) Hyd Filter Switch	1
23	1329152	Plug	1
23	1329151	Secondary Lock	1
23	1330281	Terminal	2
24	4228361	Connector (Backshell)	1
25	137852	Strap Clamp	1
26	4023934	Clip	1
27	. . . . .	Connector Assembly (CRS52) Main PDM	1
27	4229521	Receptacle Housing	1
27	4177244	Terminal (Socket)	26
27	4229186	Terminal (Socket)	6
27	4229187	Terminal	1
27	1502919	Plug (Junior Timer Blanking Seal)	6
28	. . . . .	Connector Assembly (CRP582) LPG Tank Bracket Cap	1
28	~~4257399~~		
	1463180	Connector (DTM REC 3-Pin)	1
28	~~4257401~~	Connector (Secondary Lock)	1

©2026 HYSTER COMPANY

WIRE HARNESS

CHASSIS (MID AND FULL OPTION) – POWERSHIFT TRANSMISSION (PAGE 2 OF 2) (3/2021 ↔ 9/2021)

ITEM	PART NO.	DESCRIPTION	QTY
	1463191		
28	1484377	Plug	3
29	. . . . .	Connector Assembly (CPS582) LPG Tank Bracket Jumper	1
29	1493462	Connector (DTM PLU 3-Socket)	1
29	1493464	Connector (Secondary Lock)	1
29	1463139	Terminal	3
30	. . . . .	Connector Assembly (CRP530) Mast Jumper Cap	1
30	1531746	Electrical Connector	1
31	. . . . .	Connector Assembly (CPS530) Mast Jumper Harness	1
31	1493428	Connector (12-Way)	1
31	1500913	Connector (Secondary Lock)	1
31	1330438	Terminal (Socket)	8
31	1484377	Plug	4
32	. . . . .	Connector Assembly (CPS535) Steer Axle Position Sensor Jumper	1
32	1489656	Connector (4-Way)	1
32	1489657	Connector (Secondary Lock)	1
32	1330438	Terminal (Socket)	4
33	. . . . .	Connector Assembly (CRS11) iBox I1 (☞Figure 11-22, ☞Figure 11-21)	1
33	4135137	Connector	1
33	4137207	Terminal (Socket)	5
33	4655880	Terminal (MX150, 14-16 AWG)	2
33	4655881	Plug (Cavity)	1
34	4700067	Cap	1
35	. . . . .	Connector Assembly (CRS12) iBox I2 (☞Figure 11-22, ☞Figure 11-21)	1
35	4135138	Connector (MX150, Keying Option A)	1
35	4137207	Terminal (Socket)	12
35	4655880	Terminal (MX150, 14-16 AWG)	1
35	4655881	Plug (Cavity)	7
36	. . . . .	Connector Assembly (CPS230) Service Brake Pressure Sensor	1
36	1525595	Connector	1
36	1525596	Terminal	3
37	. . . . .	Connector Assembly (T448) Static Ground	1
37	1402620	Ring Terminal	1
38	. . . . .	Connector Assembly (CPS544) Rear OHG Harness	1
38	1531973	Connector	1
38	1531974	Connector (Secondary Lock)	1
38	1463139	Terminal	5
38	1484377	Plug	1
39	. . . . .	Connector Assembly (CPS542) Rear OHG Harness	1
39	1489656	Connector (4-Way)	1
39	1489657	Connector (Secondary Lock)	1
39	1330438	Terminal (Socket)	4
40	. . . . .	Connector Assembly (CPS279) OHG Horn Button	1
40	1490242	Connector (2 Way)	1
40	1490243	Connector (Secondary Lock)	1
41	. . . . .	Connector Assembly (CPS543) Rear OHG Harness	1
41	1330422	Connector (DT PLU 6-Socket)	1
41	1330428	Connector (Secondary Lock)	1
41	1330438	Terminal (Socket)	5
41	1330439	Plug Seal	1

©2026 HYSTER COMPANY

WIRE HARNESS

CHASSIS (MID AND FULL OPTION) – POWERSHIFT TRANSMISSION (PAGE 2 OF 2) (3/2021 ↔ 9/2021)

ITEM	PART NO.	DESCRIPTION	QTY
42	. . . . .	Connector Assembly (CPS571) Pedestrian Awareness Light Jumper	1
42	4167341	Connector	1
42	1489657	Connector (Secondary Lock)	1
42	1330438	Terminal (Socket)	4
43	. . . . .	Connector Assembly (CRP403) Remote Keyswitch Cap	1
43	1493465	Connector (2 Pin)	1
43	1330437	Terminal (Pin)	2
44	. . . . .	Connector Assembly (CPS403) Remote Keyswitch	1
44	4168181	Connector	1
44	1490243	Connector (Secondary Lock)	1
44	1330438	Terminal (Socket)	2
45	. . . . .	Connector Assembly (TF550) Seat Compressor Power (+)	1
45	1310142	Terminal	1
46	. . . . .	Connector Assembly (TM551) Seat Compressor Power (-)	1
46	1310143	Terminal (Male)	1
47	. . . . .	Connector Assembly (CPS531) Seat Harness	1
47	4176926	Connector	1
47	1463139	Terminal	15
47	1330438	Terminal (Socket)	2
47	1484377	Plug	3
48	. . . . .	Connector Assembly (T358) Heater	1
48	1324310	Terminal	1
49	4280606	Retainer (Cable Tie Clip)	2
50	4035905	Cap (DT 2-Way)	2
51	1616343	Strap Clamp	1
52	1509890	Clip	4
53	1608857	Clip	2
54	1540944	Clip	1
55	1509888	Clip (Conduit)	1
56	**a** 1646457	Clip	1
57	4140361	Cable Clip	1

FOOTNOTES:

a Full Option Only

©2026 HYSTER COMPANY

NOTES

WIRE HARNESS (FIGURE 11-88)

CHASSIS (MID OPTION) — POWERSHIFT TRANSMISSION (PAGE 1 OF 2) (9/2021 ↔ 11/2023)

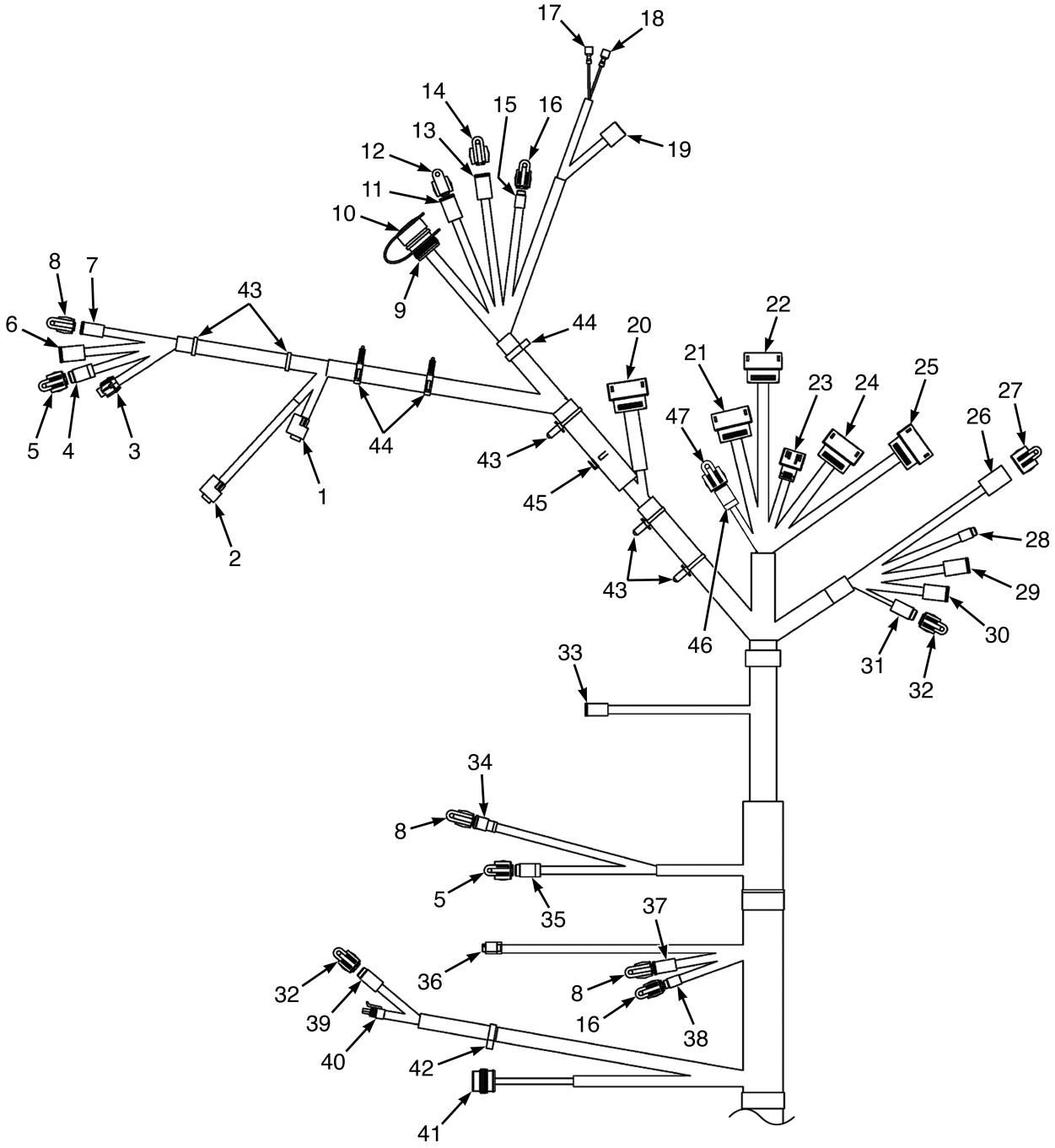

©2026 HYSTER COMPANY

WIRE HARNESS

CHASSIS (MID OPTION) – POWERSHIFT TRANSMISSION (PAGE 1 OF 2) (9/2021 ↔ 11/2023)

ITEM	PART NO.	DESCRIPTION	QTY
	a 4716886	Wire Harness (Chassis - Powershift Transmission (Mid Opt))	1
	b 4724260	Wire Harness (Chassis - Powershift Transmission (Mid Opt))	1
	4730800	Wire Harness (Chassis - Powershift Transmission (Mid Opt)) (Manufacturing Option)	1
1	. . . . .	Connector Assembly (CPS225) Service Brake Pedal Position Sensor	1
1	1700460	Connector	1
1	1700461	Terminal	3
2	. . . . .	Connector Assembly (CPS171) Parking Brake Position Sensor	1
2	1700460	Connector	1
2	1700461	Terminal	3
3	. . . . .	Connector Assembly (CPS231) Brake Fluid Level Sensor	1
3	. . . . .	Connector	1
3	4707064	Connector Lock	1
3	4701730	Terminal	2
3	. . . . .	Seal	2
4	. . . . .	Connector Assembly (CPS324) Ambient Light Sensor	1
4	1493462	Connector (DTM PLU 3-Socket)	1
4	1493464	Connector (Secondary Lock)	1
4	1463139	Terminal	3
5	4312824	Cap	2
6	. . . . .	Connector Assembly (CPS541) Left Front Work Light Harness	1
6	1489656	Connector (4-Way)	1
6	1489657	Connector (Secondary Lock)	1
6	1330438	Terminal (Socket)	4
7	. . . . .	Connector Assembly (CPS570) Forward Spot Light Jumper	1
7	1490242	Connector (2 Way)	1
7	1490243	Connector (Secondary Lock)	1
7	1330438	Terminal (Socket)	2
8	4035905	Cap (DT 2-Way)	3
9	4338200	Protector (Boot)	1
9	. . . . .	Connector Assembly (CPS501) Diagnostic Interface	1
9	**a** 4220326	Connector (9-Pin)	1
9	**b** 4350103	Connector	1
9	1330437	Terminal (Pin)	7
9	1484377	Plug	2
10	4180124	Cap	1
10	4236767	Dust Cap (Alternate Part)	1
11	. . . . .	Connector Assembly (CPS590) CAN Switch	1
11	1489656	Connector (4-Way)	1
11	1489657	Connector (Secondary Lock)	1
11	1330438	Terminal (Socket)	4
12	4036523	Cap	1
13	. . . . .	Connector Assembly (CPS589) CAN Switch	1
13	1493430	Connector (6 Way Housing)	1
13	1529052	Connector (Secondary Lock)	1
13	1330438	Terminal (Socket)	4
13	1484377	Plug	2
14	4036873	Cap (6 Way)	1
15	. . . . .	Connector Assembly (CPS655) RTST Override Button	1
15	1484557	Connector (2 Socket)	1

WIRE HARNESS

CHASSIS (MID OPTION) – POWERSHIFT TRANSMISSION (PAGE 1 OF 2) (9/2021 ↔ 11/2023)

ITEM	PART NO.	DESCRIPTION	QTY
15	1484558	Connector (Secondary Lock)	1
15	1463139	Terminal	2
16	4312823	Cap - DTM 2 Way	2
17	. . . . .	Connector Assembly (T234) Power Port (-)	1
17	1310142	Terminal	1
18	. . . . .	Connector Assembly (T233) Power Port (+)	1
18	1310142	Terminal	1
19	. . . . .	Connector Assembly (CPS232) USB Port	1
19	1484555	Connector Body (10-Way)	1
19	4178577	Terminal	2
20	. . . . .	Connector Assembly (CRS529) Column Harness	1
20	4135138	Connector (MX150, Keying Option A)	1
20	4137207	Terminal (Socket)	16
20	4331375	Plug	4
21	. . . . .	Connector Assembly (CRS4) VSM V4	1
21	4135140	Connector (MX150, Keying Option C)	1
21	4137207	Terminal (Socket)	18
21	4331375	Plug	2
22	. . . . .	Connector Assembly (CRS5) VSM V5	1
22	4135141	Connector (MX150, Keying Option D)	1
22	4137207	Terminal (Socket)	16
22	4331375	Plug	4
23	. . . . .	Connector Assembly (CRS1) VSM V1	1
23	4135136	Connector	1
23	4137207	Terminal (Socket)	6
23	4655880	Terminal (MX150, 14-16 AWG)	2
24	. . . . .	Connector Assembly (CRS2) VSM V2	1
24	4135138	Connector (MX150, Keying Option A)	1
24	4137207	Terminal (Socket)	18
24	4655880	Terminal (MX150, 14-16 AWG)	2
25	. . . . .	Connector Assembly (CRS3) VSM V3	1
25	4135139	Connector (MX150, Keying Option B)	1
25	4137207	Terminal (Socket)	17
25	4331375	Plug	3
26	. . . . .	Connector Assembly (CPS221) Aux 12V Power Connector #1	1
26	1632865	Connector (DTP PLU 4 Socket)	1
26	1514603	Connector (Secondary Lock)	1
26	1554359	Terminal	4
27	4312827	Cap	1
28	. . . . .	Connector Assembly (CPS521) Display Harness	1
28	1484557	Connector (2 Socket)	1
28	1484558	Connector (Secondary Lock)	1
28	1463139	Terminal	2
29	. . . . .	Connector Assembly (CPS520) Display Harness	1
29	1493430	Connector (6 Way Housing)	1
29	1529052	Connector (Secondary Lock)	1
29	1330438	Terminal (Socket)	6
30	. . . . .	Connector Assembly (CPS540) Right Front Work Light Harness	1
30	1489656	Connector (4-Way)	1
30	1489657	Connector (Secondary Lock)	1

See Service Manual for service procedures.
©2026 HYSTER COMPANY

WIRE HARNESS

CHASSIS (MID OPTION) – POWERSHIFT TRANSMISSION (PAGE 1 OF 2) (9/2021 ↔ 11/2023)

ITEM	PART NO.	DESCRIPTION	QTY
30	1330438	Terminal (Socket)	4
31	. . . . .	Connector Assembly (CPS575) To Card Reader Jumper	1
31	1463189	Connector	1
31	1463196	Connector (Secondary Lock, DTM PLU 4-Socket)	1
31	1463139	Terminal	4
32	4312825	Cap	2
33	. . . . .	Connector Assembly (CPS678) OPS Solenoid	1
33	1490242	Connector (2 Way)	1
33	1490243	Connector (Secondary Lock)	1
33	1330438	Terminal (Socket)	2
34	. . . . .	Connector Assembly (CPS1430) Engine Anti-Stall Solenoid	1
34	4168181	Connector	1
34	1490243	Connector (Secondary Lock)	1
34	1330438	Terminal (Socket)	2
35	. . . . .	Connector Assembly (CPS656) Tilt Spool Position	1
35	1493462	Connector (DTM PLU 3-Socket)	1
35	1493464	Connector (Secondary Lock)	1
35	1463139	Terminal	3
36	. . . . .	Connector Assembly (CPS637) Load Weigh Sensor	1
36	1525595	Connector	1
36	1525596	Terminal	3
36	~~1569975~~		
	1533810	Seal (Green)	3
37	. . . . .	Connector Assembly (CPS528) Hyd/VDP Temperature Sensor Jumper	1
37	1490242	Connector (2 Way)	1
37	1490243	Connector (Secondary Lock)	1
37	1330438	Terminal (Socket)	2
38	. . . . .	Connector Assembly (CPS561) Tilt Proportion Valve Jumper	1
38	1484557	Connector (2 Socket)	1
38	1484558	Connector (Secondary Lock)	1
38	1463139	Terminal	2
39	. . . . .	Connector Assembly (CPS226) Acc Pedal Direction Select	1
39	1463189	Connector	1
39	1463196	Connector (Secondary Lock, DTM PLU 4-Socket)	1
39	1463139	Terminal	4
40	. . . . .	Connector Assembly (CPS227) Acc Pedal Position Sensor	1
40	1525584	Connector	1
40	4223854	Terminal	6
41	. . . . .	Connector Assembly (CPS289) Horn	1
41	1508211	Connector (4 Way)	1
41	1508232	Terminal (Pin)	4
41	2060555	Wire Seal (Yellow)	4
42	1509890	Clip	1
43	4140361	Cable Clip	5
44	1608857	Clip	3
45	4276772	Retainer	1
46	**b**	Connector Assembly (CPS691) To Idle Up Kit	1
46	1493462	Connector (DTM PLU 3-Socket)	1
46	1493464	Connector (Secondary Lock)	1
46	1463139	Terminal	3

WIRE HARNESS

CHASSIS (MID OPTION) – POWERSHIFT TRANSMISSION (PAGE 1 OF 2) (9/2021 ↔ 11/2023)

ITEM	PART NO.	DESCRIPTION	QTY
47	**b** 4312824	Cap	1

FOOTNOTES:

a → 8/2022

b 8/2022 →

©2026 HYSTER COMPANY

NOTES

WIRE HARNESS (FIGURE 11-89)

CHASSIS (MID OPTION) — POWERSHIFT TRANSMISSION (PAGE 2 OF 2) (9/2021 ↔ 11/2023)

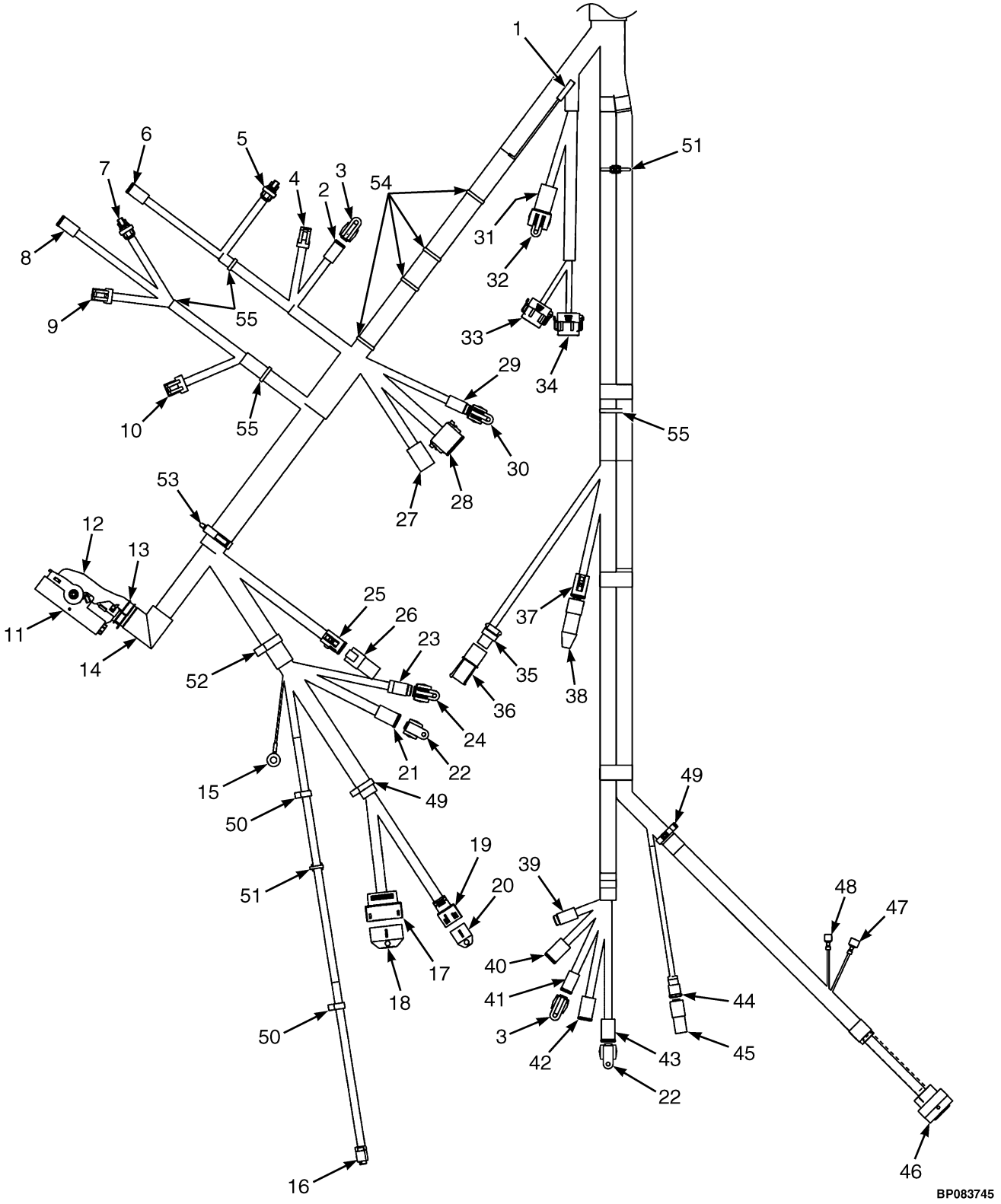

©2026 HYSTER COMPANY

WIRE HARNESS

CHASSIS (MID OPTION) – POWERSHIFT TRANSMISSION (PAGE 2 OF 2) (9/2021 ↔ 11/2023)

ITEM	PART NO.	DESCRIPTION	QTY
	a 4716886	Wire Harness (Chassis - Powershift Transmission (Mid Opt))	1
	b 4724260	Wire Harness (Chassis - Powershift Transmission (Mid Opt))	1
	4730800	Wire Harness (Chassis - Powershift Transmission (Mid Opt)) (Manufacturing Option)	1
1	. . . . .	Connector Assembly (T358) Heater	1
1	1324310	Terminal	1
1	1324309	Sleeve	1
2	. . . . .	Connector Assembly (CPS1419) Transmission Enable Valve	1
2	1490242	Connector (2 Way)	1
2	1490243	Connector (Secondary Lock)	1
2	1330438	Terminal (Socket)	2
3	4035905	Cap (DT 2-Way)	2
4	. . . . .	Connector Assembly (CPS1400) Transmission Temperature Sensor	1
4	1402868	Connector	1
4	4223854	Terminal	2
5	. . . . .	Connector Assembly (CRP1410) Forward Pressure Sensor	1
5	1603021	Connector	1
5	1603236	Connector (Secondary Lock)	1
5	4223853	Terminal	4
5	1548519	Seal	4
6	. . . . .	Connector Assembly (CPS1415) Proportional Valve (FWD)	1
6	1490242	Connector (2 Way)	1
6	1490243	Connector (Secondary Lock)	1
6	1330438	Terminal (Socket)	2
7	. . . . .	Connector Assembly (CRP1411) Reverse Pressure Sensor	1
7	1603021	Connector	1
7	1603236	Connector (Secondary Lock)	1
7	4223853	Terminal	3
7	1548519	Seal	3
8	. . . . .	Connector Assembly (CPS1416) Proportional Valve (REV)	1
8	1490242	Connector (2 Way)	1
8	1490243	Connector (Secondary Lock)	1
8	1330438	Terminal (Socket)	2
9	. . . . .	Connector Assembly (CPS1401) TISS Sensor	1
9	1546673	Connector (TISS)	1
9	4223854	Terminal	3
10	. . . . .	Connector Assembly (CPS1402) TOSS Sensor	1
10	1558156	Connector	1
10	4223854	Terminal	4
11	. . . . .	Connector Assembly (CRS52) Main PDM	1
11	4229521	Receptacle Housing	1
11	4177244	Terminal (Socket)	26
11	4229186	Terminal (Socket)	6
11	1502919	Plug (Junior Timer Blanking Seal)	6
11	4229187	Terminal	1
11	1562649	Seal	26
11	1479109	Seal	7
12	4228361	Connector (Backshell)	1
13	137852	Strap Clamp	1
14	4023934	Clip	1

©2026 HYSTER COMPANY

WIRE HARNESS

CHASSIS (MID OPTION) – POWERSHIFT TRANSMISSION (PAGE 2 OF 2) (9/2021 ↔ 11/2023)

ITEM	PART NO.	DESCRIPTION	QTY
15	. . . . .	Connector Assembly (T448) Static Ground	1
15	1402620	Ring Terminal	1
16	. . . . .	Connector Assembly (CPS230) Service Brake Pressure Sensor	1
16	1525595	Connector	1
16	1525596	Terminal	3
16	~~1569975~~		
	1533810	Seal (Green)	3
17	. . . . .	Connector Assembly (CRS12) iBox1 I2 (☞Figure 11-22, ☞Figure 11-21)	1
17	4135138	Connector (MX150, Keying Option A)	1
17	4137207	Terminal (Socket)	12
17	4655880	Terminal (MX150, 14-16 AWG)	1
17	4331375	Plug	7
18	4700067	Cap	1
19	. . . . .	Connector Assembly (CRS11) iBox1 I1 (☞Figure 11-22, ☞Figure 11-21)	1
19	4135137	Connector	1
19	4137207	Terminal (Socket)	5
19	4655880	Terminal (MX150, 14-16 AWG)	2
19	4331375	Plug	1
20	4700066	Cap	1
21	. . . . .	Connector Assembly (CPS535) Steer Axle Position Sensor Jumper	1
21	1489656	Connector (4-Way)	1
21	1489657	Connector (Secondary Lock)	1
21	1330438	Terminal (Socket)	4
22	4036523	Cap	2
23	. . . . .	Connector Assembly (CPS582) LPG Tank Bracket Jumper	1
23	1493462	Connector (DTM PLU 3-Socket)	1
23	1493464	Connector (Secondary Lock)	1
23	1463139	Terminal	3
24	4312824	Cap	1
25	. . . . .	Connector Assembly (CPS530) Mast Jumper Harness	1
25	1493428	Connector (12-Way)	1
25	1500913	Connector (Secondary Lock)	1
25	1330438	Terminal (Socket)	8
25	1484377	Plug	4
26	. . . . .	Connector Assembly (CRP530) Mast Jumper Cap	1
26	1531746	Electrical Connector	1
27	. . . . .	Connector Assembly (CPS511) Engine Harness Connector #2	1
27	1632865	Connector (DTP PLU 4 Socket)	1
27	1514603	Connector (Secondary Lock)	1
27	1493434	Terminal (Socket)	1
27	1554359	Terminal	3
28	. . . . .	Connector Assembly (CPS510) Engine Harness Connector #1	1
28	1493428	Connector (12-Way)	1
28	1500913	Connector (Secondary Lock)	1
28	1330438	Terminal (Socket)	10
28	1484377	Plug	2
29	. . . . .	Connector Assembly (CPS587) Backup Alarm Jumper	1
29	1463189	Connector	1
29	1463196	Connector (Secondary Lock, DTM PLU 4-Socket)	1
29	1463139	Terminal	4

©2026 HYSTER COMPANY

WIRE HARNESS

CHASSIS (MID OPTION) – POWERSHIFT TRANSMISSION (PAGE 2 OF 2) (9/2021 ↔ 11/2023)

ITEM	PART NO.	DESCRIPTION	QTY
30	4312825	Cap	1
31	. . . . .	Connector Assembly (CPS220) Aux 12V Power Connector #2	1
31	1632865	Connector (DTP PLU 4 Socket)	1
31	1514603	Connector (Secondary Lock)	1
31	1554359	Terminal	4
32	4312827	Cap	1
33	. . . . .	Connector Assembly (CPS506) VAM 2	1
33	1525568	Connector (STM PLU 12-Socket)	1
33	1529046	Connector (Secondary Lock)	1
33	1484377	Plug	8
33	1463139	Terminal	4
34	. . . . .	Connector Assembly (CPS505) VAM 1	1
34	1525567	Connector (DTM PLU 12-Socket)	1
34	1529046	Connector (Secondary Lock)	1
34	1463139	Terminal	5
34	1484377	Plug	7
35	. . . . .	Connector Assembly (CPS671) Hydraulic Filter Switch	1
35	1329152	Plug	1
35	1329151	Secondary Lock	1
35	1330281	Terminal	2
35	1402888	Seal (Purple)	2
36	. . . . .	Connector Assembly (CRP671) Hydraulic Filter Cap	1
36	1329150	Connector	1
36	1329151	Secondary Lock	1
36	1327164	Terminator	2
37	. . . . .	Connector Assembly (CPS504) CAN Terminal 4	1
37	1489656	Connector (4-Way)	1
37	1489657	Connector (Secondary Lock)	1
37	1484377	Plug	2
37	1330438	Terminal (Socket)	2
38	1525577	Connector (With Resistor)	1
39	. . . . .	Connector Assembly (CPS544) Rear OHG Harness	1
39	1463189	Connector	1
39	1463196	Connector (Secondary Lock, DTM PLU 4-Socket)	1
39	1484377	Plug	2
39	1463139	Terminal	2
40	. . . . .	Connector Assembly (CPS542) Rear OHG Harness	1
40	1489656	Connector (4-Way)	1
40	1489657	Connector (Secondary Lock)	1
40	1330438	Terminal (Socket)	4
41	. . . . .	Connector Assembly (CPS279) OHG Horn Button	1
41	1490242	Connector (2 Way)	1
41	1490243	Connector (Secondary Lock)	1
41	1330438	Terminal (Socket)	2
42	. . . . .	Connector Assembly (CPS543) Rear OHG Harness	1
42	1330422	Connector (DT PLU 6-Socket)	1
42	1330428	Connector (Secondary Lock)	1
42	1330438	Terminal (Socket)	5
42	1330439	Plug Seal	1
43	. . . . .	Connector Assembly (CPS571) Pedestrian Awareness Light Jumper	1

WIRE HARNESS

CHASSIS (MID OPTION) – POWERSHIFT TRANSMISSION (PAGE 2 OF 2) (9/2021 ↔ 11/2023)

ITEM	PART NO.	DESCRIPTION	QTY
43	4167341	Connector	1
43	1489657	Connector (Secondary Lock)	1
43	1330438	Terminal (Socket)	4
44	. . . . .	Connector Assembly (CPS403) Remote Keyswitch	1
44	4168181	Connector	1
44	1490243	Connector (Secondary Lock)	1
44	1330438	Terminal (Socket)	2
45	. . . . .	Connector Assembly (CRP403) Remote Keyswitch Jumper	1
45	1493465	Connector (2 Pin)	1
45	1330414	Connector (Secondary Lock)	1
45	1330437	Terminal (Pin)	2
46	. . . . .	Connector Assembly (CPS531) Seat Harness	1
46	4176926	Connector	1
46	1463139	Terminal	15
46	1330438	Terminal (Socket)	2
46	1484377	Plug	3
47	. . . . .	Connector Assembly (TM551) Seat Compressor Power (-)	1
47	1310143	Terminal (Male)	1
48	. . . . .	Connector Assembly (TF550) Seat Compressor Power (+)	1
48	1310142	Terminal	1
49	1608857	Clip	2
50	1509888	Clip (Conduit)	2
51	4280606	Retainer (Cable Tie Clip)	2
52	1509889	Clip	1
53	1540944	Clip	1
54	4140361	Cable Clip	7
55	1616343	Strap Clamp	1

FOOTNOTES:

a → 8/2022

b 8/2022 →

©2026 HYSTER COMPANY

NOTES

WIRE HARNESS (FIGURE 11-90)

CHASSIS (FULL OPTION) — POWERSHIFT TRANSMISSION (PAGE 1 OF 2) (9/2021 ↔ 11/2023)

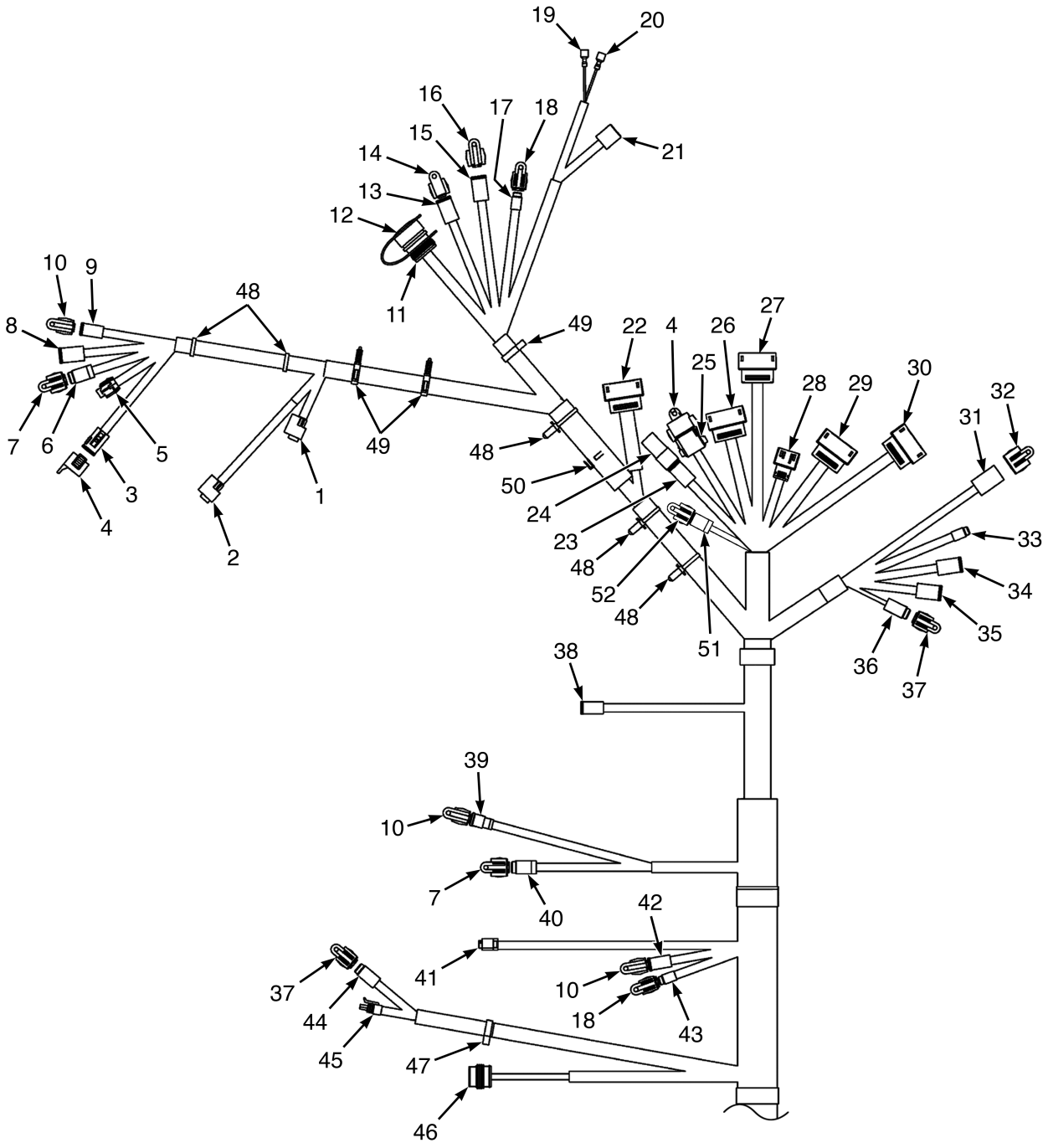

BP083746

©2026 HYSTER COMPANY

WIRE HARNESS

CHASSIS (FULL OPTION) – POWERSHIFT TRANSMISSION (PAGE 1 OF 2) (9/2021 ↔ 11/2023)

ITEM	PART NO.	DESCRIPTION	QTY
	a 4716887	Wire Harness (Chassis - Powershift Transmission (Full Opt))	1
	b 4724261	Wire Harness (Chassis - Powershift Transmission (Full Opt))	1
1	. . . . .	Connector Assembly (CPS225) Service Brake Pedal Position Sensor	1
1	1700460	Connector	1
1	1700461	Terminal	3
2	. . . . .	Connector Assembly (CPS171) Parking Brake Position Sensor	1
2	1700460	Connector	1
2	1700461	Terminal	3
3	. . . . .	Connector Assembly (CPS574) WBA Parking Brake Jumper	1
3	1525580	Connector	1
3	1502626	Connector (Secondary Lock)	1
3	1330438	Terminal (Socket)	8
4	4044070	Cap	2
5	. . . . .	Connector Assembly (CPS231) Brake Fluid Level Sensor	1
5	. . . . .	Connector	1
5	4707064	Connector Lock	1
5	4701730	Terminal	2
5	. . . . .	Seal	2
6	. . . . .	Connector Assembly (CPS324) Ambeint Light Sensor	1
6	1493462	Connector (DTM PLU 3-Socket)	1
6	1493464	Connector (Secondary Lock)	1
6	1463139	Terminal	3
7	4312824	Cap	2
8	. . . . .	Connector Assembly (CPS541) Left Front Work Light Harness	1
8	1489656	Connector (4-Way)	1
8	1489657	Connector (Secondary Lock)	1
8	1330438	Terminal (Socket)	4
9	. . . . .	Connector Assembly (CPS570) Forward Spot Light Jumper	1
9	1490242	Connector (2 Way)	1
9	1490243	Connector (Secondary Lock)	1
9	1330438	Terminal (Socket)	2
10	4035905	Cap (DT 2-Way)	3
11	4338200	Protector (Boot)	1
11	. . . . .	Connector Assembly (CPS501) Diagnostic Interface	1
11	**a** 4220326	Connector (9-Pin)	1
11	**b** 4350103	Connector	1
11	1330437	Terminal (Pin)	7
11	1484377	Plug	2
12	4180124	Cap	1
12	4236767	Dust Cap (Alternate Part)	1
13	. . . . .	Connector Assembly (CPS590) CAN Switch	1
13	1489656	Connector (4-Way)	1
13	1489657	Connector (Secondary Lock)	1
13	1330438	Terminal (Socket)	4
14	4036523	Cap	1
15	. . . . .	Connector Assembly (CPS589) CAN Switch	1
15	1493430	Connector (6 Way Housing)	1
15	1529052	Connector (Secondary Lock)	1
15	1330438	Terminal (Socket)	4
15	1484377	Plug	2

WIRE HARNESS

CHASSIS (FULL OPTION) – POWERSHIFT TRANSMISSION (PAGE 1 OF 2) (9/2021 ↔ 11/2023)

ITEM	PART NO.	DESCRIPTION	QTY
16	4036873	Cap (6 Way)	1
17	. . . . .	Connector Assembly (CPS655) RTST Override Button	1
17	1484557	Connector (2 Socket)	1
17	1484558	Connector (Secondary Lock)	1
17	1463139	Terminal	2
18	4312823	Cap - DTM 2 Way	2
19	. . . . .	Connector Assembly (T234) Power Port (-)	1
19	1310142	Terminal	1
20	. . . . .	Connector Assembly (T233) Power Port (+)	1
20	1310142	Terminal	1
21	. . . . .	Connector Assembly (CPS232) USB Port	1
21	1484555	Connector Body (10-Way)	1
21	4178577	Terminal	2
22	. . . . .	Connector Assembly (CRS529) Column Harness	1
22	4135138	Connector (MX150, Keying Option A)	1
22	4137207	Terminal (Socket)	16
22	4331375	Plug	4
23	. . . . .	Connector Assembly (CPS397) Cab Harness	1
23	1493430	Connector (6 Way Housing)	1
23	1529052	Connector (Secondary Lock)	1
23	1330438	Terminal (Socket)	6
24	. . . . .	Connector Assembly (CRP397) Cab Jumper Cap	1
24	1525589	Connector (6-Pin)	1
24	1330417	Connector (Secondary Lock)	1
24	1330437	Terminal (Pin)	4
24	1484377	Plug	2
25	. . . . .	Connector Assembly (CPS534) E-Hydraulic Harness	1
25	4176575	Connector	1
25	1502626	Connector (Secondary Lock)	1
25	1330438	Terminal (Socket)	6
25	1484377	Plug	2
26	. . . . .	Connector Assembly (CRS4) VSM V4	1
26	4135140	Connector (MX150, Keying Option C)	1
26	4137207	Terminal (Socket)	18
26	4331375	Plug	2
27	. . . . .	Connector Assembly (CRS5) VSM V5	1
27	4135141	Connector (MX150, Keying Option D)	1
27	4137207	Terminal (Socket)	16
27	4331375	Plug	4
28	. . . . .	Connector Assembly (CRS1) VSM V1	1
28	4135136	Connector	1
28	4137207	Terminal (Socket)	6
28	4655880	Terminal (MX150, 14-16 AWG)	2
29	. . . . .	Connector Assembly (CRS2) VSM V2	1
29	4135138	Connector (MX150, Keying Option A)	1
29	4137207	Terminal (Socket)	18
29	4655880	Terminal (MX150, 14-16 AWG)	2
30	. . . . .	Connector Assembly (CRS3) VSM V3	1
30	4135139	Connector (MX150, Keying Option B)	1
30	4137207	Terminal (Socket)	16

See Service Manual for service procedures.
©2026 HYSTER COMPANY

WIRE HARNESS

CHASSIS (FULL OPTION) – POWERSHIFT TRANSMISSION (PAGE 1 OF 2) (9/2021 ↔ 11/2023)

ITEM	PART NO.	DESCRIPTION	QTY
30	4331375	Plug	4
31	. . . . .	Connector Assembly (CPS221) Aux 12V Power Connector #1	1
31	1632865	Connector (DTP PLU 4 Socket)	1
31	1514603	Connector (Secondary Lock)	1
31	1554359	Terminal	4
32	4312827	Cap	1
33	. . . . .	Connector Assembly (CPS521) Display Harness	1
33	1484557	Connector (2 Socket)	1
33	1484558	Connector (Secondary Lock)	1
33	1463139	Terminal	2
34	. . . . .	Connector Assembly (CPS520) Display Harness	1
34	1493430	Connector (6 Way Housing)	1
34	1529052	Connector (Secondary Lock)	1
34	1330438	Terminal (Socket)	6
35	. . . . .	Connector Assembly (CPS540) Right Front Work Light Harness	1
35	1489656	Connector (4-Way)	1
35	1489657	Connector (Secondary Lock)	1
35	1330438	Terminal (Socket)	4
36	. . . . .	Connector Assembly (CPS575) To Card Reader Jumper	1
36	1463189	Connector	1
36	1463196	Connector (Secondary Lock, DTM PLU 4-Socket)	1
36	1463139	Terminal	4
37	4312825	Cap	2
38	. . . . .	Connector Assembly (CPS678) OPS Solenoid	1
38	1490242	Connector (2 Way)	1
38	1490243	Connector (Secondary Lock)	1
38	1330438	Terminal (Socket)	2
39	. . . . .	Connector Assembly (CPS1430) Engine Anti-Stall Solenoid	1
39	4168181	Connector	1
39	1490243	Connector (Secondary Lock)	1
39	1330438	Terminal (Socket)	2
40	. . . . .	Connector Assembly (CPS656) Tilt Spool Position	1
40	1493462	Connector (DTM PLU 3-Socket)	1
40	1493464	Connector (Secondary Lock)	1
40	1463139	Terminal	3
41	. . . . .	Connector Assembly (CPS637) Load Weigh Sensor	1
41	1525595	Connector	1
41	1525596	Terminal	3
41	~~1569975~~		
	1533810	Seal (Green)	3
42	. . . . .	Connector Assembly (CPS528) Hyd/VDP Temperature Sensor Jumper	1
42	1490242	Connector (2 Way)	1
42	1490243	Connector (Secondary Lock)	1
42	1330438	Terminal (Socket)	2
43	. . . . .	Connector Assembly (CPS561) Tilt Proportion Valve Jumper	1
43	1484557	Connector (2 Socket)	1
43	1484558	Connector (Secondary Lock)	1
43	1463139	Terminal	2
44	. . . . .	Connector Assembly (CPS226) Acc Pedal Direction Select	1
44	1463189	Connector	1

©2026 HYSTER COMPANY

WIRE HARNESS

CHASSIS (FULL OPTION) – POWERSHIFT TRANSMISSION (PAGE 1 OF 2) (9/2021 ↔ 11/2023)

ITEM	PART NO.	DESCRIPTION	QTY
44	1463196	Connector (Secondary Lock, DTM PLU 4-Socket)	1
44	1463139	Terminal	4
45	. . . . .	Connector Assembly (CPS227) Acc Pedal Position Sensor	1
45	1525584	Connector	1
45	4223854	Terminal	6
46	. . . . .	Connector Assembly (CPS289) Horn	1
46	1508211	Connector (4 Way)	1
46	1508232	Terminal (Pin)	4
46	2060555	Wire Seal (Yellow)	4
47	1509890	Clip	1
48	4140361	Cable Clip	5
49	1608857	Clip	3
50	4276772	Retainer	1
51	**b**	Connector Assembly (CPS691) To Idle Up Kit	1
51	1493462	Connector (DTM PLU 3-Socket)	1
51	1493464	Connector (Secondary Lock)	1
51	1463139	Terminal	3
52	**b** 4312824	Cap	1

FOOTNOTES:

a → 8/2022

b 8/2022 →

©2026 HYSTER COMPANY

NOTES

WIRE HARNESS (FIGURE 11-91)

CHASSIS (FULL OPTION) — POWERSHIFT TRANSMISSION (PAGE 2 OF 2) (9/2021 ↔ 11/2023)

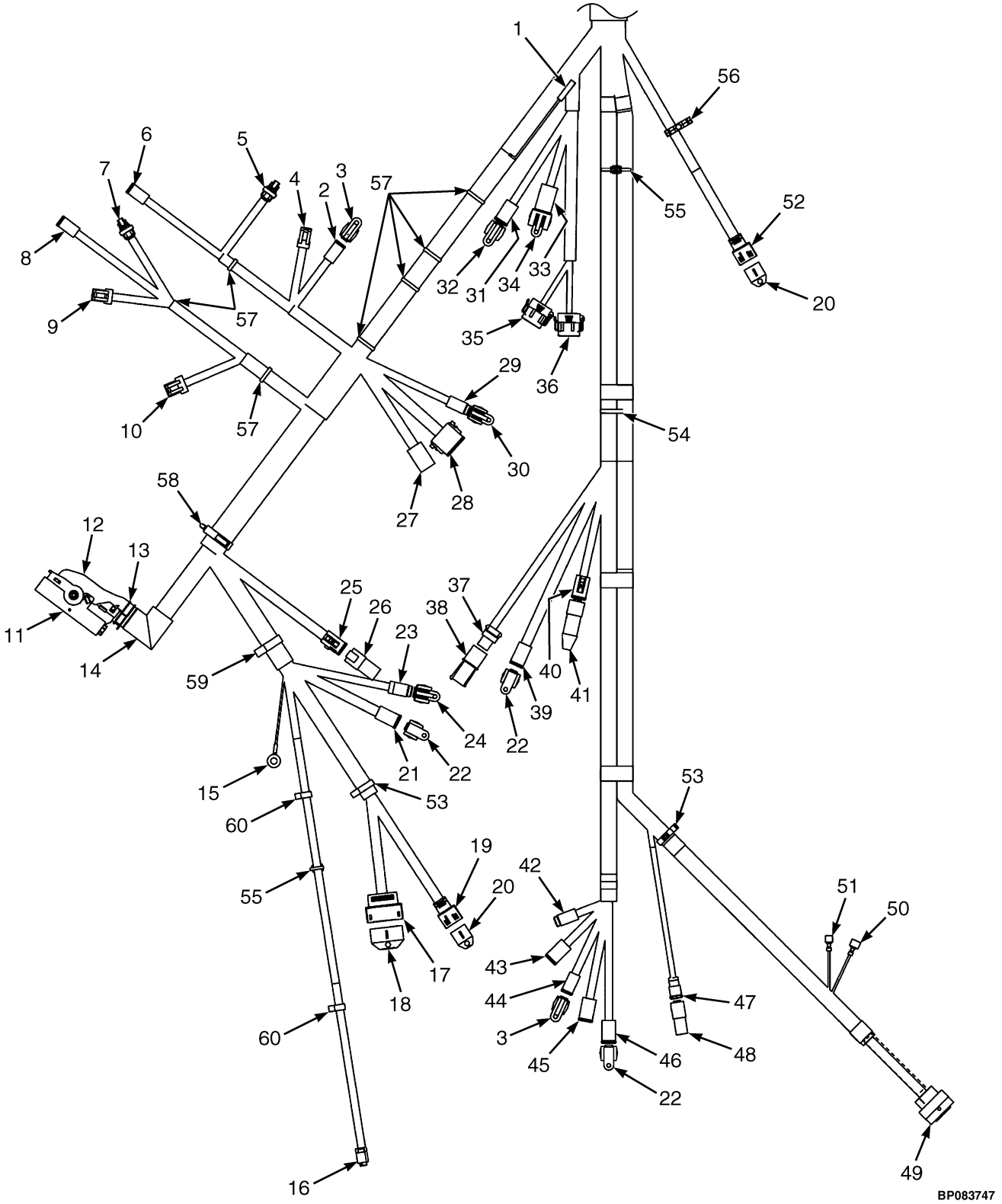

©2026 HYSTER COMPANY

WIRE HARNESS

CHASSIS (FULL OPTION) – POWERSHIFT TRANSMISSION (PAGE 2 OF 2) (9/2021 ↔ 11/2023)

ITEM	PART NO.	DESCRIPTION	QTY
	a 4716887	Wire Harness (Chassis - Powershift Transmission (Full Opt))	1
	b 4724261	Wire Harness (Chassis - Powershift Transmission (Full Opt))	1
1	. . . . .	Connector Assembly (T358) Heater	1
1	1324310	Terminal	1
1	1324309	Sleeve	1
2	. . . . .	Connector Assembly (CPS1419) Transmission Enable Valve	1
2	1490242	Connector (2 Way)	1
2	1490243	Connector (Secondary Lock)	1
2	1330438	Terminal (Socket)	2
3	4035905	Cap (DT 2-Way)	2
4	. . . . .	Connector Assembly (CPS1400) Transmission Temperature Sensor	1
4	1402868	Connector	1
4	4223854	Terminal	2
5	. . . . .	Connector Assembly (CRP1410) Forward Pressure Sensor	1
5	1603021	Connector	1
5	1603236	Connector (Secondary Lock)	1
5	4223853	Terminal	3
5	1548519	Seal	3
6	. . . . .	Connector Assembly (CPS1415) Proportional Valve (FWD)	1
6	1490242	Connector (2 Way)	1
6	1490243	Connector (Secondary Lock)	1
6	1330438	Terminal (Socket)	2
7	. . . . .	Connector Assembly (CRP1411) Reverse Pressure Sensor	1
7	1603021	Connector	1
7	1603236	Connector (Secondary Lock)	1
7	4223853	Terminal	3
7	1548519	Seal	3
8	. . . . .	Connector Assembly (CPS1416) Proportional Valve (REV)	1
8	1490242	Connector (2 Way)	1
8	1490243	Connector (Secondary Lock)	1
8	1330438	Terminal (Socket)	2
9	. . . . .	Connector Assembly (CPS1401) TISS Sensor	1
9	1546673	Connector (TISS)	1
9	4223854	Terminal	3
10	. . . . .	Connector Assembly (CPS1402) TOSS Sensor	1
10	1558156	Connector	1
10	4223854	Terminal	4
11	. . . . .	Connector Assembly (CRS52) Main PDM	1
11	4229521	Receptacle Housing	1
11	4177244	Terminal (Socket)	26
11	4229186	Terminal (Socket)	6
11	1502919	Plug (Junior Timer Blanking Seal)	6
11	4229187	Terminal	1
11	1562649	Seal	26
11	1479109	Seal	7
12	4228361	Connector (Backshell)	1
13	137852	Strap Clamp	1
14	4023934	Clip	1
15	. . . . .	Connector Assembly (T448) Static Ground	1
15	1402620	Ring Terminal	1

WIRE HARNESS

CHASSIS (FULL OPTION) – POWERSHIFT TRANSMISSION (PAGE 2 OF 2) (9/2021 ↔ 11/2023)

ITEM	PART NO.	DESCRIPTION	QTY
16	. . . . .	Connector Assembly (CPS230) Service Brake Pressure Sensor	1
16	1525595	Connector	1
16	1525596	Terminal	3
16	~~1569975~~		
	1533810	Seal (Green)	3
17	. . . . .	Connector Assembly (CRS12) iBox1 I2 (☞Figure 11-22, ☞Figure 11-21)	1
17	4135138	Connector (MX150, Keying Option A)	1
17	4137207	Terminal (Socket)	12
17	4655880	Terminal (MX150, 14-16 AWG)	1
17	4331375	Plug	7
18	4700067	Cap	1
19	. . . . .	Connector Assembly (CRS11) iBox1 I1 (☞Figure 11-22, ☞Figure 11-21)	1
19	4135137	Connector	1
19	4137207	Terminal (Socket)	5
19	4655880	Terminal (MX150, 14-16 AWG)	2
19	4331375	Plug	1
20	4700066	Cap	2
21	. . . . .	Connector Assembly (CPS535) Steer Axle Position Sensor Jumper	1
21	1489656	Connector (4-Way)	1
21	1489657	Connector (Secondary Lock)	1
21	1330438	Terminal (Socket)	4
22	4036523	Cap	3
23	. . . . .	Connector Assembly (CPS582) LPG Tank Bracket Jumper	1
23	1493462	Connector (DTM PLU 3-Socket)	1
23	1493464	Connector (Secondary Lock)	1
23	1463139	Terminal	3
24	4312824	Cap	1
25	. . . . .	Connector Assembly (CPS530) Mast Jumper Harness	1
25	1493428	Connector (12-Way)	1
25	1500913	Connector (Secondary Lock)	1
25	1330438	Terminal (Socket)	8
25	1484377	Plug	4
26	. . . . .	Connector Assembly (CRP530) Mast Jumper Cap	1
26	1531746	Electrical Connector	1
27	. . . . .	Connector Assembly (CPS511) Engine Harness Connector #2	1
27	1632865	Connector (DTP PLU 4 Socket)	1
27	1493434	Terminal (Socket)	1
27	1554359	Terminal	3
28	. . . . .	Connector Assembly (CPS510) Engine Harness Connector #1	1
28	1493428	Connector (12-Way)	1
28	1500913	Connector (Secondary Lock)	1
28	1330438	Terminal (Socket)	10
28	1484377	Plug	2
29	. . . . .	Connector Assembly (CPS587) Backup Alarm Jumper	1
29	1463189	Connector	1
29	1463196	Connector (Secondary Lock, DTM PLU 4-Socket)	1
29	1463139	Terminal	4
30	4312825	Cap	1
31	. . . . .	Connector Assembly (CPS700) Object Detection Interconnection	1
31	1493430	Connector (6 Way Housing)	1

©2026 HYSTER COMPANY

WIRE HARNESS

CHASSIS (FULL OPTION) – POWERSHIFT TRANSMISSION (PAGE 2 OF 2) (9/2021 ↔ 11/2023)

ITEM	PART NO.	DESCRIPTION	QTY
31	1529052	Connector (Secondary Lock)	1
31	1330438	Terminal (Socket)	6
32	4036873	Cap (6 Way)	1
33	. . . . .	Connector Assembly (CPS220) Aux 12V Power Connector #2	1
33	1632865	Connector (DTP PLU 4 Socket)	1
33	1514603	Connector (Secondary Lock)	1
33	1554359	Terminal	4
34	4312827	Cap	1
35	. . . . .	Connector Assembly (CPS506) VAM 2	1
35	1525568	Connector (STM PLU 12-Socket)	1
35	1529046	Connector (Secondary Lock)	1
35	1484377	Plug	8
35	1463139	Terminal	4
36	. . . . .	Connector Assembly (CPS505) VAM 1	1
36	1525567	Connector (DTM PLU 12-Socket)	1
36	1529046	Connector (Secondary Lock)	1
36	1463139	Terminal	5
36	1484377	Plug	7
37	. . . . .	Connector Assembly (CPS671) Hydraulic Filter Switch	1
37	1329152	Plug	1
37	1329151	Secondary Lock	1
37	1330281	Terminal	2
37	1402888	Seal (Purple)	2
38	. . . . .	Connector Assembly (CRP671) Hydraulic Filter Cap	1
38	1329150	Connector	1
38	1329151	Secondary Lock	1
38	1327164	Terminator	2
39	. . . . .	Connector Assembly (CPS433) Battery Contactor Control	1
39	1489656	Connector (4-Way)	1
39	1489657	Connector (Secondary Lock)	1
39	1330438	Terminal (Socket)	4
40	. . . . .	Connector Assembly (CPS504) CAN Terminal 4	1
40	1489656	Connector (4-Way)	1
40	1489657	Connector (Secondary Lock)	1
40	1484377	Plug	2
40	1330438	Terminal (Socket)	2
41	1525577	Connector (With Resistor)	1
42	. . . . .	Connector Assembly (CPS544) Rear OHG Harness	1
42	1463189	Connector	1
42	1463196	Connector (Secondary Lock, DTM PLU 4-Socket)	1
42	1484377	Plug	2
42	1463139	Terminal	2
43	. . . . .	Connector Assembly (CPS542) Rear OHG Harness	1
43	1489656	Connector (4-Way)	1
43	1489657	Connector (Secondary Lock)	1
43	1330438	Terminal (Socket)	4
44	. . . . .	Connector Assembly (CPS279) OHG Horn Button	1
44	1490242	Connector (2 Way)	1
44	1490243	Connector (Secondary Lock)	1
44	1330438	Terminal (Socket)	2

©2026 HYSTER COMPANY

WIRE HARNESS

CHASSIS (FULL OPTION) – POWERSHIFT TRANSMISSION (PAGE 2 OF 2) (9/2021 ↔ 11/2023)

ITEM	PART NO.	DESCRIPTION	QTY
45	. . . . .	Connector Assembly (CPS543) Rear OHG Harness	1
45	1330422	Connector (DT PLU 6-Socket)	1
45	1330428	Connector (Secondary Lock)	1
45	1330438	Terminal (Socket)	5
45	1330439	Plug Seal	1
46	. . . . .	Connector Assembly (CPS571) Pedestrian Awareness Light Jumper	1
46	4167341	Connector	1
46	1489657	Connector (Secondary Lock)	1
46	1330438	Terminal (Socket)	4
47	. . . . .	Connector Assembly (CPS403) Remote Keyswitch	1
47	4168181	Connector	1
47	1490243	Connector (Secondary Lock)	1
47	1330438	Terminal (Socket)	2
48	. . . . .	Connector Assembly (CRP403) Remote Keyswitch Jumper	1
48	1493465	Connector (2 Pin)	1
48	1330414	Connector (Secondary Lock)	1
48	1330437	Terminal (Pin)	2
49	. . . . .	Connector Assembly (CPS531) Seat Harness	1
49	4176926	Connector	1
49	1463139	Terminal	15
49	1330438	Terminal (Socket)	2
49	1484377	Plug	3
50	. . . . .	Connector Assembly (TM551) Seat Compressor Power (-)	1
50	1310143	Terminal (Male)	1
51	. . . . .	Connector Assembly (TF550) Seat Compressor Power (+)	1
51	1310142	Terminal	1
52	. . . . .	Connector Assembly (CRS13) iBox2 I1 (☞Figure 11-22, ☞Figure 11-21)	1
52	4135137	Connector	1
52	4137207	Terminal (Socket)	5
52	4655880	Terminal (MX150, 14-16 AWG)	2
52	4331375	Plug	1
53	1608857	Clip	2
54	1616343	Strap Clamp	1
55	4280606	Retainer (Cable Tie Clip)	2
56	1646457	Clip	1
57	4140361	Cable Clip	7
58	1540944	Clip	1
59	1509889	Clip	1
60	1509888	Clip (Conduit)	2

FOOTNOTES:

a → 8/2022

b 8/2022 →

©2026 HYSTER COMPANY

NOTES

WIRE HARNESS (FIGURE 11-92)

CHASSIS (MID AND FULL OPTION) — POWERSHIFT TRANSMISSION (11/2023 →)

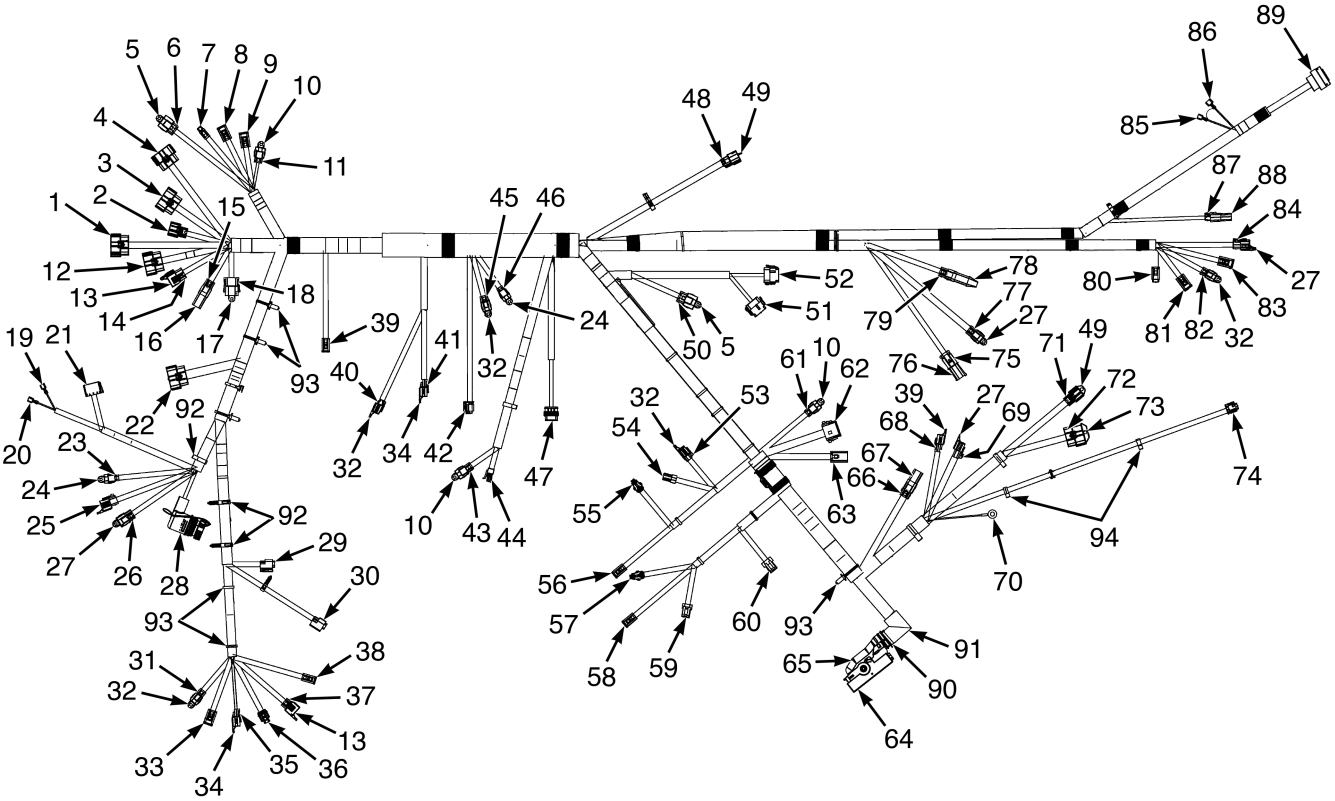

BP084512

©2026 HYSTER COMPANY

WIRE HARNESS

CHASSIS (MID AND FULL OPTION) – POWERSHIFT TRANSMISSION (11/2023 →)

ITEM	PART NO.	DESCRIPTION	QTY
	4730801	Wire Harness - Chassis, Powershift Transmission (Full Opt)	1
	4731517	Wire Harness - Chassis, Powershift Transmission (Full Opt) (Alternate Part)	1
	4731518	Wire Harness - Chassis, Powershift Transmission (Mid Opt)	1
1	. . . . .	Connector Assembly (CRS5) VSM V5	1
1	4135141	Connector (MX150, Keying Option D)	1
1	4137207	Terminal (Socket)	16
1	4331375	Plug	4
2	. . . . .	Connector Assembly (CRS1) VSM V1	1
2	4135136	Connector	1
2	4137207	Terminal (Socket)	6
2	4655880	Terminal (MX150, 14-16 AWG)	2
3	. . . . .	Connector Assembly (CRS2) VSM V2	1
3	4135138	Connector (MX150, Keying Option A)	1
3	4137207	Terminal (Socket)	18
3	4655880	Terminal (MX150, 14-16 AWG)	2
4	. . . . .	Connector Assembly (CRS3) VSM V3	1
4	4135139	Connector (MX150, Keying Option B)	1
4	4137207	Terminal (Socket)	18
4	4331375	Plug	2
5	4312827	Cap	2
6	. . . . .	Connector Assembly (CPS221) Aux 12v Power Connector 1	1
6	1632865	Connector (DTP PLU 4 Socket)	1
6	1514603	Connector (Secondary Lock)	1
6	1554359	Terminal	4
7	. . . . .	Connector Assembly (CPS521) Display Harness	1
7	1484557	Connector (2 Socket)	1
7	1484558	Connector (Secondary Lock)	1
7	1463139	Terminal	2
8	. . . . .	Connector Assembly (CPS520) Display Harness	1
8	1493430	Connector (6 Way Housing)	1
8	1529052	Connector (Secondary Lock)	1
8	1330438	Terminal (Socket)	4
8	1484377	Plug	2
9	. . . . .	Connector Assembly (CPS540) RH Front Work Light Harness	1
9	1489656	Connector (4-Way)	1
9	1489657	Connector (Secondary Lock)	1
9	1330438	Terminal (Socket)	4
10	4312825	Cap	3
11	. . . . .	Connector Assembly (CPS575) To Card Reader Jumper	1
11	1463189	Connector	1
11	1463196	Connector (Secondary Lock, DTM PLU 4-Socket)	1
11	1463139	Terminal	4
12	. . . . .	Connector Assembly (CRS4) VSM V4	1
12	4135140	Connector (MX150, Keying Option C)	1
12	4137207	Terminal (Socket)	18
12	4331375	Plug	2
13	4044070	Cap	2
14	. . . . .	Connector Assembly (CPS534) E-Hyd Harness	1
14	4176575	Connector	1
14	1502626	Connector (Secondary Lock)	1

WIRE HARNESS

CHASSIS (MID AND FULL OPTION) – POWERSHIFT TRANSMISSION (11/2023 →)

ITEM	PART NO.	DESCRIPTION	QTY
14	1330438	Terminal (Socket)	6
14	1484377	Plug	2
15	. . . . .	Connector Assembly (CPS397) Cab Harness	1
15	1493430	Connector (6 Way Housing)	1
15	1529052	Connector (Secondary Lock)	1
15	1330438	Terminal (Socket)	6
16	. . . . .	Connector Assembly (CRP397) Cab Jumper Cap	1
16	1525589	Connector (6-Pin)	1
16	1330417	Connector (Secondary Lock)	1
16	1330437	Terminal (Pin)	4
16	1484377	Plug	2
17	4361188	Cap	1
18	. . . . .	Connector Assembly (CPS691) M-Hyd Lever Harness	1
18	1541991	Connector (DTM PLU 8-Socket)	1
18	1541992	Connector (Secondary Lock)	1
18	1463139	Terminal	8
19	. . . . .	Connector Assembly (T233) Power Port (+)	1
19	1310142	Terminal	1
20	. . . . .	Connector Assembly (T234) Power Port (-)	1
20	1310142	Terminal	1
21	. . . . .	Connector Assembly (CPS232) USB Port	1
21	1484555	Connector Body (10-Way)	1
21	4178577	Terminal	2
22	. . . . .	Connector Assembly (CRS529) Column Harness	1
22	4135138	Connector (MX150, Keying Option A)	1
22	4137207	Terminal (Socket)	16
22	4331375	Plug	4
23	. . . . .	Connector Assembly (CPS655) RTST Override Button	1
23	1484557	Connector (2 Socket)	1
23	1484558	Connector (Secondary Lock)	1
23	1463139	Terminal	2
24	4312823	Cap - DTM 2 Way	2
25	. . . . .	Connector Assembly (CPS589) CAN Switch	1
25	1493430	Connector (6 Way Housing)	1
25	1529052	Connector (Secondary Lock)	1
25	1330438	Terminal (Socket)	4
25	1484377	Plug	2
26	. . . . .	Connector Assembly (CPS590) CAN Switch	1
26	1489656	Connector (4-Way)	1
26	1489657	Connector (Secondary Lock)	1
26	1330438	Terminal (Socket)	4
27	4036523	Cap	4
28	. . . . .	Connector Assembly (CPS501) Diagnostic Interface	1
28	4350103	Connector	1
28	1330437	Terminal (Pin)	7
28	1484377	Plug	2
29	. . . . .	Connector Assembly (CPS225) Service Brake Pedal Position Sensor	1
29	1700460	Connector	1
29	1700461	Terminal	3
30	. . . . .	Connector Assembly (CPS171) Park Brake Position Sensor	1

See Service Manual for service procedures.
©2026 HYSTER COMPANY

WIRE HARNESS

CHASSIS (MID AND FULL OPTION) – POWERSHIFT TRANSMISSION (11/2023 →)

ITEM	PART NO.	DESCRIPTION	QTY
30	1700460	Connector	1
30	1700461	Terminal	3
31	. . . . .	Connector Assembly (CPS570) Fwd Spot Light Jumper	1
31	1490242	Connector (2 Way)	1
31	1490243	Connector (Secondary Lock)	1
31	1330438	Terminal (Socket)	2
32	4035905	Cap (DT 2-Way)	5
33	. . . . .	Connector Assembly (CPS541) Left Front Work Light Harness	1
33	1489656	Connector (4-Way)	1
33	1489657	Connector (Secondary Lock)	1
33	1330438	Terminal (Socket)	4
34	4312824	Cap	3
35	. . . . .	Connector Assembly (CPS324) Ambient Light Sensor	1
35	1493462	Connector (DTM PLU 3-Socket)	1
35	1493464	Connector (Secondary Lock)	1
35	1463139	Terminal	3
36	. . . . .	Connector Assembly (CPS231) Brake Fluid Sensor	1
36	4722912	Connector	1
36	4707064	Connector Lock	1
36	4701730	Terminal	2
37	. . . . .	Connector Assembly (CPS574) Wet Brake Park Brake Jumper	1
37	1525580	Connector	1
37	1502626	Connector (Secondary Lock)	1
37	1330438	Terminal (Socket)	8
38	**a** 4321306	Connector (Jumper Cap)	1
38	. . . . .	Connector Assembly (CPS410) To Q-Current Switch	1
38	1490242	Connector (2 Way)	1
38	1490243	Connector (Secondary Lock)	1
38	1330438	Terminal (Socket)	2
39	. . . . .	Connector Assembly (CPS678) OPS Solenoid	1
39	1490242	Connector (2 Way)	1
39	1490243	Connector (Secondary Lock)	1
39	1330438	Terminal (Socket)	2
40	. . . . .	Connector Assembly (CPS1430) Eng Anti Stall Solenoid	1
40	4168181	Connector	1
40	1490243	Connector (Secondary Lock)	1
40	1330438	Terminal (Socket)	2
41	. . . . .	Connector Assembly (CPS656) Tilt Spool Position	1
41	1493462	Connector (DTM PLU 3-Socket)	1
41	1493464	Connector (Secondary Lock)	1
41	1463139	Terminal	3
42	. . . . .	Connector Assembly (CPS637) Load Weigh Sensor	1
42	1525595	Connector	1
42	1525596	Terminal	3
43	. . . . .	Connector Assembly (CPS226) Accelerator Pedal Direction Select	1
43	1463189	Connector	1
43	1463196	Connector (Secondary Lock, DTM PLU 4-Socket)	1
43	1463139	Terminal	4
44	. . . . .	Connector Assembly (CPS227) Accelerator Pedal Sensor	1
44	1525584	Connector	1

©2026 HYSTER COMPANY

WIRE HARNESS

CHASSIS (MID AND FULL OPTION) – POWERSHIFT TRANSMISSION (11/2023 →)

ITEM	PART NO.	DESCRIPTION	QTY
44	4223854	Terminal	6
45	. . . . .	Connector Assembly (CPS528) Hyd/VDP Temperature Sensor Jumper	1
45	1490242	Connector (2 Way)	1
45	1490243	Connector (Secondary Lock)	1
45	1330438	Terminal (Socket)	2
46	. . . . .	Connector Assembly (CPS561)Tilt Proportion Valve Jumper	1
46	1484557	Connector (2 Socket)	1
46	1484558	Connector (Secondary Lock)	1
46	1463139	Terminal	2
47	. . . . .	Connector Assembly (CPS289) Horn	1
47	1508211	Connector (4 Way)	1
47	1508232	Terminal (Pin)	4
48	. . . . .	Connector Assembly (CRS13) iBox I1 (☞Figure 11-22, ☞Figure 11-21)	1
48	4135137	Connector	1
48	4137207	Terminal (Socket)	5
48	4655880	Terminal (MX150, 14-16 AWG)	2
49	4700066	Cap	2
50	. . . . .	Connector Assembly (CPS220) Aux 12v Power Connector 2	1
50	1632865	Connector (DTP PLU 4 Socket)	1
50	1554359	Terminal	4
51	. . . . .	Connector Assembly (CPS506) VAM 2	1
51	1525568	Connector (STM PLU 12-Socket)	1
51	1529046	Connector (Secondary Lock)	1
51	1484377	Plug	8
51	1463139	Terminal	4
52	. . . . .	Connector Assembly (CPS505) VAM 1	1
52	1525567	Connector (DTM PLU 12-Socket)	1
52	1529046	Connector (Secondary Lock)	1
52	1463139	Terminal	5
52	1484377	Plug	7
53	. . . . .	Connector Assembly (CPS1419) Transmission Enable Valve	1
53	1490242	Connector (2 Way)	1
53	1490243	Connector (Secondary Lock)	1
53	1330438	Terminal (Socket)	2
54	. . . . .	Connector Assembly (CPS1400) Transmission Temperature Sensor	1
54	1402868	Connector	1
54	4223854	Terminal	2
55	. . . . .	Connector Assembly (CRP1410) Forward Pressure Sensor	1
55	1603021	Connector	1
55	4223853	Terminal	3
56	. . . . .	Connector Assembly (CPS1415) Proportional Valve (Fwd)	1
56	1490242	Connector (2 Way)	1
56	1490243	Connector (Secondary Lock)	1
56	1330438	Terminal (Socket)	2
57	. . . . .	Connector Assembly (CRP1411) Reverse Pressure Sensor	1
57	1603021	Connector	1
57	1603236	Connector (Secondary Lock)	1
57	4223853	Terminal	3
58	. . . . .	Connector Assembly (CPS1416) Proportional Valve (Rev)	1
58	1490242	Connector (2 Way)	1

©2026 HYSTER COMPANY

WIRE HARNESS

CHASSIS (MID AND FULL OPTION) – POWERSHIFT TRANSMISSION (11/2023 →)

ITEM	PART NO.	DESCRIPTION	QTY
58	1490243	Connector (Secondary Lock)	1
58	1330438	Terminal (Socket)	2
59	. . . . .	Connector Assembly (CPS1401) TISS Sensor	1
59	1546673	Connector (TISS)	1
59	4223854	Terminal	3
60	. . . . .	Connector Assembly (CPS1402) TOSS Sensor	1
60	1558156	Connector	1
60	4223854	Terminal	4
61	. . . . .	Connector Assembly (CPS587) Backup Alarm Jumper	1
61	1463189	Connector	1
61	1463196	Connector (Secondary Lock, DTM PLU 4-Socket)	1
61	1463139	Terminal	4
62	. . . . .	Connector Assembly (CPS510) Engine Harness Connection 1	1
62	1493428	Connector (12-Way)	1
62	1500913	Connector (Secondary Lock)	1
62	1330438	Terminal (Socket)	10
62	1484377	Plug	2
63	. . . . .	Connector Assembly (CPS511) Engine Harness Connection 2	1
63	1632865	Connector (DTP PLU 4 Socket)	1
63	1514603	Connector (Secondary Lock)	1
63	1493434	Terminal (Socket)	1
63	1554359	Terminal	3
64	. . . . .	Connector Assembly (CRS52) Main PDM	1
64	4229521	Receptacle Housing	1
64	4177244	Terminal (Socket)	25
64	4229186	Terminal (Socket)	6
64	1502919	Plug (Junior Timer Blanking Seal)	7
64	4229187	Terminal	1
65	4228361	Connector (Backshell)	1
66	. . . . .	Connector Assembly (CPS530) Mast Jumper Harness	1
66	1493428	Connector (12-Way)	1
66	1500913	Connector (Secondary Lock)	1
66	1330438	Terminal (Socket)	8
66	1484377	Plug	4
67	. . . . .	Connector Assembly (CRP530) Mast Jumper Cap	1
67	1531746	Electrical Connector	1
68	. . . . .	Connector Assembly (CPS582) LPG Tank Bracket Jumper	1
68	1493462	Connector (DTM PLU 3-Socket)	1
68	1493464	Connector (Secondary Lock)	1
68	1463139	Terminal	3
69	. . . . .	Connector Assembly (CPS535) Steer Axle Position Sensor Jumper	1
69	1489656	Connector (4-Way)	1
69	1489657	Connector (Secondary Lock)	1
69	1330438	Terminal (Socket)	4
70	. . . . .	Connector Assembly (T448) Static Ground	1
70	1402620	Ring Terminal	1
71	. . . . .	Connector Assembly (CRS11) iBox1 I1 (☞Figure 11-22, ☞Figure 11-21)	1
71	4135137	Connector	1
71	4137207	Terminal (Socket)	5
71	4331375	Plug	1

WIRE HARNESS

CHASSIS (MID AND FULL OPTION) – POWERSHIFT TRANSMISSION (11/2023 →)

ITEM	PART NO.	DESCRIPTION	QTY
71	4655880	Terminal (MX150, 14-16 AWG)	2
72	. . . . .	Connector Assembly (CRS12) iBox1 I2 (☞Figure 11-22, ☞Figure 11-21)	1
72	4135138	Connector (MX150, Keying Option A)	1
72	4137207	Terminal (Socket)	15
72	4655880	Terminal (MX150, 14-16 AWG)	1
72	4331375	Plug	4
73	4700067	Cap	1
74	. . . . .	Connector Assembly (CPS230) Service Brake Pressure Sensor	1
74	1525595	Connector	1
74	1525596	Terminal	3
75	. . . . .	Connector Assembly (CPS671) Hyd Filter Switch	1
75	1329152	Plug	1
75	1329151	Secondary Lock	1
75	1330281	Terminal	2
76	. . . . .	Connector Assembly (CRP671) Hyd Filter Cap	1
76	1329150	Connector	1
76	1329151	Secondary Lock	1
76	1327164	Terminator	2
77	. . . . .	Connector Assembly (CPS433) Battery Contactor Control	1
77	1489656	Connector (4-Way)	1
77	1489657	Connector (Secondary Lock)	1
77	1330438	Terminal (Socket)	4
78	1525577	Connector (With Resistor)	1
79	. . . . .	Connector Assembly (CPS504) CAN Terminal 4	1
79	1489656	Connector (4-Way)	1
79	1489657	Connector (Secondary Lock)	1
79	1330438	Terminal (Socket)	2
79	1484377	Plug	2
80	. . . . .	Connector Assembly (CPS544) Rear OHG Harness	1
80	1463189	Connector	1
80	1463196	Connector (Secondary Lock, DTM PLU 4-Socket)	1
80	1463139	Terminal	2
80	1484377	Plug	2
81	. . . . .	Connector Assembly (CPS542) Rear OHG Harness	1
81	1489656	Connector (4-Way)	1
81	1489657	Connector (Secondary Lock)	1
81	1330438	Terminal (Socket)	4
82	. . . . .	Connector Assembly (CPS279) OHG Horn Button	1
82	1490242	Connector (2 Way)	1
82	1490243	Connector (Secondary Lock)	1
82	1330438	Terminal (Socket)	2
83	. . . . .	Connector Assembly (CPS543) Rear OHG Harness	1
83	1330422	Connector (DT PLU 6-Socket)	1
83	1330428	Connector (Secondary Lock)	1
83	1330438	Terminal (Socket)	6
84	. . . . .	Connector Assembly (CPS571) Pedestrian Awareness Light Jumper	1
84	4167341	Connector	1
84	1489657	Connector (Secondary Lock)	1
84	1330438	Terminal (Socket)	4
85	. . . . .	Connector Assembly (TF550) Seat Compressor (+)	1

©2026 HYSTER COMPANY

WIRE HARNESS

CHASSIS (MID AND FULL OPTION) – POWERSHIFT TRANSMISSION (11/2023 →)

ITEM	PART NO.	DESCRIPTION	QTY
85	1310142	Terminal	1
86	. . . . .	Connector Assembly (TF551) Seat Compressor (-)	1
86	1310143	Terminal (Male)	1
87	. . . . .	Connector Assembly (CPS403) Remote Keyswitch	1
87	4168181	Connector	1
87	1490243	Connector (Secondary Lock)	1
87	1330438	Terminal (Socket)	2
88	. . . . .	Connector Assembly (CRP) Remote Keyswitch Jumper	1
88	1493465	Connector (2 Pin)	1
88	1330414	Connector (Secondary Lock)	1
88	1330437	Terminal (Pin)	2
89	. . . . .	Connector Assembly (CPS531) Seat Harness	1
89	4176926	Connector	1
89	1463139	Terminal	15
89	1330438	Terminal (Socket)	2
89	1484377	Plug	3
90	137852	Strap Clamp	1
91	4023934	Clip	1
92	1608857	Clip	5
93	4140361	Cable Clip	13
94	1509888	Clip (Conduit)	3

FOOTNOTES:

a If CPS410 is installed and without Q-Switch or E-Box then this jumper cap needs to be installed.

WIRE HARNESS (FIGURE 11-93)

CHASSIS (BASE OPTION) — DIESEL IDI - SINGLE SPEED TRANSMISSION (→ 3/2024)

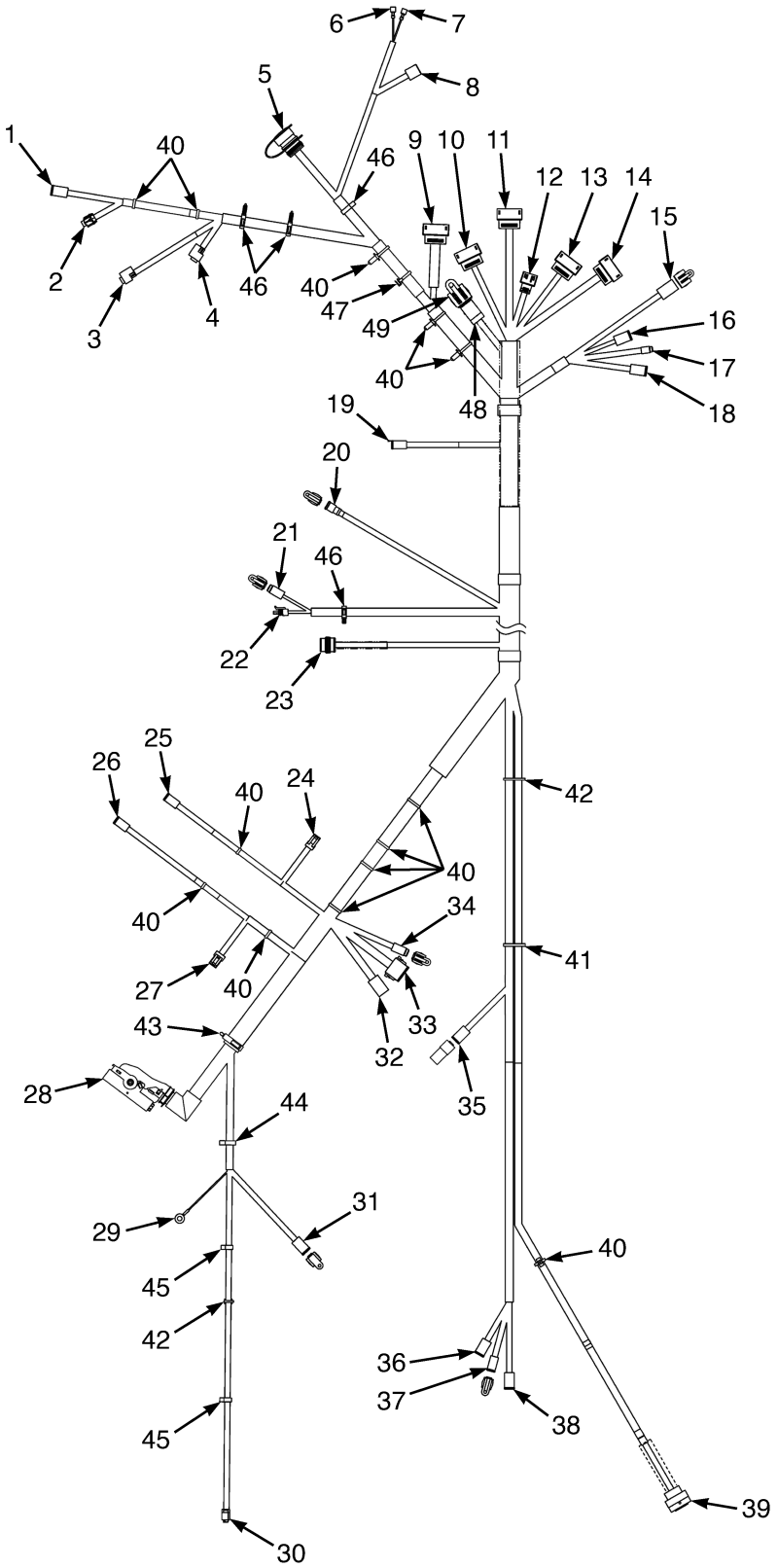

©2026 HYSTER COMPANY

WIRE HARNESS

CHASSIS (BASE OPTION) – DIESEL IDI - SINGLE SPEED TRANSMISSION (→ 3/2024)

ITEM	PART NO.	DESCRIPTION	QTY
	a 4716888	Wire Harness (Chassis - Diesel IDI Transmission (Base Opt))	1
	b 4724418	Wire Harness (Chassis - Diesel IDI Transmission (Base Opt))	1
	c 4725041	Wire Harness (Chassis - Diesel IDI Transmission (Base Opt))	1
1	. . . . .	Connector Assembly (CPS541) Left Front Work Light Harness	1
1	1489656	Connector (4-Way)	1
1	1489657	Connector (Secondary Lock)	1
1	1330438	Terminal (Socket)	4
2	. . . . .	Connector Assembly (CPS231) Brake Fluid Level Sensor	1
2	. . . . .	Connector	1
2	4707064	Connector Lock	1
2	4701730	Terminal	2
2	. . . . .	Seal	2
3	. . . . .	Connector Assembly (CPS171) Parking Brake Position Sensor	1
3	1700460	Connector	1
3	1700461	Terminal	3
4	. . . . .	Connector Assembly (CPS225) Service Brake Pedal Position Sensor	1
4	1700460	Connector	1
4	1700461	Terminal	3
5	4338200	Protector (Boot)	1
5	. . . . .	Connector Assembly (CPS501) Diagnostic Interface	1
5	4220326	Connector (9-Pin)	1
5	4350103	Connector (Alternate Part)	1
5	1330437	Terminal (Pin)	5
5	1484377	Plug	4
5	4180124	Cap	1
5	4236767	Dust Cap (Alternate Part)	1
6	. . . . .	Connector Assembly (T234) Power Port (-)	1
6	1310142	Terminal	1
7	. . . . .	Connector Assembly (T233) Power Port (+)	1
7	1310142	Terminal	1
8	. . . . .	Connector Assembly (CRS320) Work Light Switch	1
8	1484555	Connector Body (10-Way)	1
8	4178577	Terminal	4
9	. . . . .	Connector Assembly (CRS529) Column Harness	1
9	4135138	Connector (MX150, Keying Option A)	1
9	4137207	Terminal (Socket)	15
9	4331375	Plug	5
10	. . . . .	Connector Assembly (CRS4) VSM V4	1
10	4135140	Connector (MX150, Keying Option C)	1
10	4137207	Terminal (Socket)	10
10	4331375	Plug	10
11	. . . . .	Connector Assembly (CRS5) VSM V5	1
11	4135141	Connector (MX150, Keying Option D)	1
11	4137207	Terminal (Socket)	11
11	4331375	Plug	9
12	. . . . .	Connector Assembly (CRS1) VSM V1	1
12	4135136	Connector	1
12	4137207	Terminal (Socket)	6
12	4655880	Terminal (MX150, 14-16 AWG)	2
13	. . . . .	Connector Assembly (CRS2) VSM V2	1

WIRE HARNESS

CHASSIS (BASE OPTION) – DIESEL IDI - SINGLE SPEED TRANSMISSION (→ 3/2024)

ITEM	PART NO.	DESCRIPTION	QTY
13	4135138	Connector (MX150, Keying Option A)	1
13	4137207	Terminal (Socket)	13
13	4331375	Plug	5
13	4655880	Terminal (MX150, 14-16 AWG)	2
14	. . . . .	Connector Assembly (CRS3) VSM V3	1
14	4135139	Connector (MX150, Keying Option B)	1
14	4137207	Terminal (Socket)	11
14	4331375	Plug	9
15	. . . . .	Connector Assembly (CPS221) Aux 12V Power Connector #1	1
15	1632865	Connector (DTP PLU 4 Socket)	1
15	1514603	Connector (Secondary Lock)	1
15	1554359	Terminal	4
15	4312827	Cap	1
16	. . . . .	Connector Assembly (CPS540) Right Front Work Light Harness	1
16	1489656	Connector (4-Way)	1
16	1489657	Connector (Secondary Lock)	1
16	1330438	Terminal (Socket)	4
17	. . . . .	Connector Assembly (CPS521) Display Harness	1
17	1484557	Connector (2 Socket)	1
17	1484558	Connector (Secondary Lock)	1
17	1463139	Terminal	2
18	. . . . .	Connector Assembly (CPS520) Display Harness	1
18	1493430	Connector (6 Way Housing)	1
18	1529052	Connector (Secondary Lock)	1
18	1330438	Terminal (Socket)	4
18	1484377	Plug	2
19	. . . . .	Connector Assembly (CPS678) OPS Solenoid	1
19	1490242	Connector (2 Way)	1
19	1490243	Connector (Secondary Lock)	1
19	1330438	Terminal (Socket)	2
20	. . . . .	Connector Assembly (CPS1430) Engine Anti-Stall Solenoid	1
20	4168181	Connector	1
20	1490243	Connector (Secondary Lock)	1
20	1330438	Terminal (Socket)	2
20	4035905	Cap (DT 2-Way)	1
21	. . . . .	Connector Assembly (CPS226) Acc Pedal Direction Select	1
21	1463189	Connector	1
21	1463196	Connector (Secondary Lock, DTM PLU 4-Socket)	1
21	1463139	Terminal	4
21	4312825	Cap	1
22	. . . . .	Connector Assembly (CPS227) Acc Pedal Position Sensor	1
22	1525584	Connector	1
22	4223854	Terminal	6
23	. . . . .	Connector Assembly (CPS289) Horn	1
23	1508211	Connector (4 Way)	1
23	1508232	Terminal (Pin)	4
23	2060555	Wire Seal (Yellow)	4
24	. . . . .	Connector Assembly (CPS1400) Transmission Temperature Sensor	1
24	1402868	Connector	1
24	4223854	Terminal	2

See Service Manual for service procedures.
©2026 HYSTER COMPANY

WIRE HARNESS

CHASSIS (BASE OPTION) – DIESEL IDI - SINGLE SPEED TRANSMISSION (→ 3/2024)

ITEM	PART NO.	DESCRIPTION	QTY
25	. . . . .	Connector Assembly (CPS1415) Proportional Valve (FWD)	1
25	1490242	Connector (2 Way)	1
25	1490243	Connector (Secondary Lock)	1
25	1330438	Terminal (Socket)	2
26	. . . . .	Connector Assembly (CPS1416) Proportional Valve (REV)	1
26	1490242	Connector (2 Way)	1
26	1490243	Connector (Secondary Lock)	1
26	1330438	Terminal (Socket)	2
27	. . . . .	Connector Assembly (CPS1403) TOSS Sensor	1
27	1546673	Connector (TISS)	1
27	4223854	Terminal	3
28	. . . . .	Connector Assembly (CRS52) Main PDM	1
28	4229521	Receptacle Housing	1
28	4177244	Terminal (Socket)	25
28	4229186	Terminal (Socket)	5
28	1502919	Plug (Junior Timer Blanking Seal)	8
28	4229187	Terminal	1
28	1562649	Seal	25
28	1479109	Seal	6
28	137852	Strap Clamp	1
28	4023934	Clip	1
28	4228361	Connector (Backshell)	1
29	. . . . .	Connector Assembly (T448) Static Ground	1
29	1402620	Ring Terminal	1
30	. . . . .	Connector Assembly (CPS230) Service Brake Pressure Sensor	1
30	1525595	Connector	1
30	1525596	Terminal	3
30	~~1569975~~		
	1533810	Seal (Green)	3
31	. . . . .	Connector Assembly (CPS535) Steer Axle Position Sensor Jumper	1
31	1489656	Connector (4-Way)	1
31	1489657	Connector (Secondary Lock)	1
31	1330438	Terminal (Socket)	4
31	4036523	Cap	1
32	. . . . .	Connector Assembly (CPS511) Engine Harness Connector #2	1
32	1632865	Connector (DTP PLU 4 Socket)	1
32	1514603	Connector (Secondary Lock)	1
32	1493434	Terminal (Socket)	1
32	1330439	Plug Seal	1
32	1554359	Terminal	2
33	. . . . .	Connector Assembly (CPS510) Engine Harness Connector #1	1
33	1493428	Connector (12-Way)	1
33	1500913	Connector (Secondary Lock)	1
33	1330438	Terminal (Socket)	11
33	1484377	Plug	1
34	. . . . .	Connector Assembly (CPS587) Backup Alarm Jumper	1
34	1463189	Connector	1
34	1463196	Connector (Secondary Lock, DTM PLU 4-Socket)	1
34	1484377	Plug	2
34	1463139	Terminal	2

WIRE HARNESS

CHASSIS (BASE OPTION) – DIESEL IDI - SINGLE SPEED TRANSMISSION (→ 3/2024)

ITEM	PART NO.	DESCRIPTION	QTY
34	4312825	Cap	1
35	. . . . .	Connector Assembly (CPS504) CAN Terminal 4	1
35	1489656	Connector (4-Way)	1
35	1489657	Connector (Secondary Lock)	1
35	1484377	Plug	2
35	1330438	Terminal (Socket)	2
35	1525577	Connector (With Resistor)	1
36	. . . . .	Connector Assembly (CPS542) Rear OHG Harness	1
36	1489656	Connector (4-Way)	1
36	1489657	Connector (Secondary Lock)	1
36	1330438	Terminal (Socket)	2
36	1484377	Plug	2
37	. . . . .	Connector Assembly (CPS279) OHG Horn Button	1
37	1490242	Connector (2 Way)	1
37	1490243	Connector (Secondary Lock)	1
37	1330438	Terminal (Socket)	2
37	4035905	Cap (DT 2-Way)	1
38	. . . . .	Connector Assembly (CPS543) Rear OHG Harness	1
38	1330422	Connector (DT PLU 6-Socket)	1
38	1330428	Connector (Secondary Lock)	1
38	1330438	Terminal (Socket)	5
38	1330439	Plug Seal	1
39	. . . . .	Connector Assembly (CPS531) Seat Harness	1
39	4176926	Connector	1
39	1463139	Terminal	6
39	1484377	Plug	14
40	4140361	Cable Clip	13
41	1616343	Strap Clamp	1
42	4280606	Retainer (Cable Tie Clip)	2
43	1540944	Clip	1
44	1500901	Clip (Conduit)	1
45	1509888	Clip (Conduit)	2
46	1509890	Clip	4
47	4276772	Retainer	1
48	**c**	Connector Assembly (CPS691) M-Hyd Lever Harness	1
48	1493462	Connector (DTM PLU 3-Socket)	1
48	1493464	Connector (Secondary Lock)	1
48	1463139	Terminal	3
49	**c** 4312824	Cap	1

FOOTNOTES:

a → 8/2022
b 8/2022 ↔ 9/2022
c 9/2022 →

©2026 HYSTER COMPANY

NOTES

WIRE HARNESS (FIGURE 11-94)

CHASSIS (FULL OPTION) — DIESEL IDI - SINGLE SPEED TRANSMISSION (PAGE 1 OF 2) (→ 3/2024)

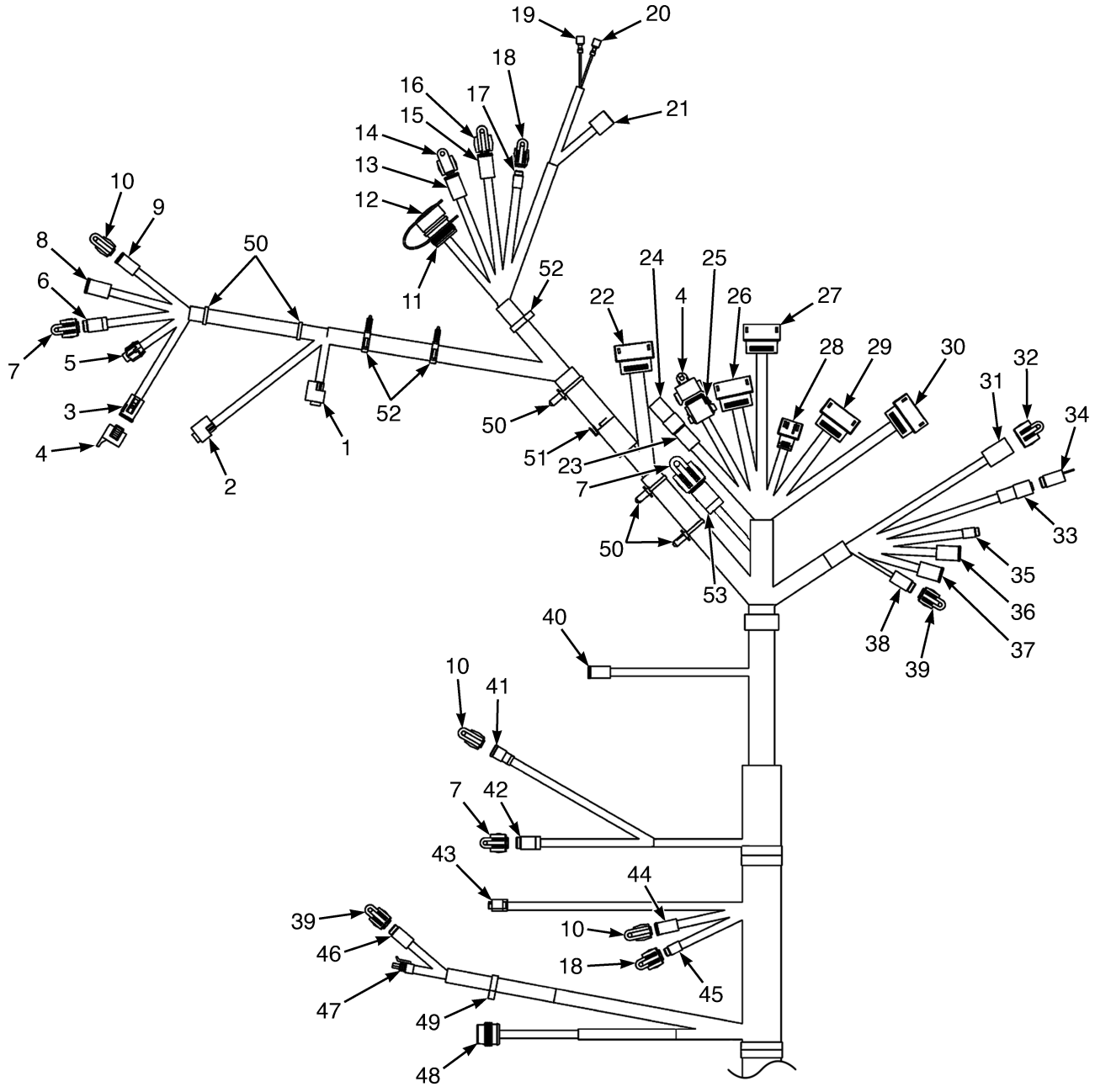

©2026 HYSTER COMPANY

WIRE HARNESS

CHASSIS (FULL OPTION) – DIESEL IDI - SINGLE SPEED TRANSMISSION (PAGE 1 OF 2) (→ 3/2024)

ITEM	PART NO.	DESCRIPTION	QTY
	a 4716881	Wire Harness (Chassis - Diesel IDI Transmission (Full Opt))	1
	b 4724417	Wire Harness (Chassis - Diesel IDI Transmission (Full Opt))	1
	c 4725040	Wire Harness (Chassis - Diesel IDI Transmission (Full Opt))	1
1	. . . . .	Connector Assembly (CPS225) Service Brake Pedal Position Sensor	1
1	1700460	Connector	1
1	1700461	Terminal	3
2	. . . . .	Connector Assembly (CPS171) Parking Brake Position Sensor	1
2	1700460	Connector	1
2	1700461	Terminal	3
3	. . . . .	Connector Assembly (CPS574) WBA Parking Brake Jumper	1
3	1525580	Connector	1
3	1502626	Connector (Secondary Lock)	1
3	1330438	Terminal (Socket)	8
4	4044070	Cap	2
5	. . . . .	Connector Assembly (CPS231) Brake Fluid Level Sensor	1
5	. . . . .	Connector	1
5	4707064	Connector Lock	1
5	4701730	Terminal	2
5	. . . . .	Seal	2
6	. . . . .	Connector Assembly (CPS324) Ambient Light Sensor	1
6	1493462	Connector (DTM PLU 3-Socket)	1
6	1493464	Connector (Secondary Lock)	1
6	1463139	Terminal	3
7	4312824	Cap	3
8	. . . . .	Connector Assembly (CPS541) Left Front Work Light Harness	1
8	1489656	Connector (4-Way)	1
8	1489657	Connector (Secondary Lock)	1
8	1330438	Terminal (Socket)	4
9	. . . . .	Connector Assembly (CPS570) Forward Spot Light Jumper	1
9	1490242	Connector (2 Way)	1
9	1490243	Connector (Secondary Lock)	1
9	1330438	Terminal (Socket)	2
10	4035905	Cap (DT 2-Way)	3
11	4338200	Protector (Boot)	1
11	. . . . .	Connector Assembly (CPS501) Diagnostic Interface	1
11	4220326	Connector (9-Pin)	1
11	4350103	Connector (Alternate Part)	1
11	1330437	Terminal (Pin)	5
11	1484377	Plug	4
12	4180124	Cap	1
12	4236767	Dust Cap (Alternate Part)	1
13	. . . . .	Connector Assembly (CPS590) CAN Switch	1
13	1489656	Connector (4-Way)	1
13	1489657	Connector (Secondary Lock)	1
13	1330438	Terminal (Socket)	4
14	4036523	Cap	1
15	. . . . .	Connector Assembly (CPS589) CAN Switch	1
15	1493430	Connector (6 Way Housing)	1
15	1529052	Connector (Secondary Lock)	1
15	1330438	Terminal (Socket)	4

©2026 HYSTER COMPANY

WIRE HARNESS

CHASSIS (FULL OPTION) – DIESEL IDI - SINGLE SPEED TRANSMISSION (PAGE 1 OF 2) (→ 3/2024)

ITEM	PART NO.	DESCRIPTION	QTY
15	1484377	Plug	2
16	4036873	Cap (6 Way)	1
17	. . . . .	Connector Assembly (CPS655) RTST Override Button	1
17	1484557	Connector (2 Socket)	1
17	1484558	Connector (Secondary Lock)	1
17	1463139	Terminal	2
18	4312823	Cap - DTM 2 Way	2
19	. . . . .	Connector Assembly (T234) Power Port (-)	1
19	1310142	Terminal	1
20	. . . . .	Connector Assembly (T233) Power Port (+)	1
20	1310142	Terminal	1
21	. . . . .	Connector Assembly (CPS232) USB Port	1
21	1484555	Connector Body (10-Way)	1
21	4178577	Terminal	2
22	. . . . .	Connector Assembly (CRS529) Column Harness	1
22	4135138	Connector (MX150, Keying Option A)	1
22	4137207	Terminal (Socket)	16
22	4331375	Plug	4
23	. . . . .	Connector Assembly (CPS397) Cab Harness	1
23	1493430	Connector (6 Way Housing)	1
23	1529052	Connector (Secondary Lock)	1
23	1330438	Terminal (Socket)	6
24	. . . . .	Connector Assembly (CRP397) Cab Jumper Cap	1
24	1525589	Connector (6-Pin)	1
24	1330417	Connector (Secondary Lock)	1
24	1330437	Terminal (Pin)	4
24	1484377	Plug	2
25	. . . . .	Connector Assembly (CPS534) E-Hydraulic Harness	1
25	4176575	Connector	1
25	1502626	Connector (Secondary Lock)	1
25	1330438	Terminal (Socket)	6
25	1484377	Plug	2
26	. . . . .	Connector Assembly (CRS4) VSM V4	1
26	4135140	Connector (MX150, Keying Option C)	1
26	4137207	Terminal (Socket)	18
26	4331375	Plug	2
27	. . . . .	Connector Assembly (CRS5) VSM V5	1
27	4135141	Connector (MX150, Keying Option D)	1
27	4137207	Terminal (Socket)	16
27	4331375	Plug	4
28	. . . . .	Connector Assembly (CRS1) VSM V1	1
28	4135136	Connector	1
28	4137207	Terminal (Socket)	6
28	4655880	Terminal (MX150, 14-16 AWG)	2
29	. . . . .	Connector Assembly (CRS2) VSM V2	1
29	4135138	Connector (MX150, Keying Option A)	1
29	4137207	Terminal (Socket)	18
29	4655880	Terminal (MX150, 14-16 AWG)	2
30	. . . . .	Connector Assembly (CRS3) VSM V3	1
30	4135139	Connector (MX150, Keying Option B)	1

See Service Manual for service procedures.
©2026 HYSTER COMPANY

WIRE HARNESS

CHASSIS (FULL OPTION) – DIESEL IDI - SINGLE SPEED TRANSMISSION (PAGE 1 OF 2) (→ 3/2024)

ITEM	PART NO.	DESCRIPTION	QTY
30	4137207	Terminal (Socket)	16
30	4331375	Plug	4
31	. . . . .	Connector Assembly (CPS221) Aux 12V Power Connector #1	1
31	1632865	Connector (DTP PLU 4 Socket)	1
31	1514603	Connector (Secondary Lock)	1
31	1554359	Terminal	4
32	4312827	Cap	1
33	. . . . .	Connector Assembly (CPS513) CAN Terminal 2	1
33	1530960	Connector (6-Pin)	1
33	1530961	Connector (Secondary Lock)	1
33	1484377	Plug	4
33	1463138	Terminal (Pin)	2
34	2091876	Resistor Assy (Termination Resistor)	1
35	. . . . .	Connector Assembly (CPS521) Display Harness	1
35	1484557	Connector (2 Socket)	1
35	1484558	Connector (Secondary Lock)	1
35	1463139	Terminal	2
36	. . . . .	Connector Assembly (CPS520) Display Harness	1
36	1493430	Connector (6 Way Housing)	1
36	1529052	Connector (Secondary Lock)	1
36	1330438	Terminal (Socket)	6
37	. . . . .	Connector Assembly (CPS540) Right Front Work Light Harness	1
37	1489656	Connector (4-Way)	1
37	1489657	Connector (Secondary Lock)	1
37	1330438	Terminal (Socket)	4
38	. . . . .	Connector Assembly (CPS575) To Card Reader Jumper	1
38	1463189	Connector	1
38	1463196	Connector (Secondary Lock, DTM PLU 4-Socket)	1
38	1463139	Terminal	4
39	4312825	Cap	2
40	. . . . .	Connector Assembly (CPS678) OPS Solenoid	1
40	1490242	Connector (2 Way)	1
40	1490243	Connector (Secondary Lock)	1
40	1330438	Terminal (Socket)	2
41	. . . . .	Connector Assembly (CPS1430) Engine Anti-Stall Solenoid	1
41	4168181	Connector	1
41	1490243	Connector (Secondary Lock)	1
41	1330438	Terminal (Socket)	2
42	. . . . .	Connector Assembly (CPS656) Tilt Spool Position	1
42	1493462	Connector (DTM PLU 3-Socket)	1
42	1493464	Connector (Secondary Lock)	1
42	1463139	Terminal	3
43	. . . . .	Connector Assembly (CPS637) Load Weigh Sensor	1
43	1525595	Connector	1
43	1525596	Terminal	3
43	~~1569975~~		
	1533810	Seal (Green)	3
44	. . . . .	Connector Assembly (CPS528) Hyd/VDP Temperature Sensor Jumper	1
44	1490242	Connector (2 Way)	1
44	1490243	Connector (Secondary Lock)	1

WIRE HARNESS

CHASSIS (FULL OPTION) – DIESEL IDI - SINGLE SPEED TRANSMISSION (PAGE 1 OF 2) (→ 3/2024)

ITEM	PART NO.	DESCRIPTION	QTY
44	1330438	Terminal (Socket)	2
45	. . . . .	Connector Assembly (CPS561) Tilt Proportion Valve Jumper	1
45	1484557	Connector (2 Socket)	1
45	1484558	Connector (Secondary Lock)	1
45	1463139	Terminal	2
46	. . . . .	Connector Assembly (CPS226) Acc Pedal Direction Select	1
46	1463189	Connector	1
46	1463196	Connector (Secondary Lock, DTM PLU 4-Socket)	1
46	1463139	Terminal	4
47	. . . . .	Connector Assembly (CPS227) Acc Pedal Position Sensor	1
47	1525584	Connector	1
47	4223854	Terminal	6
48	. . . . .	Connector Assembly (CPS289) Horn	1
48	1508211	Connector (4 Way)	1
48	1508232	Terminal (Pin)	4
48	2060555	Wire Seal (Yellow)	4
49	1509890	Clip	1
50	4140361	Cable Clip	5
51	4276772	Retainer	1
52	1608857	Clip	3
53	**c**	Connector Assembly (CPS691) M-Hyd Lever Harness	1
53	1493462	Connector (DTM PLU 3-Socket)	1
53	1493464	Connector (Secondary Lock)	1
53	1463139	Terminal	3

FOOTNOTES:

a → 8/2022
b 8/2022 ↔ 9/2022
c 9/2022 →

©2026 HYSTER COMPANY

NOTES

WIRE HARNESS (FIGURE 11-95)

CHASSIS (FULL OPTION) — DIESEL IDI - SINGLE SPEED TRANSMISSION (PAGE 2 OF 2) (→ 3/2024)

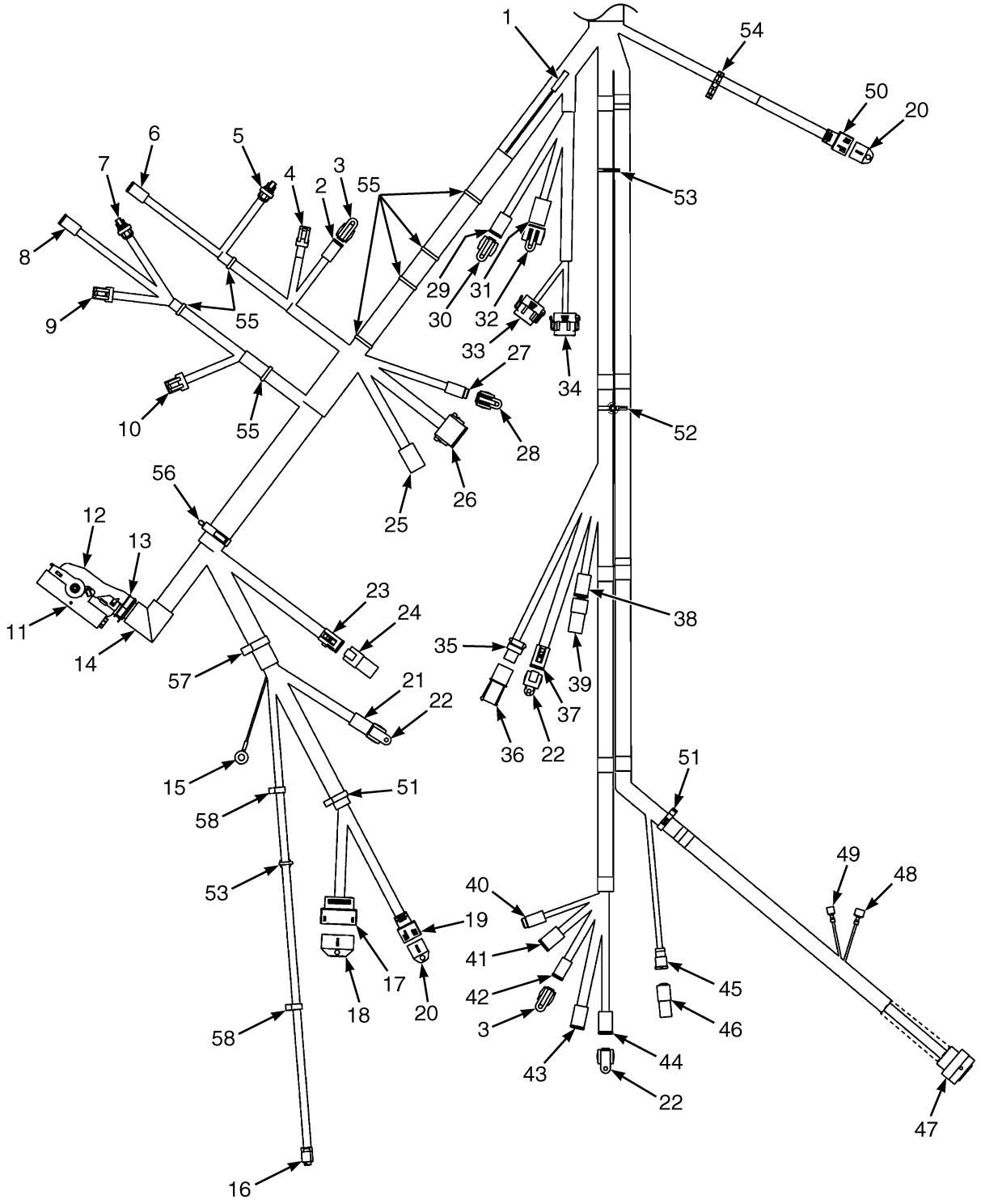

BP083652

©2026 HYSTER COMPANY

WIRE HARNESS

CHASSIS (FULL OPTION) – DIESEL IDI - SINGLE SPEED TRANSMISSION (PAGE 2 OF 2) (→ 3/2024)

ITEM	PART NO.	DESCRIPTION	QTY
	a 4716881	Wire Harness (Chassis - Diesel IDI Transmission (Full Opt))	1
	b 4724417	Wire Harness (Chassis - Diesel IDI Transmission (Full Opt))	1
	c 4725040	Wire Harness (Chassis - Diesel IDI Transmission (Full Opt))	1
1	. . . . .	Connector Assembly (T358) Heater	1
1	1324310	Terminal	1
1	1324309	Sleeve	1
2	. . . . .	Connector Assembly (CPS1419) Transmission Enable Valve	1
2	1490242	Connector (2 Way)	1
2	1490243	Connector (Secondary Lock)	1
2	1330438	Terminal (Socket)	2
3	4035905	Cap (DT 2-Way)	2
4	. . . . .	Connector Assembly (CPS1400) Transmission Temperature Sensor	1
4	1402868	Connector	1
4	4223854	Terminal	2
5	. . . . .	Connector Assembly (CRP1410) Forward Pressure Sensor	1
5	1603021	Connector	1
5	1603236	Connector (Secondary Lock)	1
5	4223853	Terminal	3
5	1548519	Seal	3
6	. . . . .	Connector Assembly (CPS1415) Proportional Valve (FWD)	1
6	1490242	Connector (2 Way)	1
6	1490243	Connector (Secondary Lock)	1
6	1330438	Terminal (Socket)	2
7	. . . . .	Connector Assembly (CRP1411) Reverse Pressure Sensor	1
7	1603021	Connector	1
7	1603236	Connector (Secondary Lock)	1
7	4223853	Terminal	3
7	1548519	Seal	3
8	. . . . .	Connector Assembly (CPS1416) Proportional Valve (REV)	1
8	1490242	Connector (2 Way)	1
8	1490243	Connector (Secondary Lock)	1
8	1330438	Terminal (Socket)	2
9	. . . . .	Connector Assembly (CPS1401) TISS Sensor	1
9	1546673	Connector (TISS)	1
9	4223854	Terminal	3
10	. . . . .	Connector Assembly (CPS1402) TOSS Sensor	1
10	1558156	Connector	1
10	4223854	Terminal	4
11	. . . . .	Connector Assembly (CRS52) Main PDM	1
11	4229521	Receptacle Housing	1
11	4177244	Terminal (Socket)	26
11	4229186	Terminal (Socket)	5
11	1502919	Plug (Junior Timer Blanking Seal)	7
11	4229187	Terminal	1
11	1562649	Seal	26
11	1479109	Seal	6
12	4228361	Connector (Backshell)	1
13	137852	Strap Clamp	1
14	4023934	Clip	1
15	. . . . .	Connector Assembly (T448) Static Ground	1

©2026 HYSTER COMPANY

WIRE HARNESS

CHASSIS (FULL OPTION) – DIESEL IDI - SINGLE SPEED TRANSMISSION (PAGE 2 OF 2) (→ 3/2024)

ITEM	PART NO.	DESCRIPTION	QTY
15	1402620	Ring Terminal	1
16	. . . . .	Connector Assembly (CPS230) Service Brake Pressure Sensor	1
16	1525595	Connector	1
16	1525596	Terminal	3
16	~~1569975~~		
	1533810	Seal (Green)	3
17	. . . . .	Connector Assembly (CRS12) iBox1 I2 (☞Figure 11-22, ☞Figure 11-21)	1
17	4135138	Connector (MX150, Keying Option A)	1
17	4137207	Terminal (Socket)	11
17	4331375	Plug	8
17	4655880	Terminal (MX150, 14-16 AWG)	1
18	4700067	Cap	1
19	. . . . .	Connector Assembly (CRS11) iBox1 I1 (☞Figure 11-22, ☞Figure 11-21)	1
19	4135137	Connector	1
19	4137207	Terminal (Socket)	5
19	4655880	Terminal (MX150, 14-16 AWG)	2
19	4331375	Plug	1
20	4700066	Cap	2
21	. . . . .	Connector Assembly (CPS535) Steer Axle Position Sensor Jumper	1
21	1489656	Connector (4-Way)	1
21	1489657	Connector (Secondary Lock)	1
21	1330438	Terminal (Socket)	4
22	4036523	Cap	3
23	. . . . .	Connector Assembly (CPS530) Mast Jumper Harness	1
23	1493428	Connector (12-Way)	1
23	1500913	Connector (Secondary Lock)	1
23	1330438	Terminal (Socket)	8
23	1484377	Plug	4
24	. . . . .	Connector Assembly (CRP530) Mast Jumper Cap	1
24	1531746	Electrical Connector	1
25	. . . . .	Connector Assembly (CPS511) Engine Harness Connector #2	1
25	1632865	Connector (DTP PLU 4 Socket)	1
25	1514603	Connector (Secondary Lock)	1
25	1493434	Terminal (Socket)	1
25	1330439	Plug Seal	1
25	1554359	Terminal	2
26	. . . . .	Connector Assembly (CPS510) Engine Harness Connector #1	1
26	1493428	Connector (12-Way)	1
26	1500913	Connector (Secondary Lock)	1
26	1330438	Terminal (Socket)	11
26	1484377	Plug	1
27	. . . . .	Connector Assembly (CPS587) Backup Alarm Jumper	1
27	1463189	Connector	1
27	1463196	Connector (Secondary Lock, DTM PLU 4-Socket)	1
27	1463139	Terminal	4
28	4312825	Cap	1
29	. . . . .	Connector Assembly (CPS700) Object Detection Interconnection	1
29	1493430	Connector (6 Way Housing)	1
29	1529052	Connector (Secondary Lock)	1
29	1330438	Terminal (Socket)	6

©2026 HYSTER COMPANY

WIRE HARNESS

CHASSIS (FULL OPTION) – DIESEL IDI - SINGLE SPEED TRANSMISSION (PAGE 2 OF 2) (→ 3/2024)

ITEM	PART NO.	DESCRIPTION	QTY
30	4036873	Cap (6 Way)	1
31	. . . . .	Connector Assembly (CPS220) Aux 12V Power Connector #2	1
31	1632865	Connector (DTP PLU 4 Socket)	1
31	1514603	Connector (Secondary Lock)	1
31	1554359	Terminal	4
32	4312827	Cap	1
33	. . . . .	Connector Assembly (CPS506) VAM 2	1
33	1525568	Connector (STM PLU 12-Socket)	1
33	1529046	Connector (Secondary Lock)	1
33	1484377	Plug	8
33	1463139	Terminal	4
34	. . . . .	Connector Assembly (CPS505) VAM 1	1
34	1525567	Connector (DTM PLU 12-Socket)	1
34	1529046	Connector (Secondary Lock)	1
34	1463139	Terminal	5
34	1484377	Plug	7
35	. . . . .	Connector Assembly (CPS671) Hydraulic Filter Switch	1
35	1329152	Plug	1
35	1329151	Secondary Lock	1
35	1330281	Terminal	2
35	1402888	Seal (Purple)	2
36	. . . . .	Connector Assembly (CRP671) Hydraulic Filter Cap	1
36	1329150	Connector	1
36	1329151	Secondary Lock	1
36	1327164	Terminator	2
37	. . . . .	Connector Assembly (CPS433) Battery Contactor Control	1
37	1489656	Connector (4-Way)	1
37	1489657	Connector (Secondary Lock)	1
37	1330438	Terminal (Socket)	4
38	. . . . .	Connector Assembly (CPS504) CAN Terminal 4	1
38	1489656	Connector (4-Way)	1
38	1489657	Connector (Secondary Lock)	1
38	1484377	Plug	2
38	1330438	Terminal (Socket)	2
39	1525577	Connector (With Resistor)	1
40	. . . . .	Connector Assembly (CPS544) Rear OHG Harness	1
40	1463189	Connector	1
40	1463196	Connector (Secondary Lock, DTM PLU 4-Socket)	1
40	1484377	Plug	2
40	1463139	Terminal	2
41	. . . . .	Connector Assembly (CPS542) Rear OHG Harness	1
41	1489656	Connector (4-Way)	1
41	1489657	Connector (Secondary Lock)	1
41	1330438	Terminal (Socket)	4
42	. . . . .	Connector Assembly (CPS279) OHG Horn Button	1
42	1490242	Connector (2 Way)	1
42	1490243	Connector (Secondary Lock)	1
42	1330438	Terminal (Socket)	2
43	. . . . .	Connector Assembly (CPS543) Rear OHG Harness	1
43	1330422	Connector (DT PLU 6-Socket)	1

WIRE HARNESS

CHASSIS (FULL OPTION) – DIESEL IDI - SINGLE SPEED TRANSMISSION (PAGE 2 OF 2) (→ 3/2024)

ITEM	PART NO.	DESCRIPTION	QTY
43	1330428	Connector (Secondary Lock)	1
43	1330438	Terminal (Socket)	5
43	1330439	Plug Seal	1
44	. . . . .	Connector Assembly (CPS571) Pedestrian Awareness Light Jumper	1
44	4167341	Connector	1
44	1489657	Connector (Secondary Lock)	1
44	1330438	Terminal (Socket)	4
45	. . . . .	Connector Assembly (CPS403) Remote Keyswitch	1
45	4168181	Connector	1
45	1490243	Connector (Secondary Lock)	1
45	1330438	Terminal (Socket)	2
46	. . . . .	Connector Assembly (CRP403) Remote Keyswitch Jumper	1
46	1493465	Connector (2 Pin)	1
46	1330414	Connector (Secondary Lock)	1
46	1330437	Terminal (Pin)	2
47	. . . . .	Connector Assembly (CPS531) Seat Harness	1
47	4176926	Connector	1
47	1463139	Terminal	15
47	1330438	Terminal (Socket)	2
47	1484377	Plug	3
48	. . . . .	Connector Assembly (TM551) Seat Compressor Power (-)	1
48	1310143	Terminal (Male)	1
49	. . . . .	Connector Assembly (TF550) Seat Compressor Power (+)	1
49	1310142	Terminal	1
50	. . . . .	Connector Assembly (CRS13) iBox2 I1 (☞Figure 11-22, ☞Figure 11-21)	1
50	4135137	Connector	1
50	4137207	Terminal (Socket)	5
50	4655880	Terminal (MX150, 14-16 AWG)	2
50	4331375	Plug	1
51	1608857	Clip	2
52	1616343	Strap Clamp	1
53	4280606	Retainer (Cable Tie Clip)	2
54	1646457	Clip	1
55	4140361	Cable Clip	7
56	1540944	Clip	1
57	1509889	Clip	1
58	1509888	Clip (Conduit)	2

FOOTNOTES:

a → 8/2022
b 8/2022 ↔ 9/2022
c 9/2022 →

©2026 HYSTER COMPANY

NOTES

WIRE HARNESS (FIGURE 11-96)

CHASSIS (DIESEL IDI - SINGLE SPEED TRANSMISSION) — PAGE 1 OF 3 (3/2024 →)

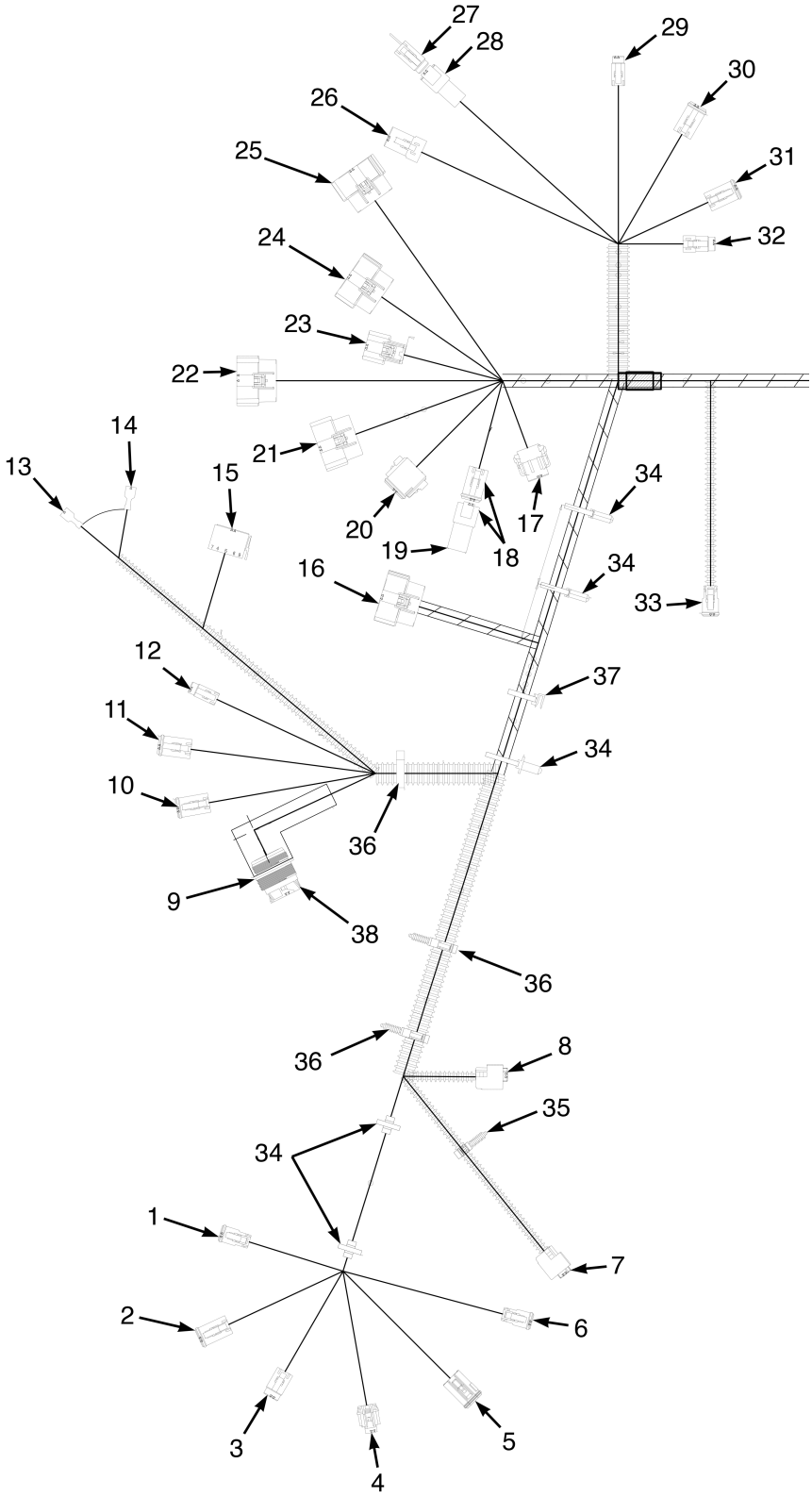

©2026 HYSTER COMPANY

WIRE HARNESS

CHASSIS (DIESEL IDI - SINGLE SPEED TRANSMISSION) – PAGE 1 OF 3 (3/2024 →)

KEY:
A: Base Opt
B: Full Opt

ITEM	PART NO.	DESCRIPTION	QTY A	QTY B
	4731488	Wire Harness (Chassis - Dsl - IDI - Base Opt)	1	..
	4731487	Wire Harness (Chassis - Dsl - IDI - Full Opt)	..	1
1	. . . . .	Connector Assembly (CPS570) Forward Spot Light Jumper	..	1
1	1490242	Connector (2 Way)	..	1
1	1490243	Connector (Secondary Lock)	..	1
2	. . . . .	Connector Assembly (CPS541) Left Front Work Light Harness	1	1
2	1489656	Connector (4-Way)	1	1
2	1489657	Connector (Secondary Lock)	1	1
2	1330438	Terminal (Socket)	4	4
3	. . . . .	Connector Assembly (CPS324) Ambient Light Sensor	..	1
3	1493462	Connector (DTM PLU 3-Socket)	..	1
3	1493464	Connector (Secondary Lock)	..	1
3	1463139	Terminal	..	3
4	. . . . .	Connector Assembly (CPS231) Brake Fluid Level Sensor	1	1
4	4722912	Connector	1	1
4	4707064	Connector Lock	1	1
4	4701730	Terminal	2	2
5	. . . . .	Connector Assembly (CPS574) Wet Brake Park Brake Jumper	..	1
5	1525580	Connector	..	1
5	1502626	Connector (Secondary Lock)	..	1
5	1330438	Terminal (Socket)	..	8
6	**a** 4321306	Connector (Jumper Cap)	1	1
6	. . . . .	Connector Assembly (CPS410) To Q-Current Switch	1	1
6	1490242	Connector (2 Way)	1	1
6	1490243	Connector (Secondary Lock)	1	1
6	1330438	Terminal (Socket)	2	2
7	. . . . .	Connector Assembly (CPS171) Park Brake Position Sensor	1	1
7	1700460	Connector	1	1
7	1700461	Terminal	3	3
8	. . . . .	Connector Assembly (CPS225) Service Brake Pedal Position Sensor	1	1
8	1700460	Connector	1	1
8	1700461	Terminal	3	3
9	. . . . .	Connector Assembly (CPS501)	1	1
9	4350103	Connector	1	1
9	1330437	Terminal (Pin)	5	5
9	1484377	Plug	4	4
10	. . . . .	Connector Assembly (CPS590) CAN Switch	..	1
10	1489656	Connector (4-Way)	..	1
10	1489657	Connector (Secondary Lock)	..	1
10	1330438	Terminal (Socket)	..	4
11	. . . . .	Connector Assembly (CPS589) CAN Switch	..	1
11	1493430	Connector (6 Way Housing)	..	1
11	1529052	Connector (Secondary Lock)	..	1
11	1330438	Terminal (Socket)	..	4
11	1484377	Plug	..	2

WIRE HARNESS

CHASSIS (DIESEL IDI - SINGLE SPEED TRANSMISSION) – PAGE 1 OF 3 (3/2024 →)

KEY:
A: Base Opt
B: Full Opt

ITEM	PART NO.	DESCRIPTION	QTY A	QTY B
12	. . . . .	Connector Assembly (CPS655) RTST Override Button	..	1
12	1484557	Connector (2 Socket)	..	1
12	1484558	Connector (Secondary Lock)	..	1
12	1463139	Terminal	..	2
13	. . . . .	Connector Assembly (T234) Power Port (-)	1	1
13	1310142	Terminal	1	1
14	. . . . .	Connector Assembly (T233) Power Port (+)	1	1
14	1310142	Terminal	1	1
15	. . . . .	Connector Assembly (CPS232) USB Port	..	1
15	1484555	Connector Body (10-Way)	..	1
15	4178577	Terminal	..	2
15	. . . . .	Connector Assembly (CRS320) Work Light Switch	1	..
15	1484555	Connector Body (10-Way)	1	..
15	4178577	Terminal	4	..
16	. . . . .	Connector Assembly (CRS529) Column Harness	1	1
16	4135138	Connector (MX150, Keying Option A)	1	1
16	4137207	Terminal (Socket)	16	16
16	4331375	Plug	4	4
17	. . . . .	Connector Assembly (CPS691) M-Hy Lever	1	1
17	1541991	Connector (DTM PLU 8-Socket)	1	1
17	1541992	Connector (Secondary Lock)	1	1
17	1463139	Terminal	8	8
18	. . . . .	Connector Assembly (CPS397) Can Harness	..	1
18	1493430	Connector (6 Way Housing)	..	1
18	1529052	Connector (Secondary Lock)	..	1
18	1330438	Terminal (Socket)	..	6
19	. . . . .	Connector Assembly (CRP397) Cab Jumper Cap	..	1
19	1525589	Connector (6-Pin)	..	1
19	1330417	Connector (Secondary Lock)	..	1
19	1330437	Terminal (Pin)	..	4
19	1484377	Plug	..	2
20	. . . . .	Connector Assembly (CPS534) E-Hyd Harness	..	1
20	4176575	Connector	..	1
20	1502626	Connector (Secondary Lock)	..	1
20	1330438	Terminal (Socket)	..	6
20	1484377	Plug	..	2
21	. . . . .	Connector Assembly (CRS4) VSM 4	1	1
21	4135140	Connector (MX150, Keying Option C)	1	1
21	4137207	Terminal (Socket)	18	18
21	4331375	Plug	2	2
22	. . . . .	Connector Assembly (CRS5) VSM 5	1	1
22	4135141	Connector (MX150, Keying Option D)	1	1
22	4137207	Terminal (Socket)	16	16
22	4331375	Plug	4	4
23	. . . . .	Connector Assembly (CRS1) VSM 1	1	1

See Service Manual for service procedures.
©2026 HYSTER COMPANY

WIRE HARNESS

CHASSIS (DIESEL IDI - SINGLE SPEED TRANSMISSION) – PAGE 1 OF 3 (3/2024 →)

KEY:
A: Base Opt
B: Full Opt

ITEM	PART NO.	DESCRIPTION	QTY A	QTY B
23	4135136	Connector	1	1
23	4137207	Terminal (Socket)	6	6
23	4655880	Terminal (MX150, 14-16 AWG)	2	2
24	. . . . .	Connector Assembly (CRS2) VSM 2	1	1
24	4135138	Connector (MX150, Keying Option A)	1	1
24	4137207	Terminal (Socket)	18	18
24	4655880	Terminal (MX150, 14-16 AWG)	2	2
25	. . . . .	Connector Assembly (CRS3) VSM 3	1	1
25	4135139	Connector (MX150, Keying Option B)	1	1
25	4137207	Terminal (Socket)	17	17
25	4331375	Plug	3	3
26	. . . . .	Connector Assembly (CPS221) Aux 12v Power Connector 1	1	1
26	1632865	Connector (DTP PLU 4 Socket)	1	1
26	1514603	Connector (Secondary Lock)	1	1
26	1554359	Terminal	4	4
27	2091876	Resistor Assy (Termination Resistor)	..	1
28	. . . . .	Connector Assembly (CPS513)	..	1
28	1530960	Connector (6-Pin)	..	1
28	1530961	Connector (Secondary Lock)	..	1
28	1463138	Terminal (Pin)	2	2
28	1484377	Plug	4	4
29	. . . . .	Connector Assembly (CPS521) Display Harness	1	1
29	1484557	Connector (2 Socket)	1	1
29	1484558	Connector (Secondary Lock)	1	1
29	1463139	Terminal	2	2
30	. . . . .	Connector Assembly (CPS520) Display Harness	1	1
30	1493430	Connector (6 Way Housing)	1	1
30	1529052	Connector (Secondary Lock)	1	1
30	1330438	Terminal (Socket)	4	4
30	1484377	Plug	2	2
31	. . . . .	Connector Assembly (CPS540) Right Front Work Light Harness	1	1
31	1489656	Connector (4-Way)	1	1
31	1489657	Connector (Secondary Lock)	1	1
31	1330438	Terminal (Socket)	4	4
32	. . . . .	Connector Assembly (CPS575) To Card Reader Jumper	..	1
32	1463189	Connector	..	1
32	1463196	Connector (Secondary Lock, DTM PLU 4-Socket)	..	1
32	1463139	Terminal	..	4
33	. . . . .	Connector Assembly (CPS678) OPS Solenoid	1	1
33	1490242	Connector (2 Way)	1	1
33	1490243	Connector (Secondary Lock)	1	1
33	1330438	Terminal (Socket)	2	2
34	4140361	Cable Clip	14	13
35	1509888	Clip (Conduit)	3	3
36	1608857	Clip	..	5

©2026 HYSTER COMPANY

WIRE HARNESS

CHASSIS (DIESEL IDI - SINGLE SPEED TRANSMISSION) – PAGE 1 OF 3 (3/2024 →)

KEY:
A: Base Opt
B: Full Opt

ITEM	PART NO.	DESCRIPTION	QTY A	QTY B
36	1509890	Clip	4	..
37	4276772	Retainer	1	1
38	4236767	Dust Cap	1	1

FOOTNOTES:

a If CPS410 is installed and without Q-Switch or E-Box then this jumper cap needs to be installed.

©2026 HYSTER COMPANY

NOTES

WIRE HARNESS (FIGURE 11-97)

CHASSIS (DIESEL IDI - SINGLE SPEED TRANSMISSION) — PAGE 2 OF 3 (3/2024 →)

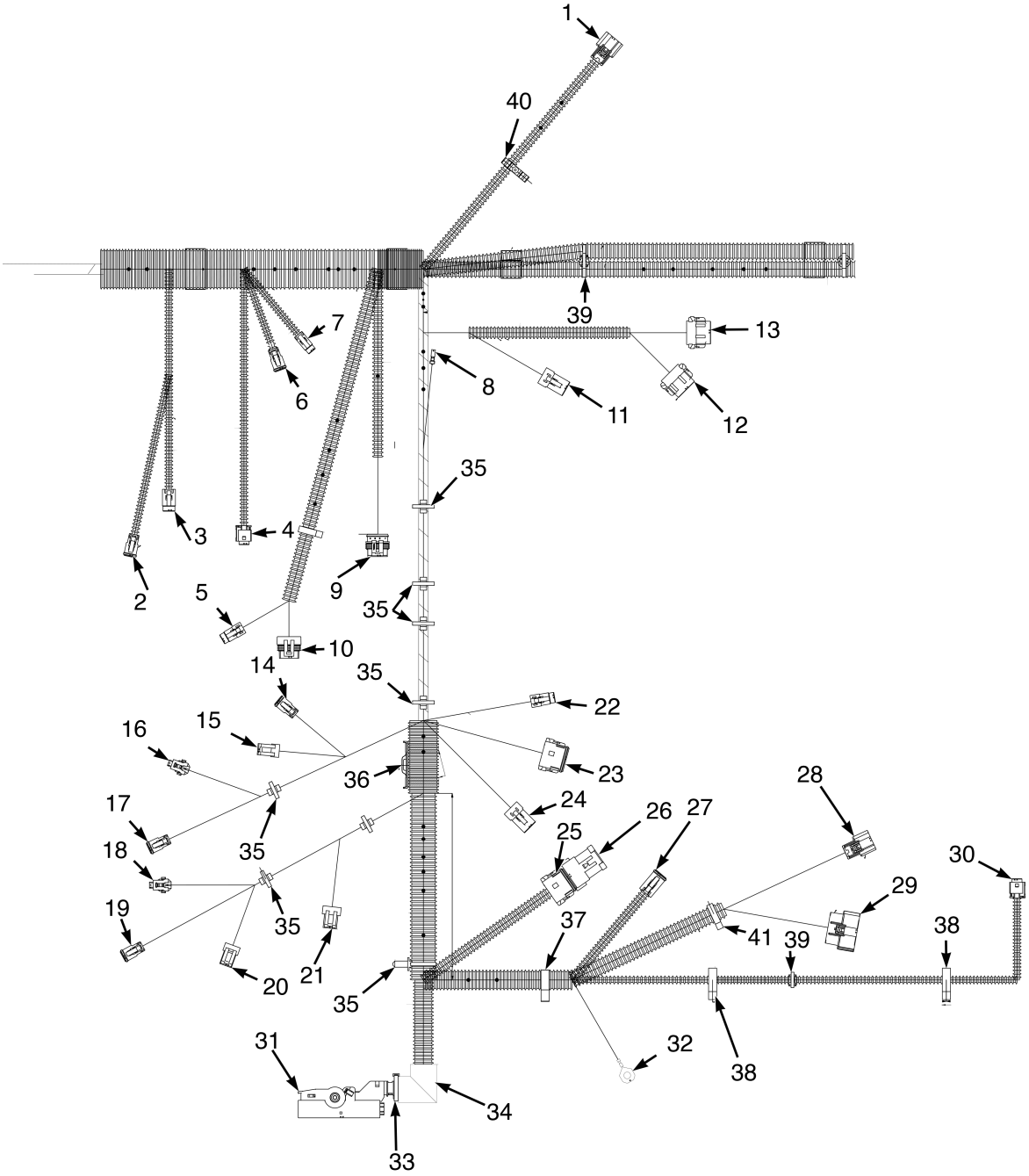

BP084620

©2026 HYSTER COMPANY

WIRE HARNESS

CHASSIS (DIESEL IDI - SINGLE SPEED TRANSMISSION) – PAGE 2 OF 3 (3/2024 →)

KEY:
A: Base Opt
B: Full Opt

ITEM	PART NO.	DESCRIPTION	QTY A	QTY B
	4731488	Wire Harness (Chassis - Dsl - IDI - Base Opt)	1	..
	4731487	Wire Harness (Chassis - Dsl - IDI - Full Opt)	..	1
1	. . . . .	Connector Assembly (CRS13) iBox 2 I1 (☞Figure 11-22, ☞Figure 11-21)	..	1
1	4135137	Connector	..	1
1	4137207	Terminal (Socket)	..	5
1	4655880	Terminal (MX150, 14-16 AWG)	..	2
1	4331375	Plug	..	1
2	. . . . .	Connector Assembly (CPS1430) Engine Anti-Stall Solenoid	1	1
2	4168181	Connector	1	1
2	1490243	Connector (Secondary Lock)	1	1
2	1330438	Terminal (Socket)	2	2
3	. . . . .	Connector Assembly CPS656) Tilt Spool	..	1
3	1493462	Connector (DTM PLU 3-Socket)	..	1
3	1493464	Connector (Secondary Lock)	..	1
3	1463139	Terminal	..	3
4	. . . . .	Connector Assembly CPS637) Load Weigh Sensor	..	1
4	1525595	Connector	..	1
4	1525596	Terminal	..	3
5	. . . . .	Connector Assembly (CPS226) Accelerator Pedal Direction Select	1	1
5	1463189	Connector	1	1
5	1463196	Connector (Secondary Lock, DTM PLU 4-Socket)	1	1
5	1463139	Terminal	4	4
6	. . . . .	Connector Assembly (CPS528) Hyd/VDP Temp Sensor Jumper	..	1
6	1490242	Connector (2 Way)	..	1
6	1490243	Connector (Secondary Lock)	..	1
6	1330438	Terminal (Socket)	..	2
7	. . . . .	Connector Assembly (CPS561) Tilt Proportion Valve Jumper	..	1
7	1484557	Connector (2 Socket)	..	1
7	1484558	Connector (Secondary Lock)	..	1
7	1463139	Terminal	..	2
8	. . . . .	Connector Assembly (T358) Heater	..	1
8	1324310	Terminal	..	1
9	. . . . .	Connector Assembly (CPS289) Horn	1	1
9	1508211	Connector (4 Way)	1	1
9	1508232	Terminal (Pin)	4	4
10	. . . . .	Connector Assembly (CPS227) Accelerator Pedal Sensor	1	1
10	1525584	Connector	1	1
10	4223854	Terminal	6	6
11	. . . . .	Connector Assembly (CPS220) Aux 12v Power Connector 2	..	1
11	1632865	Connector (DTP PLU 4 Socket)	..	1
11	1514603	Connector (Secondary Lock)	..	1
11	1554359	Terminal	..	4
12	. . . . .	Connector Assembly (CPS506) VAM 2	..	1
12	1525568	Connector (STM PLU 12-Socket)	..	1

WIRE HARNESS

CHASSIS (DIESEL IDI - SINGLE SPEED TRANSMISSION) – PAGE 2 OF 3 (3/2024 →)

KEY:
A: Base Opt
B: Full Opt

ITEM	PART NO.	DESCRIPTION	QTY A	QTY B
12	1529046	Connector (Secondary Lock)	..	1
12	1484377	Plug	..	8
12	1463139	Terminal	..	4
13	. . . . .	Connector Assembly (CPS505) VAM 1	..	1
13	1525567	Connector (DTM PLU 12-Socket)	..	1
13	1529046	Connector (Secondary Lock)	..	1
13	1463139	Terminal	..	5
13	1484377	Plug	..	7
14	. . . . .	Connector Assembly (CPS1419) Transmission Enable Valve	..	1
14	1490242	Connector (2 Way)	..	1
14	1490243	Connector (Secondary Lock)	..	1
14	1330438	Terminal (Socket)	..	2
15	. . . . .	Connector Assembly (CPS1400) Transmission Temp Sensor	..	1
15	1402868	Connector	..	1
15	4223854	Terminal	..	2
16	. . . . .	Connector Assembly (CRP1410) Forward Pressure Sensor	1	1
16	1603021	Connector	1	1
16	1603236	Connector (Secondary Lock)	1	1
16	4223853	Terminal	3	3
17	. . . . .	Connector Assembly CPS1415) Proportional Valve (Fwd)	1	1
17	1490242	Connector (2 Way)	1	1
17	1490243	Connector (Secondary Lock)	1	1
17	1330438	Terminal (Socket)	2	2
18	. . . . .	Connector Assembly (CRP1411) Reverse Pressure Sensor	..	1
18	1603021	Connector	..	1
18	1603236	Connector (Secondary Lock)	..	1
18	4223853	Terminal	..	3
19	. . . . .	Connector Assembly (CPS1416) Proportional Valve (Rev)	1	1
19	1490242	Connector (2 Way)	1	1
19	1490243	Connector (Secondary Lock)	1	1
19	1330438	Terminal (Socket)	2	2
20	. . . . .	Connector Assembly (CPS1401) TISS Sensor	..	1
20	1546673	Connector (TISS)	..	1
20	4223854	Terminal	..	3
21	. . . . .	Connector Assembly CPS1402) TOSS Sensor	..	1
21	1558156	Connector	..	1
21	4223854	Terminal	..	4
21	. . . . .	Connector Assembly (CRS1403) TOSS Sensor	1	..
21	1546673	Connector (TISS)	1	..
21	4223854	Terminal	3	..
22	. . . . .	Connector Assembly (CPS587) Backup Alarm Jumper	1	1
22	1463189	Connector	1	1
22	1463196	Connector (Secondary Lock, DTM PLU 4-Socket)	1	1
22	1463139	Terminal	4	4
23	. . . . .	Connector Assembly (CPS510) Engine Harness Connector 1	1	1

See Service Manual for service procedures.
©2026 HYSTER COMPANY

WIRE HARNESS

CHASSIS (DIESEL IDI - SINGLE SPEED TRANSMISSION) – PAGE 2 OF 3 (3/2024 →)

KEY:
A: Base Opt
B: Full Opt

ITEM	PART NO.	DESCRIPTION	QTY A	QTY B
23	1493428	Connector (12-Way)	1	1
23	1500913	Connector (Secondary Lock)	1	1
23	1330438	Terminal (Socket)	11	11
23	1484377	Plug	1	1
24	. . . . .	Connector Assembly CPS511) Engine Harness Connector 2	1	1
24	1632865	Connector (DTP PLU 4 Socket)	1	1
24	1514603	Connector (Secondary Lock)	1	1
24	1493434	Terminal (Socket)	1	1
24	1554359	Terminal	2	2
24	1330439	Plug Seal	1	1
25	. . . . .	Connector Assembly (CPS530) Mast Jumper Harness	..	1
25	1493428	Connector (12-Way)	..	1
25	1500913	Connector (Secondary Lock)	..	1
25	1330438	Terminal (Socket)	..	8
25	1484377	Plug	..	4
26	. . . . .	Connector Assembly (CRP530) Mast Jumper Cap	..	1
26	1531746	Electrical Connector	..	1
27	. . . . .	Connector Assembly CPS535) Steer Axle Position Sensor Jumper	1	1
27	1489656	Connector (4-Way)	1	1
27	1489657	Connector (Secondary Lock)	1	1
27	1330438	Terminal (Socket)	4	4
28	. . . . .	Connector Assembly (CRS11) iBox 1 I1 (☞Figure 11-22, ☞Figure 11-21)	..	1
28	4135137	Connector	..	1
28	4137207	Terminal (Socket)	..	5
28	4655880	Terminal (MX150, 14-16 AWG)	..	2
28	4331375	Plug	..	1
29	. . . . .	Connector Assembly (CRS12) iBox 1 I2 (☞Figure 11-22, ☞Figure 11-21)	..	1
29	4135138	Connector (MX150, Keying Option A)	..	1
29	4137207	Terminal (Socket)	..	14
29	4655880	Terminal (MX150, 14-16 AWG)	..	1
29	4331375	Plug	..	5
30	. . . . .	Connector Assembly CPS230) Service Brake Pressure Sensor	1	1
30	1525595	Connector	1	1
30	1525596	Terminal	3	3
31	. . . . .	Connector Assembly (CRS52) Main PDM	1	1
31	4229521	Receptacle Housing	1	1
31	4177244	Terminal (Socket)	21	21
31	4229186	Terminal (Socket)	5	5
31	1502919	Plug (Junior Timer Blanking Seal)	8	8
31	4229187	Terminal	1	1
32	. . . . .	Connector Assembly (T448) Static Ground	1	1
32	1402620	Ring Terminal	1	1
33	137852	Strap Clamp	1	1

©2026 HYSTER COMPANY

WIRE HARNESS

CHASSIS (DIESEL IDI - SINGLE SPEED TRANSMISSION) – PAGE 2 OF 3 (3/2024 →)

KEY:
A: Base Opt
B: Full Opt

ITEM	PART NO.	DESCRIPTION	QTY A	QTY B
34	4023934	Clip	1	1
35	4140361	Cable Clip	14	13
36	. . . . .	Clip, Grip Tie 4732100	1	1
37	1509889	Clip	..	1
37	1500901	Clip (Conduit)	1	..
38	1509888	Clip (Conduit)	3	3
39	4280606	Retainer (Cable Tie Clip)	2	2
40	1646457	Clip	..	1
41	1608857	Clip	..	5

See Service Manual for service procedures.
©2026 HYSTER COMPANY

NOTES

WIRE HARNESS (FIGURE 11-98)

CHASSIS (DIESEL IDI - SINGLE SPEED TRANSMISSION) — PAGE 3 OF 3 (3/2024 →)

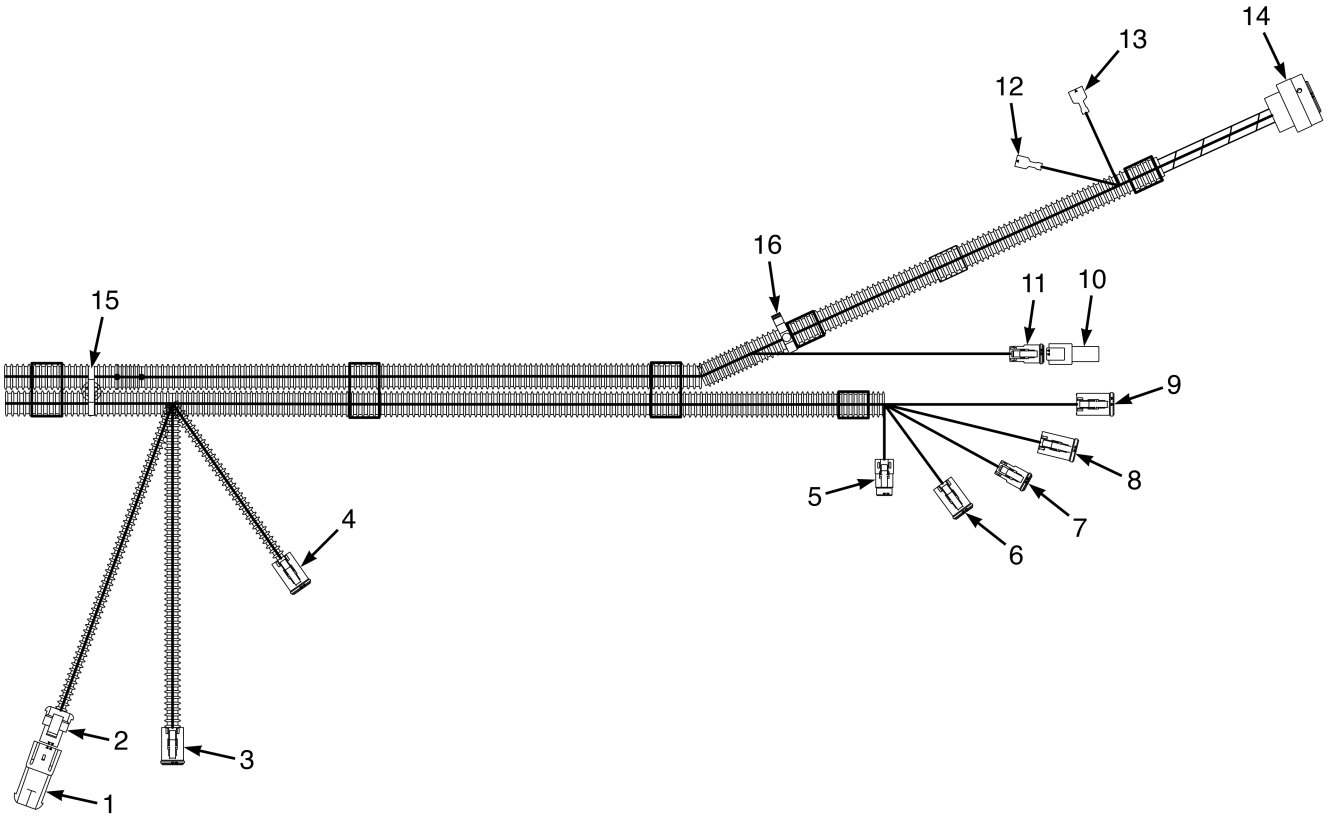

BP084621

©2026 HYSTER COMPANY

WIRE HARNESS

CHASSIS (DIESEL IDI - SINGLE SPEED TRANSMISSION) – PAGE 3 OF 3 (3/2024 →)

KEY:
A: Base Opt
B: Full Opt

ITEM	PART NO.	DESCRIPTION	QTY A	QTY B
	4731488	Wire Harness (Chassis - Dsl - IDI - Base Opt)	1	..
	4731487	Wire Harness (Chassis - Dsl - IDI - Full Opt)	..	1
1	. . . . .	Connector Assembly (CRP671) Hyd Filter Cap	..	1
1	1329150	Connector	..	1
1	1329151	Secondary Lock	..	1
1	1327164	Terminator	..	2
2	. . . . .	Connector Assembly (CPS671) Hyd Filter Switch	..	1
2	1329152	Plug	..	1
2	1329151	Secondary Lock	..	1
2	1330281	Terminal	..	2
3	. . . . .	Connector Assembly (CPS433) Battery Contactor Control	..	1
3	1489656	Connector (4-Way)	..	1
3	1489657	Connector (Secondary Lock)	..	1
3	1330438	Terminal (Socket)	..	4
4	. . . . .	Connector Assembly (CPS504) CAN Terminal 4	1	1
4	1489656	Connector (4-Way)	1	1
4	1489657	Connector (Secondary Lock)	1	1
4	1330438	Terminal (Socket)	2	2
4	1484377	Plug	2	2
5	. . . . .	Connector Assembly (CPS544) Rear OHG Harness	..	1
5	1463189	Connector	..	1
5	1463196	Connector (Secondary Lock, DTM PLU 4-Socket)	..	1
5	1463139	Terminal	..	2
5	1484377	Plug	..	2
6	. . . . .	Connector Assembly (CPS542) Rear OHG Harness	1	1
6	1489656	Connector (4-Way)	1	1
6	1489657	Connector (Secondary Lock)	1	1
6	1330438	Terminal (Socket)	4	4
7	. . . . .	Connector Assembly (CPS279) OHG Horn Button	1	1
7	1490242	Connector (2 Way)	1	1
7	1490243	Connector (Secondary Lock)	1	1
7	1330438	Terminal (Socket)	2	2
8	. . . . .	Connector Assembly (CPS543) Rear OHG Harness	1	1
8	1330422	Connector (DT PLU 6-Socket)	1	1
8	1330428	Connector (Secondary Lock)	1	1
8	1330438	Terminal (Socket)	5	5
8	1330439	Plug Seal	1	1
9	. . . . .	Connector Assembly (CPS571) Pedestrian Awareness Light Jumper	..	1
9	4167341	Connector	..	1
9	1489657	Connector (Secondary Lock)	..	1
9	1330438	Terminal (Socket)	..	4
10	. . . . .	Connector Assembly (CRP403) Remote Keyswitch Jumper	..	1
10	1493465	Connector (2 Pin)	..	1
10	1330414	Connector (Secondary Lock)	..	1
10	1330437	Terminal (Pin)	..	2

©2026 HYSTER COMPANY

WIRE HARNESS

CHASSIS (DIESEL IDI - SINGLE SPEED TRANSMISSION) – PAGE 3 OF 3 (3/2024 →)

KEY:
A: Base Opt
B: Full Opt

ITEM	PART NO.	DESCRIPTION	QTY A	QTY B
11	. . . . .	Connector Assembly (CPS403) Remote Keyswitch	..	1
11	4168181	Connector	..	1
11	1490243	Connector (Secondary Lock)	..	1
11	1330438	Terminal (Socket)	..	2
12	. . . . .	Connector Assembly (TF550) Seat Compressor Power (+)	..	1
12	1310142	Terminal	..	1
13	. . . . .	Connector Assembly (TM551) Seat Compressor Power (-)	..	1
13	1310143	Terminal (Male)	..	1
14	. . . . .	Connector Assembly (CPS531) Seat Harness	1	1
14	4176926	Connector	1	1
14	1463139	Terminal	15	15
14	1330438	Terminal (Socket)	2	2
14	1484377	Plug	3	3
15	1616343	Strap Clamp	1	1
16	4140361	Cable Clip	1	..
16	1608857	Clip	..	5

See Service Manual for service procedures.
©2026 HYSTER COMPANY

NOTES

WIRE HARNESS (FIGURE 11-99)

CHASSIS (FULL OPTION) — HYDROSTATIC TRANSMISSION (PAGE 1 OF 2) (→ 2/2024)

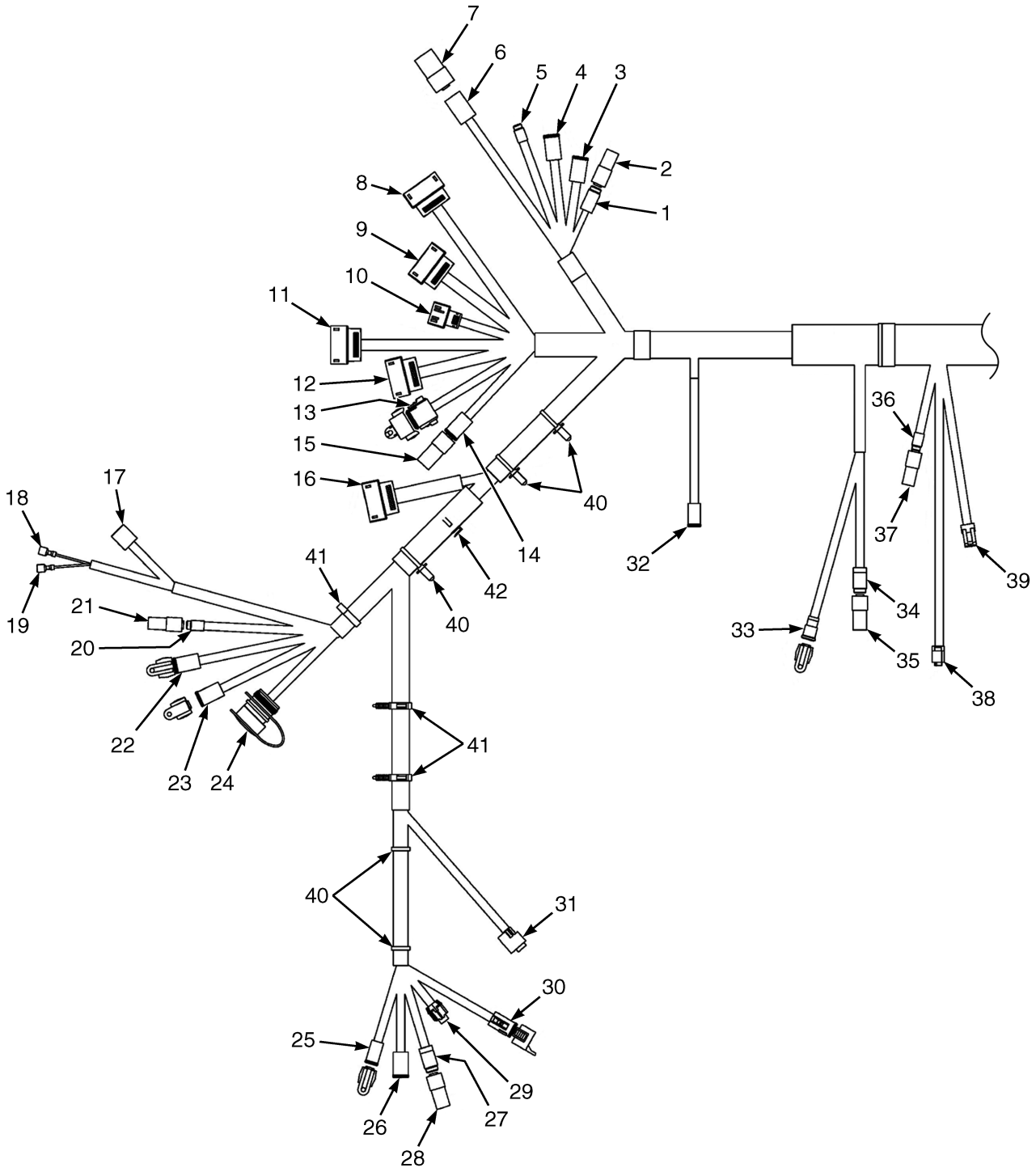

©2026 HYSTER COMPANY

WIRE HARNESS

CHASSIS (FULL OPTION) – HYDROSTATIC TRANSMISSION (PAGE 1 OF 2) (→ 2/2024)

ITEM	PART NO.	DESCRIPTION	QTY
	4710131	Wire Harness (Chassis - Hydrostatic Transmission (Full Opt))	1
1	. . . . .	Connector Assembly (CPS575) To Card Reader Jumper	1
1	1463189	Connector	1
1	1463196	Connector (Secondary Lock, DTM PLU 4-Socket)	1
1	1463139	Terminal	3
1	1484377	Plug	1
2	. . . . .	Cap Assembly (CRP575) Card Reader Jumper Cap	1
2	~~4170087~~		
	1463184	Connector Housing	1
2	~~4046140~~		
	1463193	Connector	1
2	1484377	Plug	4
3	. . . . .	Connector Assembly (CPS540) Right Front Work Light Harness	1
3	1489656	Connector (4-Way)	1
3	1489657	Connector (Secondary Lock)	1
3	1330438	Terminal (Socket)	4
4	. . . . .	Connector Assembly (CPS520) Display Harness	1
4	1493430	Connector (6 Way Housing)	1
4	1529052	Connector (Secondary Lock)	1
4	1330438	Terminal (Socket)	6
5	. . . . .	Connector Assembly (CPS521) Display Harness	1
5	1484557	Connector (2 Socket)	1
5	1484558	Connector (Secondary Lock)	1
5	1463139	Terminal	2
6	. . . . .	Connector Assembly (CPS221) Aux 12V Power Connector #1	1
6	1632865	Connector (DTP PLU 4 Socket)	1
6	1514603	Connector (Secondary Lock)	1
6	1554359	Terminal	4
7	. . . . .	Cap Assembly (CRP221) Aux 12V Cap Connector #1	1
7	4047669	Connector (DTP REC 4-Pin)	1
7	1514598	Connector (Secondary Lock)	1
7	1330439	Plug Seal	4
8	. . . . .	Connector Assembly (CRS3) VSM V3	1
8	4135139	Connector (MX150, Keying Option B)	1
8	4137207	Terminal (Socket)	13
8	4655881	Plug (Cavity)	7
9	. . . . .	Connector Assembly (CRS2) VSM V2	1
9	4135138	Connector (MX150, Keying Option A)	1
9	4137207	Terminal (Socket)	14
9	4655881	Plug (Cavity)	4
9	4655880	Terminal (MX150, 14-16 AWG)	2
10	. . . . .	Connector Assembly (CRS1) VSM V1	1
10	4135136	Connector	1
10	4137207	Terminal (Socket)	6
10	4655880	Terminal (MX150, 14-16 AWG)	2
11	. . . . .	Connector Assembly (CRS5) VSM V5	1
11	4135141	Connector (MX150, Keying Option D)	1
11	4137207	Terminal (Socket)	14
11	4655881	Plug (Cavity)	6
12	. . . . .	Connector Assembly (CRS4) VSM V4	1

©2026 HYSTER COMPANY

WIRE HARNESS

CHASSIS (FULL OPTION) – HYDROSTATIC TRANSMISSION (PAGE 1 OF 2) (→ 2/2024)

ITEM	PART NO.	DESCRIPTION	QTY
12	4135140	Connector (MX150, Keying Option C)	1
12	4137207	Terminal (Socket)	18
12	4655881	Plug (Cavity)	2
13	. . . . .	Connector Assembly (CPS534) E-Hydraulic Harness	1
13	4176575	Connector	1
13	1502626	Connector (Secondary Lock)	1
13	1330438	Terminal (Socket)	6
13	1484377	Plug	2
13	4044070	Cap	1
14	. . . . .	Connector Assembly (CPS397) Cab Harness	1
14	1493430	Connector (6 Way Housing)	1
14	1529052	Connector (Secondary Lock)	1
14	1330438	Terminal (Socket)	6
15	. . . . .	Connector Assembly (CRP397) Cab Jumper Cap	1
15	1525589	Connector (6-Pin)	1
15	1330417	Connector (Secondary Lock)	1
15	1330437	Terminal (Pin)	4
15	1484377	Plug	2
16	. . . . .	Connector Assembly (CRS529) Column Harness	1
16	4135138	Connector (MX150, Keying Option A)	1
16	4137207	Terminal (Socket)	16
16	4655881	Plug (Cavity)	4
17	. . . . .	Connector Assembly (CPS232) USB Port	1
17	1484555	Connector Body (10-Way)	1
17	4178577	Terminal	2
18	. . . . .	Connector Assembly (T233) Power Port (+)	1
18	1310142	Terminal	1
19	. . . . .	Connector Assembly (T234) Power Port (-)	1
19	1310142	Terminal	1
20	. . . . .	Connector Assembly (CPS655) RTST Override Button	1
20	1484557	Connector (2 Socket)	1
20	1484558	Connector (Secondary Lock)	1
20	1463139	Terminal	2
21	. . . . .	Cap Assembly (CRP655) RTST Override Button Cap	1
21	1561559	Connector (2 Pin)	1
21	1561755	Connector (Secondary Lock)	1
21	1484377	Plug	2
22	. . . . .	Connector Assembly (CPS589) CAN Switch	1
22	1493430	Connector (6 Way Housing)	1
22	1529052	Connector (Secondary Lock)	1
22	1330438	Terminal (Socket)	4
22	1484377	Plug	2
22	4036873	Cap (6 Way)	1
23	. . . . .	Connector Assembly (CPS590) CAN Switch	1
23	1489656	Connector (4-Way)	1
23	1489657	Connector (Secondary Lock)	1
23	1330438	Terminal (Socket)	4
23	4036523	Cap	1
24	. . . . .	Connector Assembly (CPS501) Diagnostic Interface	1
24	4220326	Connector (9-Pin)	1

©2026 HYSTER COMPANY

WIRE HARNESS

CHASSIS (FULL OPTION) – HYDROSTATIC TRANSMISSION (PAGE 1 OF 2) (→ 2/2024)

ITEM	PART NO.	DESCRIPTION	QTY
24	1330437	Terminal (Pin)	7
24	1484377	Plug	2
24	4180124	Cap	1
25	. . . . .	Connector Assembly (CPS570) Forward Spot Light Jumper	1
25	1490242	Connector (2 Way)	1
25	1490243	Connector (Secondary Lock)	1
25	1330438	Terminal (Socket)	2
25	4035905	Cap (DT 2-Way)	1
26	. . . . .	Connector Assembly (CPS541) Left Front Work Light Harness	1
26	1489656	Connector (4-Way)	1
26	1489657	Connector (Secondary Lock)	1
26	1330438	Terminal (Socket)	4
27	. . . . .	Connector Assembly (CPS324) Ambient Light Sensor	1
27	1493462	Connector (DTM PLU 3-Socket)	1
27	1493464	Connector (Secondary Lock)	1
27	1463139	Terminal	3
28	. . . . .	Cap Assembly (CRP324) Ambient Light Sensor Cap	1
28	~~4257399~~		
	1463180	Connector (DTM REC 3-Pin)	1
28	~~4257401~~		
	1463191	Connector (Secondary Lock)	1
28	1484377	Plug	3
29	. . . . .	Connector Assembly (CPS231) Brake Fluid Level Sensor	1
29	. . . . .	Connector	1
29	4707064	Connector Lock	1
29	4701730	Terminal	2
29	. . . . .	Seal	2
30	. . . . .	Connector Assembly (CPS574) WBA Parking Brake Jumper	1
30	1525580	Connector	1
30	1502626	Connector (Secondary Lock)	1
30	1330438	Terminal (Socket)	8
30	4044070	Cap	1
31	. . . . .	Connector Assembly (CPS171) Parking Brake Position Sensor	1
31	1700460	Connector	1
31	1700461	Terminal	3
32	. . . . .	Connector Assembly (CPS678) OPS Solenoid	1
32	1490242	Connector (2 Way)	1
32	1490243	Connector (Secondary Lock)	1
32	1330438	Terminal (Socket)	2
33	. . . . .	Connector Assembly (CPS1430) Engine Anti-Stall Solenoid	1
33	4168181	Connector	1
33	1490243	Connector (Secondary Lock)	1
33	1330438	Terminal (Socket)	2
33	4035905	Cap (DT 2-Way)	1
34	. . . . .	Cap Assembly (CRP656) Tilt Spool Position Cap	1
34	1463139	Terminal	3
34	1493464	Connector (Secondary Lock)	1
34	1493462	Connector (DTM PLU 3-Socket)	1
34	. . . . .	Connector Assembly (CPS656) Tilt Spool Position	1
35	~~4257399~~	Connector (DTM REC 3-Pin)	1

©2026 HYSTER COMPANY

WIRE HARNESS

CHASSIS (FULL OPTION) – HYDROSTATIC TRANSMISSION (PAGE 1 OF 2) (→ 2/2024)

ITEM	PART NO.	DESCRIPTION	QTY
	1463180		
35	~~4257401~~		
	1463191	Connector (Secondary Lock)	1
35	1484377	Plug	3
36	. . . . .	Connector Assembly (CPS561) Tilt Proportion Valve Jumper	1
36	1484557	Connector (2 Socket)	1
36	1484558	Connector (Secondary Lock)	1
36	1463139	Terminal	2
37	. . . . .	Cap Assembly (CRP561) Tilt Proportion Valve Jumper Cap	1
37	1561559	Connector (2 Pin)	1
37	1561755	Connector (Secondary Lock)	1
37	1484377	Plug	2
38	. . . . .	Connector Assembly (CPS637) Load Weigh Sensor	1
38	1525595	Connector	1
38	1525596	Terminal	3
38	~~1569975~~		
	1533810	Seal (Green)	3
39	. . . . .	Connector Assembly (CPS636) Hyd/VDP Temperature Sensor	1
39	1402868	Connector	1
39	4223854	Terminal	2
40	4140361	Cable Clip	5
41	1608857	Clip	3
42	4276772	Retainer	1

©2026 HYSTER COMPANY

NOTES

WIRE HARNESS (FIGURE 11-100)

CHASSIS (FULL OPTION) — HYDROSTATIC TRANSMISSION (PAGE 1 OF 2) (2/2024 →)

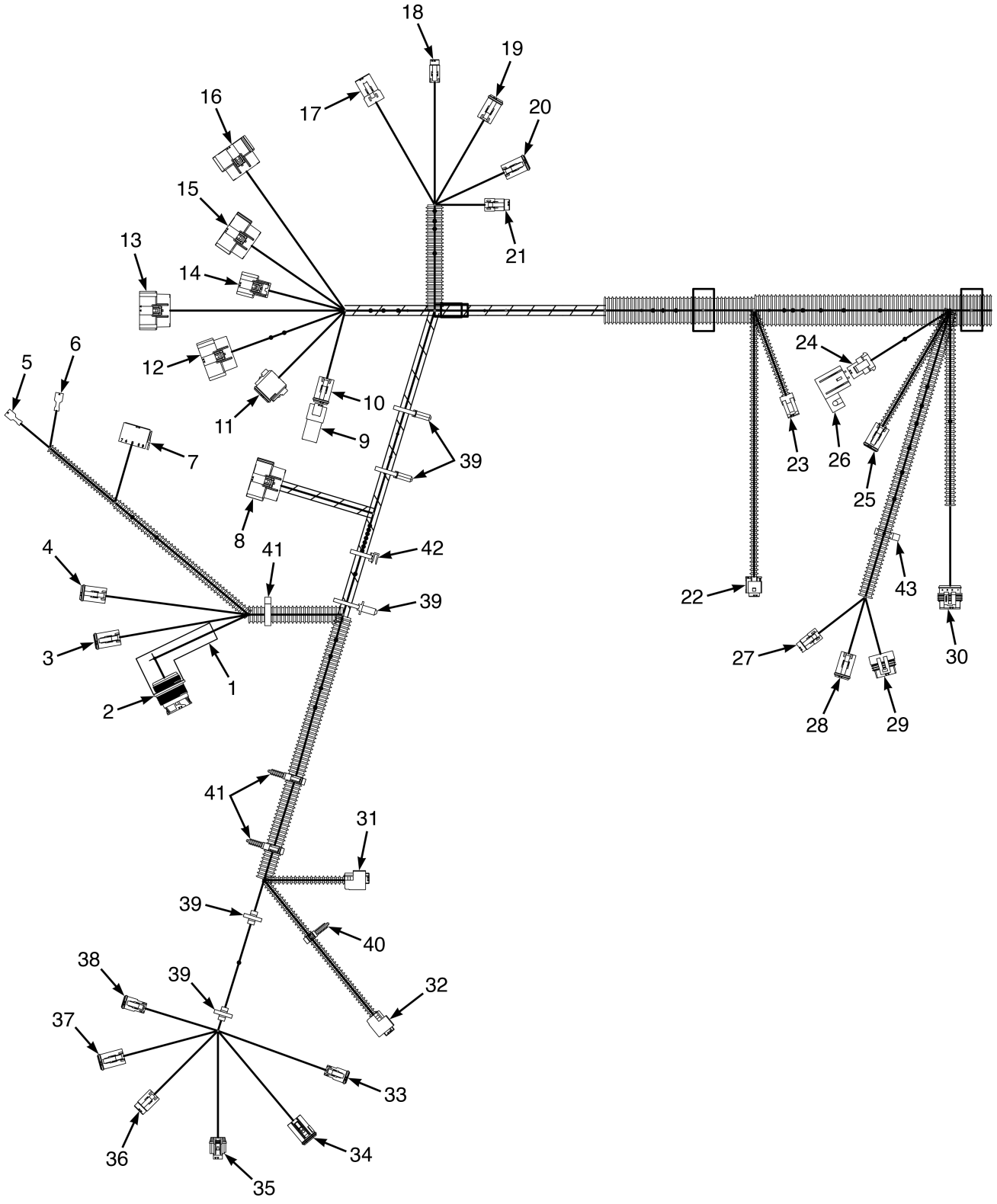

©2026 HYSTER COMPANY

WIRE HARNESS

CHASSIS (FULL OPTION) – HYDROSTATIC TRANSMISSION (PAGE 1 OF 2) (2/2024 →)

ITEM	PART NO.	DESCRIPTION	QTY
	4733396	Wire Harness - Chassis, Hydrostatic Transmission (Full Opt)	1
1	4338200	Protector (Boot)	1
2	. . . . .	Connector Assembly (CPS501) Diagnostic Interface	1
2	4350103	Connector	1
2	1330437	Terminal (Pin)	7
2	1484377	Plug	2
3	. . . . .	Connector Assembly (CPS590) CAN Switch	1
3	1489656	Connector (4-Way)	1
3	1489657	Connector (Secondary Lock)	1
3	1330438	Terminal (Socket)	4
4	. . . . .	Connector Assembly (CPS589) CAN Switch	1
4	1493430	Connector (6 Way Housing)	1
4	1529052	Connector (Secondary Lock)	1
4	1330438	Terminal (Socket)	4
4	1484377	Plug	2
5	. . . . .	Connector Assembly (T234) Power Port (-)	1
5	1310142	Terminal	1
6	. . . . .	Connector Assembly (T233) Power Port (+)	1
6	1310142	Terminal	1
7	. . . . .	Connector Assembly (CPS232) USB Port	1
7	1484555	Connector Body (10-Way)	1
7	4178577	Terminal	2
8	. . . . .	Connector Assembly (CRS529) Column Harness	1
8	4135138	Connector (MX150, Keying Option A)	1
8	4137207	Terminal (Socket)	16
8	4331375	Plug	4
9	. . . . .	Connector Assembly (CRP397) Cab Jumper Cap	1
9	1525589	Connector (6-Pin)	1
9	1330417	Connector (Secondary Lock)	1
9	1330437	Terminal (Pin)	4
9	1484377	Plug	2
10	. . . . .	Connector Assembly (CPS397 Cab Harness	1
10	1493430	Connector (6 Way Housing)	1
10	1529052	Connector (Secondary Lock)	1
10	1330438	Terminal (Socket)	6
11	. . . . .	Connector Assembly (CPS534) E-Hyd Harness	1
11	4176575	Connector	1
11	1502626	Connector (Secondary Lock)	1
11	1330438	Terminal (Socket)	6
11	1484377	Plug	2
12	. . . . .	Connector Assembly (CRS4) VSM V4	1
12	4135140	Connector (MX150, Keying Option C)	1
12	4137207	Terminal (Socket)	18
12	4331375	Plug	2
13	. . . . .	Connector Assembly (CRS5) VSM V5	1
13	4135141	Connector (MX150, Keying Option D)	1
13	4137207	Terminal (Socket)	13
13	4331375	Plug	7
14	. . . . .	Connector Assembly (CRS1) VSM V1	1
14	4135136	Connector	1

WIRE HARNESS

CHASSIS (FULL OPTION) – HYDROSTATIC TRANSMISSION (PAGE 1 OF 2) (2/2024 →)

ITEM	PART NO.	DESCRIPTION	QTY
14	4137207	Terminal (Socket)	6
14	4655880	Terminal (MX150, 14-16 AWG)	2
15	. . . . .	Connector Assembly (CRS2) VSM V2	1
15	4135138	Connector (MX150, Keying Option A)	1
15	4137207	Terminal (Socket)	13
15	4655881	Plug (Cavity)	5
15	4655880	Terminal (MX150, 14-16 AWG)	2
16	. . . . .	Connector Assembly (CRS3) VSM V3	1
16	4135139	Connector (MX150, Keying Option B)	1
16	4137207	Terminal (Socket)	13
16	4331375	Plug	7
17	. . . . .	Connector Assembly (CPS221) Aux 12v Power Connector 1	1
17	1632865	Connector (DTP PLU 4 Socket)	1
17	1514603	Connector (Secondary Lock)	1
17	1554359	Terminal	4
18	. . . . .	Connector Assembly (CPS521) Display Harness	1
18	1484557	Connector (2 Socket)	1
18	1484558	Connector (Secondary Lock)	1
18	1463139	Terminal	2
19	. . . . .	Connector Assembly (CPS520) Display Harness	1
19	1493430	Connector (6 Way Housing)	1
19	1529052	Connector (Secondary Lock)	1
19	1330438	Terminal (Socket)	3
19	1484377	Plug	3
20	. . . . .	Connector Assembly (CPS540) Right Front Work Light Harness	1
20	1489656	Connector (4-Way)	1
20	1489657	Connector (Secondary Lock)	1
20	1330438	Terminal (Socket)	4
21	. . . . .	Connector Assembly (CPS575) To Card Reader Jumper	1
21	1463189	Connector	1
21	1463196	Connector (Secondary Lock, DTM PLU 4-Socket)	1
21	1463139	Terminal	4
22	. . . . .	Connector Assembly (CPS637) Load Weigh Sensor	1
22	1525595	Connector	1
22	1525596	Terminal	3
23	. . . . .	Connector Assembly (CPS636) Hyd/VDP Temp Sensor	1
23	1402868	Connector	1
23	4223854	Terminal	2
24	. . . . .	Connector Assembly (CPS1465) Fuse Holder	1
24	1329152	Plug	1
24	1329151	Secondary Lock	1
24	1329148	Terminal	1
24	1330281	Terminal	1
25	. . . . .	Connector Assembly (CPS532) HST Transmission Harness	1
25	1489656	Connector (4-Way)	1
25	1489657	Connector (Secondary Lock)	1
25	1330438	Terminal (Socket)	4
26	. . . . .	Connector Assembly Fuse	1
26	1498047	Fuse (15 Amp)	1
26	4294132	Cover	1

See Service Manual for service procedures.
©2026 HYSTER COMPANY

WIRE HARNESS

CHASSIS (FULL OPTION) – HYDROSTATIC TRANSMISSION (PAGE 1 OF 2) (2/2024 →)

ITEM	PART NO.	DESCRIPTION	QTY
26	1493462	Connector (DTM PLU 3-Socket)	1
27	. . . . .	Connector Assembly (CPS226) Accelerator Pedal Direction Select	1
27	1463189	Connector	1
27	1463196	Connector (Secondary Lock, DTM PLU 4-Socket)	1
27	1463139	Terminal	4
28	. . . . .	Connector Assembly (CPS577) Service Brake Pedal Position Sensor Dual	1
28	1493430	Connector (6 Way Housing)	1
28	1529052	Connector (Secondary Lock)	1
28	1330438	Terminal (Socket)	6
29	. . . . .	Connector Assembly (CPS227) Accelerator Pedal Position Sensor	1
29	1525584	Connector	1
29	4223854	Terminal	6
30	. . . . .	Connector Assembly (CPS289) Horn	1
30	1508211	Connector (4 Way)	1
30	1508232	Terminal (Pin)	4
31	**b**	Connector Assembly (CPS225) Service Brake Pedal Position Sensor	1
31	1700460	Connector	1
31	1700461	Terminal	3
32	**b**	Connector Assembly (CPS171) Park Brake Position Sensor	1
32	1700460	Connector	1
32	1700461	Terminal	3
33	**a** 4321306	Connector (Jumper Cap)	1
33	. . . . .	Connector Assembly (CPS410) To Q-Current Switch	1
33	1490242	Connector (2 Way)	1
33	1490243	Connector (Secondary Lock)	1
33	1330438	Terminal (Socket)	2
34	. . . . .	Connector Assembly (CPS574) Wet Brake Park Brake Jumper	1
34	1525580	Connector	1
34	1502626	Connector (Secondary Lock)	1
34	1330438	Terminal (Socket)	8
35	**b**	Connector Assembly (CPS231) Brake Fluid Level	1
35	4722912	Connector	1
35	4707064	Connector Lock	1
35	4701730	Terminal	2
36	. . . . .	Connector Assembly (CPS324) Ambient Light Sensor	1
36	1493462	Connector (DTM PLU 3-Socket)	1
36	1493464	Connector (Secondary Lock)	1
36	1463139	Terminal	3
37	. . . . .	Connector Assembly (CPS541) Left Front Work LIght Harness	1
37	1489656	Connector (4-Way)	1
37	1489657	Connector (Secondary Lock)	1
37	1330438	Terminal (Socket)	4
38	. . . . .	Connector Assembly (CPS570) Forward Spot Light Jumper	1
38	1490242	Connector (2 Way)	1
38	1490243	Connector (Secondary Lock)	1
38	1330438	Terminal (Socket)	2
39	4140361	Cable Clip	9
40	**b** 1509888	Clip (Conduit)	3
40	**c** 1509888	Clip (Conduit)	1
41	1608857	Clip	5

©2026 HYSTER COMPANY

WIRE HARNESS

CHASSIS (FULL OPTION) – HYDROSTATIC TRANSMISSION (PAGE 1 OF 2) (2/2024 →)

ITEM	PART NO.	DESCRIPTION	QTY
42	4276772	Retainer	1
43	1509890	Clip	1

FOOTNOTES:

a If CPS410 is installed and without Q-Switch or E-Box then this jumper cap needs to be installed.

b → 8/2024

c 8/2024 →

©2026 HYSTER COMPANY

NOTES

WIRE HARNESS (FIGURE 11-101)

CHASSIS (FULL OPTION) — HYDROSTATIC TRANSMISSION (PAGE 2 OF 2) (→ 2/2024)

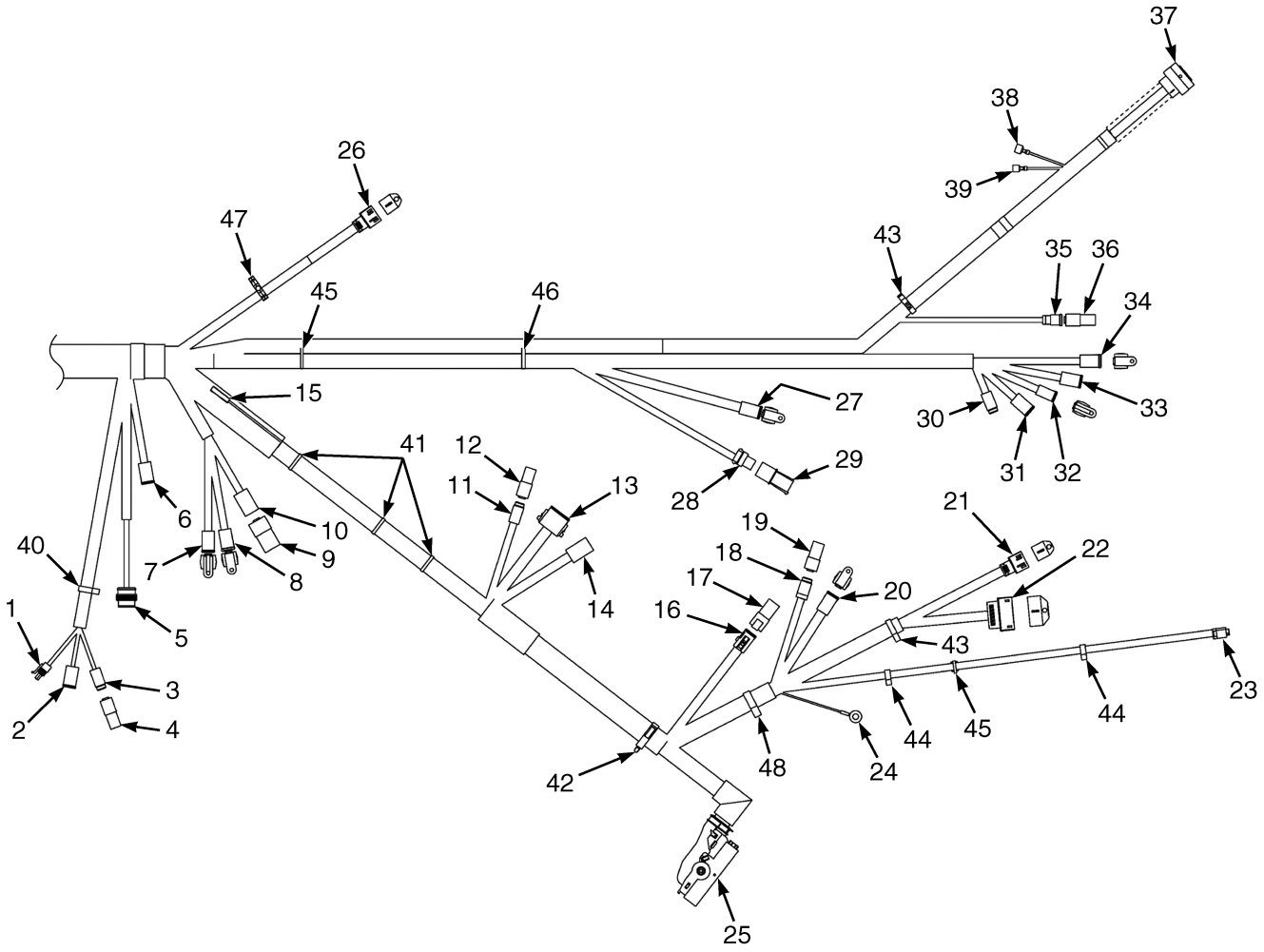

©2026 HYSTER COMPANY

WIRE HARNESS

CHASSIS (FULL OPTION) – HYDROSTATIC TRANSMISSION (PAGE 2 OF 2) (→ 2/2024)

ITEM	PART NO.	DESCRIPTION	QTY
	4710131	Wire Harness (Chassis - Hydrostatic Transmission (Full Opt))	1
1	. . . . .	Connector Assembly (CPS227) Accelerator Pedal Position Sensor	1
1	1525584	Connector	1
1	4223854	Terminal	6
2	. . . . .	Connector Assembly (CPS577) Service Brake Pedal Position Sensor	1
2	1493430	Connector (6 Way Housing)	1
2	1529052	Connector (Secondary Lock)	1
2	1330438	Terminal (Socket)	6
3	. . . . .	Connector Assembly (CPS226) Accelerator Pedal Direction Selector	1
3	1463189	Connector	1
3	1463196	Connector (Secondary Lock, DTM PLU 4-Socket)	1
3	1463139	Terminal	4
4	. . . . .	Cap Assembly (CRP226) Direction Selector Cap	1
4	~~4170087~~		
	1463184	Connector Housing	1
4	~~4046140~~		
	1463193	Connector	1
4	1484377	Plug	4
5	. . . . .	Connector Assembly (CPS289) Horn	1
5	1508211	Connector (4 Way)	1
5	1508232	Terminal (Pin)	4
5	2060555	Wire Seal (Yellow)	4
6	. . . . .	Connector Assembly (CPS532) HST Transmission Harness	1
6	1489656	Connector (4-Way)	1
6	1489657	Connector (Secondary Lock)	1
6	1330438	Terminal (Socket)	4
7	. . . . .	Connector Assembly (CPS700) Object Detection Connection	1
7	1493430	Connector (6 Way Housing)	1
7	1529052	Connector (Secondary Lock)	1
7	1330438	Terminal (Socket)	6
7	4036873	Cap (6 Way)	1
8	. . . . .	Connector Assembly (CPS502) Impact Sensor	1
8	4167341	Connector	1
8	1489657	Connector (Secondary Lock)	1
8	1330438	Terminal (Socket)	4
8	4036523	Cap	1
9	. . . . .	Connector Assembly (CPS220) Aux 12V Power Connector #2	1
9	1632865	Connector (DTP PLU 4 Socket)	1
9	1514603	Connector (Secondary Lock)	1
9	1554359	Terminal	4
10	. . . . .	Cap Assembly (CRP220) Aux 12V Cap Connector #2	1
10	4047669	Connector (DTP REC 4-Pin)	1
10	1514598	Connector (Secondary Lock)	1
10	1330439	Plug Seal	4
11	. . . . .	Connector Assembly (CPS587) Backup Alarm Jumper	1
11	1463189	Connector	1
11	1463196	Connector (Secondary Lock, DTM PLU 4-Socket)	1
11	1463139	Terminal	4
12	. . . . .	Cap Assembly (CRP587) Backup Jumper Cap	1
12	~~4170087~~	Connector Housing	1

WIRE HARNESS

CHASSIS (FULL OPTION) – HYDROSTATIC TRANSMISSION (PAGE 2 OF 2) (→ 2/2024)

ITEM	PART NO.	DESCRIPTION	QTY
	1463184		
12	~~4046140~~		
	1463193	Connector	1
12	1484377	Plug	4
13	. . . . .	Connector Assembly (CPS510) Engine Harness Connector #1	1
13	1493428	Connector (12-Way)	1
13	1500913	Connector (Secondary Lock)	1
13	1330438	Terminal (Socket)	10
13	1484377	Plug	2
14	. . . . .	Connector Assembly (CPS511) Engine Harness Connector #2	1
14	1632865	Connector (DTP PLU 4 Socket)	1
14	1514603	Connector (Secondary Lock)	1
14	1493434	Terminal (Socket)	1
14	1554359	Terminal	3
15	. . . . .	Connector Assembly (T358) Heater	1
15	1324310	Terminal	1
15	1324309	Sleeve	1
16	. . . . .	Connector Assembly (CPS530) Mast Jumper Harness	1
16	1493428	Connector (12-Way)	1
16	1500913	Connector (Secondary Lock)	1
16	1330438	Terminal (Socket)	8
16	1484377	Plug	4
17	. . . . .	Cap Assembly (CRP530) Mast Jumper Cap	1
17	1531746	Electrical Connector	1
18	. . . . .	Connector Assembly (CPS582) LPG Tank Bracket Jumper	1
18	1493462	Connector (DTM PLU 3-Socket)	1
18	1493464	Connector (Secondary Lock)	1
18	1463139	Terminal	3
19	. . . . .	Cap Assembly (CRP582) LPG Tank Bracket Cap	1
19	~~4257399~~		
	1463180	Connector (DTM REC 3-Pin)	1
19	~~4257401~~		
	1463191	Connector (Secondary Lock)	1
19	1484377	Plug	3
20	. . . . .	Connector Assembly (CPS535) Steer Axle Position Sensor Jumper	1
20	1489656	Connector (4-Way)	1
20	1489657	Connector (Secondary Lock)	1
20	1330438	Terminal (Socket)	4
20	4036523	Cap	1
21	. . . . .	Connector Assembly (CRS11) iBox1 I1 (☞Figure 11-22, ☞Figure 11-21)	1
21	4135137	Connector	1
21	4137207	Terminal (Socket)	5
21	4655880	Terminal (MX150, 14-16 AWG)	2
21	4655881	Plug (Cavity)	1
21	4700066	Cap	1
22	. . . . .	Connector Assembly (CRS12) iBox1 I2 (☞Figure 11-22, ☞Figure 11-21)	1
22	4135138	Connector (MX150, Keying Option A)	1
22	4137207	Terminal (Socket)	13
22	4655881	Plug (Cavity)	7
22	4700067	Cap	1

©2026 HYSTER COMPANY

WIRE HARNESS

CHASSIS (FULL OPTION) – HYDROSTATIC TRANSMISSION (PAGE 2 OF 2) (→ 2/2024)

ITEM	PART NO.	DESCRIPTION	QTY
23	. . . . .	Connector Assembly (CPS230) Service Brake Pressure Sensor	1
23	1525595	Connector	1
23	1525596	Terminal	3
23	~~1569975~~		
	1533810	Seal (Green)	3
24	. . . . .	Connector Assembly (T448) Static Ground	1
24	1402620	Ring Terminal	1
25	. . . . .	Connector Assembly (CRS52) Main PDM	1
25	4229521	Receptacle Housing	1
25	4177244	Terminal (Socket)	26
25	4229186	Terminal (Socket)	6
25	1502919	Plug (Junior Timer Blanking Seal)	6
25	4229187	Terminal	1
25	1562649	Seal	26
25	1479109	Seal	7
25	137852	Strap Clamp	1
25	4023934	Clip	1
25	4228361	Connector (Backshell)	1
26	. . . . .	Connector Assembly (CRS13) iBox2 I1 (☞Figure 11-22, ☞Figure 11-21)	1
26	4135137	Connector	1
26	4137207	Terminal (Socket)	5
26	4655880	Terminal (MX150, 14-16 AWG)	2
26	4655881	Plug (Cavity)	1
26	4700066	Cap	1
27	. . . . .	Connector Assembly (CPS433) Battery Contactor Control	1
27	1489656	Connector (4-Way)	1
27	1489657	Connector (Secondary Lock)	1
27	1330438	Terminal (Socket)	3
27	1363886	Terminal (Socket)	1
27	4036523	Cap	1
28	. . . . .	Connector Assembly (CPS671) Hydraulic Filter Switch	1
28	1329152	Plug	1
28	1329151	Secondary Lock	1
28	1330281	Terminal	2
28	1402888	Seal (Purple)	2
29	. . . . .	Cap Assembly (CRP671) Hydraulic Filter Cap	1
29	1329150	Connector	1
29	1329151	Secondary Lock	1
29	1327164	Terminator	2
30	. . . . .	Connector Assembly (CPS544) Rear OHG Harness	1
30	1531973	Connector	1
30	1531974	Connector (Secondary Lock)	1
30	1463139	Terminal	5
30	1484377	Plug	1
31	. . . . .	Connector Assembly (CPS542) Rear OHG Harness	1
31	1489656	Connector (4-Way)	1
31	1489657	Connector (Secondary Lock)	1
31	1330438	Terminal (Socket)	4
32	. . . . .	Connector Assembly (CPS279) OHG Horn Button	1
32	1490242	Connector (2 Way)	1

©2026 HYSTER COMPANY

WIRE HARNESS

CHASSIS (FULL OPTION) – HYDROSTATIC TRANSMISSION (PAGE 2 OF 2) (→ 2/2024)

ITEM	PART NO.	DESCRIPTION	QTY
32	1490243	Connector (Secondary Lock)	1
32	1330438	Terminal (Socket)	2
32	4035905	Cap (DT 2-Way)	1
33	. . . . .	Connector Assembly (CPS543) Rear OHG Harness	1
33	1330422	Connector (DT PLU 6-Socket)	1
33	1330428	Connector (Secondary Lock)	1
33	1330438	Terminal (Socket)	5
33	1330439	Plug Seal	1
34	. . . . .	Connector Assembly (CPS571) Pedestrian Awareness Light Jumper	1
34	4167341	Connector	1
34	1489657	Connector (Secondary Lock)	1
34	1330438	Terminal (Socket)	4
34	4036523	Cap	1
35	. . . . .	Connector Assembly (CPS403) Remote Keyswitch	1
35	4168181	Connector	1
35	1490243	Connector (Secondary Lock)	1
35	1330438	Terminal (Socket)	2
36	. . . . .	Cap Assembly (CRP403) Remote Keyswitch Jumper	1
36	1493465	Connector (2 Pin)	1
36	1330414	Connector (Secondary Lock)	1
36	1330437	Terminal (Pin)	2
37	. . . . .	Connector Assembly (CPS531) Seat Harness	1
37	4176926	Connector	1
37	1463139	Terminal	15
37	1330438	Terminal (Socket)	2
37	1484377	Plug	3
38	. . . . .	Connector Assembly (TM551) Seat Compressor Power (-)	1
38	1310143	Terminal (Male)	1
39	. . . . .	Connector Assembly (TF550) Seat Compressor Power (+)	1
39	1310142	Terminal	1
40	1509890	Clip	1
41	4140361	Cable Clip	3
42	1540944	Clip	1
43	1608857	Clip	2
44	1509888	Clip (Conduit)	2
45	4280606	Retainer (Cable Tie Clip)	2
46	1616343	Strap Clamp	1
47	1646457	Clip	1
48	1509889	Clip	1

©2026 HYSTER COMPANY

NOTES

WIRE HARNESS (FIGURE 11-102)

CHASSIS (FULL OPTION) — HYDROSTATIC TRANSMISSION (PAGE 2 OF 2) (2/2024 →)

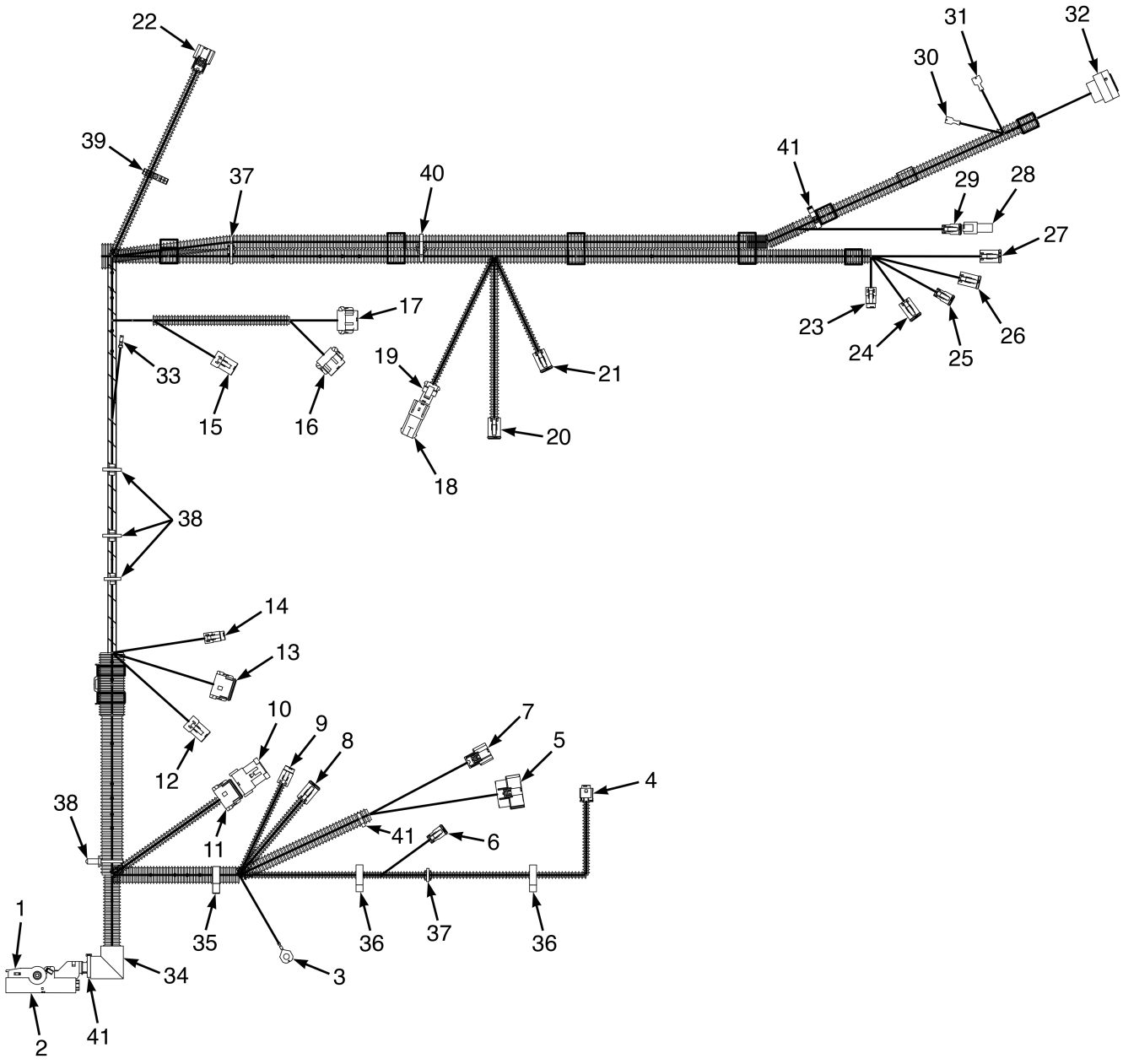

BP084591

©2026 HYSTER COMPANY

WIRE HARNESS

CHASSIS (FULL OPTION) – HYDROSTATIC TRANSMISSION (PAGE 2 OF 2) (2/2024 →)

ITEM	PART NO.	DESCRIPTION	QTY
	4733396	Wire Harness - Chassis, Hydrostatic Transmission (Full Opt)	1
1	4228361	Connector (Backshell)	1
2	. . . . .	Connector Assembly (CRS52) Main PDM	1
2	4229521	Receptacle Housing	1
2	4228361	Connector (Backshell)	1
2	4177244	Terminal (Socket)	24
2	4229186	Terminal (Socket)	7
2	4229187	Terminal	1
2	1502919	Plug (Junior Timer Blanking Seal)	7
3	. . . . .	Connector Assembly (T448) Static Ground	1
3	1402620	Ring Terminal	1
4	. . . . .	Connector Assembly (CPS230) Service Brake Pressure Sensor	1
4	1525595	Connector	1
4	1525596	Terminal	3
5	. . . . .	Connector Assembly (CRS12) I Box1 I2	1
5	4135138	Connector (MX150, Keying Option A)	1
5	4137207	Terminal (Socket)	12
5	4655880	Terminal (MX150, 14-16 AWG)	1
5	4331375	Plug	7
6	. . . . .	Connector Assembly (CPS634) Service Brake Booster Coil	1
6	1490242	Connector (2 Way)	1
6	1490243	Connector (Secondary Lock)	1
6	1330438	Terminal (Socket)	2
7	. . . . .	Connector Assembly (CRS11) I Box1 I1	1
7	4135137	Connector	1
7	4137207	Terminal (Socket)	5
7	4655880	Terminal (MX150, 14-16 AWG)	2
7	4331375	Plug	1
8	. . . . .	Connector Assembly (CPS535) Steer Axle Position Sensor Jumper	1
8	1489656	Connector (4-Way)	1
8	1489657	Connector (Secondary Lock)	1
8	1330438	Terminal (Socket)	4
9	. . . . .	Connector Assembly (CPS582) LPG Tank Bracket Jumper	1
9	1493462	Connector (DTM PLU 3-Socket)	1
9	1493464	Connector (Secondary Lock)	1
9	1463139	Terminal	3
10	. . . . .	Connector Assembly (CRP530) Mast Jumper Cap	1
10	1493428	Connector (12-Way)	1
10	1500913	Connector (Secondary Lock)	1
10	1330438	Terminal (Socket)	8
10	1484377	Plug	4
11	. . . . .	Connector Assembly (CPS530) Mast Jumper Harness	1
11	1531746	Electrical Connector	1
12	. . . . .	Connector Assembly (CPS511) Engine Harness Connection 2	1
12	1632865	Connector (DTP PLU 4 Socket)	1
12	1514603	Connector (Secondary Lock)	1
12	1493434	Terminal (Socket)	1
12	1554359	Terminal	3
13	. . . . .	Connector Assembly (CPS510) Engine Harness Connection 1	1
13	1493428	Connector (12-Way)	1

WIRE HARNESS

CHASSIS (FULL OPTION) – HYDROSTATIC TRANSMISSION (PAGE 2 OF 2) (2/2024 →)

ITEM	PART NO.	DESCRIPTION	QTY
13	1500913	Connector (Secondary Lock)	1
13	1330438	Terminal (Socket)	10
13	1484377	Plug	2
14	. . . . .	Connector Assembly (CPS587) Backup Alarm Jumper	1
14	1463189	Connector	1
14	1463196	Connector (Secondary Lock, DTM PLU 4-Socket)	1
14	1463139	Terminal	4
15	. . . . .	Connector Assembly (CPS220) Aux 12v Power Connector 2	1
15	1632865	Connector (DTP PLU 4 Socket)	1
15	1514603	Connector (Secondary Lock)	1
15	1554359	Terminal	4
16	. . . . .	Connector Assembly (CPS506) VAM 2	1
16	1525568	Connector (STM PLU 12-Socket)	1
16	1529046	Connector (Secondary Lock)	1
16	1463139	Terminal	4
16	1484377	Plug	8
17	. . . . .	Connector Assembly (CPS505) VAM 1	1
17	1525567	Connector (DTM PLU 12-Socket)	1
17	1529046	Connector (Secondary Lock)	1
17	1463139	Terminal	5
17	1484377	Plug	6
18	. . . . .	Connector Assembly (CRP671) Hyd Fluid Cap	1
18	1329150	Connector	1
18	1329151	Secondary Lock	1
18	1327164	Terminator	2
19	. . . . .	Connector Assembly (CPS671) Hyd Filter Switch	1
19	1329152	Plug	1
19	1329151	Secondary Lock	1
19	1330281	Terminal	2
20	. . . . .	Connector Assembly (CPS433) Battery Contactor Control	1
20	1489656	Connector (4-Way)	1
20	1489657	Connector (Secondary Lock)	1
20	1330438	Terminal (Socket)	4
21	. . . . .	Connector Assembly (CPS504) CAN Term 4	1
21	1489656	Connector (4-Way)	1
21	1489657	Connector (Secondary Lock)	1
21	1330438	Terminal (Socket)	2
21	1484377	Plug	2
22	. . . . .	Connector Assembly (CRS13) I Box2 I1	1
22	4135137	Connector	1
22	4137207	Terminal (Socket)	5
22	4655880	Terminal (MX150, 14-16 AWG)	2
22	4331375	Plug	1
23	**a**	Connector Assembly (CPS544) Rear OHG Harness	1
23	1463189	Connector	1
23	1463196	Connector (Secondary Lock, DTM PLU 4-Socket)	1
23	1463139	Terminal	2
23	1484377	Plug	2
24	. . . . .	Connector Assembly (CPS542) Rear OHG Harness	1
24	1489656	Connector (4-Way)	1

©2026 HYSTER COMPANY

WIRE HARNESS

CHASSIS (FULL OPTION) – HYDROSTATIC TRANSMISSION (PAGE 2 OF 2) (2/2024 →)

ITEM	PART NO.	DESCRIPTION	QTY
24	1489657	Connector (Secondary Lock)	1
24	1330438	Terminal (Socket)	4
25	. . . . .	Connector Assembly (CPS279) OHG Horn Button	1
25	1490242	Connector (2 Way)	1
25	1490243	Connector (Secondary Lock)	1
25	1330438	Terminal (Socket)	2
26	. . . . .	Connector Assembly (CPS543) Rear OHG Harness	1
26	1330422	Connector (DT PLU 6-Socket)	1
26	1330428	Connector (Secondary Lock)	1
26	1330438	Terminal (Socket)	5
26	1330439	Plug Seal	1
27	. . . . .	Connector Assembly (CPS571) Pedestrian Awareness Light Jumper	1
27	4167341	Connector	1
27	1489657	Connector (Secondary Lock)	1
27	1330438	Terminal (Socket)	4
28	. . . . .	Connector Assembly (CRP403) Remore Keyswitch Jumper	1
28	1493465	Connector (2 Pin)	1
28	1330414	Connector (Secondary Lock)	1
28	1330437	Terminal (Pin)	2
29	. . . . .	Connector Assembly (CPS403) Remote Keyswitch	1
29	4168181	Connector	1
29	1490243	Connector (Secondary Lock)	1
29	1330438	Terminal (Socket)	2
30	. . . . .	Connector Assembly (TF550) Seat Compressor Power (+)	1
30	1310142	Terminal	1
31	. . . . .	Connector Assembly (TM551) Seat Compressor Power (-)	1
31	1310143	Terminal (Male)	1
32	. . . . .	Connector Assembly (CPS531) Seat Harness	1
32	4176926	Connector	1
32	1463139	Terminal	15
32	1330438	Terminal (Socket)	2
32	1484377	Plug	3
33	. . . . .	Connector Assembly (T358) Heater	1
33	1324310	Terminal	1
34	4023934	Clip	1
35	1509889	Clip	10
36	**a** 1509888	Clip (Conduit)	3
36	**b** 1509888	Clip (Conduit)	1
37	**a** 4280606	Retainer (Cable Tie Clip)	2
37	**b** 4280606	Retainer (Cable Tie Clip)	1
38	4140361	Cable Clip	9
39	1646457	Clip	1
40	1616343	Strap Clamp	1
41	1608857	Clip	5
42	137852	Strap Clamp	1

FOOTNOTES:

a → 8/2024

b 8/2024 →

©2026 HYSTER COMPANY

WIRE HARNESS (FIGURE 11-103)
COLUMN — BASE

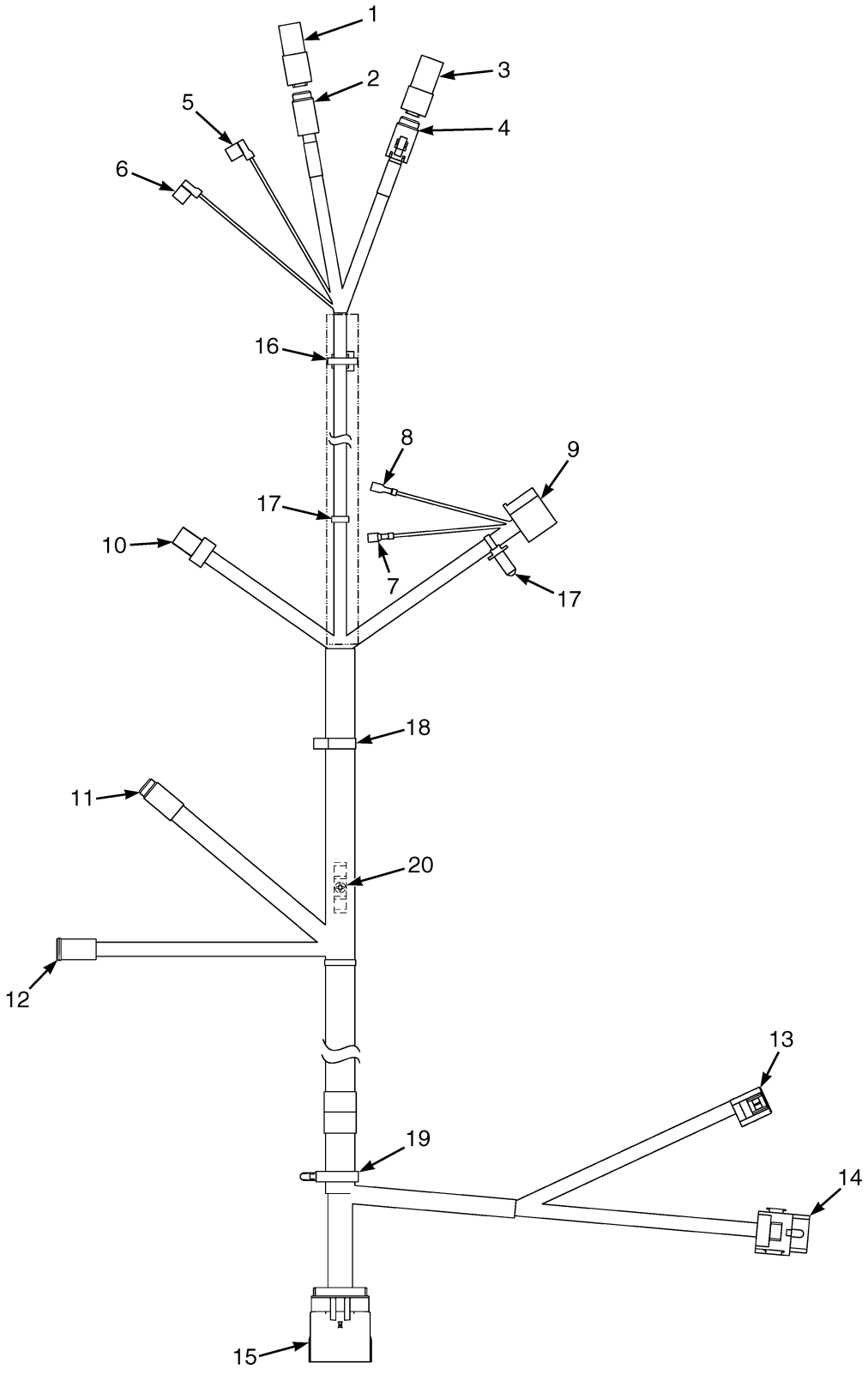

©2026 HYSTER COMPANY

WIRE HARNESS
COLUMN – BASE

KEY:
A: Base Horn/Key
B: Base Levers/Sync

ITEM	PART NO.	DESCRIPTION	QTY A	QTY B
	4694819	Wire Harness - Column (Base Horn/Keys)	1	..
	4694820	Wire Harness - Column (Base Levers/Sync)	..	1
1	. . . . .	Connector Assembly (CRP264) End Cap	..	1
1	~~4170087~~			
	1463184	Connector Housing	..	1
1	~~4046140~~			
	1463193	Connector	..	1
1	1484377	Plug	..	4
2	. . . . .	Connector Assembly (CPS264) Directional Control	..	1
2	1463189	Connector	..	1
2	1463196	Connector (Secondary Lock, DTM PLU 4-Socket)	..	1
2	1463139	Terminal	..	4
3	. . . . .	Connector Assembly (CRP322) End Cap	1	1
3	~~4257399~~			
	1463180	Connector (DTM REC 3-Pin)	1	1
3	~~4257401~~			
	1463191	Connector (Secondary Lock)	1	1
3	1484377	Plug	3	3
4	. . . . .	Connector Assembly (CPS322) Base Turn Signal	1	1
4	1493462	Connector (DTM PLU 3-Socket)	1	1
4	1493464	Connector (Secondary Lock)	1	1
4	1463139	Terminal	3	3
5	. . . . .	Connector Assembly (T188) Horn Com	1	1
5	2107952	Terminal	1	1
6	. . . . .	Connector Assembly (T187) Horn N/O	1	1
6	2107952	Terminal	1	1
7	. . . . .	Connector Assembly (TF402) Push Button Pin-4	1	1
7	3170550	Terminal	1	1
8	. . . . .	Connector Assembly (TF401) Push Button Pin-3	1	1
8	3170550	Terminal	1	1
9	. . . . .	Connector Assembly (CPS400) Key Switch	1	1
9	370728	Connector Body	1	1
9	1402908	Terminal	2	2
10	. . . . .	Connector Assembly (CPS162) Steer Sensor	..	1
10	1402865	Connector	..	1
10	1323576	Terminal	..	3
11	. . . . .	Connector Assembly (CPS163) E-Steer	..	1
11	1531973	Connector	..	1
11	1531974	Connector (Secondary Lock)	..	1
11	1463139	Terminal	..	6
12	. . . . .	Connector Assembly (CPS680) Sync Steer Control	..	1
12	1490242	Connector (2 Way)	..	1
12	1490243	Connector (Secondary Lock)	..	1
12	1330438	Terminal (Socket)	..	2
13	. . . . .	Connector Assembly (CPS218) Hazard Switch	..	1

WIRE HARNESS
COLUMN – BASE

KEY:
A: Base Horn/Key
B: Base Levers/Sync

ITEM	PART NO.	DESCRIPTION	QTY A	QTY B
13	1484555	Connector Body (10-Way)	..	1
13	4178577	Terminal	..	6
14	. . . . .	Connector Assembly (CPS161) Flasher	..	1
14	2100204	Receptacle (Mini Relay)	..	1
14	4056907	Terminal	..	3
15	. . . . .	Connector Assembly (CRP529) To Chassis Harness	1	1
15	4168954	Connector	1	1
15	4168958	Terminal (Socket)	16	16
15	4655881	Plug (Cavity)	4	4
16	1616345	Strap Clamp	1	1
17	4140361	Cable Clip	3	3
18	1509890	Clip	1	1
19	1500899	Clip	1	1
20	1708303	Clip	1	1

©2026 HYSTER COMPANY

NOTES

WIRE HARNESS (FIGURE 11-104)
COLUMN — BASE (ALTERNATE PART)

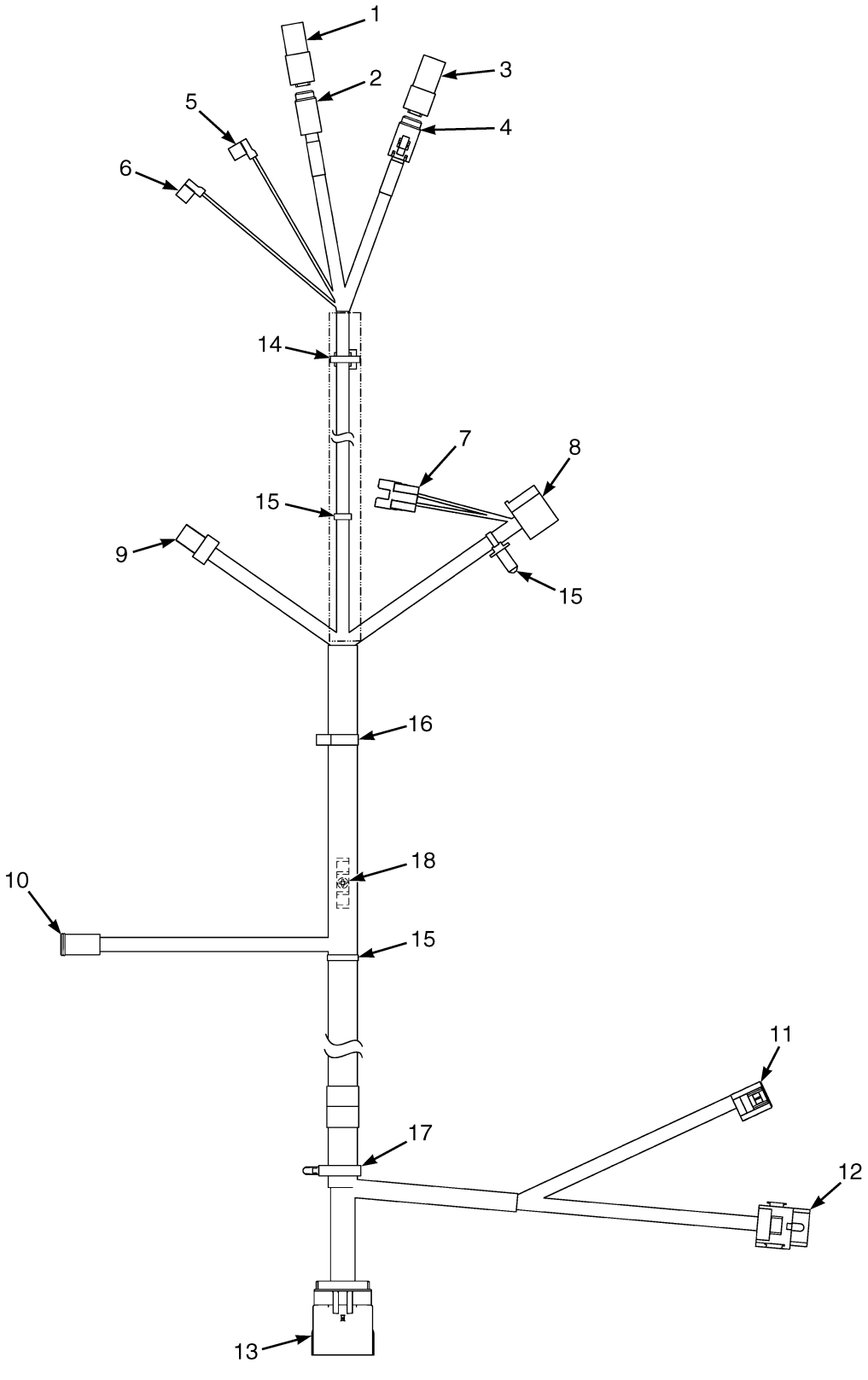

©2026 HYSTER COMPANY

WIRE HARNESS
COLUMN – BASE (ALTERNATE PART)

KEY:
A: Base Horn/Key
B: Base Levers/Sync

ITEM	PART NO.	DESCRIPTION	QTY A	QTY B
	4694819	Wire Harness - Column (Base Horn/Keys)	1	..
	4694820	Wire Harness - Column (Base Levers/Sync)	..	1
1	. . . . .	Connector Assembly (CRP264) End Cap	..	1
1	~~4170087~~			
	1463184	Connector Housing	..	1
1	~~4046140~~			
	1463193	Connector	..	1
1	1484377	Plug	..	4
2	. . . . .	Connector Assembly (CPS264) Directional Control	..	1
2	1463189	Connector	..	1
2	1463196	Connector (Secondary Lock, DTM PLU 4-Socket)	..	1
2	1463139	Terminal	..	4
3	. . . . .	Connector Assembly (CRP322) End Cap	..	1
3	~~4257399~~			
	1463180	Connector (DTM REC 3-Pin)	..	1
3	~~4257401~~			
	1463191	Connector (Secondary Lock)	..	1
3	1484377	Plug	..	3
4	. . . . .	Connector Assembly (CPS322) Base Turn Signal	..	1
4	1493462	Connector (DTM PLU 3-Socket)	..	1
4	1493464	Connector (Secondary Lock)	..	1
4	1463139	Terminal	..	3
5	. . . . .	Connector Assembly (T288) Horn Com	1	1
5	2107952	Terminal	1	1
6	. . . . .	Connector Assembly (T287) Horn N/O	1	1
6	2107952	Terminal	1	1
7	. . . . .	Connector Assembly (CRP401) Push Button	1	1
7	4323561	Connector	1	1
7	4323562	Terminal	4	4
8	. . . . .	Connector Assembly (CPS400) Key Switch	1	1
8	370728	Connector Body	1	1
8	1402908	Terminal	2	2
8	4270630	Terminal	4	4
9	. . . . .	Connector Assembly (CPS162) Steer Sensor	..	1
9	1402865	Connector	..	1
9	1323576	Terminal	..	3
10	. . . . .	Connector Assembly (CPS680) Sync Steer Coil	..	1
10	1490242	Connector (2 Way)	..	1
10	1490243	Connector (Secondary Lock)	..	1
10	1330438	Terminal (Socket)	..	2
11	. . . . .	Connector Assembly (CPS218) Hazard Switch	..	1
11	1484555	Connector Body (10-Way)	..	1
11	4178577	Terminal	..	6
12	. . . . .	Connector Assembly (CPS161) Flasher	..	1
12	2100204	Receptacle (Mini Relay)	..	1

WIRE HARNESS
COLUMN – BASE (ALTERNATE PART)

KEY:
A: Base Horn/Key
B: Base Levers/Sync

ITEM	PART NO.	DESCRIPTION	QTY A	QTY B
12	4056907	Terminal	..	3
13	. . . . .	Connector Assembly (CRP529) To Chassis Harness	1	1
13	4168954	Connector	1	1
13	4168958	Terminal (Socket)	15	15
13	4655881	Plug (Cavity)	5	5
14	1616345	Strap Clamp	1	1
15	4140361	Cable Clip	3	3
16	1509890	Clip	..	1
16	4046441	Clip	1	..
17	1500899	Clip	..	1
17	4046441	Clip	1	..
18	1708303	Clip	1	1

©2026 HYSTER COMPANY

NOTES

WIRE HARNESS (FIGURE 11-105)
COLUMN — FULL LEVERS

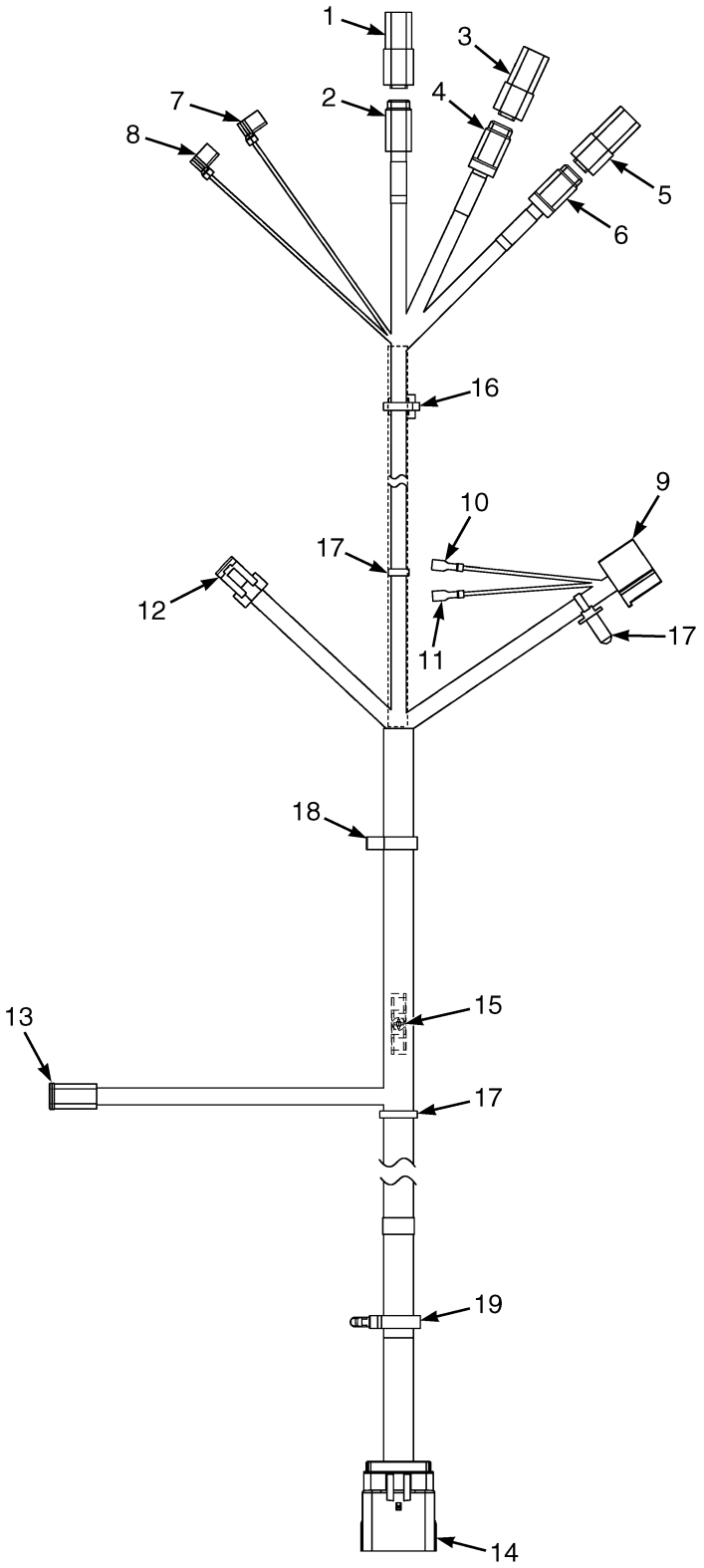

©2026 HYSTER COMPANY

WIRE HARNESS
COLUMN – FULL LEVERS

KEY:
A: Full Levers
B: Full Levers/Sync

ITEM	PART NO.	DESCRIPTION	QTY A	QTY B
	4694821	Wire Harness - Column (Full Levers)	1	..
	4694822	Wire Harness - Column (Full Levers/Sync)	..	1
1	. . . . .	Connector Assembly (CRP264) End Cap	1	1
1	~~4170087~~			
	1463184	Connector Housing	1	1
1	~~4046140~~			
	1463193	Connector	1	1
1	1484377	Plug	4	4
2	. . . . .	Connector Assembly (CPS264) Directional Control	1	1
2	1463189	Connector	1	1
2	1463196	Connector (Secondary Lock, DTM PLU 4-Socket)	1	1
2	1463139	Terminal	4	4
3	. . . . .	Connector Assembly (CRP325) End Cap	1	1
3	~~4257399~~			
	1463180	Connector (DTM REC 3-Pin)	1	1
3	~~4257401~~			
	1463191	Connector (Secondary Lock)	1	1
3	1484377	Plug	3	3
4	. . . . .	Connector Assembly (CPS325) Premium Turn Signal	1	1
4	1493462	Connector (DTM PLU 3-Socket)	1	1
4	1493464	Connector (Secondary Lock)	1	1
4	1463139	Terminal	3	3
5	. . . . .	Connector Assembly (CRP330) End Cap	1	1
5	4275903	Connector	1	1
5	~~4257401~~			
	1463191	Connector (Secondary Lock)	1	1
5	1484377	Plug	3	3
6	. . . . .	Connector Assembly (CPS330) Wiper Control	1	1
6	4275904	Connector	1	1
6	1493464	Connector (Secondary Lock)	1	1
6	1463139	Terminal	3	3
7	. . . . .	Connector Assembly (T288) Horn Com	1	1
7	2107952	Terminal	1	1
8	. . . . .	Connector Assembly (T287) Horn N/O	1	1
8	2107952	Terminal	1	1
9	. . . . .	Connector Assembly (CPS400) Key Switch	1	1
9	370728	Connector Body	1	1
9	1402908	Terminal	2	2
10	. . . . .	Connector Assembly (TF401) Push Button Pin-3	1	1
10	3170550	Terminal	1	1
11	. . . . .	Connector Assembly (TF402) Push Button Pin-4	1	1
11	3170550	Terminal	1	1
12	. . . . .	Connector Assembly (CPS162) Steer Sensor	..	1
12	1402865	Connector	..	1
12	1323576	Terminal	..	3

WIRE HARNESS
COLUMN – FULL LEVERS

KEY:
A: Full Levers
B: Full Levers/Sync

ITEM	PART NO.	DESCRIPTION	QTY A	QTY B
13	. . . . .	Connector Assembly (CPS680) Sync Steer Coil	..	1
13	1490242	Connector (2 Way)	..	1
13	1490243	Connector (Secondary Lock)	..	1
13	1330438	Terminal (Socket)	..	2
14	. . . . .	Connector Assembly (CRP529) To Chassis Harness	1	1
14	4168954	Connector	1	1
14	4168958	Terminal (Socket)	17	17
14	4655881	Plug (Cavity)	3	3
15	1708303	Clip	1	1
16	1616345	Strap Clamp	1	1
17	4140361	Cable Clip	3	3
18	1509890	Clip	1	1
19	1500900	Clip	1	1

©2026 HYSTER COMPANY

NOTES

WIRE HARNESS (FIGURE 11-106)
COLUMN — FULL LEVERS (ALTERNATE PART)

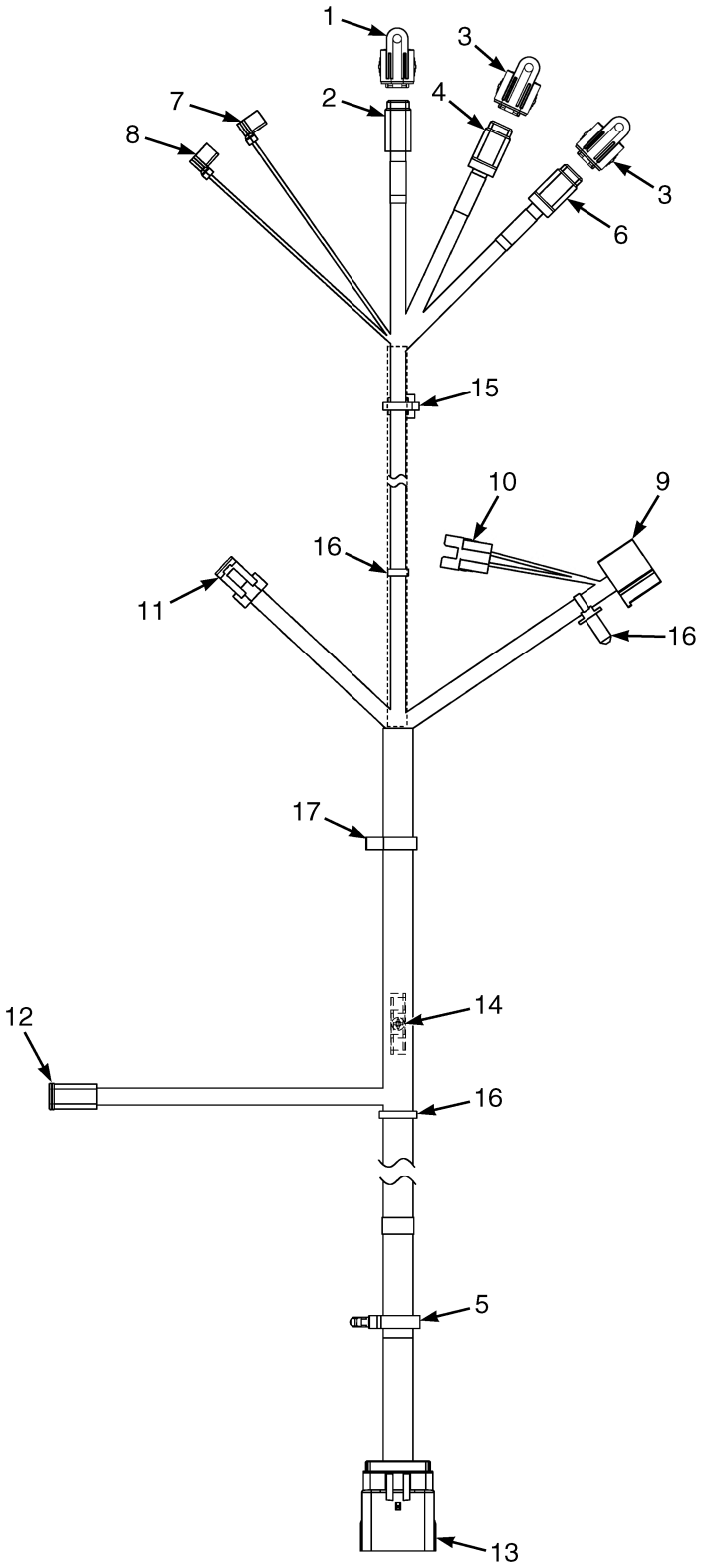

BP083765

©2026 HYSTER COMPANY

WIRE HARNESS

COLUMN – FULL LEVERS (ALTERNATE PART)

KEY:
A: Full Levers
B: Full Levers/Sync

ITEM	PART NO.	DESCRIPTION	QTY A	QTY B
	4694821	Wire Harness - Column (Full Levers)	1	..
	4694822	Wire Harness - Column (Full Levers/Sync)	..	1
1	4312825	Cap	1	1
2	. . . . .	Connector Assembly (CPS264) Directional Control	1	1
2	1463189	Connector	1	1
2	1463196	Connector (Secondary Lock, DTM PLU 4-Socket)	1	1
2	1463139	Terminal	4	4
3	4312824	Cap	2	2
4	. . . . .	Connector Assembly (CPS325) Premium Turn Signal	1	1
4	1493462	Connector (DTM PLU 3-Socket)	1	1
4	1493464	Connector (Secondary Lock)	1	1
4	1463139	Terminal	3	3
5	1500900	Clip	1	1
6	. . . . .	Connector Assembly (CPS330) Wiper Control	1	1
6	4275904	Connector	1	1
6	1493464	Connector (Secondary Lock)	1	1
6	1463139	Terminal	3	3
7	. . . . .	Connector Assembly (T288) Horn Com	1	1
7	2107952	Terminal	1	1
8	. . . . .	Connector Assembly (T287) Horn N/O	1	1
8	2107952	Terminal	1	1
9	. . . . .	Connector Assembly (CPS400) Key Switch	1	1
9	370728	Connector Body	1	1
9	1402908	Terminal	2	2
9	4270630	Terminal	4	4
10	. . . . .	Connector Assembly (CRP401) Push Button	1	1
10	4323561	Connector	1	1
10	4323562	Terminal	4	4
11	. . . . .	Connector Assembly (CPS162) Steer Sensor	..	1
11	1402865	Connector	..	1
11	1323576	Terminal	..	3
12	. . . . .	Connector Assembly (CPS680) Sync Steer Coil	..	1
12	1490242	Connector (2 Way)	..	1
12	1490243	Connector (Secondary Lock)	..	1
12	1330438	Terminal (Socket)	..	2
13	. . . . .	Connector Assembly (CRP529) To Chassis Harness	1	1
13	4168954	Connector	1	1
13	4168958	Terminal (Socket)	17	16
13	4655881	Plug (Cavity)	3	4
14	1708303	Clip	1	1
15	1616345	Strap Clamp	1	1
16	4140361	Cable Clip	3	3
17	1509890	Clip	1	1

©2026 HYSTER COMPANY

WIRE HARNESS (FIGURE 11-107)
DISPLAY

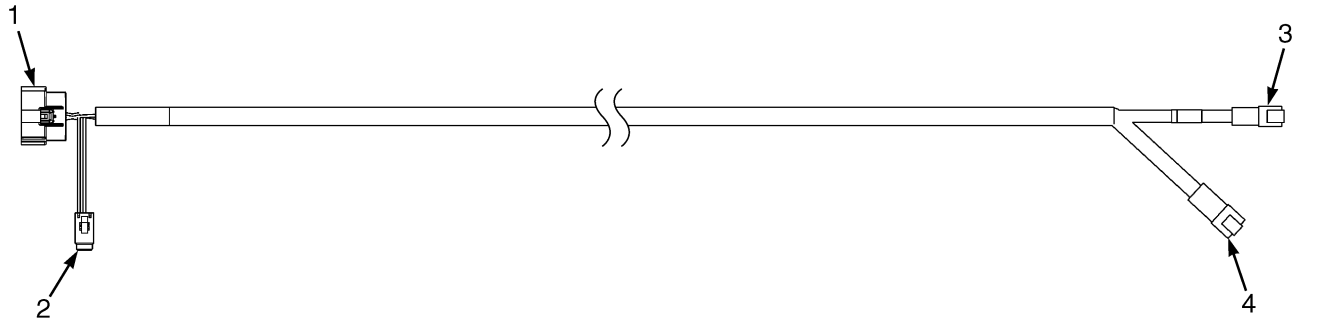

BP083205

KEY:
A: Base
B: Mid Keypad

ITEM	PART NO.	DESCRIPTION	QTY A	QTY B
	4702429	Wire Harness - Display w/o keyboard	1	..
	4736089	Wire Harness - Display w/o keyboard (Alternate Part)	1	..
	4702430	Wire Harness - Display w/ Keyboard	..	1
	4736088	Wire Harness - Display w/ Keyboard (Alternate Part)	..	1
1	. . . . .	Connector Assembly (CRS100) Display J1	1	1
1	4135139	Connector (MX150, Keying Option B)	1	1
1	4137207	Terminal (Socket)	14	14
1	4241954	Terminal (Socket) (Alternate Part)	14	14
1	4655881	Plug (Cavity)	6	6
2	. . . . .	Connector Assembly (CPS102) Keypad	..	1
2	1531973	Connector	..	1
2	1531974	Connector (Secondary Lock)	..	1
2	1463139	Terminal	..	6
3	. . . . .	Connector Assembly (CRP521) To Chassis	1	1
3	1561559	Connector (2 Pin)	1	1
3	1561755	Connector (Secondary Lock)	1	1
3	1463138	Terminal (Pin)	2	2
4	. . . . .	Connector Assembly (CRP520) To Chassis	1	1
4	1402923	Connector	1	1
4	1330417	Connector (Secondary Lock)	1	1
4	1330437	Terminal (Pin)	6	6

©2026 HYSTER COMPANY

NOTES

WIRE HARNESS (FIGURE 11-108)
DUAL THROTTLE PEDAL

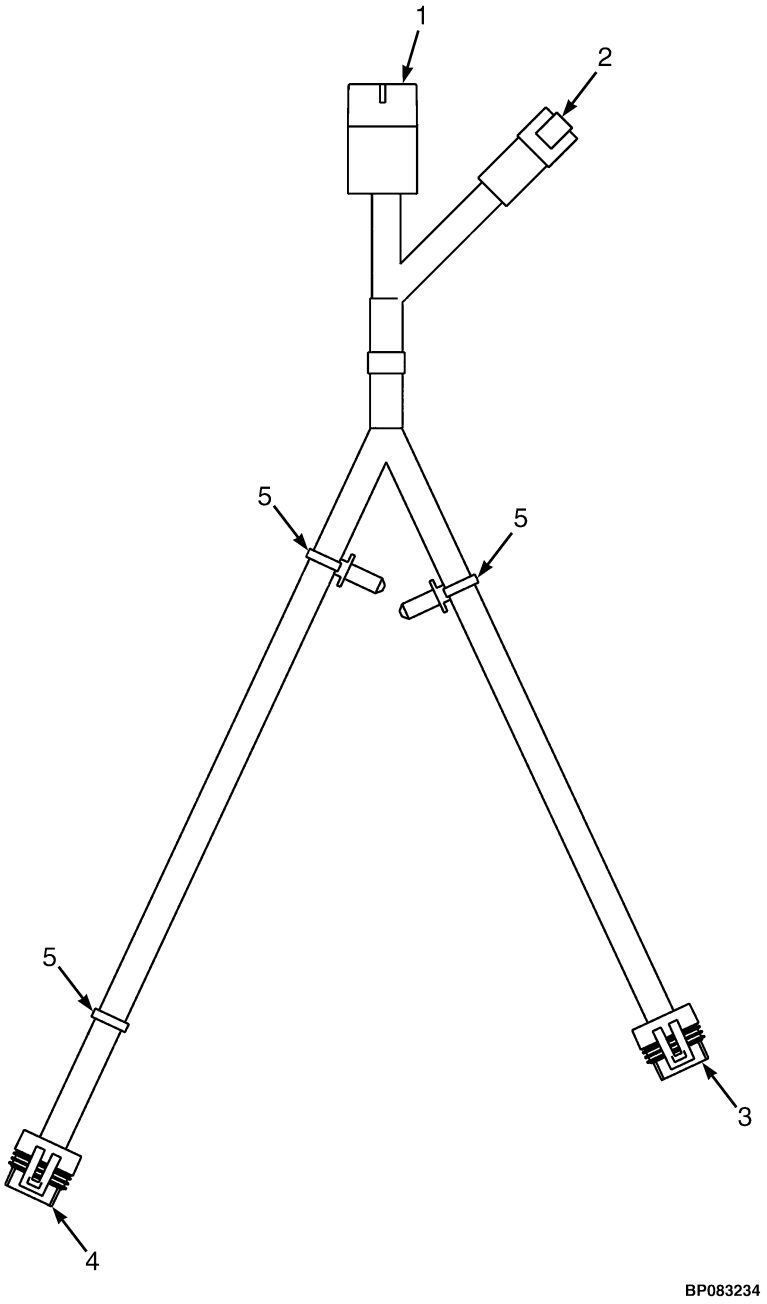

©2026 HYSTER COMPANY

WIRE HARNESS
DUAL THROTTLE PEDAL

ITEM	PART NO.	DESCRIPTION	QTY
	4686315	Wire Harness - Dual Pedal Jumper	1
	4737707	Wire Harness - Dual Pedal Jumper (Alternate Part)	1
1	. . . . .	Connector Assembly (CRP227) To Chassis Harness	1
1	4074472	Connector	1
1	4074473	Terminal	6
2	. . . . .	Connector Assembly (CRP577) To Chassis Harness	1
2	1402923	Connector	1
2	1330417	Connector (Secondary Lock)	1
2	1330437	Terminal (Pin)	6
3	. . . . .	Connector Assembly (CPS224) Brake Pedal Position Sensor	1
3	1525584	Connector	1
3	1323576	Terminal	6
4	. . . . .	Connector Assembly (CPS228) Accelerator Position Sensor	1
4	1525584	Connector	1
4	1323576	Terminal	6
5	4140361	Cable Clip	3

©2026 HYSTER COMPANY

WIRE HARNESS (FIGURE 11-109)
E-HYDRAULICS

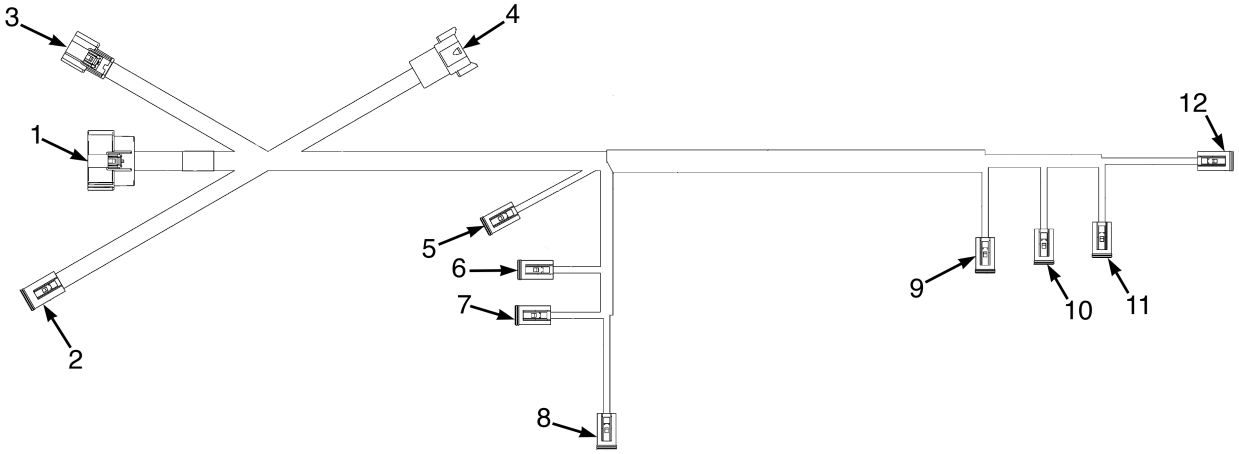

BP083512

©2026 HYSTER COMPANY

ITEM	PART NO.	DESCRIPTION	QTY
	4710908	Wire Harness (E-Hyd 4 Function)	1
	4710909	Wire Harness (E-Hyd 3 Function)	1
1	. . . . .	Connector Assembly (CRS31) O-Box1 O2	1
1	4135139	Connector (MX150, Keying Option B)	1
1	4137207	Terminal (Socket)	12
1	4655881	Plug (Cavity)	8
2	. . . . .	Connector Assembly (CPS690) LV Ride-Thru	1
2	1493430	Connector (6 Way Housing)	1
2	1529052	Connector (Secondary Lock)	1
2	1330438	Terminal (Socket)	5
2	1484377	Plug	1
3	. . . . .	Connector Assembly (CRS30) O-Box1 O1	1
3	4135137	Connector	1
3	4655880	Terminal (MX150, 14-16 AWG)	4
3	4137207	Terminal (Socket)	3
3	4655881	Plug (Cavity)	1
4	. . . . .	Connector Assembly (CRP534) To Chassis Harness	1
4	4176406	Connector	1
4	1330418	Connector (Receptacle, 8-Pin)	1
4	1330437	Terminal (Pin)	6
4	1484377	Plug	2
5	**a**	Connector Assembly (CPS628) Aux2 A	1
5	1490242	Connector (2 Way)	1
5	1490243	Connector (Secondary Lock)	1
5	1330438	Terminal (Socket)	2
6	. . . . .	Connector Assembly (CPS626) Aux1 A	1
6	1490242	Connector (2 Way)	1
6	1490243	Connector (Secondary Lock)	1
6	1330438	Terminal (Socket)	2
7	. . . . .	Connector Assembly (CPS625) Tilt FWD	1
7	1490242	Connector (2 Way)	1
7	1490243	Connector (Secondary Lock)	1
7	1330438	Terminal (Socket)	2
8	. . . . .	Connector Assembly (CPS623) Lower	1
8	1490242	Connector (2 Way)	1
8	1490243	Connector (Secondary Lock)	1
8	1330438	Terminal (Socket)	2
9	**a**	Connector Assembly (CPS629) Aux2 B	1
9	1490242	Connector (2 Way)	1
9	1490243	Connector (Secondary Lock)	1
9	1330438	Terminal (Socket)	2
10	. . . . .	Connector Assembly (CPS627) Aux1 B	1
10	1490242	Connector (2 Way)	1
10	1490243	Connector (Secondary Lock)	1
10	1330438	Terminal (Socket)	2
11	. . . . .	Connector Assembly (CPS624) Tilt Back	1
11	1490242	Connector (2 Way)	1
11	1490243	Connector (Secondary Lock)	1
11	1330438	Terminal (Socket)	2
12	. . . . .	Connector Assembly (CPS622) Lift	1
12	1490242	Connector (2 Way)	1
12	1490243	Connector (Secondary Lock)	1

ITEM	PART NO.	DESCRIPTION	QTY
12	1330438	Terminal (Socket)	2

FOOTNOTES:

a 4 Function Only

©2026 HYSTER COMPANY

WIRE HARNESS (FIGURE 11-110)
FRONT OHG

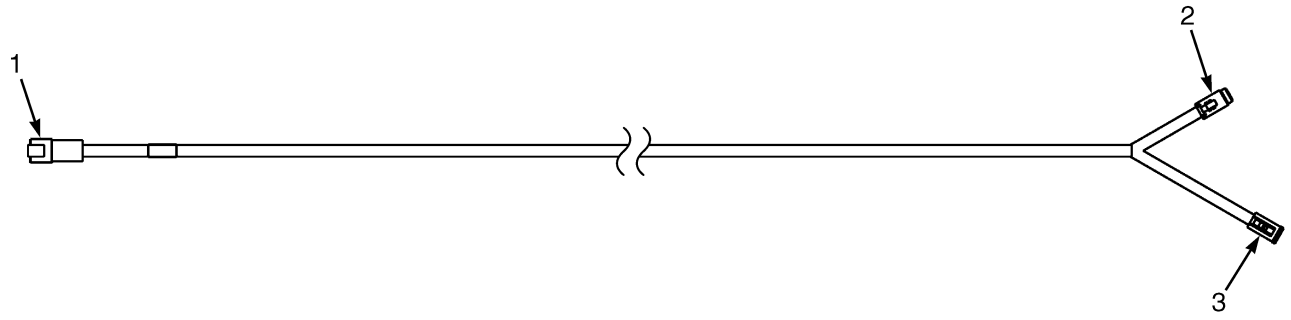

BP083204

ITEM	PART NO.	DESCRIPTION	QTY
	4682686	Wire Harness - Front OHG w/o Turn	2
	4682705	Wire Harness - Front OHG w/ Turn Signal	2
1	. . . . .	Connector Assembly (CRP540 RH) (CRP541 LH) To Chassis Harness	1
1	1489655	Connector (4 Way)	1
1	1330416	Connector (Secondary Lock)	1
1	1330437	Terminal (Pin)	4
2	**a**	Connector Assembly (CPS307 RH) (CPS312 LH) Marker Light	1
2	1463189	Connector	1
2	1463196	Connector (Secondary Lock, DTM PLU 4-Socket)	1
2	1463139	Terminal	3
2	1484377	Plug	1
3	. . . . .	Connector Assembly (CPS300 RH) (CPS301 LH) Work Light	1
3	1490242	Connector (2 Way)	1
3	1490243	Connector (Secondary Lock)	1
3	1330438	Terminal (Socket)	2

FOOTNOTES:

a w/ front turn lights.

©2026 HYSTER COMPANY

WIRE HARNESS (FIGURE 11-111)
FUEL PUMP

ITEM	PART NO.	DESCRIPTION	QTY
	4684916	Wire Harness	1
1	. . . . .	Connector Assembly (CRS1087A) Fuel Lift Pump	1
1	4258245	Connector	1
1	4258244	Connector Lock	1
1	4099902	Terminal	2
2	. . . . .	Connector Assembly (T1089) Fuel Pump Negative	1
2	3032869	Terminal	1
3	. . . . .	Connector Assembly (T1088) Fuel Pump Positive	1
3	1310142	Terminal	1

©2026 HYSTER COMPANY

WIRE HARNESS (FIGURE 11-112)
HYDRAULIC FAN DRIVE

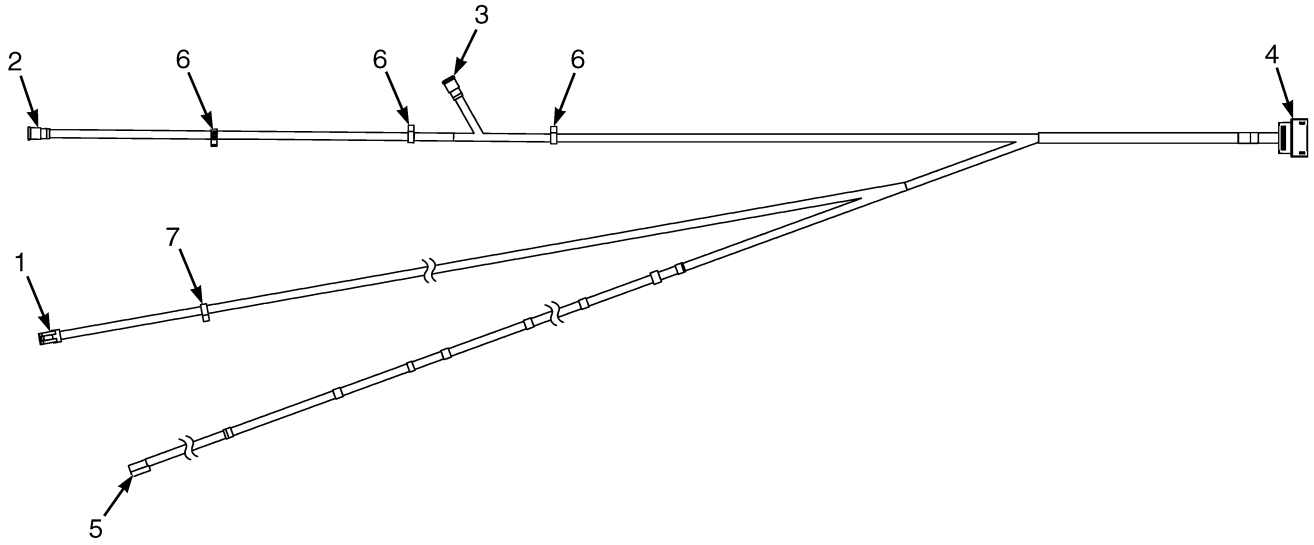

BP083105

KEY:
A: Aux 2 HFD w/ CAC
B: Aux 2 HFD w/o CAC
C: Aux 2 Contactor
D: Aux 2 HFD w/ Contactor
E: Aux 2 HFD w/ CAC and Contactor

ITEM	PART NO.	DESCRIPTION	QTY A	B	C	D	E
	4712485	Wire Harness - Aux 2 HFD w/ CAC	1	..	..	..	..
	4712486	Wire Harness - Aux 2 HFD w/o CAC	..	1	..	..	..
	4712487	Wire Harness - Aux 2 Contactor	..	..	1	..	..
	4712488	Wire Harness - Aux 2 HFD w/ Contactor	..	..	..	1	..
	4712489	Wire Harness - Aux 2 HFD w/ CAC and Contactor	..	..	..	..	1
1	. . . . .	Connector Assemnbly (CPS647) Air Cooler Temp Sensor	1	..	..	..	1
1	1323586	Connector	1	..	..	..	1
1	1323576	Terminal	2	..	..	..	2
2	. . . . .	Connector Assemnbly (CPS646) HFD B	1	1	..	1	1
2	4168181	Connector	1	1	..	1	1
2	1490243	Connector (Secondary Lock)	1	1	..	1	1
2	1330438	Terminal (Socket)	2	2	..	2	2
3	. . . . .	Connector Assembly (CPS645) HFD A	1	1	..	1	1
3	4168181	Connector	1	1	..	1	1
3	1490243	Connector (Secondary Lock)	1	1	..	1	1
3	1330438	Terminal (Socket)	2	2	..	2	2
4	. . . . .	Connector Assemnbly (CRS14) iBox 2 (☞Figure 11-22, ☞Figure 11-21)	1	1	1	1	1
4	4135138	Connector (MX150, Keying Option A)	1	1	1	1	1
4	4137207	Terminal (Socket)	6	5	4	6	7

KEY:
A: Aux 2 HFD w/ CAC
B: Aux 2 HFD w/o CAC
C: Aux 2 Contactor
D: Aux 2 HFD w/ Contactor
E: Aux 2 HFD w/ CAC and Contactor

			QTY				
ITEM	**PART NO.**	**DESCRIPTION**	**A**	**B**	**C**	**D**	**E**
4	4655881	Plug (Cavity)	14	15	16	14	13
5	. . . . .	Connector Assemnbly (CPS386) Contactor Coil	..	..	..	1	1
5	1537135	Connector Body	..	..	..	1	1
5	1676212	Terminal	..	..	..	2	2
6	1509888	Clip (Conduit)	3	3	..	3	3
7	1509888	Clip (Conduit)	1	..	..	..	1

See Service Manual for service procedures.
©2026 HYSTER COMPANY

NOTES

WIRE HARNESS (FIGURE 11-113)
HYDRAULIC FAN DRIVE — ALTERNATE PART

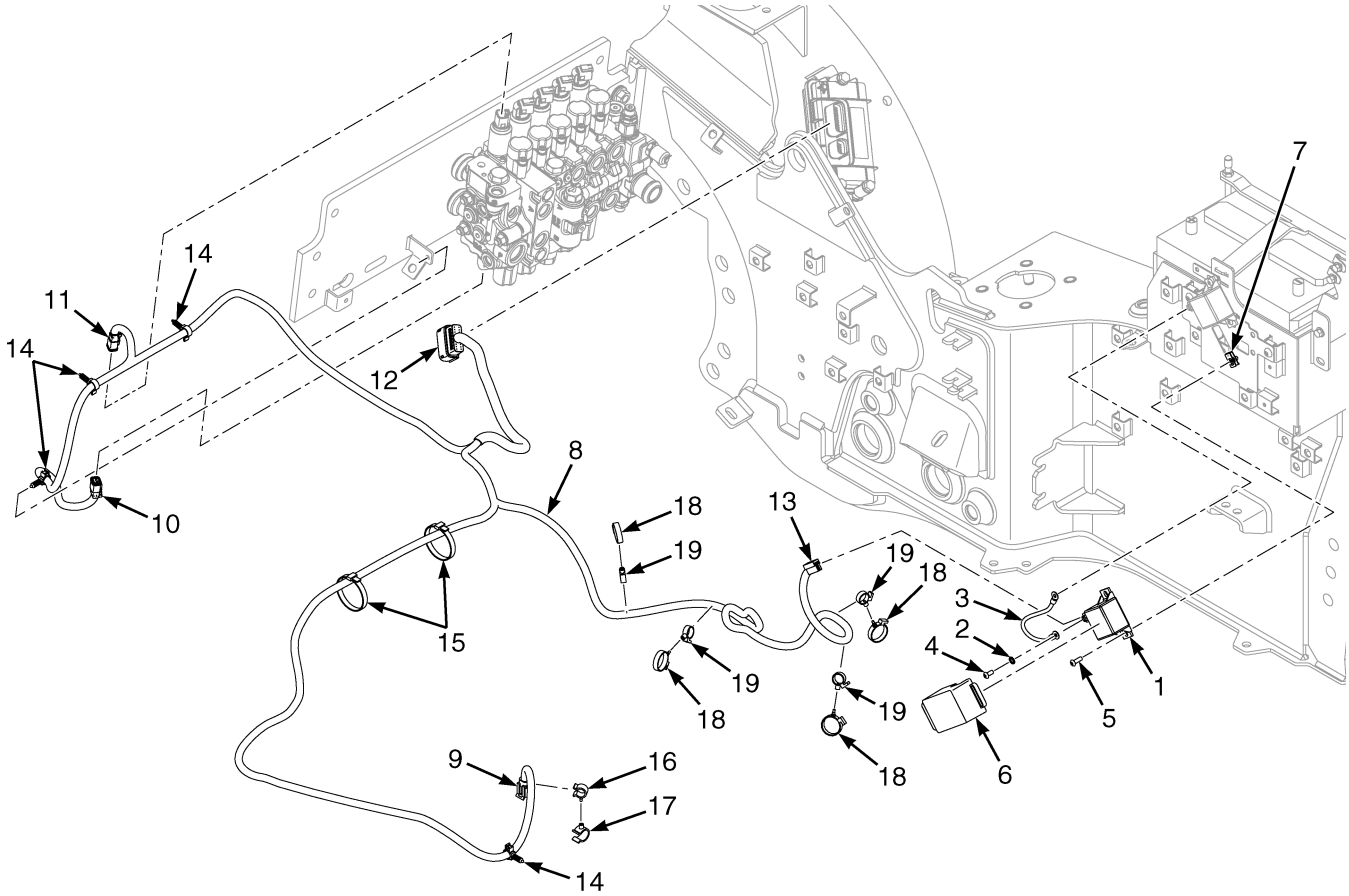

©2026 HYSTER COMPANY

WIRE HARNESS

HYDRAULIC FAN DRIVE – ALTERNATE PART

KEY:
A: Aux 2 HFD w/ CAC
B: Aux 2 HFD w/o CAC
C: Aux 2 Contactor
D: Aux 2 HFD w/ Contactor
E: Aux 2 HFD w/ CAC and Contactor

			QTY				
ITEM	**PART NO.**	**DESCRIPTION**	**A**	**B**	**C**	**D**	**E**
1	4284399	Relay (High Current 75 Amp)	..	..	1	1	1
2	296378	Washer	..	..	2	2	2
3	4712748	Wire Harness (Aux Harness Jumper)	..	..	1	1	1
3	148613	E-Ring	..	..	2	2	2
4	4315811	Screw	..	..	2	2	2
5	4312482	Screw	..	..	2	2	2
6	4319909	Boot (Relay)	..	..	1	1	1
7	4019192	Clip , Nut	..	..	2	2	2
8	4712485	Wire Harness - Aux 2 HFD w/ CAC	1	..	..	..	..
8	4712486	Wire Harness - Aux 2 HFD w/o CAC	..	1	..	..	..
8	4712487	Wire Harness - Aux 2 Contactor	..	..	1	..	..
8	4712488	Wire Harness - Aux 2 HFD w/ Contactor	..	..	..	1	..
8	4712489	Wire Harness - Aux 2 HFD w/ CAC and Contactor	..	..	..	..	1
9	. . . . .	Connector Assembly (CPS647) Air Cooler Temp Sensor	1	..	..	..	1
9	1323586	Connector	1	..	..	..	1
9	1323576	Terminal	2	..	..	..	2
10	. . . . .	Connector Assembly (CPS646) HFD B	1	1	..	1	1
10	4168181	Connector	1	1	..	1	1
10	1490243	Connector (Secondary Lock)	1	1	..	1	1
10	1330438	Terminal (Socket)	2	2	..	2	2
11	. . . . .	Connector Assembly (CPS645) HFD A	1	1	..	1	1
11	4168181	Connector	1	1	..	1	1
11	1490243	Connector (Secondary Lock)	1	1	..	1	1
11	1330438	Terminal (Socket)	2	2	..	2	2
12	. . . . .	Connector Assembly (CRS14) iBox 2 (☞Figure 11-22, ☞Figure 11-21)	1	1	1	1	1
12	4135138	Connector (MX150, Keying Option A)	1	1	1	1	1
12	4137207	Terminal (Socket)	6	5	4	6	7
12	4655881	Plug (Cavity)	14	15	16	14	13
13	. . . . .	Connector Assembly (CPS386) Contactor Coil	..	..	1	1	1
13	1537135	Connector Body	..	..	1	1	1
13	233141	Terminal (Receptacle)	..	..	2	2	2
14	1509888	Clip (Conduit)	4	3	..	3	4
15	129563	Strap Clamp	2	..	..	..	2
16	1502055	Clamp (Swivel)	1	..	..	..	1
17	1606544	Clamp (Swivel)	1	..	..	..	1
18	4160428	Clamp (Swivel Tie)	..	..	4	4	4
19	1582605	Clamp	..	..	4	4	4

WIRE HARNESS (FIGURE 11-114)
HYDROSTATIC TRANSMISSION

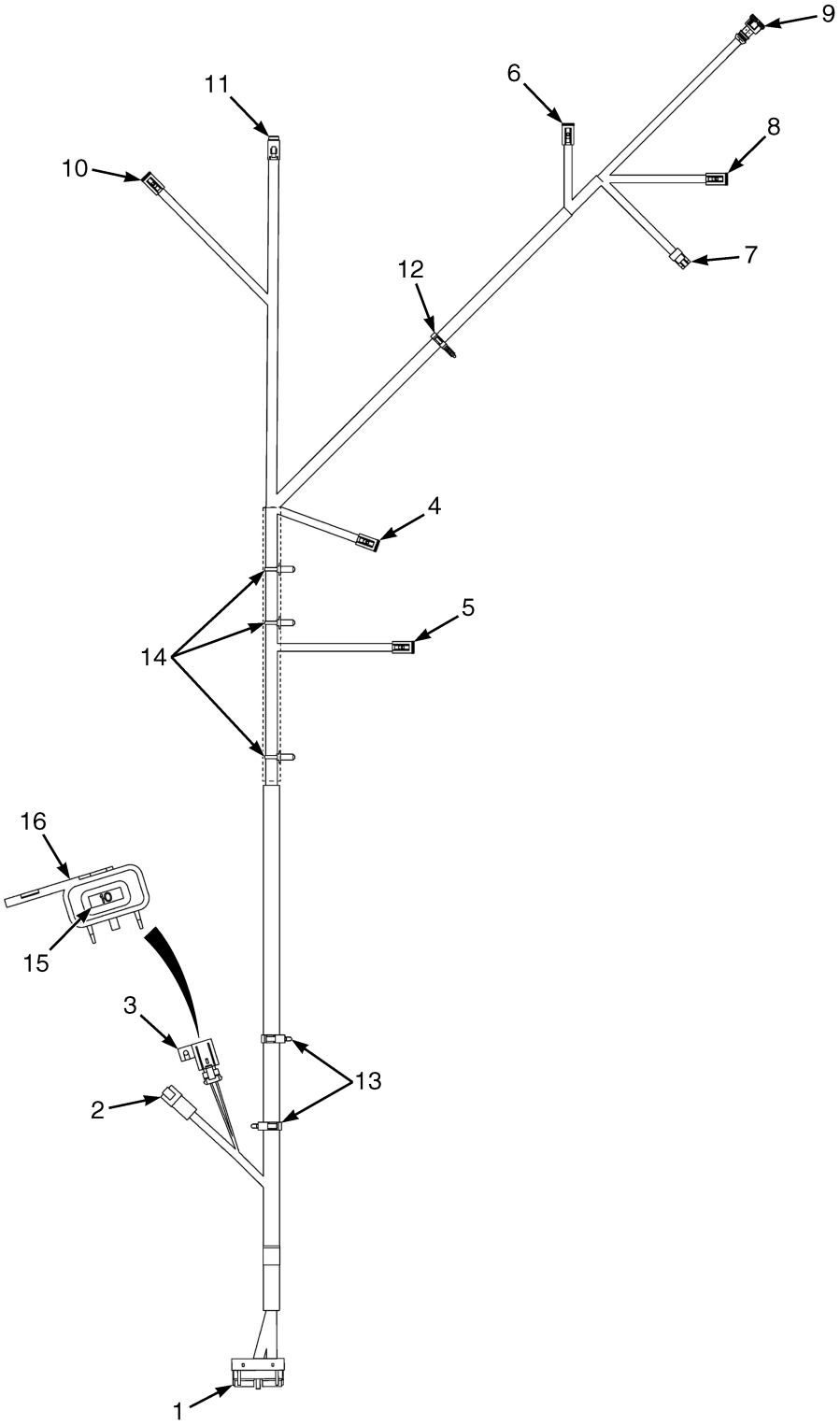

BP083762

©2026 HYSTER COMPANY

WIRE HARNESS
HYDROSTATIC TRANSMISSION

ITEM	PART NO.	DESCRIPTION	QTY
	4707525	Wire Harness (Transmission - HST)	1
1	. . . . .	Connector Assembly (CPS1451) Transmission Controller	1
1	1698666	Connector (50-Way Socket Housing)	1
1	1463139	Terminal	23
1	1484377	Plug	27
2	. . . . .	Connector Assembly (CRP532) To Chassis Harness	1
2	1489655	Connector (4 Way)	1
2	1330416	Connector (Secondary Lock)	1
2	1330437	Terminal (Pin)	4
3	. . . . .	Connector Assembly (CRP1465) Fuse Holder	1
3	1329152	Plug	1
3	1329151	Secondary Lock	1
3	1330281	Terminal	2
3	1402888	Seal (Purple)	2
4	. . . . .	Connector Assembly (CPS1456) Electronic Displacement Control Pump C2 Reverse	1
4	1490242	Connector (2 Way)	1
4	1490243	Connector (Secondary Lock)	1
4	1330438	Terminal (Socket)	2
5	. . . . .	Connector Assembly (CPS1455) Electronic Displacement Control Pump C1 Forward	1
5	1490242	Connector (2 Way)	1
5	1490243	Connector (Secondary Lock)	1
5	1330438	Terminal (Socket)	2
6	. . . . .	Connector Assembly (CPS634) Service Brake Booster Coil	1
6	1490242	Connector (2 Way)	1
6	1490243	Connector (Secondary Lock)	1
6	1330438	Terminal (Socket)	2
7	. . . . .	Connector Assembly (CPS633) Service Brake Pressure Sensor	1
7	1327957	Connector (E-Fitting Connector Plug)	1
7	1532571	Terminal (Socket)	3
8	. . . . .	Connector Assembly (CPS635) Service Brake Coil	1
8	1490242	Connector (2 Way)	1
8	1490243	Connector (Secondary Lock)	1
8	1330438	Terminal (Socket)	2
9	. . . . .	Connector Assembly (CPS640) Axle Oil Temperature Sensor	1
9	1531162	Connector	1
9	1402814	Terminal (Socket)	2
9	1562649	Seal	2
10	. . . . .	Connector Assembly (CPS1457) Electronic Displacement Control Pump	1
10	1490242	Connector (2 Way)	1
10	1490243	Connector (Secondary Lock)	1
10	1330438	Terminal (Socket)	2
11	. . . . .	Connector Assembly (CPS1452) Hydromotor Speed and Temperature Sensor	1
11	1531973	Connector	1
11	1531974	Connector (Secondary Lock)	1
11	1463139	Terminal	5
11	1484377	Plug	1
12	1509890	Clip	1

©2026 HYSTER COMPANY

WIRE HARNESS
HYDROSTATIC TRANSMISSION

ITEM	PART NO.	DESCRIPTION	QTY
13	1534329	Clip	2
14	4140361	Cable Clip	3
15	1498046	Fuse (10 Amp)	1
16	4294132	Cover	1

©2026 HYSTER COMPANY

WIRE HARNESS (FIGURE 11-115)
JUMPER — SEAT COMPRESSOR

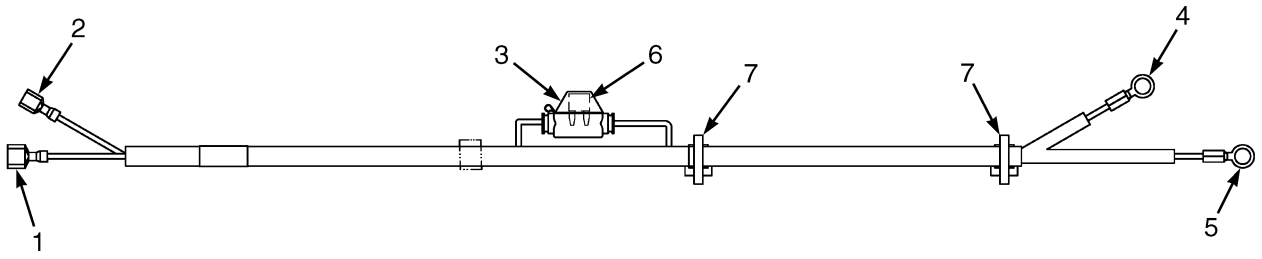

BP083394

ITEM	PART NO.	DESCRIPTION	QTY
	4703442	Wire Harness - Seat Compressor Jumper	1
1	. . . . .	Connector Assembly (T550) To Chassis Harness (+)	1
1	1310143	Terminal (Male)	1
2	. . . . .	Connector Assembly (T551) To Chassis Harness (-)	1
2	1310142	Terminal	1
3	. . . . .	Connector Assembly (CRS538) Compressor Fuse	1
3	1602431	Fuse Holder	1
4	. . . . .	Connector Assembly (T480) Battery Positive	1
4	1655194	Ring Terminal	1
5	. . . . .	Connector Assembly (T481) Battery Negative	1
5	1655194	Ring Terminal	1
6	1528132	Fuse (20 Amp)	1
7	4168707	Retainer	2

©2026 HYSTER COMPANY

WIRE HARNESS (FIGURE 11-116)

LIFT HEIGHT — BASIC

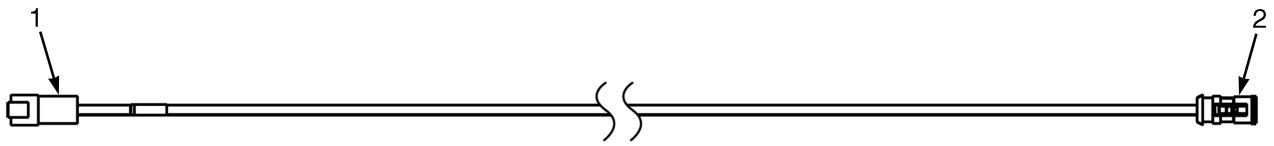

BP083156

ITEM	PART NO.	DESCRIPTION	QTY
	4695588	Wire Harness - Lift Height, OAS Level 1	1
1	. . . . .	Connector Assembly (CRP586) To Mast Interconnect Harness	1
1	1489655	Connector (4 Way)	1
1	1330416	Connector (Secondary Lock)	1
1	1330437	Terminal (Pin)	3
1	1484377	Plug	1
2	. . . . .	Connector Assembly (CPS253) Fork Height Sensor	1
2	4276170	Connector	1
2	1463194	Connector (Secondary Lock)	1
2	1330438	Terminal (Socket)	3

See Service Manual for service procedures.
©2026 HYSTER COMPANY

WIRE HARNESS (FIGURE 11-117)
LOWER MAST WORK LIGHTS — 2 LIGHTS

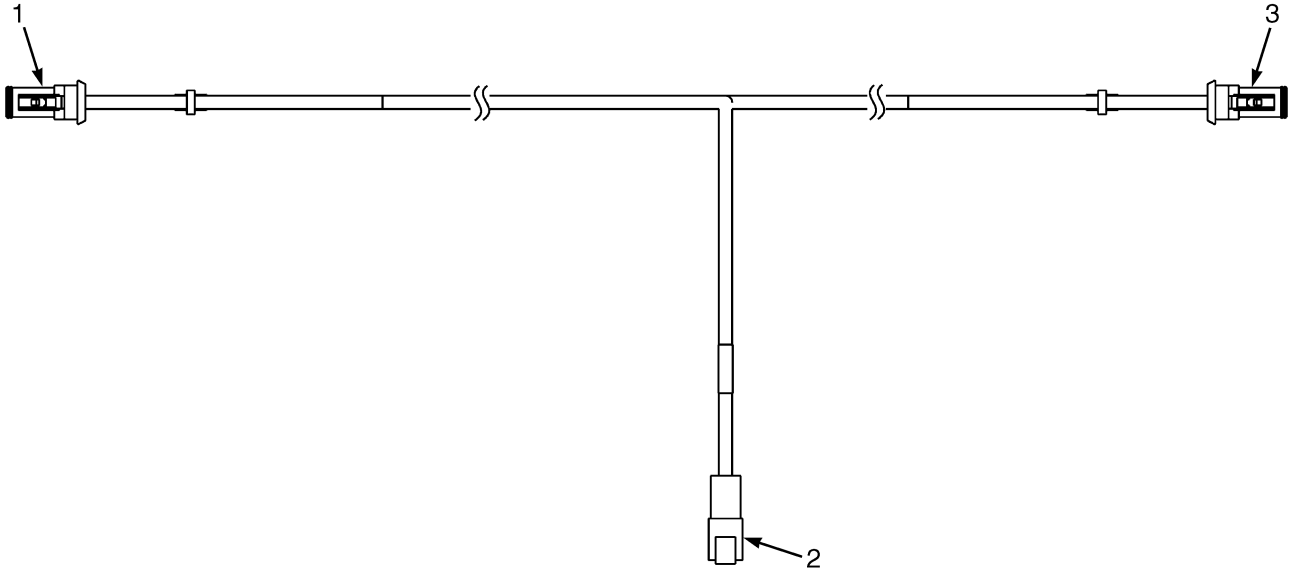

BP083158

ITEM	PART NO.	DESCRIPTION	QTY
	4690527	Wire Harness - Mast Lights, Lower (2 Lights)	1
1	. . . . .	Connector Assembly (CPS304/CPS569) LH Mast Light	1
1	4276171	Connector	1
1	1490243	Connector (Secondary Lock)	1
1	1330438	Terminal (Socket)	2
2	. . . . .	Connector Assembly (CRP545) To Mast Interconnect Harness	1
2	1493465	Connector (2 Pin)	1
2	1330414	Connector (Secondary Lock)	1
2	1330437	Terminal (Pin)	2
3	. . . . .	Connector Assembly (CPS305/CPS566) RH Mast Light	1
3	4276171	Connector	1
3	1490243	Connector (Secondary Lock)	1
3	1330438	Terminal (Socket)	2

©2026 HYSTER COMPANY

WIRE HARNESS (FIGURE 11-118)
LOWER MAST WORK LIGHTS — 4 LIGHTS

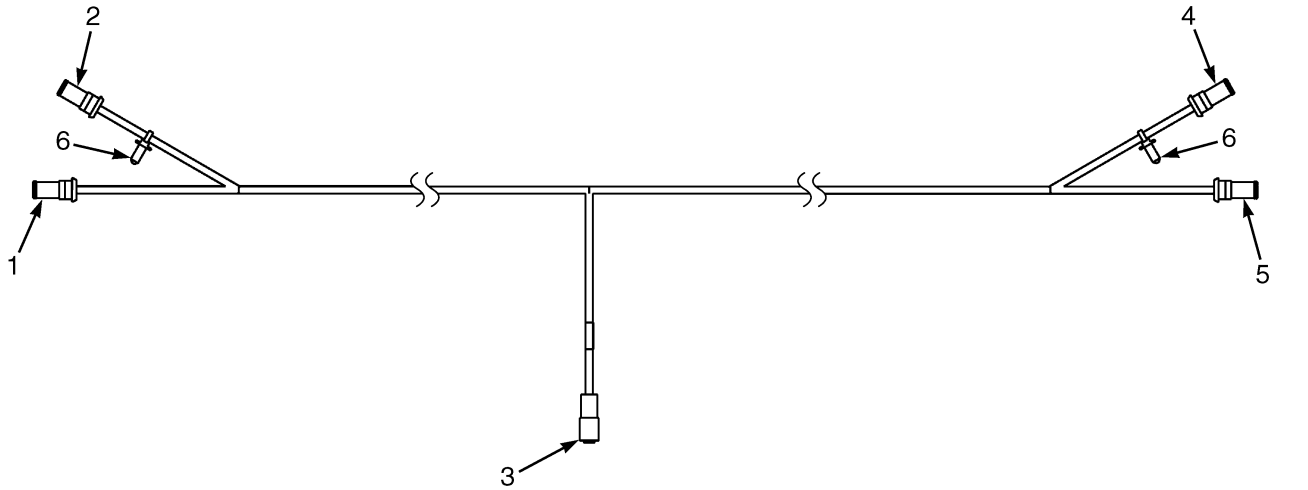

BP083159

ITEM	PART NO.	DESCRIPTION	QTY
	4693223	Wire Harness - Mast Lights, Lower (4 Lights)	1
1	. . . . .	Connector Assembly (CPS569) LH Upper Harness Extension	1
1	4276171	Connector	1
1	1490243	Connector (Secondary Lock)	1
1	1330438	Terminal (Socket)	2
2	. . . . .	Connector Assembly (CPS304) LH Lower Mast Light	1
2	4276171	Connector	1
2	1490243	Connector (Secondary Lock)	1
2	1330438	Terminal (Socket)	2
3	. . . . .	Connector Assembly (CRP545) To Mast Interconnect Harness	1
3	1493465	Connector (2 Pin)	1
3	1330414	Connector (Secondary Lock)	1
3	1330437	Terminal (Pin)	2
4	. . . . .	Connector Assembly (CPS305) RH Lower Mast Light	1
4	4276171	Connector	1
4	1490243	Connector (Secondary Lock)	1
4	1330438	Terminal (Socket)	2
5	. . . . .	Connector Assembly (CPS566) RH Upper Harness Extension	1
5	4276171	Connector	1
5	1490243	Connector (Secondary Lock)	1
5	1330438	Terminal (Socket)	2
6	4140361	Cable Clip	2

©2026 HYSTER COMPANY

WIRE HARNESS (FIGURE 11-119)
MAINTENANCE CHARGE

BP083875

ITEM	PART NO.	DESCRIPTION	QTY
	4695221	Wire Harness - Maintenance Charge	1
1	. . . . .	Connector Assembly (CRP501) To CAN Diagnostic Interface	1
1	4214064	Connector	1
1	1330438	Terminal (Socket)	2
1	1484377	Plug	7
2	. . . . .	Connector Assembly (CRS491) Charger Fuse Holder	1
2	1602431	Fuse Holder	1
2	1498046	Fuse (10 Amp)	1
3	. . . . .	Connector Assembly (C490) Battery Tender Connection	1
3	4276165	Connector	1

©2026 HYSTER COMPANY

WIRE HARNESS (FIGURE 11-120)
M-HYD SPS JUMPER (BASE

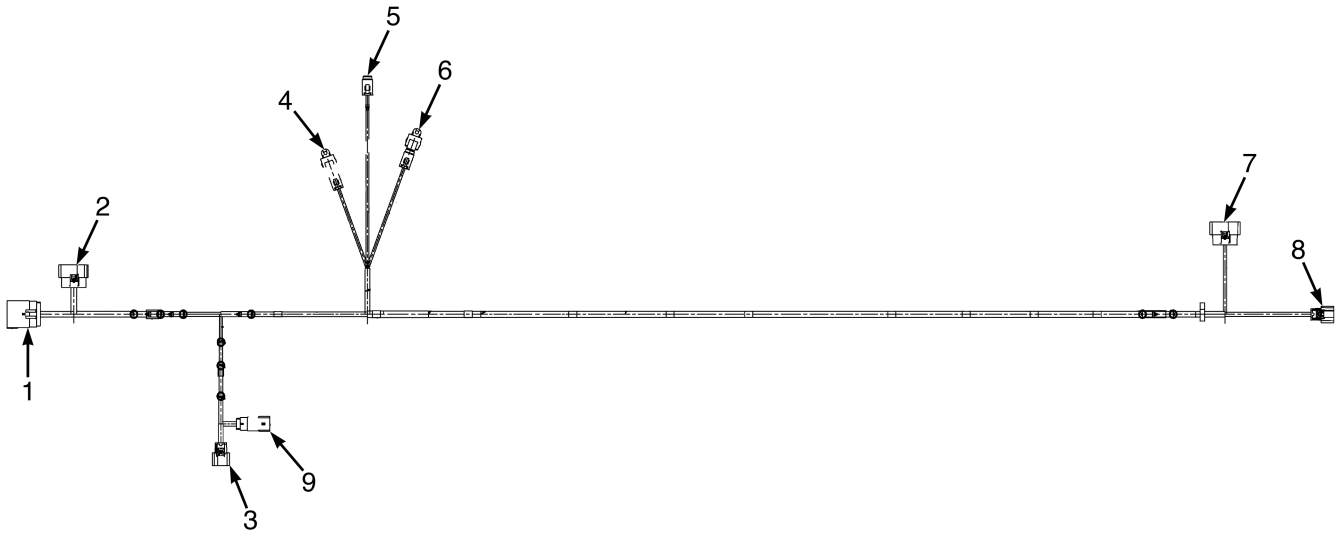

BP084234

ITEM	PART NO.	DESCRIPTION	QTY
	4728711	Wire Harness - M-Hyd SPS Jumper (Base)	1
1	. . . . .	Connector Assembly (CPP4 to Chassis Harness VSM V4)	1
1	4168956	Connector	1
1	4168958	Terminal (Socket)	12
1	4655881	Plug (Cavity)	8
2	. . . . .	Connector Assembly (CRS4X VSM V4)	1
2	4135140	Connector (MX150, Keying Option C)	1
2	4137207	Terminal (Socket)	18
2	4331375	Plug	2
3	. . . . .	Connector Assembly (CRS1X VSM V1)	1
3	4135136	Connector	1
3	4137207	Terminal (Socket)	6
3	4655880	Terminal (MX150, 14-16 AWG)	2
4	. . . . .	Connector Assembly (CPS695 AUX2 Position)	1
4	1493462	Connector (DTM PLU 3-Socket)	1
4	1493464	Connector (Secondary Lock)	1
4	1463141	Terminal (Socket)	3
5	. . . . .	Connector Assembly (CPS693 Lift/Lower Spool Position)	1
5	1493462	Connector (DTM PLU 3-Socket)	1
5	1493464	Connector (Secondary Lock)	1
5	1463141	Terminal (Socket)	3
6	. . . . .	Connector Assembly (CPS694 AUX1 Spool Position)	1
6	1493462	Connector (DTM PLU 3-Socket)	1
6	1493464	Connector (Secondary Lock)	1
6	1463141	Terminal (Socket)	3
7	. . . . .	Connector Assembly (CRS12X iBox 1 I2) (☞Figure 11-22, ☞Figure 11-21)..	1

See Service Manual for service procedures.
©2026 HYSTER COMPANY

ITEM	PART NO.	DESCRIPTION	QTY
7	4135138	Connector (MX150, Keying Option A)	1
7	4137207	Terminal (Socket)	6
7	4331375	Plug	14
8	. . . . .	Connector Assembly (CRS11X iBox1 I1) (☞Figure 11-22, ☞Figure 11-21)	1
8	4135137	Connector	1
8	4137207	Terminal (Socket)	5
8	4655880	Terminal (MX150, 14-16 AWG)	2
8	4331375	Plug	1
9	. . . . .	Connector Assembly (CPP1 to Chassis Harness VSM V1)	1
9	4168952	Connector	1
9	4168958	Terminal (Socket)	8

WIRE HARNESS (FIGURE 11-121)
M-HYD SPS JUMPER (MID/FULL

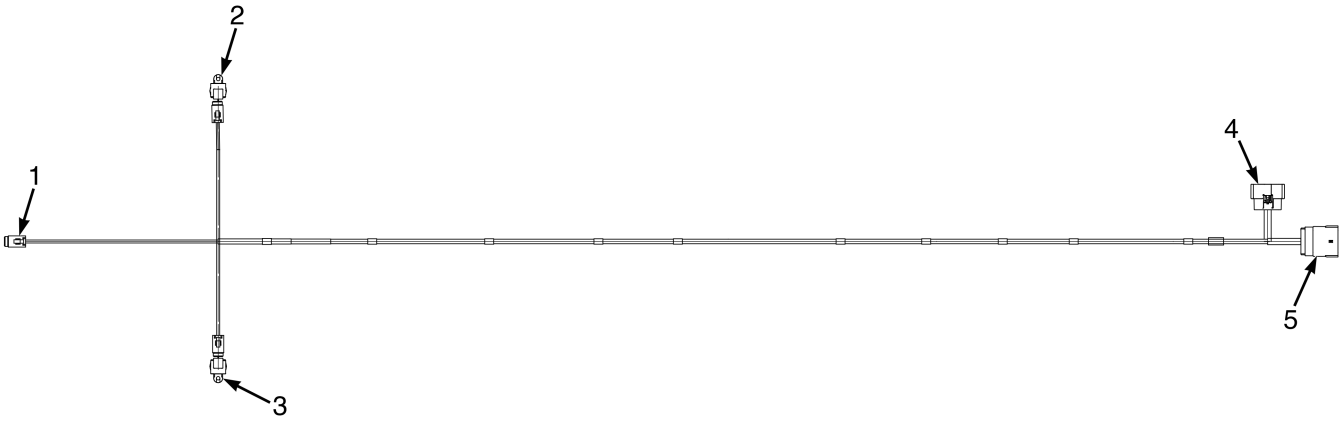

BP084233

ITEM	PART NO.	DESCRIPTION	QTY
	4728710	Wire Harness - M-Hyd SPS Jumper (Mid/Full)	1
1	. . . . .	Connector Assembly (CPS693 Lift/Lower Spool Position)	1
1	1493462	Connector (DTM PLU 3-Socket)	1
1	1493464	Connector (Secondary Lock)	1
1	1463141	Terminal (Socket)	3
2	. . . . .	Connector Assembly (CPS694 AUX1 Spool Position)	1
2	1493462	Connector (DTM PLU 3-Socket)	1
2	1493464	Connector (Secondary Lock)	1
2	1463141	Terminal (Socket)	3
2	4312824	Cap	1
3	. . . . .	Connector Assembly (CPS695 AUX2 Spool Position)	1
3	1493462	Connector (DTM PLU 3-Socket)	1
3	1493464	Connector (Secondary Lock)	1
3	1463141	Terminal (Socket)	3
3	4312824	Cap	1
4	. . . . .	Connector Assembly (CRS12X iBox1 I2)	1
4	4135138	Connector (MX150, Keying Option A)	1
4	4137207	Terminal (Socket)	15
4	4331375	Plug	4
4	4655880	Terminal (MX150, 14-16 AWG)	1
5	. . . . .	Connector Assembly (CPS12X iBox1 I2 to Chassis) (☞Figure 11-22, ☞Figure 11-21)	1
5	4168954	Connector	1
5	4168958	Terminal (Socket)	12
5	4655881	Plug (Cavity)	7

See Service Manual for service procedures.
©2026 HYSTER COMPANY

ITEM	PART NO.	DESCRIPTION	QTY
5	4168959	Terminal (Socket)	1

©2026 HYSTER COMPANY

WIRE HARNESS (FIGURE 11-122)
PEDESTRIAN AWARENESS LIGHT

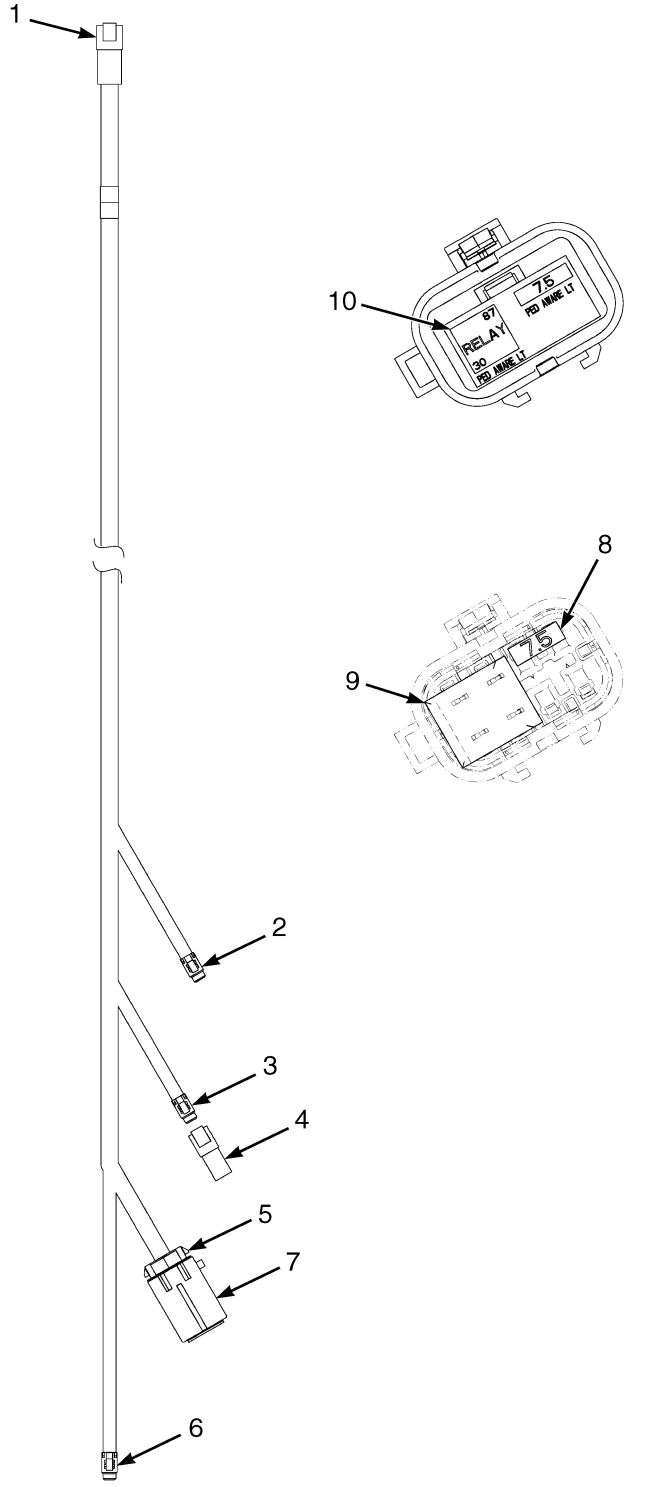

©2026 HYSTER COMPANY

WIRE HARNESS
PEDESTRIAN AWARENESS LIGHT

ITEM	PART NO.	DESCRIPTION	QTY
	4698341	Wire Harness - Pedestrian Awareness Line	1
1	. . . . .	Connector Assembly (CRP571) To Chassis	1
1	1520639	Connector	1
1	1330416	Connector (Secondary Lock)	1
1	1330437	Terminal (Pin)	4
2	. . . . .	Connector Assembly (CPS318) Ped Light RH	1
2	1484557	Connector (2 Socket)	1
2	1484558	Connector (Secondary Lock)	1
2	1463139	Terminal	2
3	. . . . .	Connector Assembly (CPS319) Ped Light RR	1
3	1484557	Connector (2 Socket)	1
3	1484558	Connector (Secondary Lock)	1
3	1463139	Terminal	2
4	. . . . .	Connector Assembly (CRP319) End Cap	1
4	1561559	Connector (2 Pin)	1
4	1561755	Connector (Secondary Lock)	1
4	1484377	Plug	2
5	. . . . .	Connector Assembly (CPS592) Ped Light PDM	1
5	1521183	Connector	1
5	1521188	Lock	1
5	1330281	Terminal	6
5	1327164	Terminator	2
5	1402888	Seal (Purple)	6
6	. . . . .	Connector Assembly (CPS317) Ped Light LH	1
6	1484557	Connector (2 Socket)	1
6	1484558	Connector (Secondary Lock)	1
6	1463139	Terminal	2
7	4045422	Cover	1
8	1498045	Fuse (7.5 Amp)	1
9	1528315	Relay (20 Amp)	1
10	4698503	Label -8 Pin PDM	1

©2026 HYSTER COMPANY

WIRE HARNESS (FIGURE 11-123)

PARKING BRAKE — WET BRAKE ACTUATION (→ 9/2024)

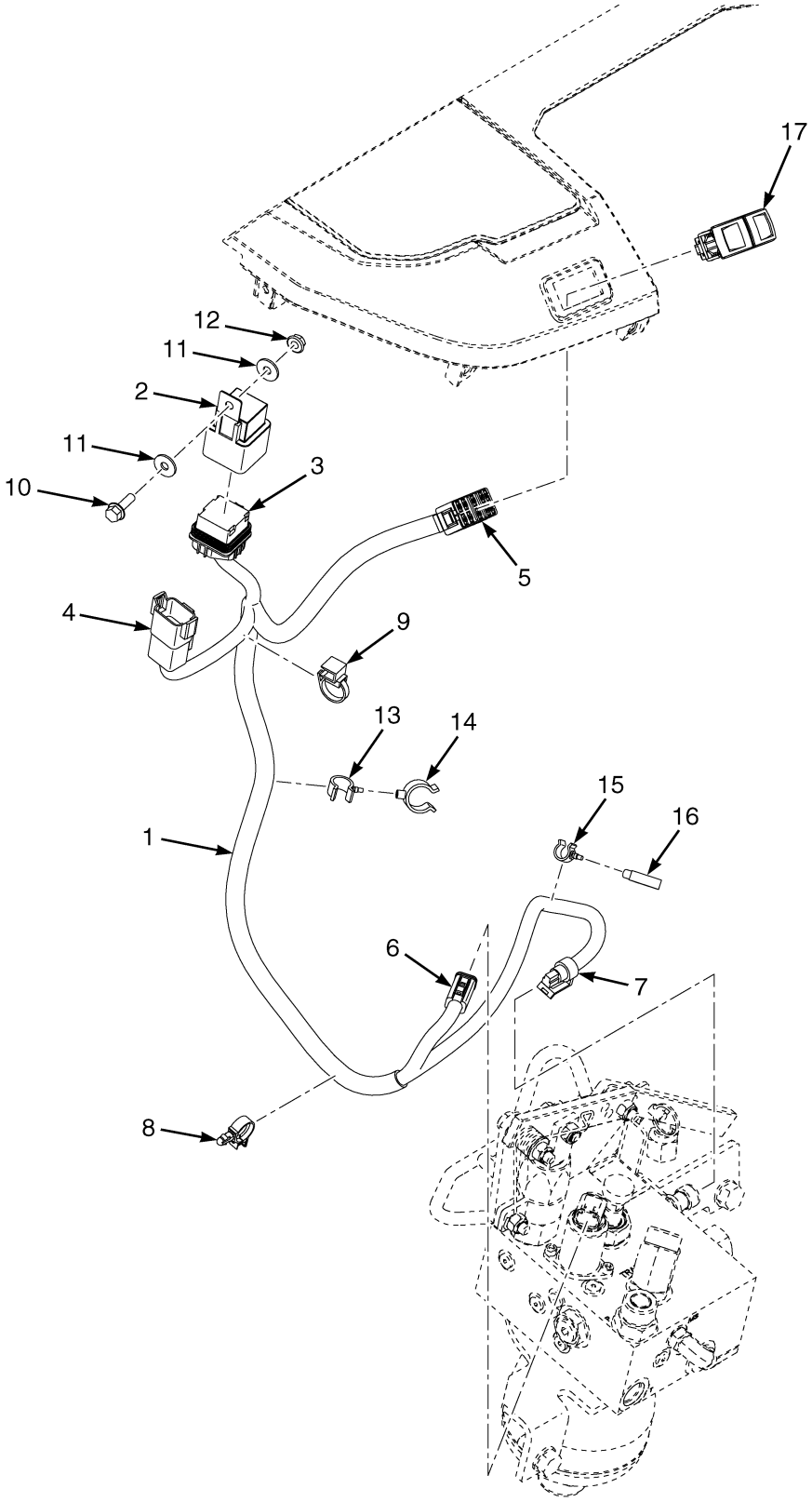

©2026 HYSTER COMPANY

WIRE HARNESS

PARKING BRAKE – WET BRAKE ACTUATION (→ 9/2024)

ITEM	PART NO.	DESCRIPTION	QTY
1	4702114	Wire Harness - WBA Parking Brake	1
2	4039364	Relay	1
3	. . . . .	Connector Assembly (CPS173) WBA LED Control Relay	1
3	4030503	Connector	1
3	1354204	Terminal	4
3	1323581	Plug	1
4	. . . . .	Connector Assembly (CRP574) To Chassis Harness	1
4	1623050	Housing (Receptacle, 8-Pin)	1
4	1330418	Connector (Receptacle, 8-Pin)	1
4	1330437	Terminal (Pin)	8
5	. . . . .	Connector Assembly (CPS172) To WBA Switch	1
5	1484555	Connector Body (10-Way)	1
5	4178577	Terminal	6
6	. . . . .	Connector Assembly (CPS632) WBA Manifold Solenoid	1
6	1490242	Connector (2 Way)	1
6	1490243	Connector (Secondary Lock)	1
6	1330438	Terminal (Socket)	2
7	. . . . .	Connector Assembly (CPS631) WBA Pressure Sensor	1
7	1327957	Connector (E-Fitting Connector Plug)	1
7	1532571	Terminal (Socket)	3
8	1500901	Clip (Conduit)	1
9	4168707	Retainer	1
10	1527877	Capscrew	1
11	1476421	Washer	2
12	~~1307884~~		
	1514429	Nut	1
13	1502055	Clamp (Swivel)	1
14	1502059	Clamp (Swivel)	1
15	1573549	Clamp (Swivel)	1
16	1582605	Clamp	1
17	4696717	Switch - Parking Brake, Rocker Switch	1

©2026 HYSTER COMPANY

WIRE HARNESS (FIGURE 11-124)

PARKING BRAKE — WET BRAKE ACTUATION (9/2024 ↔ 12/2024)

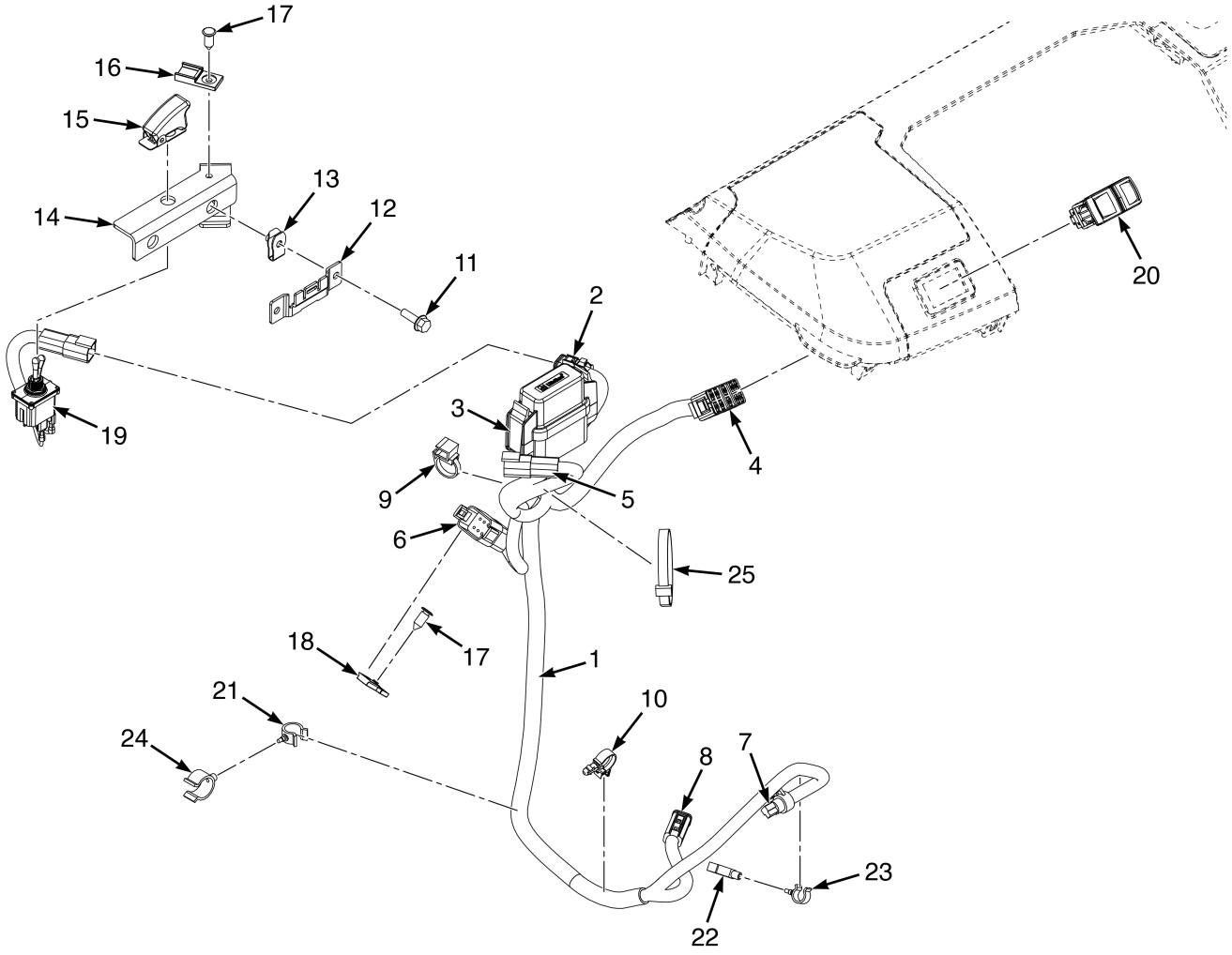

©2026 HYSTER COMPANY

WIRE HARNESS

PARKING BRAKE – WET BRAKE ACTUATION (9/2024 ↔ 12/2024)

ITEM	PART NO.	DESCRIPTION	QTY
1	**a** 4734865	Wire Harness (WBA Parking Brake)	1
1	**b** 4743667	Wire Harness (Park Brake, Wet Brake)	1
2	. . . . .	Connector Assembly (CPS410A) Q-Current Switch	1
2	1490242	Connector (2 Way)	1
2	1490243	Connector (Secondary Lock)	1
2	1597773	Terminal	1
3	. . . . .	Connector Assembly (WBA PDM)	1
3	4273393	Fuse Box	1
3	4273395	Connector Lock	1
3	1330281	Terminal	6
3	4177244	Terminal (Socket) (Alternate Part)	6
3	1330438	Terminal (Socket)	2
3	4229186	Terminal (Socket) (Alternate Part)	2
3	1502919	Plug (Junior Timer Blanking Seal)	4
3	4603971	Relay (35 Amp)	2
3	**a** 4737402	Label (12 Pin PDM)	1
3	**b** 4743668	Label (12 Pin PDM)	1
4	. . . . .	Connector Assembly (CPS172) To WBA Switch	1
4	1484555	Connector Body (10-Way)	1
4	4178577	Terminal	6
5	. . . . .	Connector Assembly (CRP410A) To Chassis Harness or Jumper Harness	1
5	1493465	Connector (2 Pin)	1
5	1330414	Connector (Secondary Lock)	1
5	1531312	Terminal	2
6	. . . . .	Connector Assembly (CRP574) To Chassis Harness	1
6	1623050	Housing (Receptacle, 8-Pin)	1
6	1330418	Connector (Receptacle, 8-Pin)	1
6	1330437	Terminal (Pin)	8
7	. . . . .	Connector Assembly (CPS631) WBA Pressure Sensor	1
7	1327957	Connector (E-Fitting Connector Plug)	1
7	1532571	Terminal (Socket)	3
8	. . . . .	Connector Assembly (CPS632) WBA Manifold Solenoid	1
8	1490242	Connector (2 Way)	1
8	1490243	Connector (Secondary Lock)	1
8	1330438	Terminal (Socket)	2
9	4168707	Retainer	1
10	1500901	Clip (Conduit)	1
11	1527877	Capscrew	2
12	4273394	Bracket - 12 pin PDM	1
13	1566420	Nut (Foldover)	2
14	4376944	Bracket (Q-Current Switch)	1
15	4377051	Cover (Switch)	1
16	1500912	Clip	1
17	1582464	Fastener	2
18	1531480	Clip	1
19	4376952	Switch (Q-Current)	1
20	4696717	Switch - Parking Brake, Rocker Switch	1
21	1502055	Clamp (Swivel)	1
22	1582605	Clamp (PST)	1
23	1573549	Clamp (Swivel) (PST)	1

©2026 HYSTER COMPANY

WIRE HARNESS

PARKING BRAKE – WET BRAKE ACTUATION (9/2024 ↔ 12/2024)

ITEM	PART NO.	DESCRIPTION	QTY
24	1502059	Clamp (Swivel)	1
25	129563	Strap Clamp	1

FOOTNOTES:

a → 11/2024

b 11/2024 →

©2026 HYSTER COMPANY

NOTES

WIRE HARNESS (FIGURE 11-125)

AUTO HIBERNATION — PARKING BRAKE (12/2024 →)

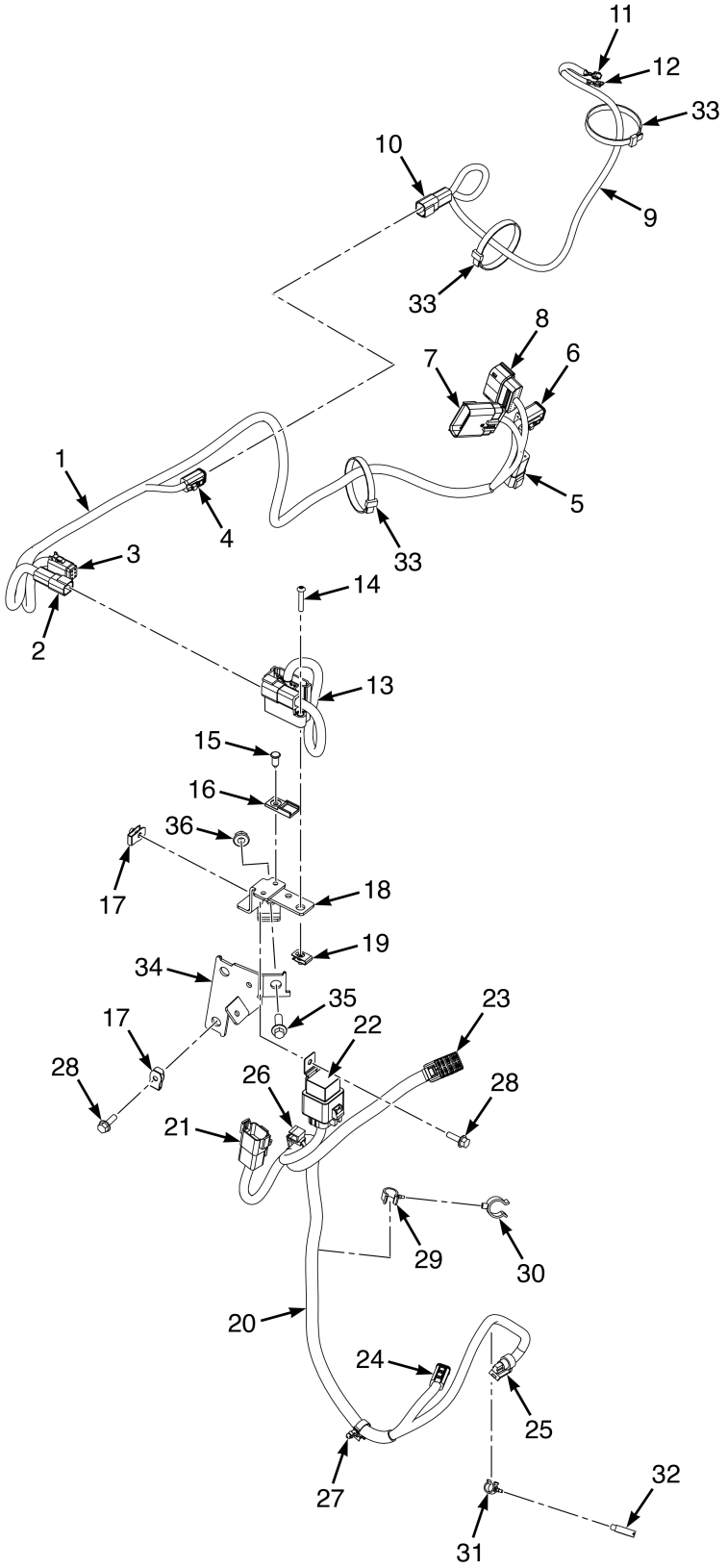

©2026 HYSTER COMPANY

WIRE HARNESS

AUTO HIBERNATION – PARKING BRAKE (12/2024 →)

KEY:
A: Key Start (Wet Brake)
B: Push Button Start (Wet Brake)
C: Key Start (Dry Brake)
D: Push Button Start (Dry Brake)

ITEM	PART NO.	DESCRIPTION	QTY A	QTY B	QTY C	QTY D
1	81003802	Wire Harness (Auto Hibernation Power Jumper)	1	1	1	1
2	. . . . .	Connector Assembly (CRP410A) To Chassis	1	1	1	1
2	1493465	Connector (2 Pin)	1	1	1	1
2	1330414	Connector (Secondary Lock)	1	1	1	1
2	1531312	Terminal	2	2	2	2
3	. . . . .	Connector Assembly (CPS412A) E-Box/Auto Hibernation	1	1	1	1
3	1531973	Connector	1	1	1	1
3	1531974	Connector (Secondary Lock)	1	1	1	1
3	1463141	Terminal (Socket)	6	6	6	6
4	. . . . .	Connector Assembly (CPS411B) To Key Switch Jumper	1	1	1	1
4	1490242	Connector (2 Way)	1	1	1	1
4	1490243	Connector (Secondary Lock)	1	1	1	1
4	1597773	Terminal	2	2	2	2
5	. . . . .	Connector Assembly (CRP520AB) To Chassis Harness	1	1	1	1
5	1525589	Connector (6-Pin)	1	1	1	1
5	1330417	Connector (Secondary Lock)	1	1	1	1
5	1531312	Terminal	4	4	4	4
5	1484377	Plug	2	2	2	2
6	. . . . .	Connector Assembly (C{S520AB) To Display Harness	1	1	1	1
6	1493430	Connector (6 Way Housing)	1	1	1	1
6	1529052	Connector (Secondary Lock)	1	1	1	1
6	1597773	Terminal	4	4	4	4
6	1484377	Plug	2	2	2	2
7	. . . . .	Connector Assembly (CPP4B) To Chassis Harness	1	1	1	1
7	4168956	Connector	1	1	1	1
7	4168958	Terminal (Socket)	11	11	11	11
7	4655881	Plug (Cavity)	9	9	9	9
8	. . . . .	Connector Assembly (CRS4B) To VSM V4	1	1	1	1
8	4137207	Terminal (Socket)	18	18	18	18
8	4331375	Plug	2	2	2	2
9	81000287	Wire Harness (Key Switch Jumper)	1	..	1	..
9	81005202	Wire Harness (Push Button Start Jumper)	..	1	..	1
9	81013874	Wire Harness (E-Box Jumper, Push Button) (Alternate Part)	..	1	..	1
10	. . . . .	Connector Assembly (CRP411A) To Key Switch Jumper	1	..	1	..
10	1493465	Connector (2 Pin)	1	..	1	..
10	1330414	Connector (Secondary Lock)	1	..	1	..
10	1531312	Terminal	2	..	2	..
10	. . . . .	Connector Assembly (CRP411B) To Key Switch Jumper	..	1	..	1
10	1493465	Connector (2 Pin)	..	1	..	1
10	1330414	Connector (Secondary Lock)	..	1	..	1
10	1531312	Terminal	..	2	..	..
11	. . . . .	Connector Assembly (CTS400-2) To Key Switch Pin 2	1	..	1	..
11	1402908	Terminal	1	..	1	..

WIRE HARNESS

AUTO HIBERNATION – PARKING BRAKE (12/2024 →)

KEY:
A: Key Start (Wet Brake)
B: Push Button Start (Wet Brake)
C: Key Start (Dry Brake)
D: Push Button Start (Dry Brake)

ITEM	PART NO.	DESCRIPTION	QTY A	QTY B	QTY C	QTY D
11	. . . . .	Connector Assembly (CRP410A) To Push Button	..	1	..	1
11	4323561	Connector	..	1	..	1
11	4323562	Terminal	..	4	..	4
12	. . . . .	Connector Assembly (CTS400-6) To Key Switch Pin 6	1	..	1	..
12	1402908	Terminal	1	..	1	..
13	81003347	Control Box (Auto Hibernation)	1	1	1	1
14	4216688	Screw	1	1	1	1
15	1582464	Fastener	3	3	1	1
16	1500912	Clip	2	2	1	1
17	**a** 1566420	Nut (Foldover)	1	1	..	..
17	**b** 1566420	Nut (Foldover)	3	3	..	..
18	81005074	Bracket (Wet Brake)	1	1	..	..
18	81005072	Bracket (Dry Brake)	..	..	1	1
19	4019192	Clip , Nut	1	1	1	1
20	4702114	Wire Harness - WBA Parking Brake	1	1	..	..
20	81013876	Wire Harness (WBA Park Brake)	1	1	..	..
21	. . . . .	Connector Assembly (CRP574) To Chassis Harness	1	1	..	..
21	1623050	Housing (Receptacle, 8-Pin)	1	1	..	..
21	1330418	Connector (Receptacle, 8-Pin)	1	1	..	..
21	1330437	Terminal (Pin)	8	8	..	..
22	. . . . .	Connector Assembly (CPS173) Wet Brake Actuation LED Control Relay	1	1	..	..
22	4030503	Connector	1	1	..	..
22	1354204	Terminal	4	4	..	..
22	1323581	Plug	1	1	..	..
23	. . . . .	Connector Assembly (CPS172) To Wet Brake Actuation Switch	1	1	..	..
23	1484555	Connector Body (10-Way)	1	1	..	..
23	4178577	Terminal	6	6	..	..
24	. . . . .	Connector Assembly (CPS632) Wet Brake Actuation Manifold Solenoid	1	1	..	..
24	1490242	Connector (2 Way)	1	1	..	..
24	1490243	Connector (Secondary Lock)	1	1	..	..
24	1330438	Terminal (Socket)	2	2	..	..
25	. . . . .	Connector Assembly (CPS631) Wet Brake Actuation Pressure Sensor	1	1	..	..
25	1327957	Connector (E-Fitting Connector Plug)	1	1	..	..
25	1532571	Terminal (Socket)	3	3	..	..
26	4168707	Retainer	1	1	..	..
27	1500901	Clip (Conduit)	1	1	..	..
28	**a** 1527877	Capscrew	1	1	..	..
28	**b** 1527877	Capscrew	3	3	..	..
29	1502055	Clamp (Swivel)	1	1	..	..

See Service Manual for service procedures.
©2026 HYSTER COMPANY

WIRE HARNESS

AUTO HIBERNATION – PARKING BRAKE (12/2024 →)

KEY:
A: Key Start (Wet Brake)
B: Push Button Start (Wet Brake)
C: Key Start (Dry Brake)
D: Push Button Start (Dry Brake)

ITEM	PART NO.	DESCRIPTION	QTY A	QTY B	QTY C	QTY D
30	1502059	Clamp (Swivel)	1	1	..	..
31	1573549	Clamp (Swivel) (PST)	1	1	..	..
32	1582605	Clamp (PST)	1	1	..	..
33	129563	Strap Clamp	AR	AR	AR	AR
33	2004005	Strap Clamp (Alternate Part)	AR	AR	AR	AR
34	**b** 4338969	Bracket - WBA Reservior Bottle	1	1	..	..
35	**b** 1510113	Capscrew	1	1	..	..
36	**b** ~~1382472~~					
	1502543	Nut	1	1	..	..

FOOTNOTES:

a → 5/2025

b 5/2025 →

WIRE HARNESS (FIGURE 11-126)
POWER TO MAST

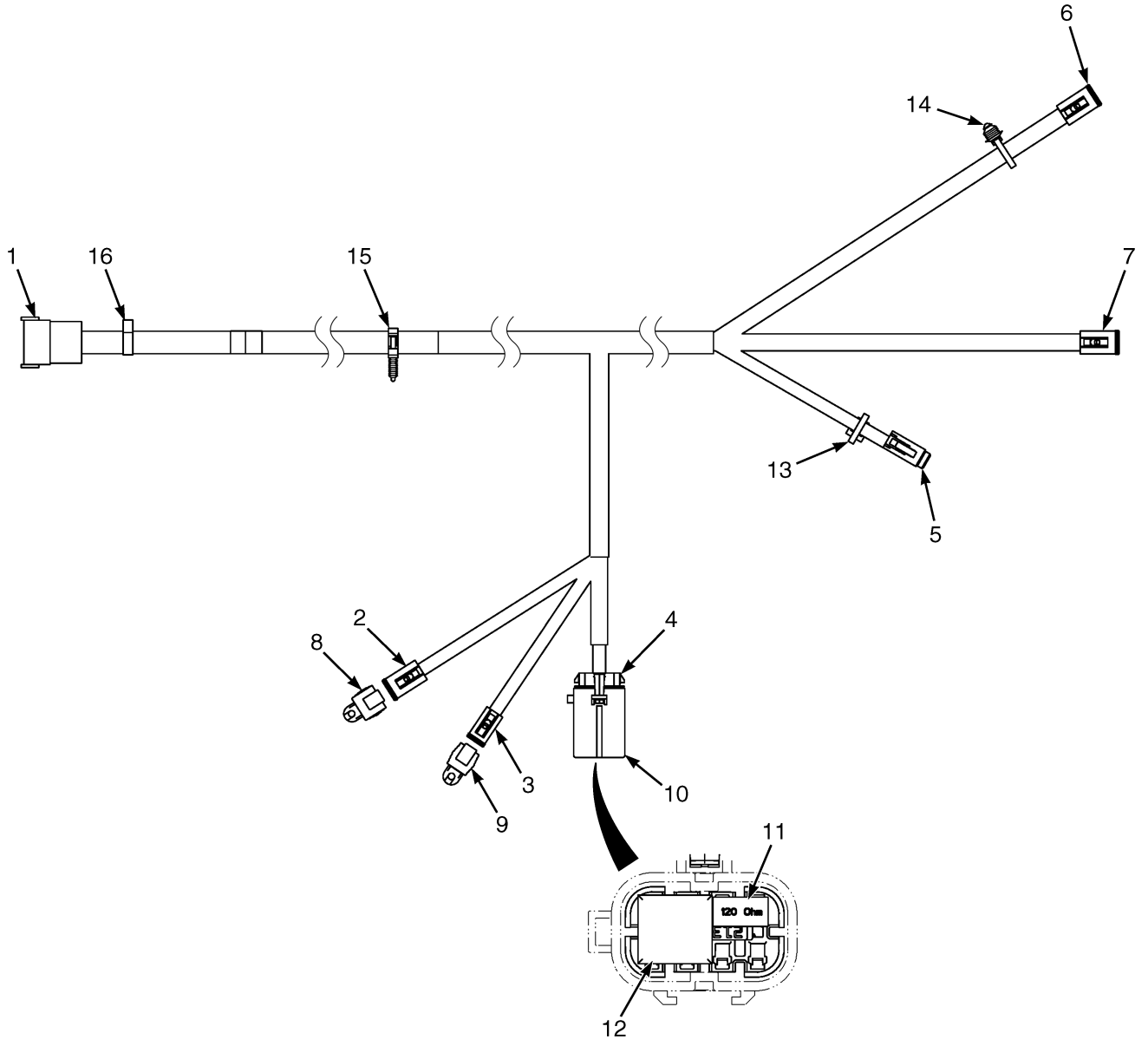

©2026 HYSTER COMPANY

WIRE HARNESS
POWER TO MAST

KEY:
A: Discrete Height w/o RTST
B: Continuous Height w/o RTST
C: Discrete Height w/ RTST
D: Continuous Height w/ RTST

ITEM	PART NO.	DESCRIPTION	QTY A	QTY B	QTY C	QTY D
	4710912	Wire Harness - Power to Mast, Disc Hgt w/o Tilt	1	..	..	..
	4710913	Wire Harness - Power to Mast, Disc/Cont Hgt w/o Tilt	..	1	..	..
	4710914	Wire Harness - Power to Mast, Disc Hgt w/ RTST	..	..	1	..
	4710915	Wire Harness - Power to Mast, Disc/Cont Hgt w/ RTST	..	..	..	1
1	. . . . .	Connector Assembly (CRP530) To Chassis	1	1	1	1
1	1500925	Connector (DT REC 12-Pin)	1	1	1	1
1	1352603	Secondary Lock	1	1	1	1
1	1330437	Terminal (Pin)	6	8	8	8
1	1484377	Plug	6	4	4	4
2	. . . . .	Connector Assembly (CPS586) To Fork Height Jumper	1	1	1	1
2	1489656	Connector (4-Way)	1	1	1	1
2	1489657	Connector (Secondary Lock)	1	1	1	1
2	1330438	Terminal (Socket)	3	3	3	3
2	1484377	Plug	1	1	1	1
3	. . . . .	Connector Assembly (CPS545) To Mast Light Jumper	1	1	1	1
3	1490242	Connector (2 Way)	1	1	1	1
3	1490243	Connector (Secondary Lock)	1	1	1	1
3	1330438	Terminal (Socket)	2	2	2	2
4	. . . . .	Connector Assembly (CPS591) Relay Holder	1	1	1	1
4	1521183	Connector	1	1	1	1
4	1521188	Lock	1	1	1	1
4	1330281	Terminal	4	6	6	6
4	1327164	Terminator	4	2	2	2
5	. . . . .	Connector Assembly (CPS567) Power To Carriage	1	1	1	1
5	1655172	Connector	1	1	1	1
5	1541992	Connector (Secondary Lock)	1	1	1	1
5	1463139	Terminal	2	2	2	2
5	1484377	Plug	6	6	6	6
6	. . . . .	Connector Assembly (CPS514) Mast Tilt Sensor	..	..	1	1
6	1330422	Connector (DT PLU 6-Socket)	..	..	1	1
6	1330428	Connector (Secondary Lock)	..	..	1	1
6	1330438	Terminal (Socket)	..	..	4	4
6	1330439	Plug Seal	..	..	2	2
7	. . . . .	Connector Assembly (CPS576) To Fork Height	..	1	..	1
7	1489656	Connector (4-Way)	..	1	..	1
7	1489657	Connector (Secondary Lock)	..	1	..	1
7	1518112	Terminal (Socket)	..	4	..	4
8	4036523	Cap	1	..	1	..
9	4035905	Cap (DT 2-Way)	1	1	1	1
10	4045422	Cover	1	1	1	1
11	4276153	Resistor	..	1	1	1
11	4276161	Resistor (Optional)	..	1	1	1
12	1528315	Relay (20 Amp)	1	1	1	1

©2026 HYSTER COMPANY

WIRE HARNESS
POWER TO MAST

KEY:
A: Discrete Height w/o RTST
B: Continuous Height w/o RTST
C: Discrete Height w/ RTST
D: Continuous Height w/ RTST

ITEM	PART NO.	DESCRIPTION	QTY A	QTY B	QTY C	QTY D
13	4168707	Retainer	1	1	1	1
14	4697921	Cable (Clip)	..	..	1	1
15	1509890	Clip	1	1	1	1
16	1534828	Clip	1	1	1	1

See Service Manual for service procedures.
©2026 HYSTER COMPANY

NOTES

WIRE HARNESS (FIGURE 11-127)
REAR CAMERA — WITH FRONT DISPLAY

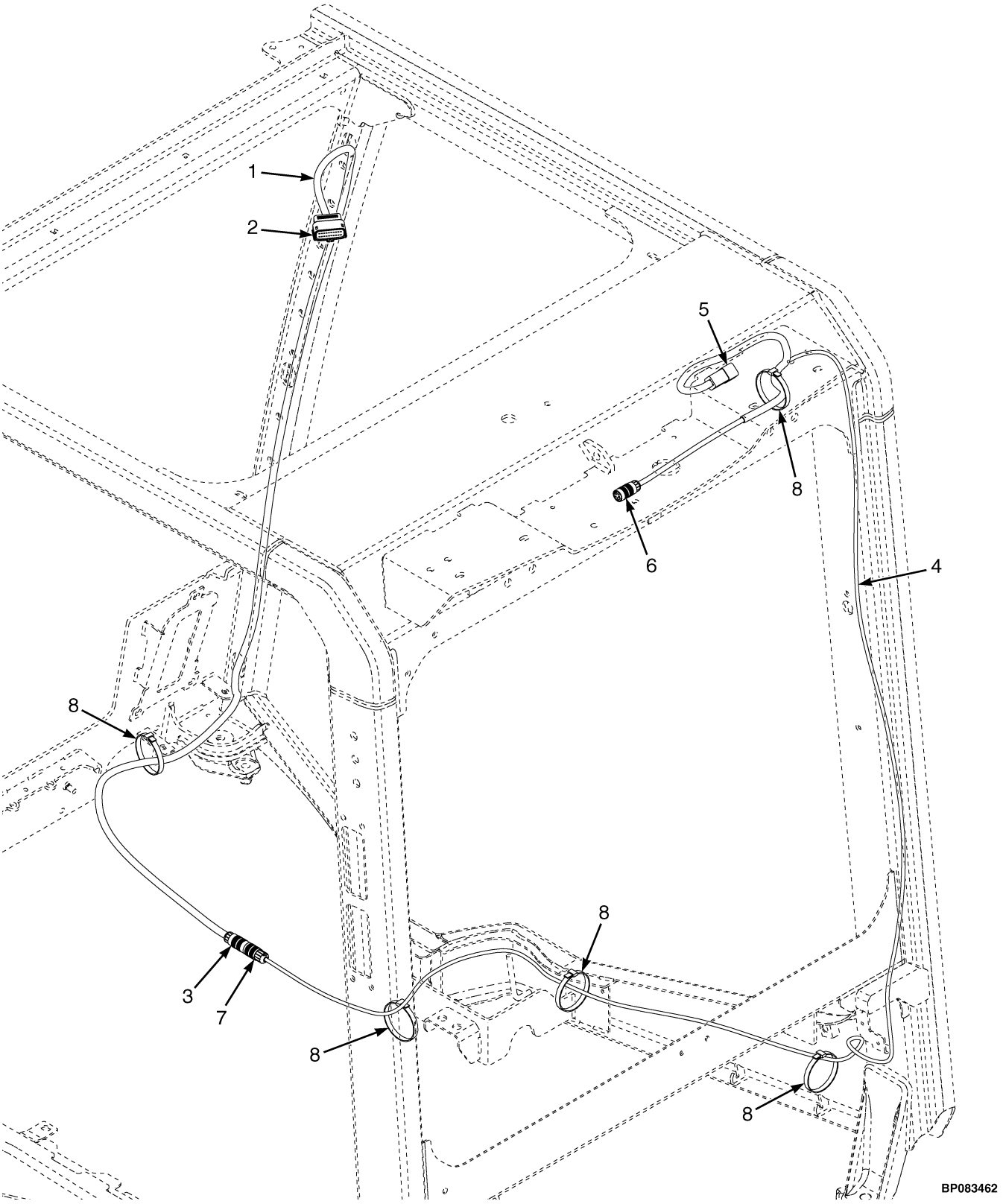

©2026 HYSTER COMPANY

WIRE HARNESS

REAR CAMERA – WITH FRONT DISPLAY

ITEM	PART NO.	DESCRIPTION	QTY
1	4697604	Wire Harness - Rear Camera with Front Display, Front Position	1
2	. . . . .	Connector Assembly (CRS101) To Front Display J2	1
2	4135138	Connector (MX150, Keying Option A)	1
2	4137207	Terminal (Socket)	2
2	4655881	Plug (Cavity)	18
3	. . . . .	Connector Assembly (CRP595) To Rear Camera Harness	1
3	4278630	Connector	1
4	**a** 4697603	Wire Harness - Rear Camera with Front Display, Rear Harness	1
4	**b** 4721913	Wire Harness - Rear Camera with Front Display, Rear Harness	1
5	. . . . .	Connector Assembly (CRP596) To Rear OHG	1
5	1402923	Connector	1
5	1330417	Connector (Secondary Lock)	1
5	1330437	Terminal (Pin)	2
5	1484377	Plug	4
6	. . . . .	Connector Assembly (CRS108) To Camera	1
6	4278630	Connector	1
7	. . . . .	Connector Assembly (CPS595) To Front Camera Harness	1
7	4280416	Connector	1
8	129563	Strap Clamp	5

FOOTNOTES:

a → 7/2022

b 7/2022 →

WIRE HARNESS (FIGURE 11-128)

REAR CAMERA — WITH REAR DISPLAY

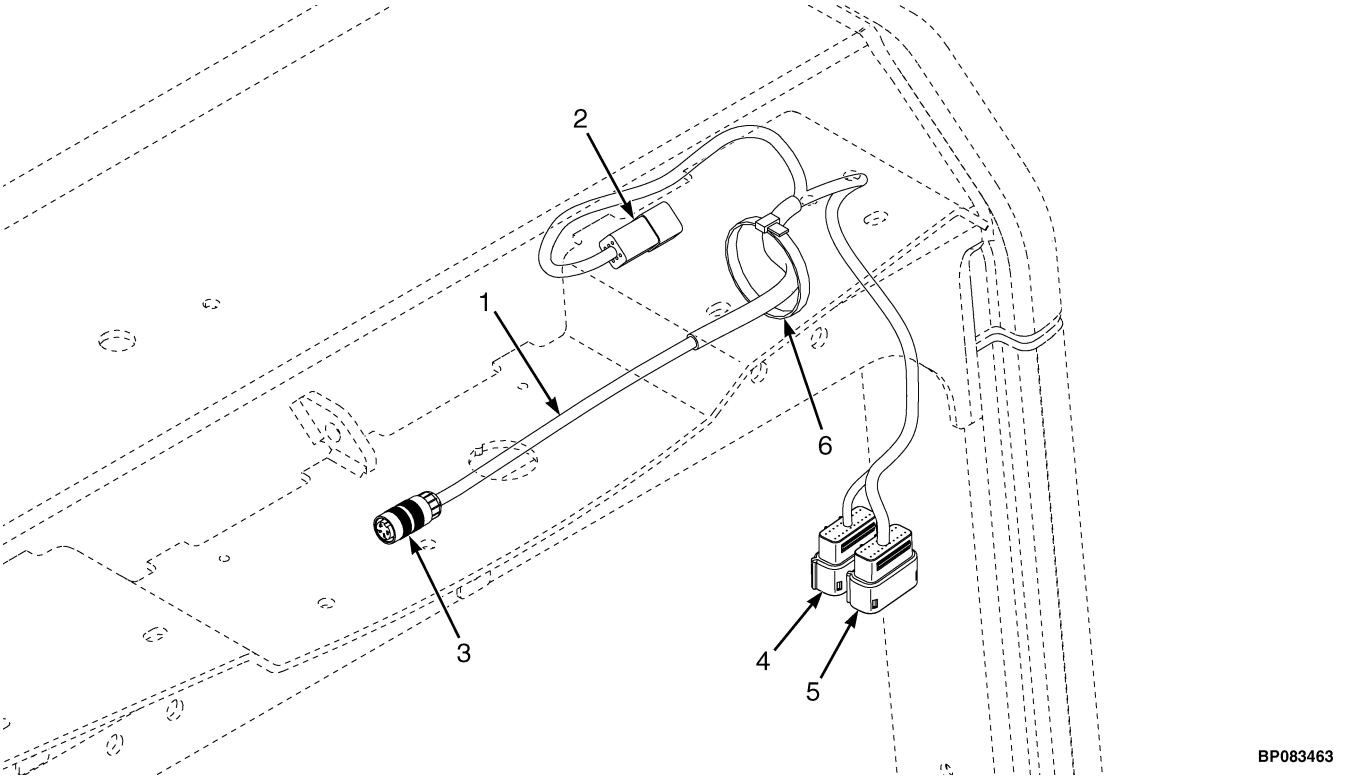

ITEM	PART NO.	DESCRIPTION	QTY
1	**a** 4697605	Wire Harness - Rear Camera with Rear Display	1
1	**b** 4721914	Wire Harness - Rear Camera with Rear Display	1
2	. . . . .	Connector Assembly (CRP596) To Rear OHG Harness	1
2	**a** 1402923	Connector	1
2	**b** 1623050	Housing (Receptacle, 8-Pin)	1
2	**a** 1330417	Connector (Secondary Lock)	1
2	**b** 1330418	Connector (Receptacle, 8-Pin)	1
2	1330437	Terminal (Pin)	6
2	**b** 1484377	Plug	2
3	. . . . .	Connector Assembly (CRS108) To Camera	1
3	4278630	Connector	1
4	. . . . .	Connector Assembly (CRS106) Rear Display J2	1
4	4135138	Connector (MX150, Keying Option A)	1
4	4137207	Terminal (Socket)	2
4	4655881	Plug (Cavity)	18
5	. . . . .	Connector Assembly (CRS105) Rear Display J1	1
5	4135139	Connector (MX150, Keying Option B)	1
5	4137207	Terminal (Socket)	4
5	4655881	Plug (Cavity)	16
6	129563	Strap Clamp	1

FOOTNOTES:

a → 7/2022

b 7/2022 →

©2026 HYSTER COMPANY

NOTES

WIRE HARNESS (FIGURE 11-129)
REAR OHG

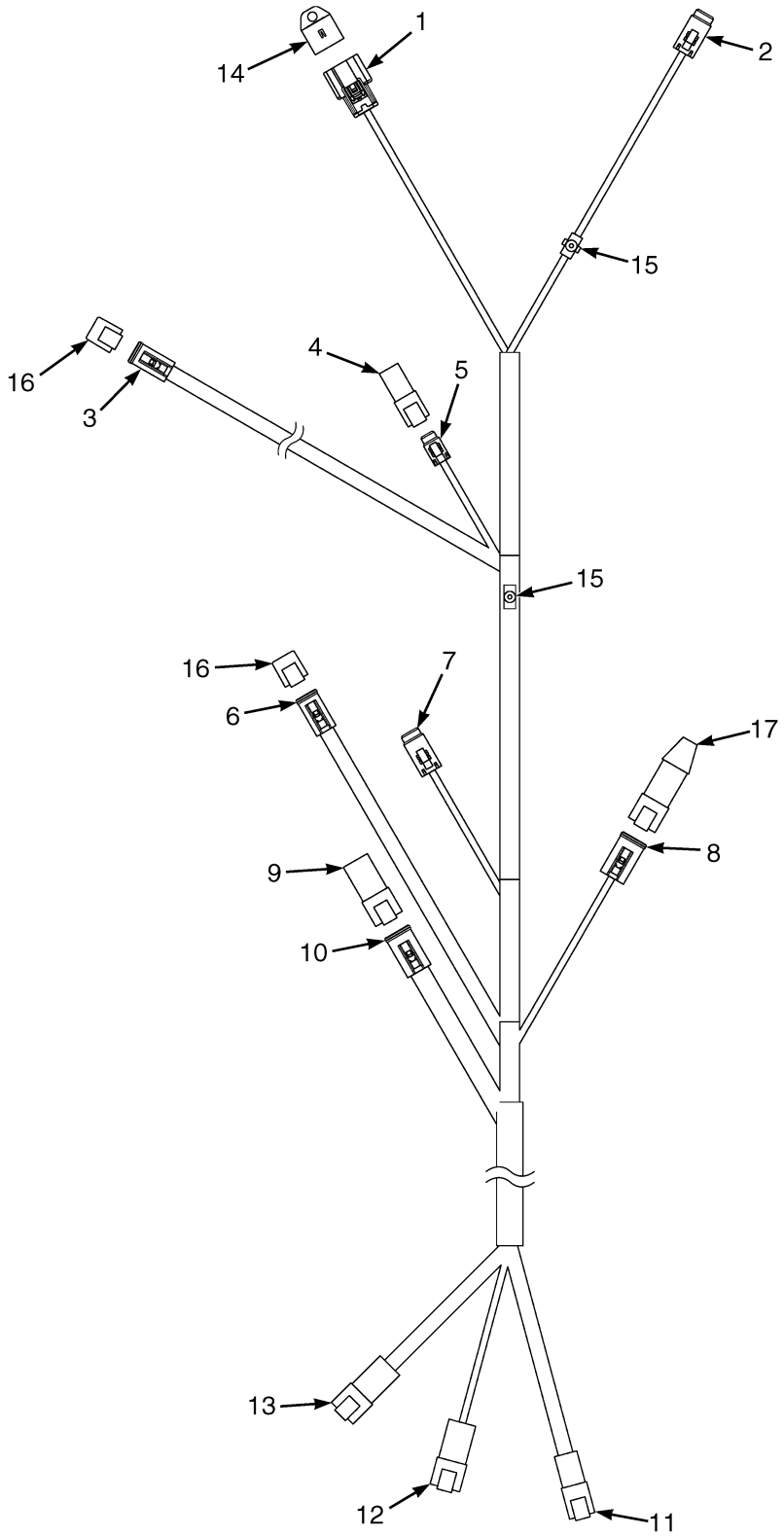

©2026 HYSTER COMPANY

WIRE HARNESS
REAR OHG

KEY:
A: Mid
B: Base
C: Full

ITEM	PART NO.	DESCRIPTION	QTY A	QTY B	QTY C
	4700174	Wire Harness - Rear OHG Mid	1	..	..
	4700175	Wire Harness - Rear OHG Base	..	1	..
	4700173	Wire Harness - Rear OHG Full	..	..	1
1	. . . . .	Connector Assembly (CRS500) Telemetry	1	..	1
1	4135137	Connector	1	..	1
1	4137207	Terminal (Socket)	5	..	5
1	4655881	Plug (Cavity)	3	..	3
2	. . . . .	Connector Assembly (CPS308) LH Tail Light	1	1	1
2	1531973	Connector	1	1	1
2	1531974	Connector (Secondary Lock)	1	1	1
2	1463139	Terminal	5	5	5
2	1484377	Plug	1	1	1
3	. . . . .	Connector Assembly (CPS311) Blue/Red Light	1	..	1
3	1490242	Connector (2 Way)	1	..	1
3	1490243	Connector (Secondary Lock)	1	..	1
3	1330438	Terminal (Socket)	1	..	1
4	. . . . .	Connector Assembly (CRP310) End Cap	1	..	1
4	1561559	Connector (2 Pin)	1	..	1
4	1561755	Connector (Secondary Lock)	1	..	1
4	1484377	Plug	2	..	2
5	. . . . .	Connector Assembly (CPS310) Strobe	1	..	1
5	1484557	Connector (2 Socket)	1	..	1
5	1484558	Connector (Secondary Lock)	1	..	1
5	1463139	Terminal	2	..	2
6	. . . . .	Connector Assembly (CPS302) Work Light	1	1	1
6	1490242	Connector (2 Way)	1	1	1
6	1490243	Connector (Secondary Lock)	1	1	1
6	1330438	Terminal (Socket)	2	2	2
7	. . . . .	Connector Assembly (CPS309) RH Tail Light	1	1	1
7	1531973	Connector	1	1	1
7	1531974	Connector (Secondary Lock)	1	1	1
7	1463139	Terminal	5	5	5
7	1484377	Plug	1	1	1
8	. . . . .	Connector Assembly (CPS504) Can Term 4	1	..	1
8	1489656	Connector (4-Way)	1	..	1
8	1489657	Connector (Secondary Lock)	1	..	1
8	1484377	Plug	2	..	2
8	1330438	Terminal (Socket)	2	..	2
9	. . . . .	Connector Assembly (CRP596) End Cap	1	1	1
9	1525589	Connector (6-Pin)	1	1	1
9	1330417	Connector (Secondary Lock)	1	1	1
9	1484377	Plug	6	6	6
10	. . . . .	Connector Assembly (CPS596) OHG ACC Conn	..	..	1
10	1493430	Connector (6 Way Housing)	..	..	1

©2026 HYSTER COMPANY

WIRE HARNESS
REAR OHG

KEY:
A: Mid
B: Base
C: Full

ITEM	PART NO.	DESCRIPTION	QTY A	QTY B	QTY C
10	1529052	Connector (Secondary Lock)	..	..	1
10	1330438	Terminal (Socket)	..	..	6
11	. . . . .	Connector Assembly (CRP544) To Chassis Harness	1	..	..
11	1530960	Connector (6-Pin)	1	..	1
11	1530961	Connector (Secondary Lock)	1	..	1
11	1463138	Terminal (Pin)	5	..	5
11	1484377	Plug	1	..	1
12	. . . . .	Connector Assembly (CRP542) To Chassis Harness	1	1	1
12	1489655	Connector (4 Way)	1	1	1
12	1330416	Connector (Secondary Lock)	1	1	1
12	1330437	Terminal (Pin)	4	4	4
13	. . . . .	Connector Assembly (CRP543) To Chassis Harness	1	1	1
13	1402923	Connector	1	1	1
13	1330417	Connector (Secondary Lock)	1	1	1
13	1330437	Terminal (Pin)	5	5	5
13	1484377	Plug	1	1	1
14	4700066	Cap	1	1	1
15	4140361	Cable Clip	2	2	2
16	1626727	Connector	2	2	2
17	1525577	Connector (With Resistor)	1	1	1

See Service Manual for service procedures.
©2026 HYSTER COMPANY

WIRE HARNESS (FIGURE 11-130)
REAR OHG (BASE OPTION) — ALTERNATE PART

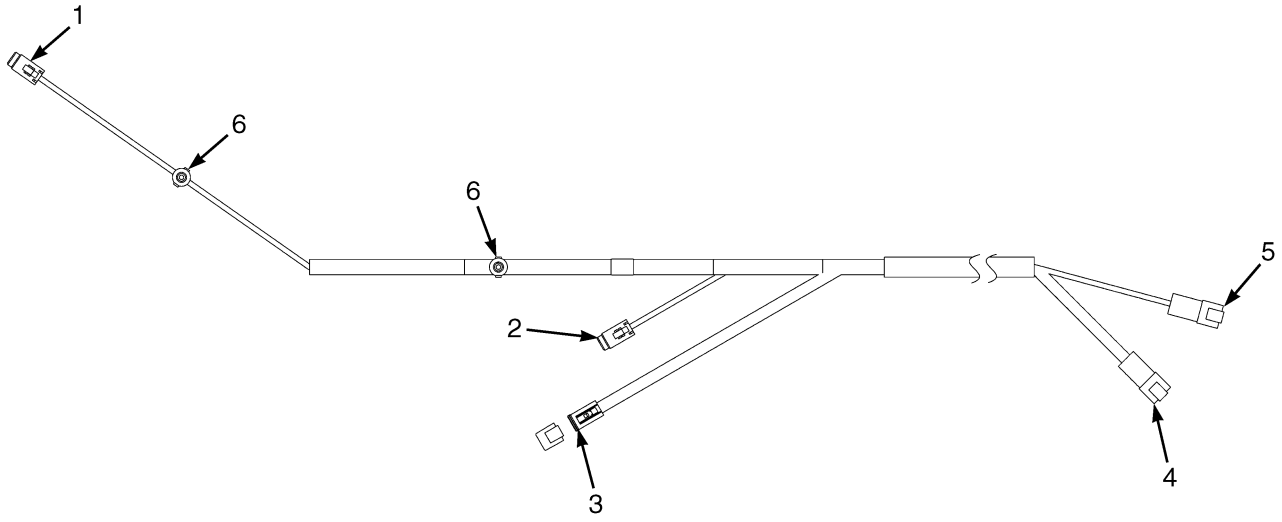

BP083724

ITEM	PART NO.	DESCRIPTION	QTY
	4700175	Wire Harness - Rear OHG Base	1
1	. . . . .	Connector Assembly (CPS308) LH Tail Light	1
1	1531973	Connector	1
1	1531974	Connector (Secondary Lock)	1
1	1463139	Terminal	5
1	1484377	Plug	1
2	. . . . .	Connector Assembly (CPS309) RH Tail Light	1
2	1531973	Connector	1
2	1531974	Connector (Secondary Lock)	1
2	1463139	Terminal	5
2	1484377	Plug	1
3	. . . . .	Connector Assembly (CPS302) Work Light	1
3	1490242	Connector (2 Way)	1
3	1490243	Connector (Secondary Lock)	1
3	1330438	Terminal (Socket)	2
3	1626727	Connector	1
4	. . . . .	Connector Assembly (CRP543) To Chassis Harness	1
4	1402923	Connector	1
4	1330417	Connector (Secondary Lock)	1
4	1330437	Terminal (Pin)	5
4	1484377	Plug	1
5	. . . . .	Connector Assembly (CRP542) To Chassis Harness	1
5	1489655	Connector (4 Way)	1
5	1330416	Connector (Secondary Lock)	1
5	1330437	Terminal (Pin)	2
5	1484377	Plug	2
6	4309225	Retainer	2
6	4140361	Cable Clip (Alternate Part)	2

WIRE HARNESS (FIGURE 11-131)
REAR OHG (MID OPTION) — ALTERNATE PART

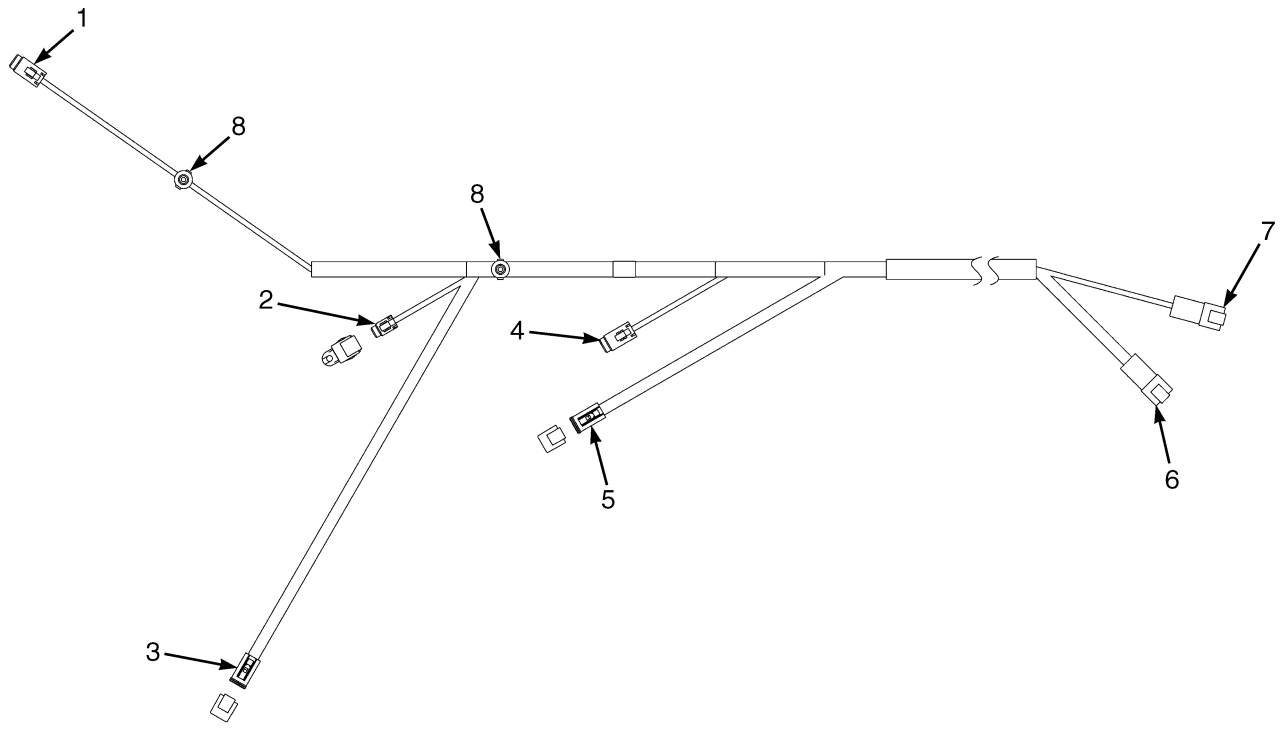

BP083721

ITEM	PART NO.	DESCRIPTION	QTY
	4716645	Wire Harness - Rear OHG Mid	1
1	. . . . .	Connector Assembly (CPS308) LH Tail Light	1
1	1531973	Connector	1
1	1531974	Connector (Secondary Lock)	1
1	1463139	Terminal	5
1	1484377	Plug	1
2	. . . . .	Connector Assembly (CPS310) Strobe	1
2	1484557	Connector (2 Socket)	1
2	1484558	Connector (Secondary Lock)	1
2	1463139	Terminal	2
2	4312823	Cap - DTM 2 Way	1
3	. . . . .	Connector Assembly (CPS311) Blue/Red Light	1
3	1490242	Connector (2 Way)	1
3	1490243	Connector (Secondary Lock)	1
3	1330438	Terminal (Socket)	2
3	1626727	Connector	1
4	. . . . .	Connector Assembly (CPS309) RH Tail Light	1
4	1531973	Connector	1
4	1531974	Connector (Secondary Lock)	1
4	1463139	Terminal	5
4	1484377	Plug	1
5	. . . . .	Connector Assembly (CPS302) Work Light	1
5	1490242	Connector (2 Way)	1
5	1490243	Connector (Secondary Lock)	1

See Service Manual for service procedures.
©2026 HYSTER COMPANY

ITEM	PART NO.	DESCRIPTION	QTY
5	1330438	Terminal (Socket)	2
5	1626727	Connector	1
6	. . . . .	Connector Assembly (CRP543) To Chassis Harness	1
6	1402923	Connector	1
6	1330417	Connector (Secondary Lock)	1
6	1330437	Terminal (Pin)	5
6	1484377	Plug	1
7	. . . . .	Connector Assembly (CRP542) To Chassis Harness	1
7	1489655	Connector (4 Way)	1
7	1330416	Connector (Secondary Lock)	1
7	1330437	Terminal (Pin)	2
7	1484377	Plug	2
8	4309225	Retainer	2
8	4140361	Cable Clip (Alternate Part)	2

©2026 HYSTER COMPANY

WIRE HARNESS (FIGURE 11-132)

REAR OHG (FULL OPTION) — ALTERNATE PART (→ 7/2022)

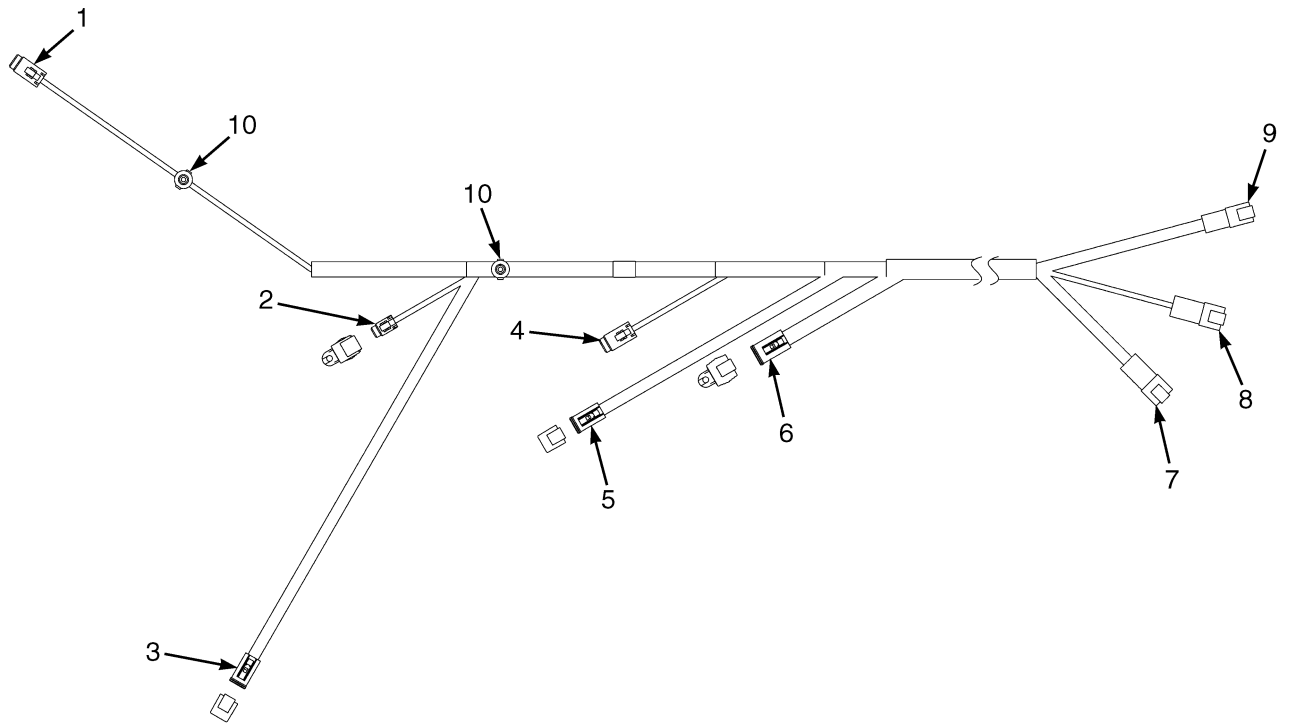

BP083723

ITEM	PART NO.	DESCRIPTION	QTY
	4716646	Wire Harness - Rear OHG Full	1
1	. . . . .	Connector Assembly (CPS308) LH Tail Light	1
1	1531973	Connector	1
1	1531974	Connector (Secondary Lock)	1
1	1463139	Terminal	5
1	1484377	Plug	1
2	. . . . .	Connector Assembly (CPS310) Strobe	1
2	1484557	Connector (2 Socket)	1
2	1484558	Connector (Secondary Lock)	1
2	1463139	Terminal	2
2	4312823	Cap - DTM 2 Way	1
3	. . . . .	Connector Assembly (CPS311) Blue/Red Light	1
3	1490242	Connector (2 Way)	1
3	1490243	Connector (Secondary Lock)	1
3	1626727	Connector	1
4	. . . . .	Connector Assembly (CPS309) RH Tail Light	1
4	1531973	Connector	1
4	1531974	Connector (Secondary Lock)	1
4	1463139	Terminal	5
4	1484377	Plug	1
5	. . . . .	Connector Assembly (CPS302) Work Light	1
5	1490242	Connector (2 Way)	1
5	1490243	Connector (Secondary Lock)	1
5	1330438	Terminal (Socket)	2

©2026 HYSTER COMPANY

ITEM	PART NO.	DESCRIPTION	QTY
5	1626727	Connector	1
6	. . . . .	Connector Assembly (CPS596) OHG ACC Connection	1
6	1493430	Connector (6 Way Housing)	1
6	1529052	Connector (Secondary Lock)	1
6	1330438	Terminal (Socket)	6
6	4036873	Cap (6 Way)	1
7	. . . . .	Connector Assembly (CRP543) To Chassis Harness	1
7	1402923	Connector	1
7	1330417	Connector (Secondary Lock)	1
7	1330437	Terminal (Pin)	5
7	1484377	Plug	1
8	. . . . .	Connector Assembly (CRP542) To Chassis Harness	1
8	1489655	Connector (4 Way)	1
8	1330416	Connector (Secondary Lock)	1
8	1330437	Terminal (Pin)	4
9	. . . . .	Connector Assembly (CRP544) To Chassis	1
9	~~4170087~~		
	1463184	Connector Housing	1
9	~~4046140~~		
	1463193	Connector	1
9	1484377	Plug	2
9	1463138	Terminal (Pin)	2
10	4309225	Retainer	2

WIRE HARNESS (FIGURE 11-133)

REAR OHG (FULL OPTION) — ALTERNATE PART (7/2022 →)

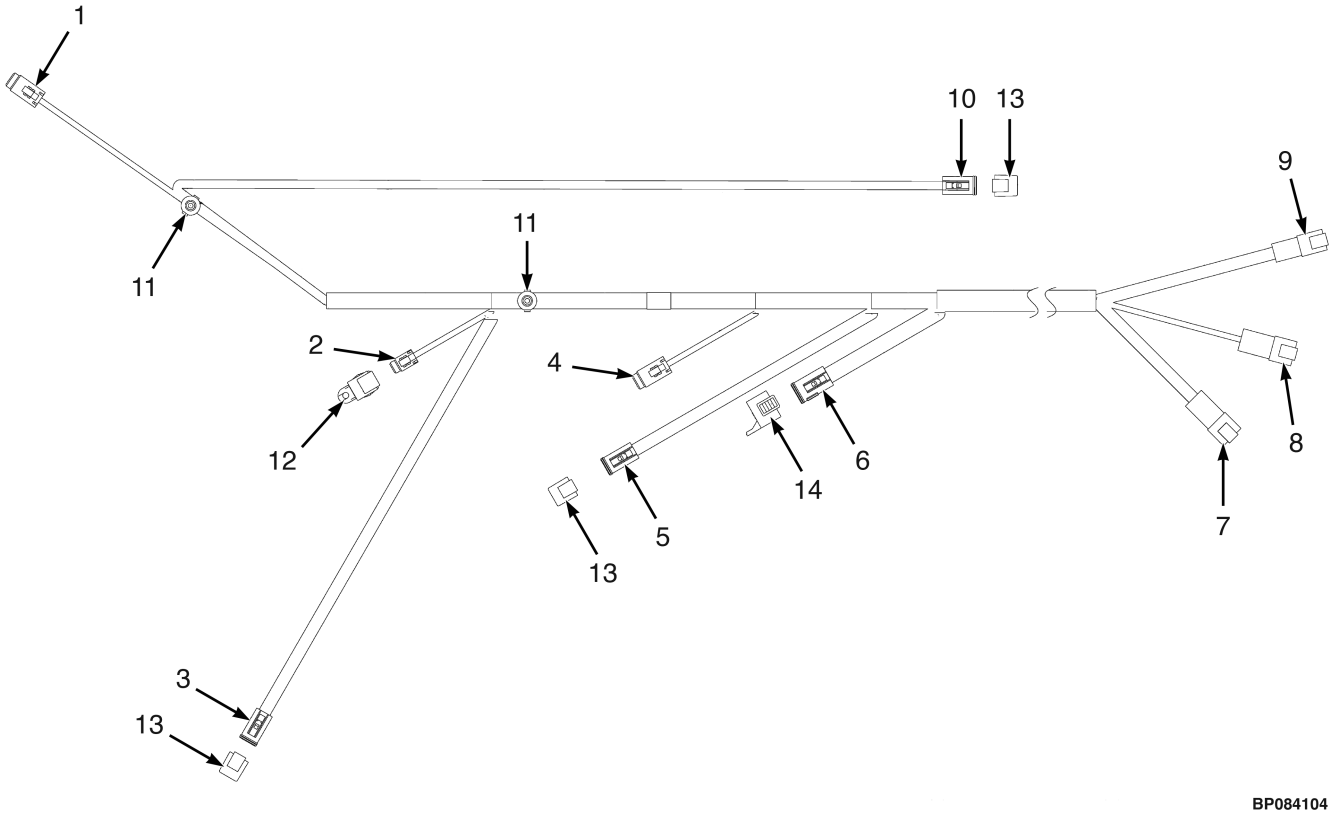

©2026 HYSTER COMPANY

WIRE HARNESS

REAR OHG (FULL OPTION) – ALTERNATE PART (7/2022 →)

ITEM	PART NO.	DESCRIPTION	QTY
	4721837	Wire Harness - Rear OHG Full	1
1	. . . . .	Connector Assembly (CPS308) LH Tail Light	1
1	1531973	Connector	1
1	1531974	Connector (Secondary Lock)	1
1	1463139	Terminal	5
1	1484377	Plug	1
2	. . . . .	Connector Assembly (CPS310) Strobe	1
2	1484557	Connector (2 Socket)	1
2	1484558	Connector (Secondary Lock)	1
2	1463139	Terminal	2
3	. . . . .	Connector Assembly (CPS311) Blue/Red Light	1
3	1490242	Connector (2 Way)	1
3	1490243	Connector (Secondary Lock)	1
4	. . . . .	Connector Assembly (CPS309) RH Tail Light	1
4	1531973	Connector	1
4	1531974	Connector (Secondary Lock)	1
4	1463139	Terminal	5
4	1484377	Plug	1
5	. . . . .	Connector Assembly (CPS302) Work Light	1
5	1490242	Connector (2 Way)	1
5	1490243	Connector (Secondary Lock)	1
5	1330438	Terminal (Socket)	2
6	. . . . .	Connector Assembly (CPS596) OHG ACC Connection	1
6	1502625	Connector (DT PLU 8-Socket)	1
6	1502626	Connector (Secondary Lock)	1
6	1330438	Terminal (Socket)	6
6	1484377	Plug	2
7	. . . . .	Connector Assembly (CRP543) To Chassis Harness	1
7	1402923	Connector	1
7	1330417	Connector (Secondary Lock)	1
7	1330437	Terminal (Pin)	5
7	1484377	Plug	1
8	. . . . .	Connector Assembly (CRP542) To Chassis Harness	1
8	1489655	Connector (4 Way)	1
8	1330416	Connector (Secondary Lock)	1
8	1330437	Terminal (Pin)	4
9	. . . . .	Connector Assembly (CRP544) To Chassis	1
9	~~4170087~~		
	1463184	Connector Housing	1
9	~~4046140~~		
	1463193	Connector	1
9	1484377	Plug	2
9	1463138	Terminal (Pin)	2
10	. . . . .	Connector Assembly (CPS356) Operator Fan	1
10	1490242	Connector (2 Way)	1
10	1490243	Connector (Secondary Lock)	1
10	1330438	Terminal (Socket)	1
11	4309225	Retainer	2
11	4140361	Cable Clip (Alternate Part)	2
12	4312823	Cap - DTM 2 Way	1

WIRE HARNESS

REAR OHG (FULL OPTION) – ALTERNATE PART (7/2022 →)

ITEM	PART NO.	DESCRIPTION	QTY
13	1626727	Connector	3
14	4044070	Cap	1

©2026 HYSTER COMPANY

WIRE HARNESS (FIGURE 11-134)
SEAT — AIR RIDE SUSPENSION

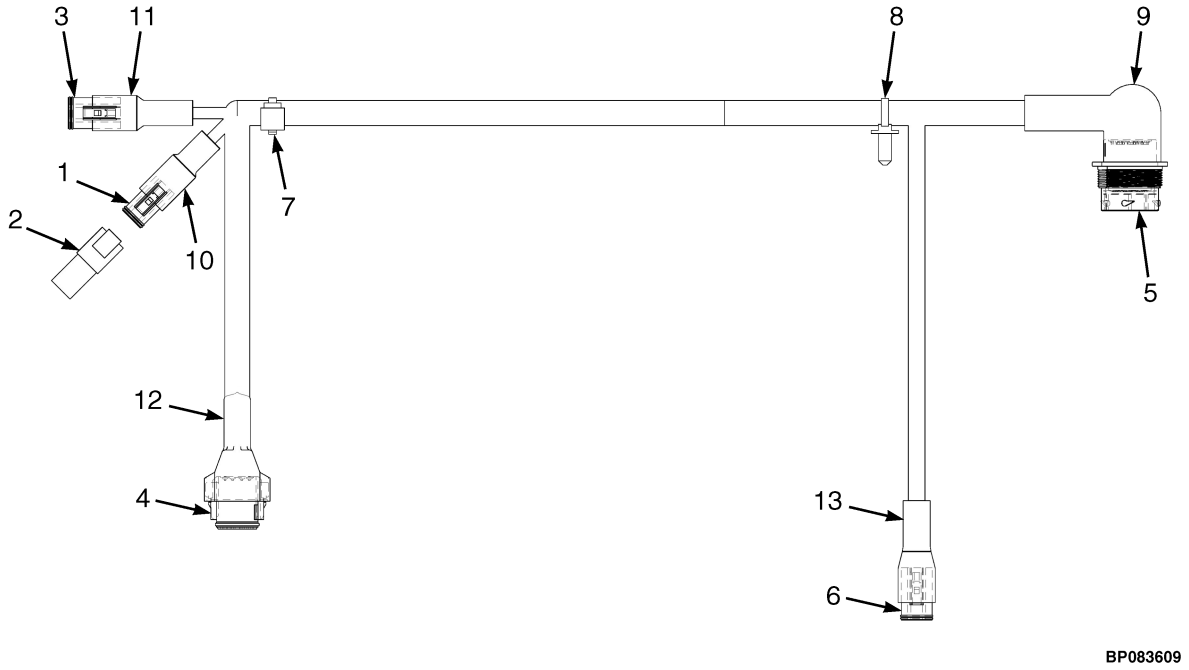

KEY:
A: Type S with MLM
B: Type S without MLM
C: With MLM
D: Without MLM

ITEM	PART NO.	DESCRIPTION	QTY A	QTY B	QTY C	QTY D
	4715485	Wire Harness - Seat (Air Ride, Type-S w/ MLM)	1	..	..	..
	4715486	Wire Harness - Seat (Air Ride, Type-S w/o MLM)	..	1	..	..
	4715484	Wire Harness - Seat (Air Ride w/ MLM)	..	..	1	..
	4715482	Wire Harness - Seat (Air Ride w/o MLM)	..	..	..	1
1	. . . . .	Connector Assembly (CPS275) Seat Belt	1	1	1	1
1	1490242	Connector (2 Way)	1	1	1	1
1	1490243	Connector (Secondary Lock)	1	1	1	1
1	1330438	Terminal (Socket)	2	2	2	2
2	. . . . .	Connector Assembly (CRP275) End Cap	1	1	1	1
2	1351681	Connector	1	1	1	1
3	. . . . .	Connector Assembly (CPS252) Seat Connector	1	1	1	1
3	1493430	Connector (6 Way Housing)	1	1	1	1
3	1529052	Connector (Secondary Lock)	1	1	1	1
3	1330438	Terminal (Socket)	6	6	6	6
4	. . . . .	Connector Assembly (CPS290) MLM	1	..	1	..
4	4176575	Connector	1	..	1	..
4	1502626	Connector (Secondary Lock)	1	..	1	..
4	1330438	Terminal (Socket)	7	..	7	..
4	1484377	Plug	1	..	1	..

©2026 HYSTER COMPANY

KEY:
A: Type S with MLM
B: Type S without MLM
C: With MLM
D: Without MLM

ITEM	PART NO.	DESCRIPTION	QTY A	QTY B	QTY C	QTY D
5	. . . . .	Connector Assembly (CRP531) To Chassis Harness	1	1	1	1
5	4176921	Connector	1	1	1	1
5	1463138	Terminal (Pin)	17	10	15	6
5	1330437	Terminal (Pin)	2	2	2	2
5	1484377	Plug	1	8	3	12
5	4693546	Nut	1	1	1	1
6	. . . . .	Connector Assembly (CPS536) Aux Type S Disconnect Button Harness	1	1	..	..
6	1489656	Connector (4-Way)	1	1	..	..
6	1489657	Connector (Secondary Lock)	1	1	..	..
6	1330438	Terminal (Socket)	4	4	..	..
7	1616345	Strap Clamp	1	1	1	1
8	4140361	Cable Clip	1	1	1	1
9	4177145	Boot	1	1	1	1
10	4027973	Boot	1	1	1	1
11	4215569	Boot	1	1	1	1
12	4317515	Boot	1	..	1	..
13	4027974	Boot	1	1	..	..

©2026 HYSTER COMPANY

WIRE HARNESS (FIGURE 11-135)
SEAT — MECHANICAL SUSPENSION

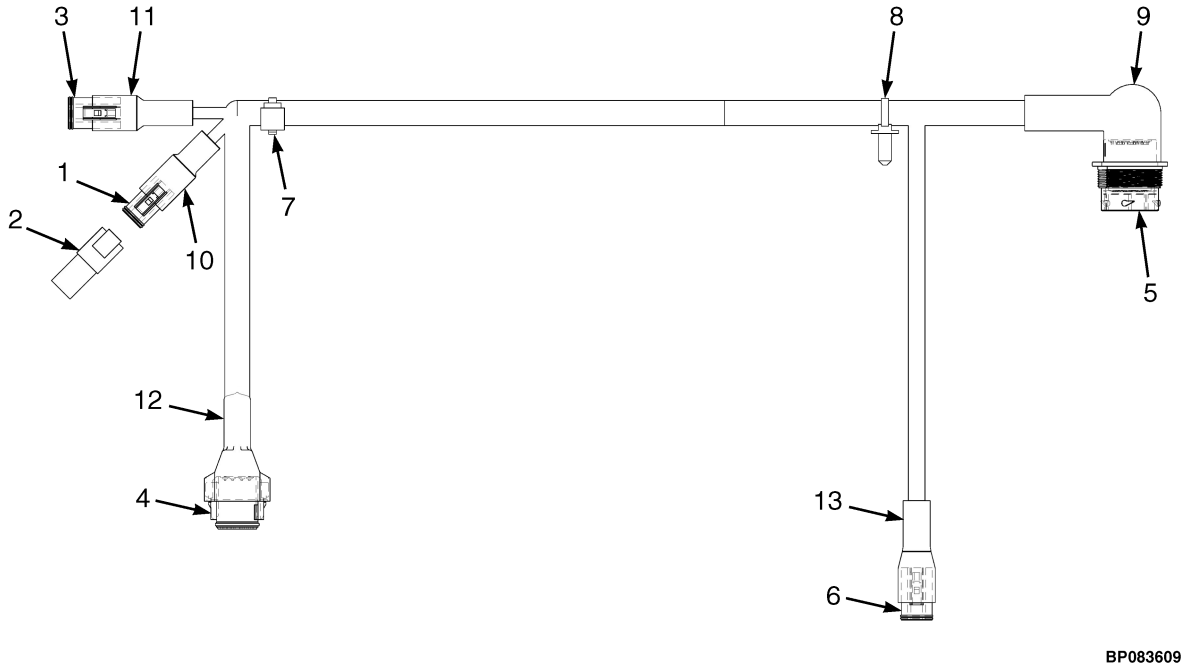

KEY:
A: Type S with MLM
B: Type S without MLM
C: With MLM
D: Without MLM

ITEM	PART NO.	DESCRIPTION	QTY A	QTY B	QTY C	QTY D
	4715485	Wire Harness - Seat (Air Ride, Type-S w/ MLM)	1	..	..	..
	4715486	Wire Harness - Seat (Air Ride, Type-S w/o MLM)	..	1	..	..
	4715483	Wire Harness - Seat (Mech-Susp w/ MLM)	..	..	1	..
	4715481	Wire Harness - Seat (Mech-Susp w/o MLM)	..	..	..	1
1	. . . . .	Connector Assembly (CPS275) Seat Belt	1	1	1	1
1	1490242	Connector (2 Way)	1	1	1	1
1	1490243	Connector (Secondary Lock)	1	1	1	1
1	1330438	Terminal (Socket)	2	2	2	2
2	. . . . .	Connector Assembly (CRP275) End Cap	1	1	1	1
2	1351681	Connector	1	1	1	1
3	. . . . .	Connector Assembly (CPS252) Seat Connector	1	1	1	1
3	1493430	Connector (6 Way Housing)	1	1	1	1
3	1529052	Connector (Secondary Lock)	1	1	1	1
3	1330438	Terminal (Socket)	6	6	6	4
3	1484377	Plug	..	..	..	2
4	. . . . .	Connector Assembly (CPS290) MLM	1	..	1	..
4	4176575	Connector	1	..	1	..
4	1502626	Connector (Secondary Lock)	1	..	1	..
4	1330438	Terminal (Socket)	7	..	7	..

KEY:
A: Type S with MLM
B: Type S without MLM
C: With MLM
D: Without MLM

ITEM	PART NO.	DESCRIPTION	QTY A	QTY B	QTY C	QTY D
4	1484377	Plug	1	..	1	..
5	. . . . .	Connector Assembly (CRP531) To Chassis Harness	1	1	1	1
5	4176921	Connector	1	1	1	1
5	1463138	Terminal (Pin)	17	10	15	6
5	1330437	Terminal (Pin)	2	2	2	..
5	1484377	Plug	1	8	3	14
6	. . . . .	Connector Assembly (CPS536) Aux Type S Disconnect Button Harness	1	1	..	..
6	1489656	Connector (4-Way)	1	1	..	..
6	1489657	Connector (Secondary Lock)	1	1	..	..
6	1330438	Terminal (Socket)	4	4	..	..
7	1616345	Strap Clamp	1	1	1	1
8	4140361	Cable Clip	1	1	1	1
9	4177145	Boot	1	1	1	1
10	4027973	Boot	1	1	1	1
11	4215569	Boot	1	1	1	1
12	4317515	Boot	1	..	1	..
13	4027974	Boot	1	1	..	..

See Service Manual for service procedures.
©2026 HYSTER COMPANY

WIRE HARNESS (FIGURE 11-136)
UPPER MAST WORK LIGHT

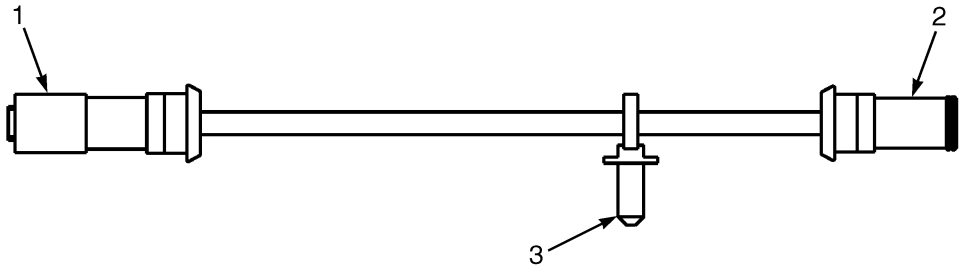

BP083160

ITEM	PART NO.	DESCRIPTION	QTY
	4690545	Wire Harness - Upper Mast Work Light	2
	4695664	Wire Harness - Upper Mast Work Light	2
	4695485	Wire Harness - Upper Mast Work Light	2
	4695487	Wire Harness - Upper Mast Work Light	2
	4695488	Wire Harness - Upper Mast Work Light	2
	4695489	Wire Harness - Upper Mast Work Light	2
	4695491	Wire Harness - Upper Mast Work Light	2
	4695492	Wire Harness - Upper Mast Work Light	2
	4700207	Wire Harness - Upper Mast Work Light	2
	4700322	Wire Harness - Upper Mast Work Light	2
	4700323	Wire Harness - Upper Mast Work Light	2
	4700208	Wire Harness - Upper Mast Work Light	2
	4700211	Wire Harness - Upper Mast Work Light	2
	4700210	Wire Harness - Upper Mast Work Light	2
	4700240	Wire Harness - Upper Mast Work Light	2
	4700241	Wire Harness - Upper Mast Work Light	2
	4700242	Wire Harness - Upper Mast Work Light	2
	4700243	Wire Harness - Upper Mast Work Light	2
	4700244	Wire Harness - Upper Mast Work Light	2
	4700245	Wire Harness - Upper Mast Work Light	2
	4700262	Wire Harness - Upper Mast Work Light	2
	4700263	Wire Harness - Upper Mast Work Light	2
	4700264	Wire Harness - Upper Mast Work Light	2
	4700265	Wire Harness - Upper Mast Work Light	2
	4700266	Wire Harness - Upper Mast Work Light	2
	4700267	Wire Harness - Upper Mast Work Light	2
	4700268	Wire Harness - Upper Mast Work Light	2
1	. . . . .	Connector Assembly (CRP569/CRP566) Lower Mast Light Harness	1
1	4276308	Connector	1
1	1330414	Connector (Secondary Lock)	1
1	1330437	Terminal (Pin)	2
2	. . . . .	Connector Assembly (CPS314/CPS315) Upper Mast Work Light	1
2	4276171	Connector	1
2	1490243	Connector (Secondary Lock)	1
2	1330438	Terminal (Socket)	2

ITEM	PART NO.	DESCRIPTION	QTY
3	2004005	Strap Clamp	2

©2026 HYSTER COMPANY

WIRE HARNESS (FIGURE 11-137)

WIRE TAKE-UP

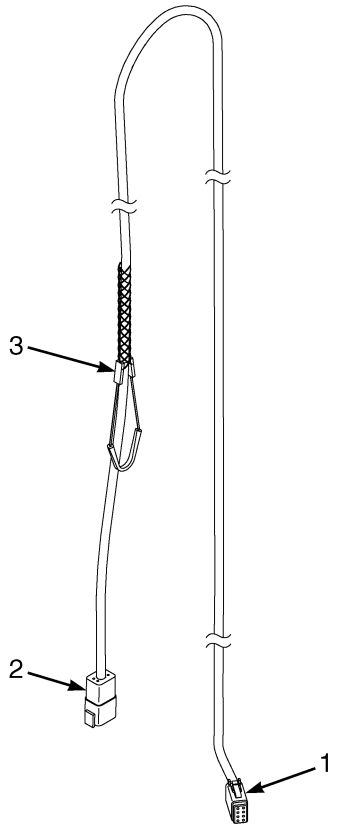

KEY:
A: 2LFL
B: 3FFL

ITEM	PART NO.	DESCRIPTION	QTY A	QTY B
	4690615	Cable Assy - Power to Carriage (LH 2920 / 2728)	1	..
	4690617	Cable Assy - Power to Carriage (LH 3020 / 2828)	1	..
	4690618	Cable Assy - Power to Carriage (LH 3120 / 2928)	1	..
	4690619	Cable Assy - Power to Carriage (LH 3220 / 3028)	1	..
	4690620	Cable Assy - Power to Carriage (LH 3320 / 3128)	1	..
	4690621	Cable Assy - Power to Carriage (LH 3420 / 3228)	1	..
	4690622	Cable Assy - Power to Carriage (LH 3520 / 3328)	1	..
	4690623	Cable Assy - Power to Carriage (LH 3620 / 3428)	1	..
	4690624	Cable Assy - Power to Carriage (LH 3720 / 3528)	1	..
	4690625	Cable Assy - Power to Carriage (LH 3860 / 3628)	1	..
	4690627	Cable Assy - Power to Carriage (LH 4060 / 3828)	1	..
	4690628	Cable Assy - Power to Carriage (LH 4160 / 3928)	1	..
	4690629	Cable Assy - Power to Carriage (LH 4260 / 4028)	1	..
	4690630	Cable Assy - Power to Carriage (LH 4360 / 4128)	1	..
	4690631	Cable Assy - Power to Carriage (LH 4460 / 4228)	1	..
	4690633	Cable Assy - Power to Carriage (LH 4660 / 4428)	1	..
	4690634	Cable Assy - Power to Carriage (LH 4760 / 4528)	1	..
	4690636	Cable Assy - Power to Carriage (LH 4960 / 4728)	1	..

KEY:
A: 2LFL
B: 3FFL

ITEM	PART NO.	DESCRIPTION	QTY A	QTY B
	4690641	Cable Assy - Power to Carriage (LH 5460 / 5228)	1	..
	4690643	Cable Assy - Power to Carriage (LH 5660 / 5428)	1	..
	4690647	Cable Assy - Power to Carriage (LH 6060 / 5828)	1	..
	4692190	Cable Assy - Power to Carriage (LH 4460 / 4118)	..	1
	4692191	Cable Assy - Power to Carriage (LH 4610 / 4268)	..	1
	4692707	Cable Assy - Power to Carriage (LH 4760 / 4418)	..	1
	4692709	Cable Assy - Power to Carriage (LH 4910 / 4568)	..	1
	4692710	Cable Assy - Power to Carriage (LH 5060 / 4718)	..	1
	4692711	Cable Assy - Power to Carriage (LH 5210 / 4868)	..	1
	4692712	Cable Assy - Power to Carriage (LH 5360 / 5018)	..	1
	4692713	Cable Assy - Power to Carriage (LH 5510 / 5168)	..	1
	4692715	Cable Assy - Power to Carriage (LH 5660 / 5318)	..	1
	4692717	Cable Assy - Power to Carriage (LH 5810 / 5468)	..	1
	4692735	Cable Assy - Power to Carriage (LH 6110 / 5768)	..	1
	4692742	Cable Assy - Power to Carriage (LH 6410 / 6068)	..	1
	4692747	Cable Assy - Power to Carriage (LH 6860 / 6518)	..	1
	4692752	Cable Assy - Power to Carriage (LH 7310 / 6968)	..	1
1	. . . . .	Connector Assembly (CPS313) Mast Cable	1	1
1	1655172	Connector	1	1
1	1541992	Connector (Secondary Lock)	1	1
1	1463139	Terminal	7	7
1	1484377	Plug	1	1
2	. . . . .	Connector Assembly (CRP569) To Accessory Harness	1	1
2	4168372	Connector	1	1
2	1541989	Connector (Secondary Lock)	1	1
2	1463138	Terminal (Pin)	7	7
2	1484377	Plug	1	1
3	2309831	Grip	1	1

©2026 HYSTER COMPANY

NOTES

WIRE HARNESS (FIGURE 11-138)

ENGINE — IDI WITH E-THROTTLE

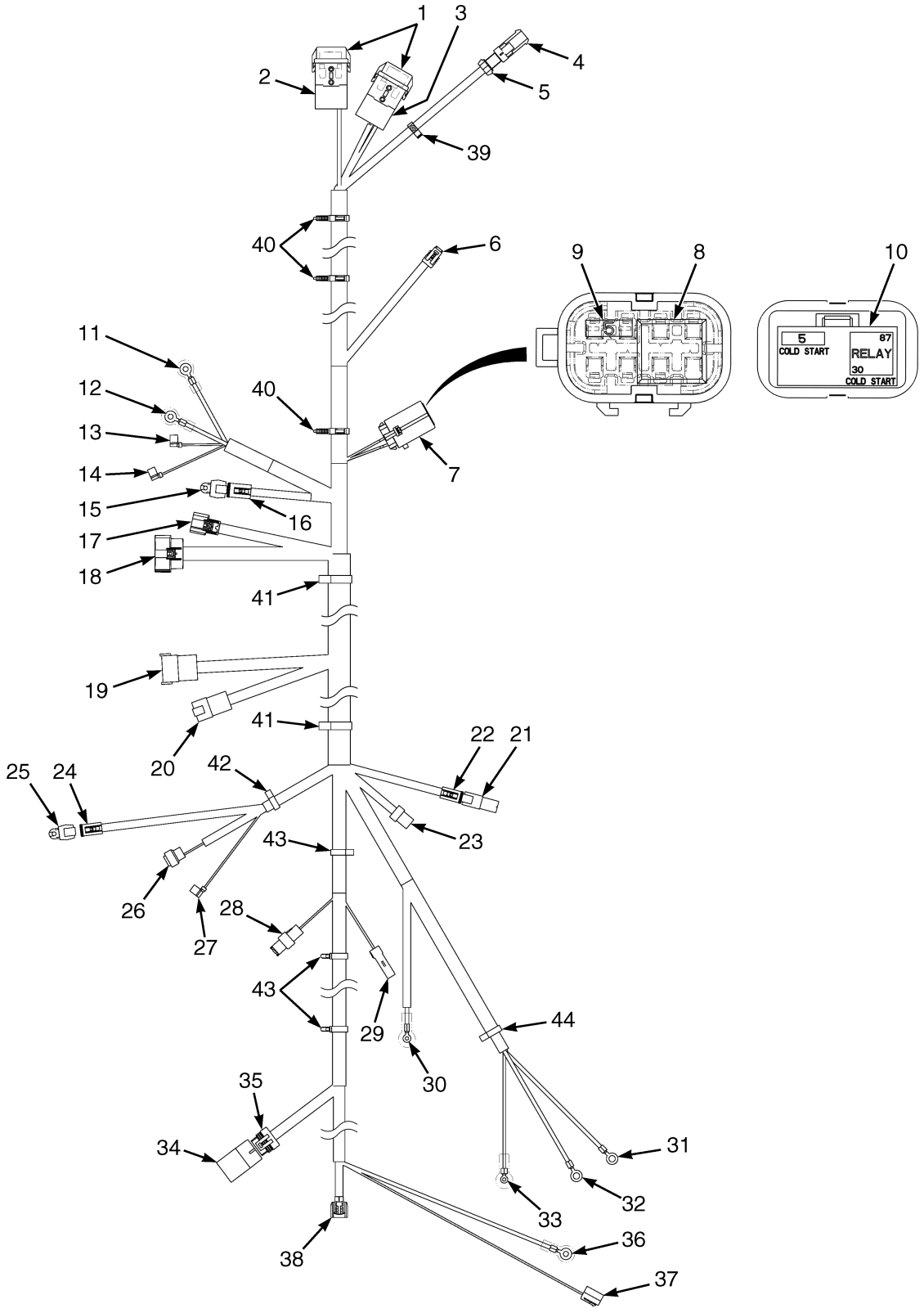

©2026 HYSTER COMPANY

WIRE HARNESS
ENGINE – IDI WITH E-THROTTLE

ITEM	PART NO.	DESCRIPTION	QTY
	4717060	Wire Harness - Yanmar Dsl IDI w/ E-Throttle	1
1	4043316	Fuse (70 Amp)	2
2	. . . . .	Connector Assembly (CPS1168) Glow Plug Fuse	1
2	4159458	Fuse Holder	1
3	. . . . .	Connector Assembly (CRS1154) Alternator Fuse)	1
3	4159458	Fuse Holder	1
4	. . . . .	Connector Assembly (CRP268) End Cap	1
4	4018174	Connector	1
4	1345690	Terminal (E FTG SEC LOCK)	1
4	1482668	Plug (Cavity Plug)	2
5	. . . . .	Connector Assembly (CPS268) Air Filter Sensor	1
5	1539872	Connector	1
5	1345690	Terminal (E FTG SEC LOCK)	1
5	1330355	Terminal	2
6	. . . . .	Connector Assembly (CPS269) Fuel Level Sensor	1
6	1476077	Connector	1
6	1323576	Terminal	2
7	4045422	Cover (Cold Start Fuse Box)	1
7	. . . . .	Connector Assembly (CPS1193) Cold Start Fuse Box	1
7	1521185	Connector	1
7	1521188	Lock	1
7	1521989	Terminal	4
7	1330281	Terminal	2
7	1327164	Terminator	2
8	1528315	Relay (20 Amp)	1
9	1498044	Fuse (5 Amp)	1
10	4699829	Label (8 Pin PDM)	1
11	1520864	Boot	1
11	. . . . .	Connector Assembly (T1162) Glow Plug Relay M	1
11	148614	E-Ring	1
12	1520864	Boot	1
12	. . . . .	Connector Assembly (T1163) Glow Plug Relay B	1
12	148614	E-Ring	1
13	. . . . .	Connector Assembly (T1160) Glow Plug Relay E	1
13	1402823	Terminal	1
14	. . . . .	Connector Assembly (T1161) Glow Plug Relay S	1
14	1402823	Terminal	1
15	4036873	Cap (6 Way)	1
16	. . . . .	Connector Assembly (CPS1311) Current Amplifier	1
16	1493430	Connector (6 Way Housing)	1
16	1529052	Connector (Secondary Lock)	1
16	1330438	Terminal (Socket)	5
16	1484377	Plug	1
17	. . . . .	Connector Assembly (CRS15) iBox I1 (☞Figure 11-22, ☞Figure 11-21)	1
17	4135137	Connector	1
17	4137207	Terminal (Socket)	5
17	4331375	Plug	1
17	4655880	Terminal (MX150, 14-16 AWG)	2
18	. . . . .	Connector Assembly (CRS16) iBox I2 (☞Figure 11-22, ☞Figure 11-21)	1
18	4135138	Connector (MX150, Keying Option A)	1

WIRE HARNESS
ENGINE – IDI WITH E-THROTTLE

ITEM	PART NO.	DESCRIPTION	QTY
18	4137207	Terminal (Socket)	15
18	4331375	Plug	5
19	. . . . .	Connector Assembly (CRP510) Chassis	1
19	1500925	Connector (DT REC 12-Pin)	1
19	1352603	Secondary Lock	1
19	1330437	Terminal (Pin)	11
19	1484377	Plug	1
20	. . . . .	Connector Assembly (CRP511) Chassis	1
20	4047669	Connector (DTP REC 4-Pin)	1
20	1514598	Connector (Secondary Lock)	1
20	1484709	Terminal (Pin)	1
20	1330439	Plug Seal	1
20	866401	Terminal	2
21	. . . . .	Connector Assembly (CRP430) Type S Jumper	1
21	4321306	Connector	1
22	. . . . .	Connector Assembly (CPS430) To Type-S Interlock Switch	1
22	1490242	Connector (2 Way)	1
22	1490243	Connector (Secondary Lock)	1
22	1363886	Terminal (Socket)	2
23	. . . . .	Connector Assembly (CPS1132) Engine RPM Sensor	1
23	1546673	Connector (TISS)	1
23	1323576	Terminal	3
24	. . . . .	Connector Assembly (CPS1312) Throttle Actuator	1
24	1490242	Connector (2 Way)	1
24	1490243	Connector (Secondary Lock)	1
24	1330438	Terminal (Socket)	2
25	4035905	Cap (DT 2-Way)	1
26	. . . . .	Connector Assembly (CRP1314) Fuel/Water Separator Sensor	1
26	. . . . .	Connector	1
26	. . . . .	Terminal	2
27	. . . . .	Connector Assembly (T1111) Oil Pressure Switch	1
27	1402823	Terminal	1
28	. . . . .	Connector Assembly (CPS1310) Fuel Shut Off Solenoid	1
28	1582484	Connector	1
28	2045134	Connector	1
29	. . . . .	Connector Assembly (CRP1092) Cold Start Aid	1
29	1582486	Connector	1
29	2098280	Connector	1
30	1520864	Boot	1
30	. . . . .	Connector Assembly (T1164) Glow Plug	1
30	196196	E-Ring	1
31	. . . . .	Connector Assembly (T1223) Starter Stud	1
31	148615	E-Ring	1
32	. . . . .	Connector Assembly (T1221) Starter Stud	1
32	148615	E-Ring	1
33	1520864	Boot	1
33	. . . . .	Connector Assembly (T1220) Starter Solenoid	1
33	1550626	E-Ring	1
34	. . . . .	Connector Assembly (CRP1313) End Cap	1
34	4074472	Connector	1

See Service Manual for service procedures.
©2026 HYSTER COMPANY

WIRE HARNESS

ENGINE – IDI WITH E-THROTTLE

ITEM	PART NO.	DESCRIPTION	QTY
34	1323581	Plug	6
35	. . . . .	Connector Assembly (CPS1313) Throttle Position Sensor	1
35	1525584	Connector	1
35	1323576	Terminal	6
36	1520864	Boot	1
36	. . . . .	Connector Assembly (T1150) Alternator Stud	1
36	148614	E-Ring	1
37	. . . . .	Connector Assembly (CPS1151) Alternator Connector	1
37	1547368	Connector Body	1
37	1565098	Terminal	2
38	. . . . .	Connector Assembly (CRP1309) Water Temp Sensor	1
38	4274588	Connector	1
38	4612829	Terminal	2
39	1509888	Clip (Conduit)	1
40	1608857	Clip	3
41	4034685	Clip	2
42	1500901	Clip (Conduit)	1
43	1402815	Clip	3
44	1509890	Clip	1

©2026 HYSTER COMPANY

WIRE HARNESS (FIGURE 11-139)
ENGINE — IDI WITH E-THROTTLE (ALTERNATE)

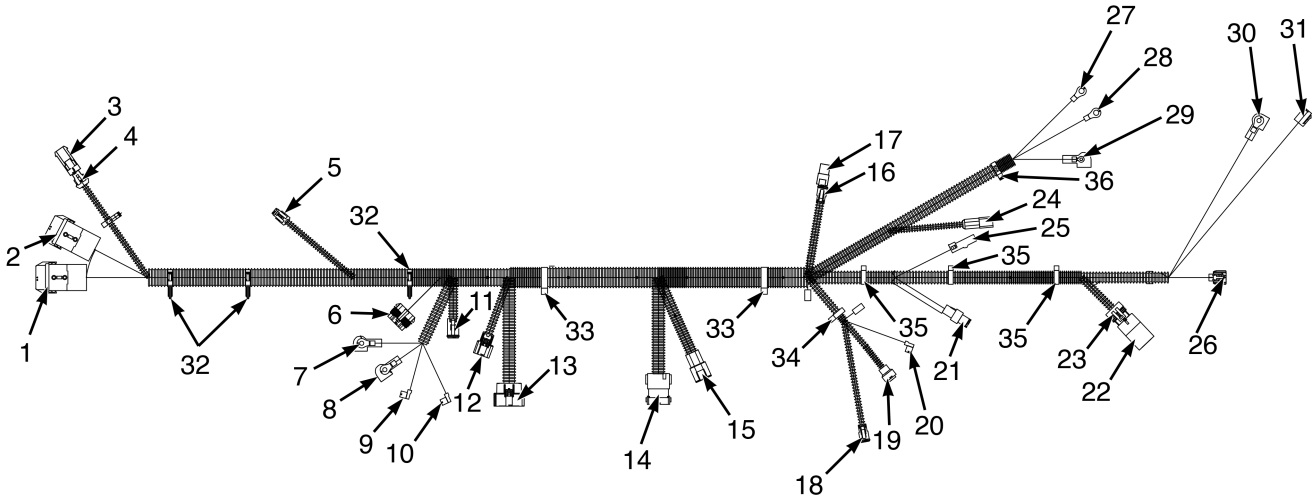

BP084630

©2026 HYSTER COMPANY

WIRE HARNESS

ENGINE – IDI WITH E-THROTTLE (ALTERNATE)

ITEM	PART NO.	DESCRIPTION	QTY
	4738906	Wire Harness (IDI w/ E-Throttle)	1
1	. . . . .	Connector Assembly (CPS1168) Glow Plug Fuse	1
1	4159458	Fuse Holder	1
2	. . . . .	Connector Assembly (CRS1154) Alternator Fuse	1
2	4159458	Fuse Holder	1
3	. . . . .	Connector Assembly (CRP268) Air Filter Sensor End Cap	1
3	4018174	Connector	1
3	1482668	Plug (Cavity Plug)	2
4	. . . . .	Connector Assembly (CPS268) Air Filter Sensor	1
4	1539872	Connector	1
4	1345690	Terminal (E FTG SEC LOCK)	1
4	1330355	Terminal	2
5	. . . . .	Connector Assembly (CPS269) Fuel Level Sensor	1
5	1476077	Connector	1
5	1323576	Terminal	2
6	. . . . .	Connector Assembly (CPS1193) Cold Start Fuse Box	1
6	1521185	Connector	1
6	1521188	Lock	1
6	1521989	Terminal	4
6	1330281	Terminal	2
6	1327164	Terminator	2
7	. . . . .	Connector Assembly (T1162) Glow Plug Relay M	1
7	148614	E-Ring	1
8	. . . . .	Connector Assembly (T1163) Glow Plug Relay B	1
8	148614	E-Ring	1
9	. . . . .	Connector Assembly (T1160) Glow Plug Relay E	1
9	1402823	Terminal	1
10	. . . . .	Connector Assembly (T1161) Glow Plug Relay S	1
10	1402823	Terminal	1
11	. . . . .	Connector Assembly (CPS1311) Current Amplifier	1
11	1493430	Connector (6 Way Housing)	1
11	1529052	Connector (Secondary Lock)	1
11	1330438	Terminal (Socket)	5
11	1484377	Plug	1
12	. . . . .	Connector Assembly (CRS15) iBox 3 I1 (☞Figure 11-22, ☞Figure 11-21)	1
12	4135137	Connector	1
12	4137207	Terminal (Socket)	5
12	4655880	Terminal (MX150, 14-16 AWG)	2
12	4331375	Plug	1
13	. . . . .	Connector Assembly (CRS16) iBox 3 I2 (☞Figure 11-22, ☞Figure 11-21)	1
13	4135138	Connector (MX150, Keying Option A)	1
13	4137207	Terminal (Socket)	13
13	4655880	Terminal (MX150, 14-16 AWG)	1
13	4331375	Plug	6
14	. . . . .	Connector Assembly (CRP510) Chassis	1
14	4386201	Connector	1
14	4697340	Terminal	18
15	. . . . .	Connector Assembly (CRP511) Chassis	1
15	4047669	Connector (DTP REC 4-Pin)	1
15	1514598	Connector (Secondary Lock)	1

WIRE HARNESS

ENGINE – IDI WITH E-THROTTLE (ALTERNATE)

ITEM	PART NO.	DESCRIPTION	QTY
15	1484709	Terminal (Pin)	2
15	866401	Terminal	2
16	. . . . .	Connector Assembly (CPS430) To Typer S Inter Switch	1
16	1490242	Connector (2 Way)	1
16	1490243	Connector (Secondary Lock)	1
16	1363886	Terminal (Socket)	2
17	. . . . .	Connector Assembly (CRP430) Type S Jumper	1
17	4321306	Connector	1
18	. . . . .	Connector Assembly (CPS1312) Throttle Actuator	1
18	1480242	Hose	1
18	1480243	Hose	1
18	1330438	Terminal (Socket)	2
19	. . . . .	Connector Assembly (CRP1314) Forward Separator Sensor	1
19	4723859	Connector	1
19	4723858	Terminal	2
20	. . . . .	Connector Assembly (T1111) Oil Pressure Switch	1
20	1402823	Terminal	1
21	. . . . .	Connector Assembly (CPS1310) Fuel Shut Off Solenoid	1
21	2045134	Connector	1
22	. . . . .	Connector Assembly (CRP1313) Throttle Position Sensor End Cap	1
22	4074472	Connector	1
22	1323581	Plug	6
23	. . . . .	Connector Assembly (CPS1313) Throttle Position Sensor	1
23	1525584	Connector	1
23	1323576	Terminal	6
24	. . . . .	Connector Assembly (CPS1169) To Glow Plug Jumper	1
24	2314751	Connector	1
24	4722025	Connector Lock	1
24	4723860	Terminal	1
25	. . . . .	Connector Assembly (CRP1092) Cold Start Aid	1
25	1582486	Connector	1
25	2098280	Connector	1
26	. . . . .	Connector Assembly (CRP1309) Water Temp Sensor	1
26	4274588	Connector	1
26	4612829	Terminal	2
27	. . . . .	Connector Assembly (T1223) Starter Stud	1
27	148615	E-Ring	1
28	. . . . .	Connector Assembly (T1221) Starter Stud	1
28	148615	E-Ring	1
29	. . . . .	Connector Assembly (T1220) Starter Solenoid	1
29	1550626	E-Ring	1
30	. . . . .	Connector Assembly (T1150) Alternator Stud	1
30	148614	E-Ring	1
31	. . . . .	Connector Assembly (CPS1151) Alternator Connector	1
31	1547368	Connector Body	1
31	1565098	Terminal	2
32	1608857	Clip	3
33	4034685	Clip	2
34	1500901	Clip (Conduit)	1
35	1402815	Clip	3

See Service Manual for service procedures.
©2026 HYSTER COMPANY

WIRE HARNESS

ENGINE – IDI WITH E-THROTTLE (ALTERNATE)

ITEM	PART NO.	DESCRIPTION	QTY
36	1509890	Clip	1

©2026 HYSTER COMPANY

WIRE HARNESS (FIGURE 11-140)
TILT PROPORTION VALVE JUMPER

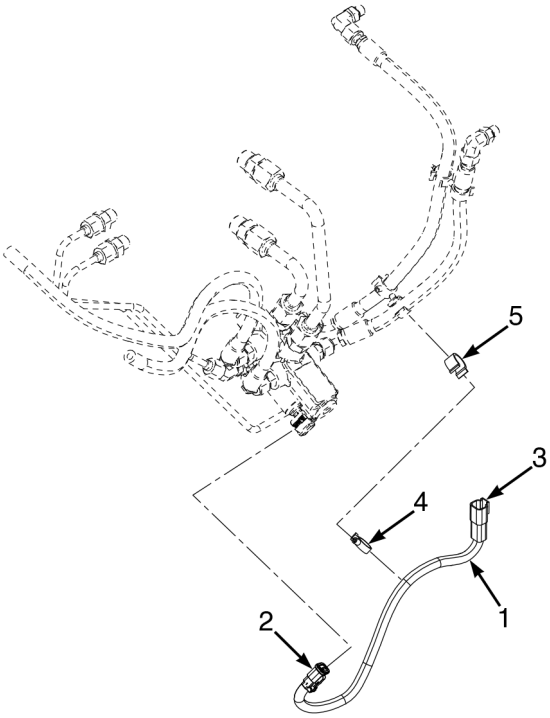

BP084846

ITEM	PART NO.	DESCRIPTION	QTY
	4710694	Wire Harness (Tilt Proportion Valve Jumper)	1
2	. . . . .	Connector Assembly (CPS654) Proportional Valve (Tilt)	1
2	4168181	Connector	1
2	1490243	Connector (Secondary Lock)	1
2	1330438	Terminal (Socket)	2
3	. . . . .	Connector Assembly (CRP561) To Chassis Harness	1
3	1561559	Connector (2 Pin)	1
3	1561755	Connector (Secondary Lock)	1
3	1463138	Terminal (Pin)	2
4	1582605	Clamp	1
5	1543698	Clamp (Swivel)	1

See Service Manual for service procedures.
©2026 HYSTER COMPANY

WIRE HARNESS (FIGURE 11-141)
POWER CABLE — HIGH OUTPUT ALTERNATOR (LPG)

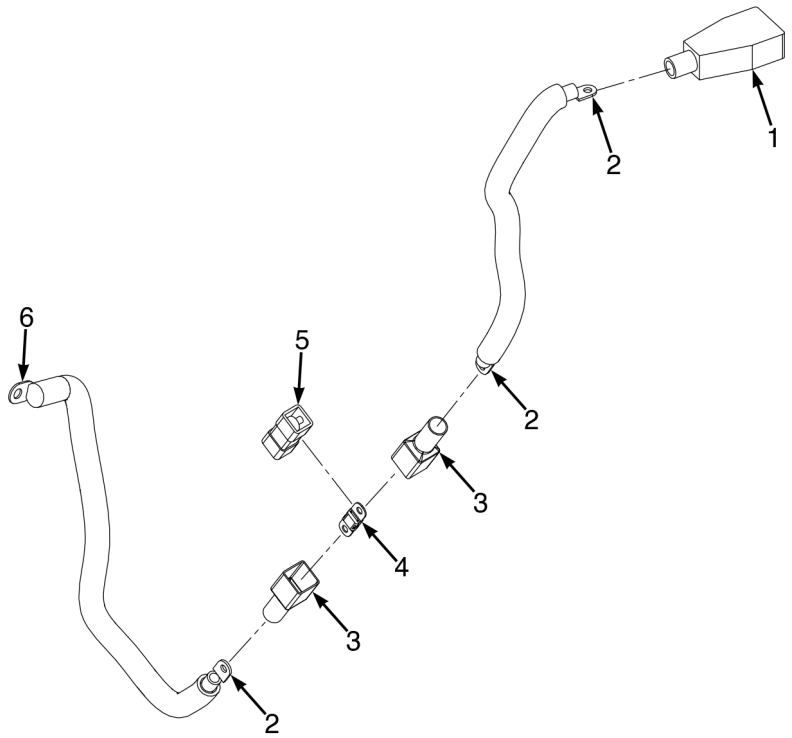

BP085209

ITEM	PART NO.	DESCRIPTION	QTY
	81017382	Power Cable (LPG Fuse Link)	1
1	81025473	Boot	1
2	4696002	Terminal (Power)	3
3	4286097	Boot	2
4	81017419	Fuse (125A)	1
5	4695999	Fuse Holder	1
6	927433	Terminal (Battery Cable)	1

NOTES

©2026 HYSTER COMPANY

12 TRANSMISSION

SECTION 12
TRANSMISSION

DESCRIPTION	PAGE
CLUTCH PACK	
FORWARD AND REVERSE - POWERSHIFT	12-8
CONTROL VALVE	
POWERSHIFT (WET OR DRY BRAKE) - BASIC	12-6
POWERSHIFT (WET OR DRY BRAKE) - DURAMATCH	12-7
DRIVE SHAFT	12-10
TRANSMISSION ASSEMBLY	
HYDROSTATIC - PAGE 1 OF 2 (→ 11/2024)	12-12
HYDROSTATIC - PAGE 1 OF 2 (11/2024 →)	12-14
HYDROSTATIC - PAGE 2 OF 2	12-16
POWERSHIFT (WET OR DRY BRAKE) - PAGE 1 OF 2	12-2
POWERSHIFT (WET OR DRY BRAKE) - PAGE 2 OF 2	12-5

©2026 HYSTER COMPANY

TRANSMISSION ASSEMBLY (FIGURE 12-1)
POWERSHIFT (WET OR DRY BRAKE) — PAGE 1 OF 2

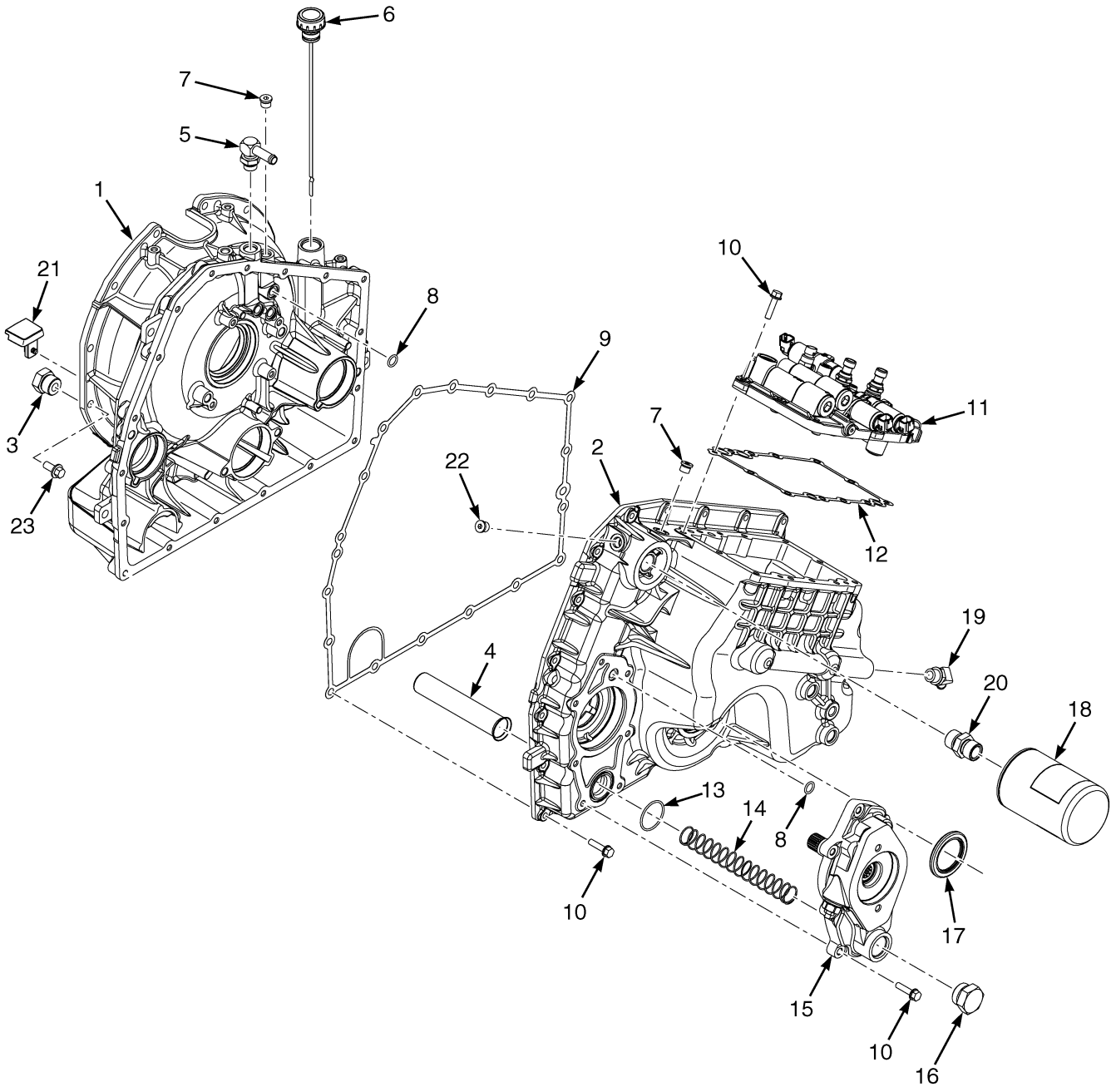

BP240319

©2026 HYSTER COMPANY

TRANSMISSION ASSEMBLY

POWERSHIFT (WET OR DRY BRAKE) – PAGE 1 OF 2

KEY:
A: Wet Brake
B: Dry Brake

ITEM	PART NO.	DESCRIPTION	QTY A	QTY B
	4269486	Transmission Assy (Duramatch) (Constant Displacement Pump)	1	..
	4269487	Transmission Assy (Duramatch) (Variable Displacement Pump)	1	..
	4264374	Transmission Assy (Basic)	..	1
	4303780	Transmission Assy (Basic) (Variable Displacement Pump)	..	1
	4264375	Transmission Assy (Duramatch) (Constant Displacement Pump)	..	1
	4264376	Transmission Assy (Duramatch) (Variable Displacement Pump)	..	1
1	4262332	Housing - Torque Converter	1	1
2	4268867	Housing	1	..
2	4262236	Housing	..	1
3	4251807	Drain Plug	1	1
4	1627465	Screen	1	1
5	~~4249144~~			
	4360803	Fitting	1	1
6	~~4278641~~			
	4351710	Dipstick	..	1
6	4367883	Dipstick (Alternate Part)	1	1
7	~~1579809~~			
	222443	Fitting	2	2
7	16483	O-Ring	1	1
8	87281	O-Ring	2	2
9	4265852	Gasket	1	1
10	4276658	Capscrew	37	37
11	4263787	Transmission Control Valve - Basic (☞Figure 12-3)	..	1
11	**a** 4263788	Transmission Control Valve (Duramatch) (☞Figure 12-4)	1	1
11	**b** 4345143	Transmission Control Valve (Duramatch)	1	1
11	**c** 4356524	Transmission Control Valve (Duramatch) (☞Figure 12-4)	1	1
12	4246309	Gasket	1	1
13	39383	O-Ring	1	1
14	1550572	Spring	1	1
15	~~4307134~~			
	~~4320307~~	Charge Pump - A Flange, High Pressure (Duramatch) (Constant		
	4327859	Displacement Pump)	1	..
15	~~4307134~~			
	~~4320307~~	Charge Pump - A Flange, High Pressure (Duramatch) (Constant		
	4327859	Displacement Pump) (Alternate Part)	1	..
15	4295723	Charge Pump - B Flange, High Pressure (Duramatch) (Variable		
		Displacement Pump)	1	..
15	~~4307135~~			
	~~4320308~~	Charge Pump - B Flange, High Pressure (Duramatch) (Variable		
	4327860	Displacement Pump)) (Alternate Part)	1	..
15	~~4251802~~	Charge Pump - A Flange, Low Pressure (Basic and Premium)		
	4345249	(Constant Displacement Pump)	..	1
15	~~4251803~~	Charge Pump - B Flange, Low Pressure (Duramatch) (Variable		
	4345250	Displacement Pump)	..	1
15	4314256	Kit-O-Ring	..	1

©2026 HYSTER COMPANY

TRANSMISSION ASSEMBLY

POWERSHIFT (WET OR DRY BRAKE) – PAGE 1 OF 2

KEY:
A: Wet Brake
B: Dry Brake

ITEM	PART NO.	DESCRIPTION	QTY A	QTY B
16	. . . . .	Plug	1	..
16	4314255	Kit-Plug	..	1
17	1547447	Oil Seal	1	1
18	~~4701492~~			
	4716269	Transmission Filter	1	..
18	4327803	Transmission Filter (Service Option)	1	..
18	4699759	Transmission Filter - Low Pressure	..	1
18	4020588	Transmission Filter (Service Option)	..	1
19	222502	Fitting	1	1
19	16484	O-Ring	1	1
20	4269512	Fitting - Fliter Post	1	..
20	1558515	Fitting	..	1
21	4299598	Plug	1	1
22	~~1579809~~			
	222443	Fitting	1	1
22	16483	O-Ring	1	1
23	4276659	Capscrew	10	10

FOOTNOTES:

a → 5/2022
b 5/2022 ↔ S/N R177V01415W
c S/N R177V01416W →

©2026 HYSTER COMPANY

TRANSMISSION ASSEMBLY (FIGURE 12-2)
POWERSHIFT (WET OR DRY BRAKE) — PAGE 2 OF 2

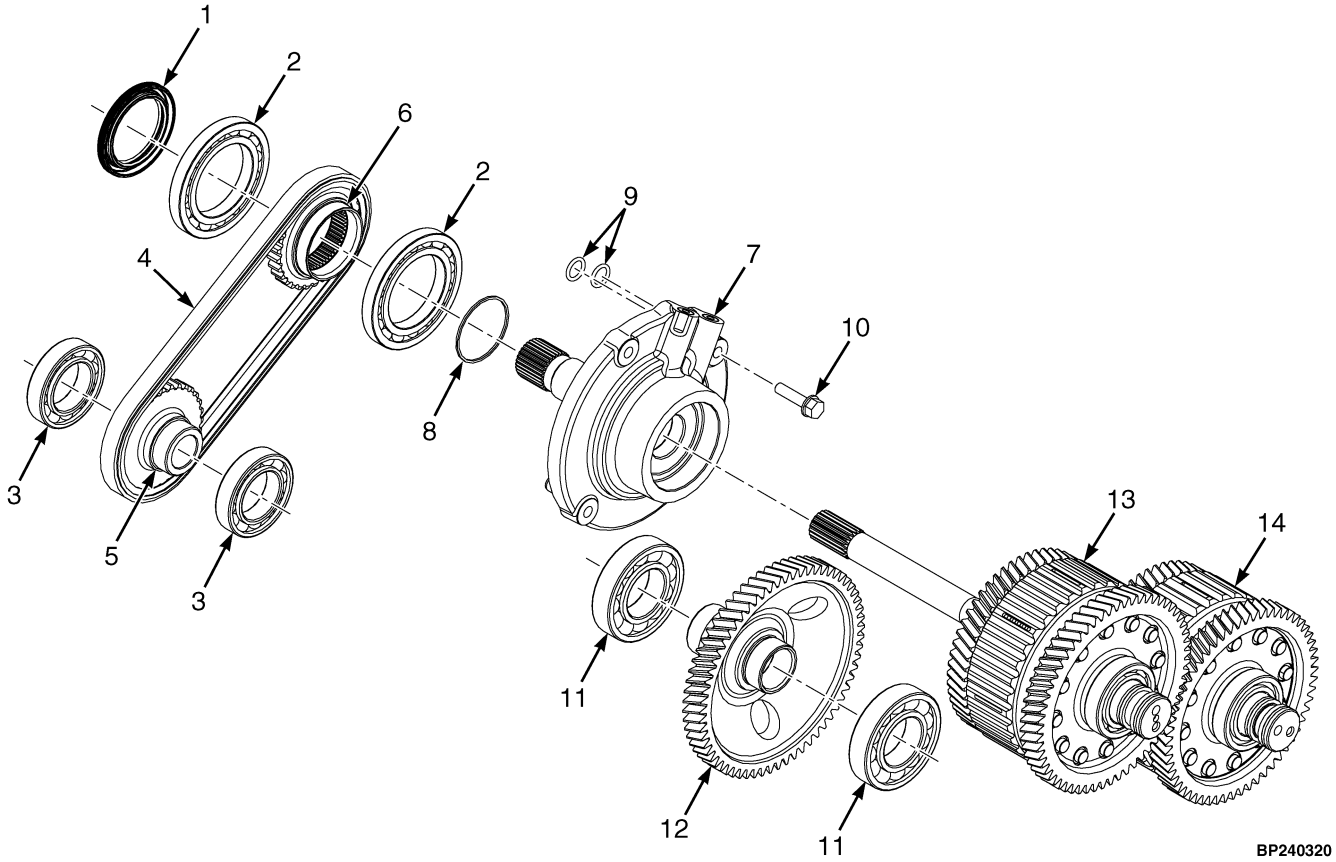

ITEM	PART NO.	DESCRIPTION	QTY
	4269486	Transmission Assy (Duramatch Constant Displacement Pump) (Wet Brake)	1
	4269487	Transmission Assy (Duramatch) (Variable Displacement Pump) (Wet Brake) ...	1
	4264374	Transmission Assy (Basic Dry Brake)	1
	4303780	Transmission Assy (Basic (Variable Displacement Pump) Dry Brake)	1
	4264375	Transmission Assy (Duramatch) (Constant Displacement Pump Dry Brake)	1
	4264376	Transmission Assy (Duramatch) (Variable Displacement Pump) (Dry Brake)	1
1	4247681	Seal	1
2	4243722	Ball Bearing	2
3	44308	Ball Bearing	2
4	4252015	Drive Chain	1
5	4270695	Sprocket	1
6	4252016	Sprocket	1
7	4271033	Stator	1
8	4247680	Seal	1
9	87281	O-Ring	2
10	4276658	Capscrew	6
11	43208	Ball Bearing	2
12	4262846	Transmission Gear - output	1
13	4674457	Clutch Pack - Forward (☞Figure 12-5).....	1
14	4674458	Clutch Pack - Reverse (☞Figure 12-5).....	1

CONTROL VALVE (FIGURE 12-3)

POWERSHIFT (WET OR DRY BRAKE) — BASIC

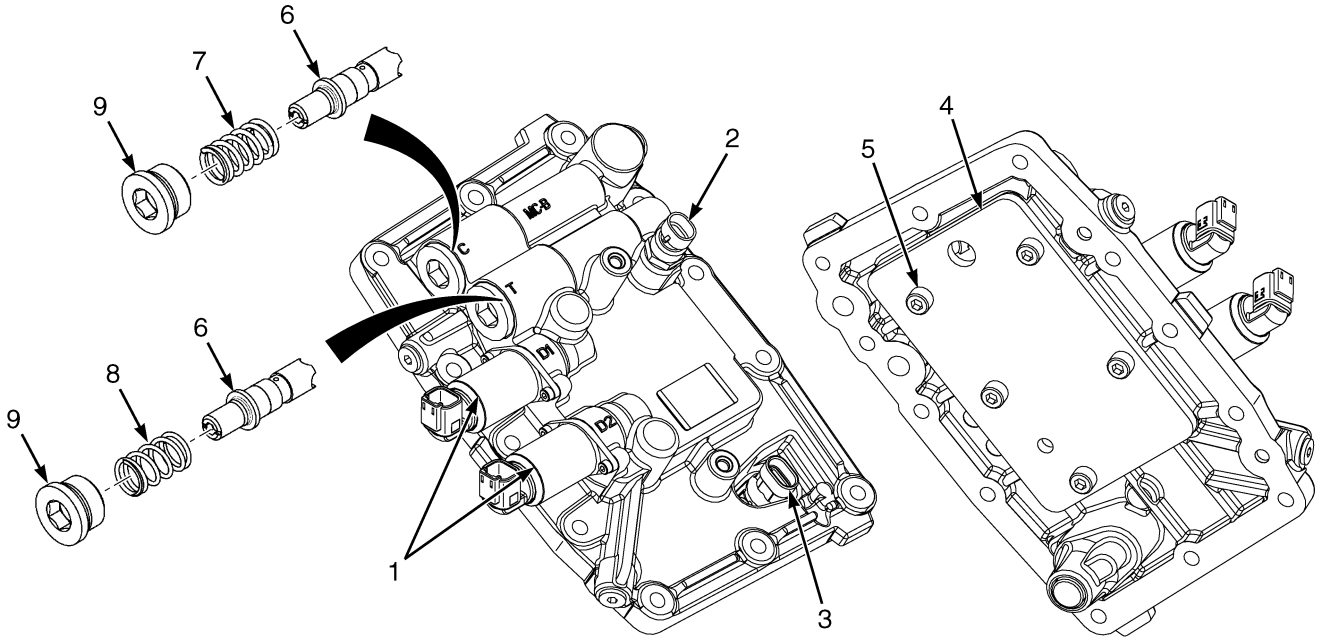

BP240328

ITEM	PART NO.	DESCRIPTION	QTY
	4263787	Transmission Control Valve - Basic	1
1	4282121	Cartridge (Solenoid)	2
2	1515654	Temperature Sensor	1
3	1541231	Sensor (Input Speed, TISS)	1
4	4283350	Gasket	1
4	4283349	Plate , Cover	1
5	4283348	Capscrew	5
6	4283354	Spool	2
7	4283353	Spring (Yellow)	1
8	4283352	Spring (Green)	1
9	4283351	Plug	2
	4282123	Kit - Bottom Plate	1
	a 4282124	Kit - Regulator Spool	1

FOOTNOTES:

a Kit only contains 1 of each.

©2026 HYSTER COMPANY

CONTROL VALVE (FIGURE 12-4)

POWERSHIFT (WET OR DRY BRAKE) — DURAMATCH

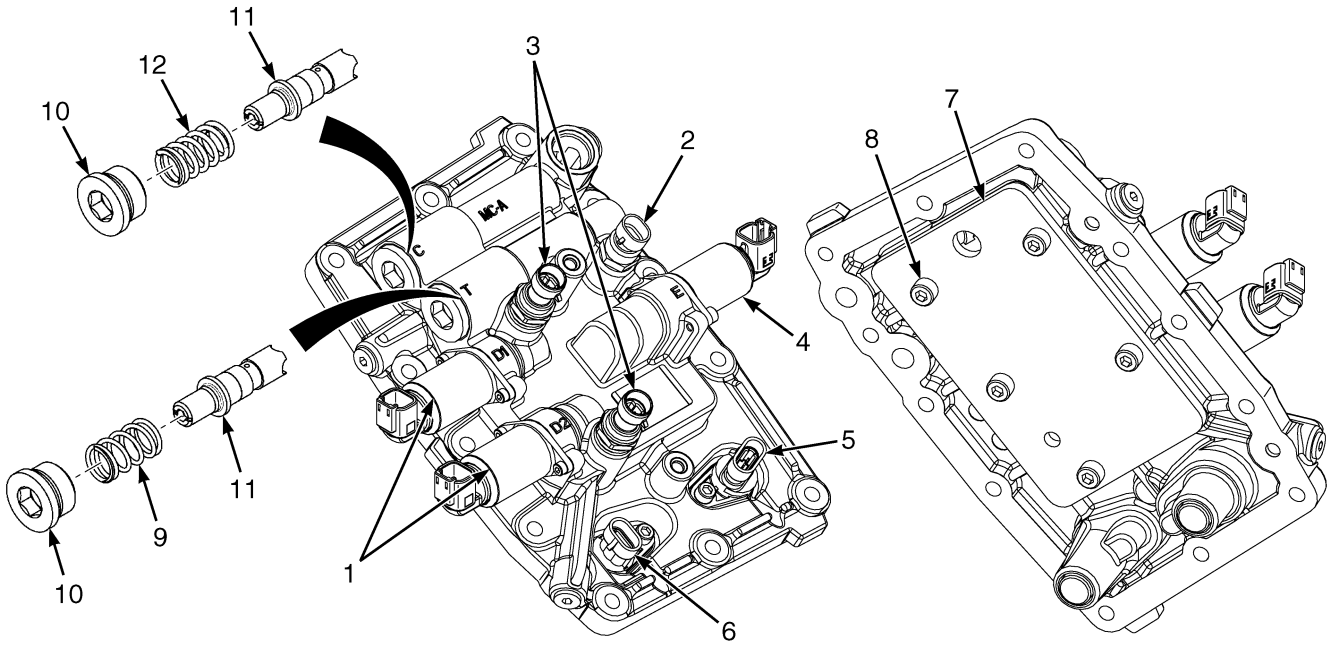

ITEM	PART NO.	DESCRIPTION	QTY
	b 4263788	Transmission Control Valve	1
	c 4356524	Transmission Control Valve	1
1	4282121	Cartridge (Solenoid) (D1 and D2)	2
2	1515654	Temperature Sensor	1
3	**b** 4282125	Sensor (Pressure)	2
3	**c** 4348267	Sensor (Pressure)	2
4	4282122	Cartridge (E)	1
5	1541232	Sensor (Output Speed, TOSS)	1
6	1541231	Sensor (Input Speed, TISS)	1
7	4283350	Gasket	1
8	. . . . .	Capscrew	5
9	. . . . .	Spring (Green)	1
10	. . . . .	Plug	2
11	. . . . .	Spool	2
12	. . . . .	Spring (Yellow)	1
	4282123	Kit - Bottom Plate	1
	a 4282124	Kit - Regulator Spool	1

FOOTNOTES:

a Kit only contains 1 of each.
b → 5/2022
c S/N R177V01416W →

CLUTCH PACK (FIGURE 12-5)
FORWARD AND REVERSE — POWERSHIFT

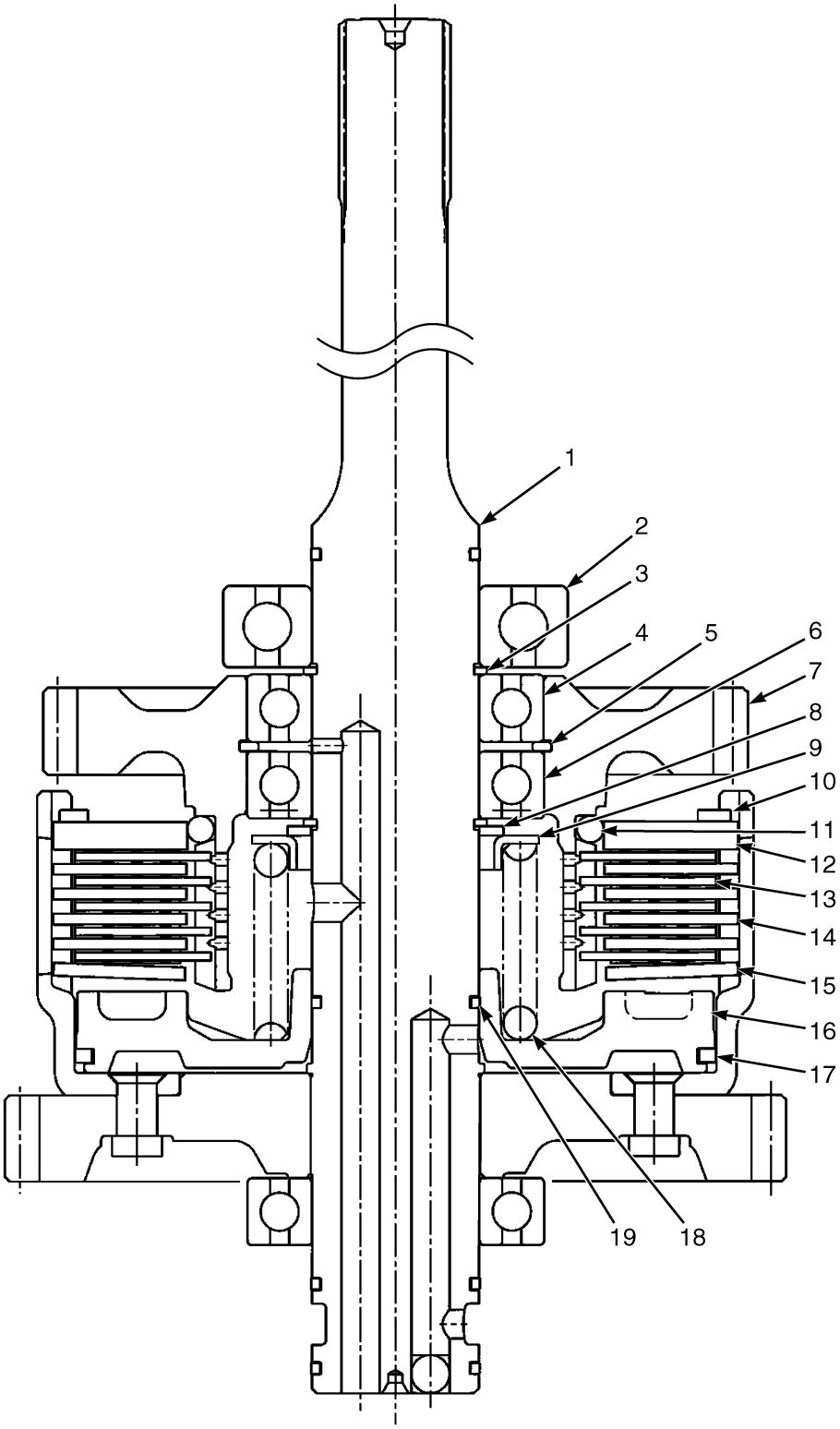

BP240367

©2026 HYSTER COMPANY

KEY:
A: Forward
B: Reverse

ITEM	PART NO.	DESCRIPTION	QTY A	QTY B
	4674457	Clutch Pack - Forward	1	..
	4674458	Clutch Pack - Reverse	..	1
1	4291149	Shaft (Long)	1	..
1	4291148	Shaft (Short)	..	1
2	43207	Ball Bearing	1	1
3	1537459	Snap Ring	2	2
4	~~1581116~~			
	4025477	Ball Bearing	2	2
5	1581107	Snap Ring	1	1
6	124603	Ball Bearing	1	1
7	4291155	Clutch Gear	1	1
8	4291154	Collar	1	1
9	4291153	Spring Guide	1	1
10	1537450	Snap Ring	1	1
11	. . . . .	O-Ring	1	1
12	1537449	Pressure Plate (6.0 mm)	1	1
12	1543094	Pressure Plate (5.8 mm) (Optional)	1	1
12	1543096	Pressure Plate (5.6 mm) (Optional)	1	1
12	1543097	Pressure Plate (5.4 mm) (Optional)	1	1
12	1543098	Pressure Plate (5.2 mm) (Optional)	1	1
13	. . . . .	Friction Plate	5	5
14	. . . . .	Separator Plate	4	4
15	. . . . .	Conical Plate	1	1
16	4291150	Piston	1	1
17	. . . . .	Seal Ring	1	1
18	4291152	Spring	1	1
19	. . . . .	Sealing Ring	1	1
	4291157	Kit-Repair (Clutch Pack)	1	1
	4291156	Kit-Seal (Clutch Pack Seals)	1	1
	1543102	Kit-Clutch Pack Plates	1	1

DRIVE SHAFT (FIGURE 12-6)

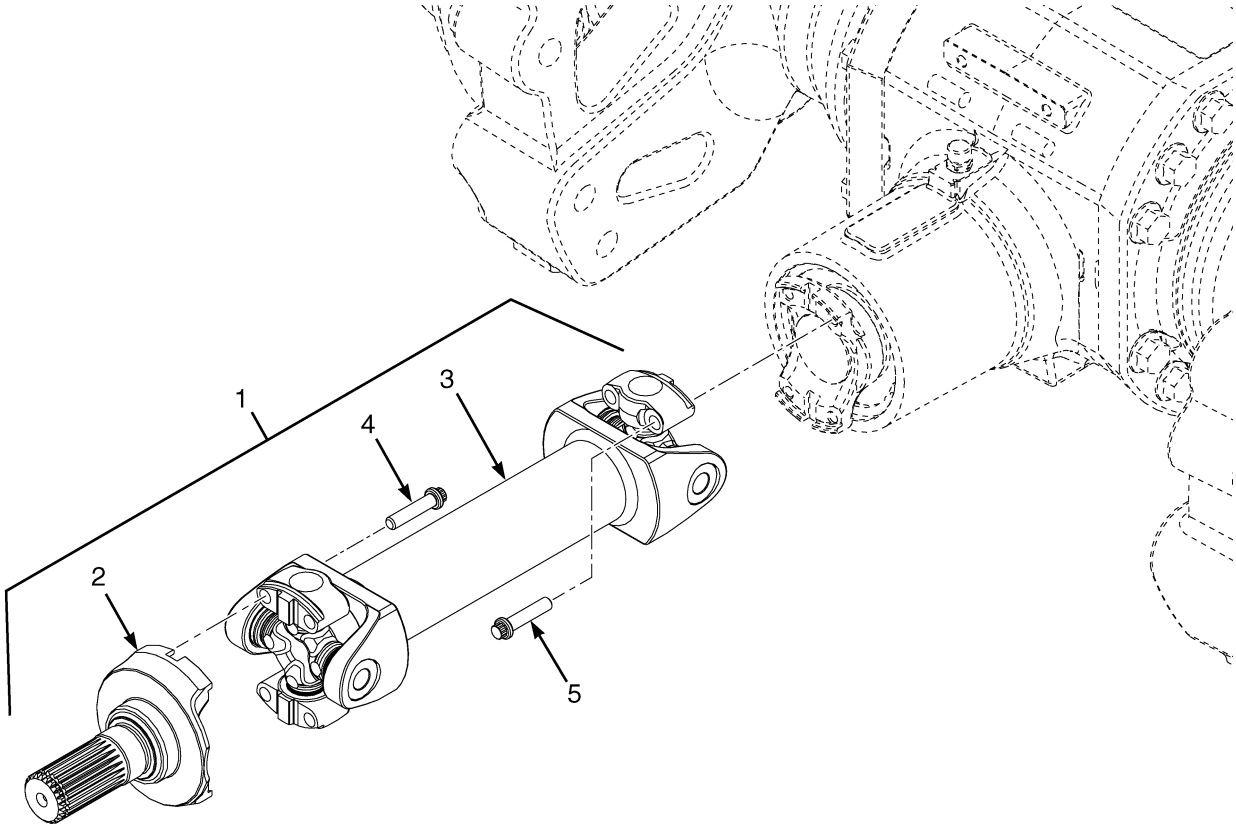

ITEM	PART NO.	DESCRIPTION	QTY
1	**a** 4284686	Drive Shaft (Assembly) (PST)	1
1	**b** 4363186	Drive Shaft (Assembly) (PST)	1
1	**a** 4284688	Drive Shaft (Assembly) (HST)	1
1	**b** 4363188	Drive Shaft (Assembly) (HST)	1
2	4282126	Yoke	1
3	**a** 4277238	Drive Shaft (PST)	1
3	**b** 4363180	Drive Shaft (PST)	1
3	**a** 4277240	Drive Shaft (HST)	1
3	**b** 4363183	Drive Shaft (HST)	1
4	4676481	Capscrew	4
5	4676481	Capscrew	4

FOOTNOTES:

a → S/N R177V01996X

b S/N R177V01997X →

©2026 HYSTER COMPANY

NOTES

TRANSMISSION ASSEMBLY (FIGURE 12-7)

HYDROSTATIC — PAGE 1 OF 2 (→ 11/2024)

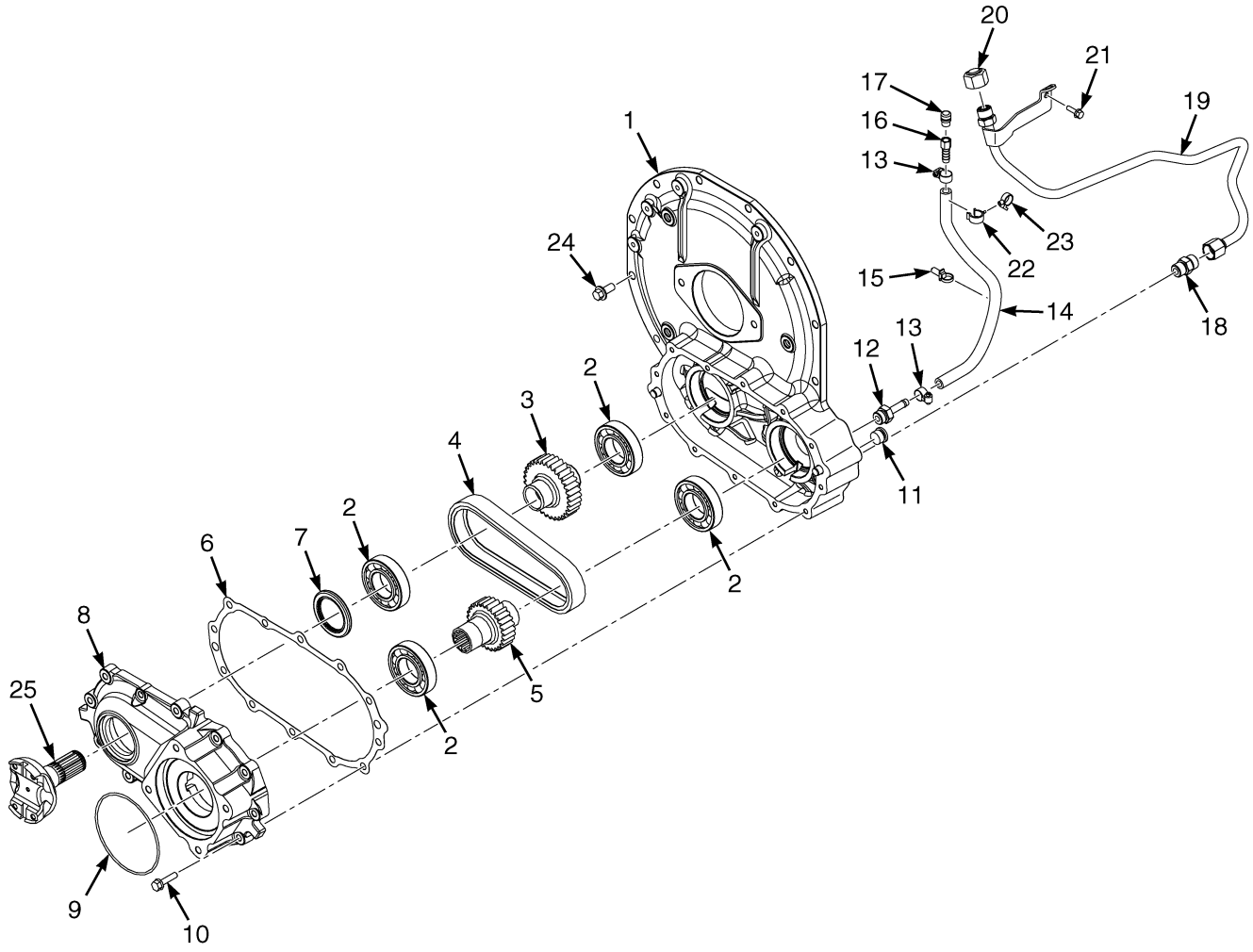

BP240437

©2026 HYSTER COMPANY

TRANSMISSION ASSEMBLY

HYDROSTATIC – PAGE 1 OF 2 (→ 11/2024)

ITEM	PART NO.	DESCRIPTION	QTY
	4277335	Transmission Assy (Hydrostatic)	1
1	4276293	Transmission Housing - HST Chain Drive	1
1	81024093	Transmission Housing - HST Chain Drive (Alternate Part)	1
2	43208	Ball Bearing	4
3	4695151	Sprocket - Output, HST	1
4	4695219	Drive Chain	1
5	4695152	Sprocket	1
6	4681835	Gasket	1
6	4723210	Gasket (HST Chain Housing Cover) (Alternate Part)	1
7	1547447	Oil Seal	1
8	4276298	Housing - Chain Cover	1
9	4270545	O-Ring	1
10	4276658	Capscrew	12
11	~~1589792~~		
	235691	Fitting	1
12	1650229	Fitting	1
13	1614769	Hose Clamp	2
14	4708117	Hose (Transmission Breather)	1
15	4140361	Cable Clip	1
16	4708026	Adapter	1
17	21420	Breather	1
18	**a** ~~6996681~~		
	1473887	Fitting	1
18	~~1495113~~		
	265731	O-Ring	1
18	**c** ~~1589792~~		
	235691	Fitting	1
18	**d** 4014224	Drain Plug	1
19	**a** 4711135	Tube Assy - HST Fill	1
20	**a** 1529016	Fitting (Cap)	1
21	**a** 1527877	Capscrew	1
22	**b** 1542442	Clamp (Swivel)	1
23	**b** 1582605	Clamp	1
24	4276659	Capscrew	9
25	4235217	Yoke	1

FOOTNOTES:

a → 10/2022
b → 11/2024
c 10/2022 ↔ 2/2023
d 2/2023 →

TRANSMISSION ASSEMBLY (FIGURE 12-8)

HYDROSTATIC — PAGE 1 OF 2 (11/2024 →)

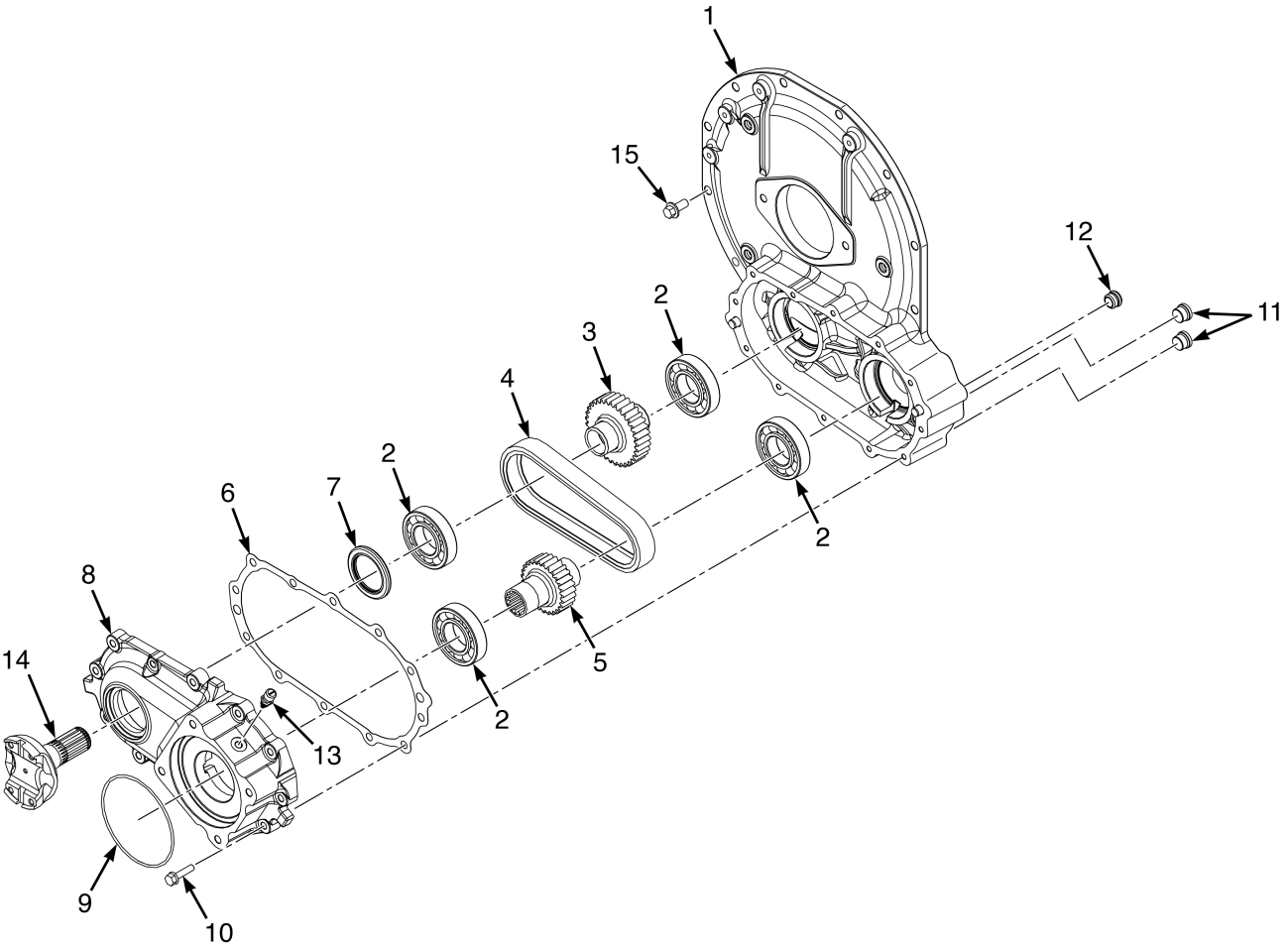

BP240527

©2026 HYSTER COMPANY

TRANSMISSION ASSEMBLY

HYDROSTATIC – PAGE 1 OF 2 (11/2024 →)

ITEM	PART NO.	DESCRIPTION	QTY
	4277335	Transmission Assy (Hydrostatic)	1
1	4276293	Transmission Housing - HST Chain Drive	1
1	81024093	Transmission Housing - HST Chain Drive (Alternate Part)	1
2	43208	Ball Bearing	4
3	4695151	Sprocket - Output, HST	1
4	4695219	Drive Chain	1
5	4695152	Sprocket	1
6	4723210	Gasket (HST Chain Housing Cover)	1
7	1547447	Oil Seal	1
8	4276298	Housing - Chain Cover	1
8	81054819	Housing - Chain Cover (Alternate Part)	1
9	4270545	O-Ring	1
10	4276658	Capscrew	12
11	**a** ~~1589792~~		
	235691	Fitting	2
11	**b** ~~1589792~~		
	235691	Fitting	1
12	4014224	Drain Plug	1
13	1692643	Plug	1
13	81048635	Plug (Alternate Part)	1
14	4235217	Yoke	1
15	4276659	Capscrew	9

FOOTNOTES:

a → 10/2025

b 10/2025 →

TRANSMISSION ASSEMBLY (FIGURE 12-9)
HYDROSTATIC — PAGE 2 OF 2

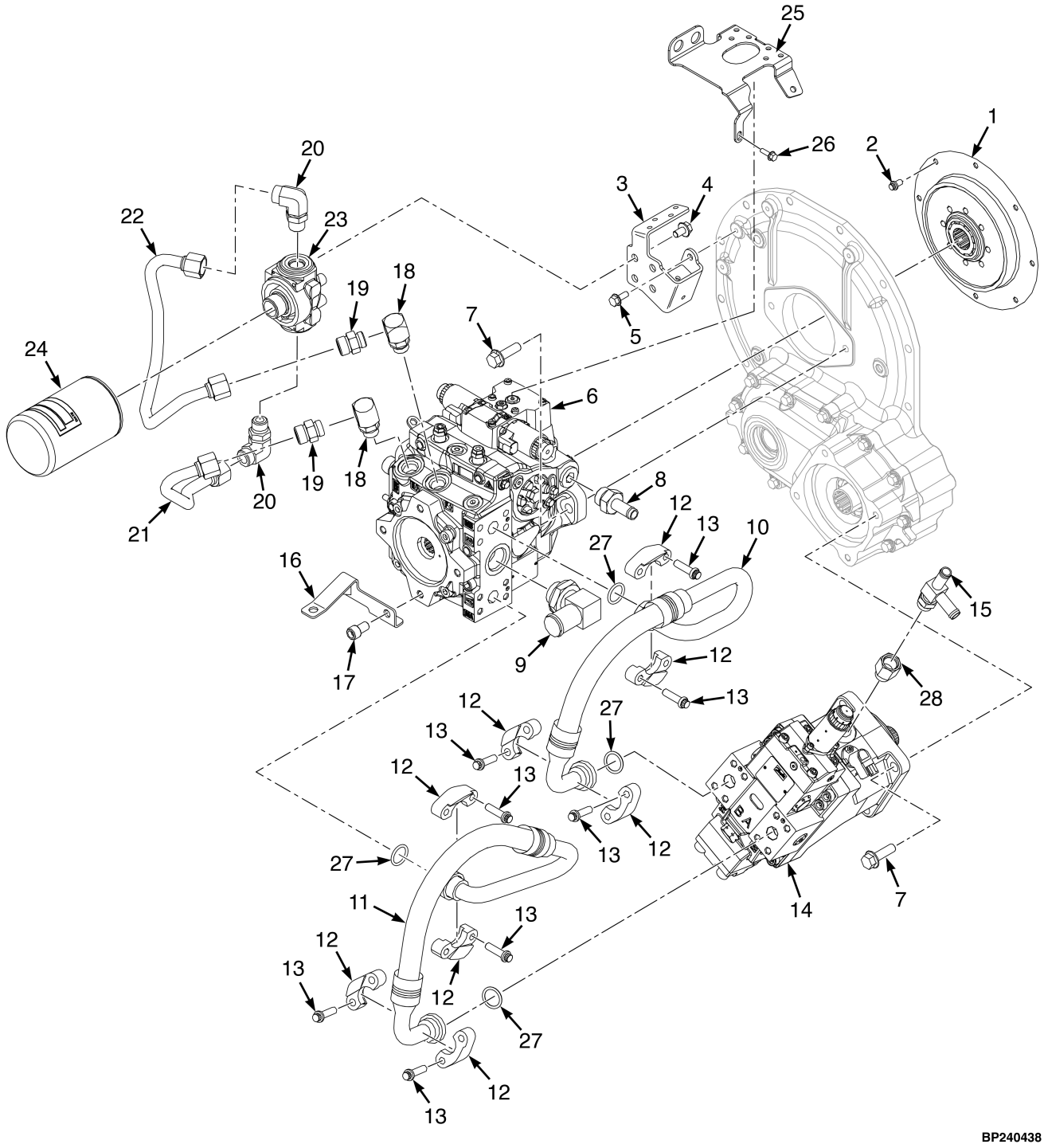

©2026 HYSTER COMPANY

TRANSMISSION ASSEMBLY
HYDROSTATIC – PAGE 2 OF 2

ITEM	PART NO.	DESCRIPTION	QTY
	4277335	Transmission Assy (Hydrostatic)	1
1	4679031	Coupling (HST Pump)	1
2	4676480	Capscrew	8
3	**a** ~~4280415~~		
	4331925	Bracket Wldmt	1
3	**c** 4356130	Bracket Wldmt	1
3	**e** 4737629	Bracket (HST Filter)	1
3	**d** 4390260	Bracket Wldmt	1
3	**h**	Bracket (HST Filter)	1
4	1528778	Capscrew	4
5	1527880	Capscrew	2
6	4698604	Pump-Hydrostatic	1
7	1566853	Capscrew	6
8	1698434	Fitting	1
9	1350273	Fitting	1
10	**a** 4693475	Hose And Tube Assy	1
10	**c** 4721919	Hose And Tube Assy	1
10	**f** 4693475	Hose And Tube Assy	1
11	**a** 4693474	Hose And Tube Assy	1
11	**c** 4721918	Hose And Tube Assy	1
11	**f** 4693474	Hose And Tube Assy	1
12	222535	Fitting	8
13	4696844	Capscrew	16
14	4681252	Hydraulic Motor	1
15	4326266	T-Fitting	1
15	4275118	T-Fitting (Alternate Part)	1
16	4280621	Bracket Wldmt	1
17	296039	Capscrew	1
18	4698772	Fitting	2
19	4698771	Fitting	2
20	1487067	Fitting	2
21	4701696	Tube Assy (Filter HST)	1
21	4726322	Tube Assy (Filter HST) (Alternate Part)	1
22	4701697	Tube Assy (Filter HST)	1
22	4726321	Tube Assy (Filter HST) (Alternate Part)	1
23	4327804	Filter Head	1
24	4716268	Transmission Filter	1
25	**b** 4335167	Bracket	1
26	1527877	Capscrew	1
27	210641	O-Ring	4
28	**g** 1691525	Adapter	1

FOOTNOTES:

a → 10/2022
b → 11/2024
c 10/2022 ↔ 3/2024
d 11/2024 ↔ 10/2025
e 3/2024 ↔ 11/2024
f 3/2024 →
g 10/2022 →
h 10/2025 →

NOTES

©2026 HYSTER COMPANY

13 DRIVE AXLE

SECTION 13
DRIVE AXLE

DESCRIPTION	PAGE
DRIVE AXLE	
CENTER SECTION - DRY BRAKE	13-6
DRIVE AXLE ASSEMBLY	
DRY BRAKE	13-2
WET BRAKE - CENTRAL HOUSING ASSEMBLY	13-10
WET BRAKE - LEFT AND RIGHT ARM ASSEMBLY	13-12
WET BRAKE - SHAFT ASSEMBLY	13-16
WET BRAKE - INPUT FLANGE	13-18
WET BRAKE - DIFFERENTIAL ASSEMBLY	13-19
DRIVE AXLE BRAKE PLUMBING	
DRY BRAKE (→ 10/2021)	13-8
DRY BRAKE (10/2021 →)	13-9
DRIVE WHEEL AND TIRE	
MANUFACTURING OPTION	13-30
STANDARD - H40A-H50A	13-21
STANDARD - H55A-H70A	13-23
DRIVE WHEEL AND TIRE ASSEMBLY	
SOLID - DUAL	13-26
SOLID - WIDE	13-28
DUAL WHEEL ADAPTER	13-20
FENDERS	
WITH ANTI-STATIC STRAP	13-32

©2026 HYSTER COMPANY

DRIVE AXLE ASSEMBLY (FIGURE 13-1)
DRY BRAKE

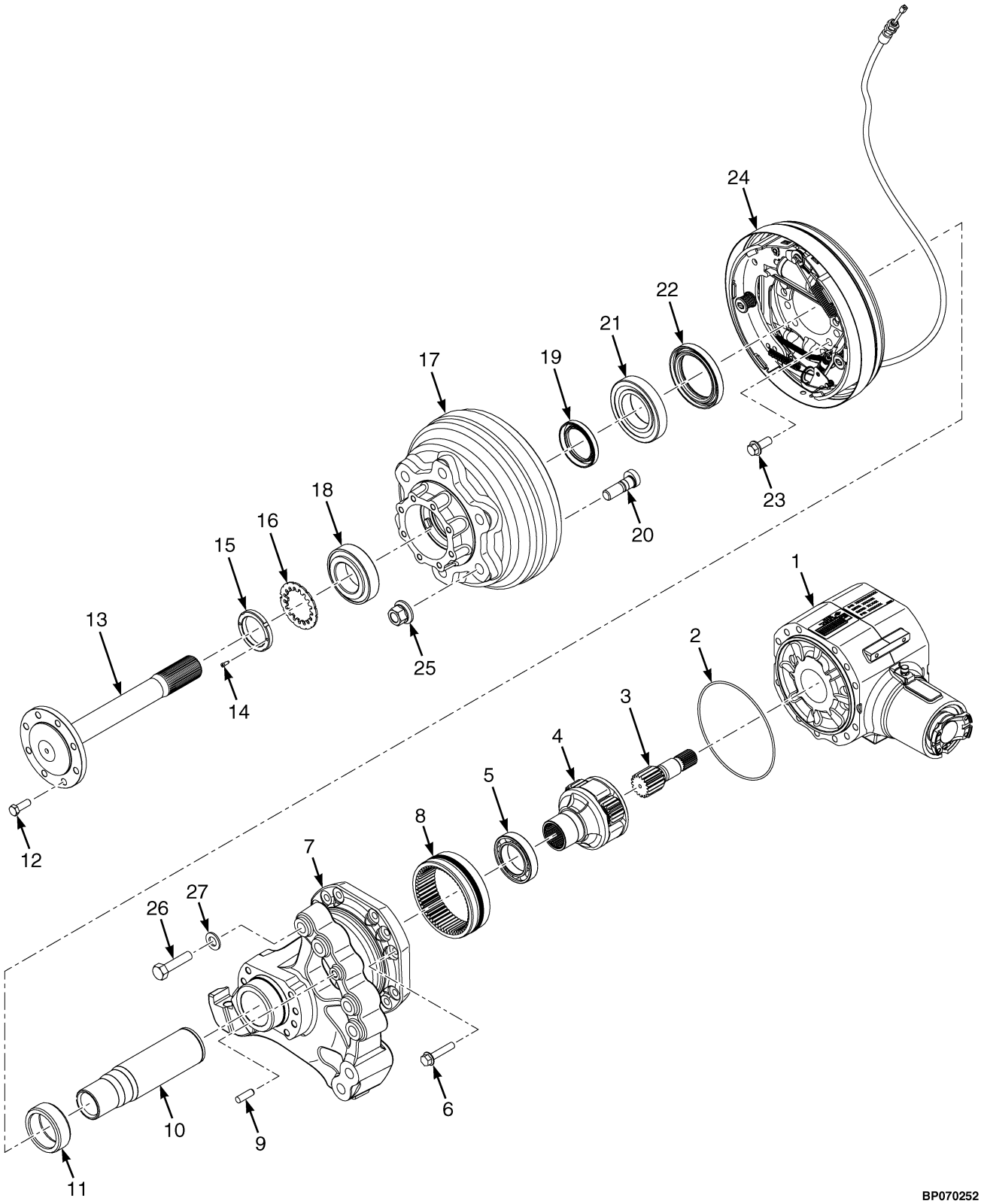

©2026 HYSTER COMPANY

DRIVE AXLE ASSEMBLY
DRY BRAKE

KEY:
A: H40A-H50A
B: H40A-H50A Dual Tire
C: H60A-H70A

ITEM	PART NO.	DESCRIPTION	QTY A	QTY B	QTY C
	4269252	Drive Axle - Dry Brake	1	..	..
	4259172	Drive Axle - Dry Brake	..	..	1
	4258919	Drive Axle - Dry Brake	..	1	..
1	4687160	Drive Axle Center Section (☞Figure 13-2)	1	..	..
1	4687164	Drive Axle Center Section (☞Figure 13-2)	..	1	1
2	18974	O-Ring	2	2	2
3	4273208	Shaft	2	2	2
4	4270647	Gear - Planetary Gear	2	2	2
4	4258971	Gear	1	1	1
5	44312	Ball Bearing	1	1	1
6	1616740	Capscrew	26	26	26
7	4268990	Hanger - RH	1	..	..
7	4256921	Hanger - RH	..	1	1
7	4252232	Hanger - RH	1	1	1
7	4268989	Hanger - LH	1	..	..
7	4256922	Hanger - LH	..	1	1
8	. . . . .	Ring Gear	1	1	1
9	326479	Dowel	1	1	1
10	. . . . .	Spindle	1	1	1
11	1502422	Spacer	1	1	1
12	293646	Capscrew	16	20	20
13	4267178	Axle Shaft	2	..	..
13	4256839	Axle Shaft	..	2	2
14	2081841	Setscrew	2	2	2
15	2080648	Nut	2	2	2
16	4260915	Washer	2	2	2
17	4267367	Hub (Assembly, 6 Lug Brake Drum)	2	..	..
17	. . . . .	Hub Assembly, 8 Lug Brake Drum	..	2	2
17	4267176	Hub (6 Lug Brake Drum)	1	..	..
17	4252073	Wheel Hub (8 Lug Brake Drum)	..	1	1
18	1375486	Bearing	1	1	1
18	2027663	Bearing Set (Tapered) (Optional)	1	1	1
19	4615139	Oil Seal	1	1	1
20	1532337	Wheel Stud	6	..	..
20	4267475	Bolt	..	8	8
21	~~1375492~~				
	2027662	Bearing	1	1	1
21	~~1375492~~				
	2027662	Bearing Set (Tapered) (Optional)	1	1	1
22	2027817	Oil Seal	1	1	1
23	1327246	Bolt	16	16	16
24	4165004	Brake Assy - RH (☞Figure 15-5)	1	1	1
24	4165003	Brake Assy - LH (☞Figure 15-5)	1	1	1
25	1537133	Wheel Nut	12	..	..

DRIVE AXLE ASSEMBLY
DRY BRAKE

KEY:
A: H40A-H50A
B: H40A-H50A Dual Tire
C: H60A-H70A

ITEM	PART NO.	DESCRIPTION	QTY A	QTY B	QTY C
25	1530721	Wheel Nut	..	16	16
26	293710	Capscrew	12	12	12
27	296430	Washer	12	12	12

See Service Manual for service procedures.
©2026 HYSTER COMPANY

NOTES

DRIVE AXLE (FIGURE 13-2)
CENTER SECTION — DRY BRAKE

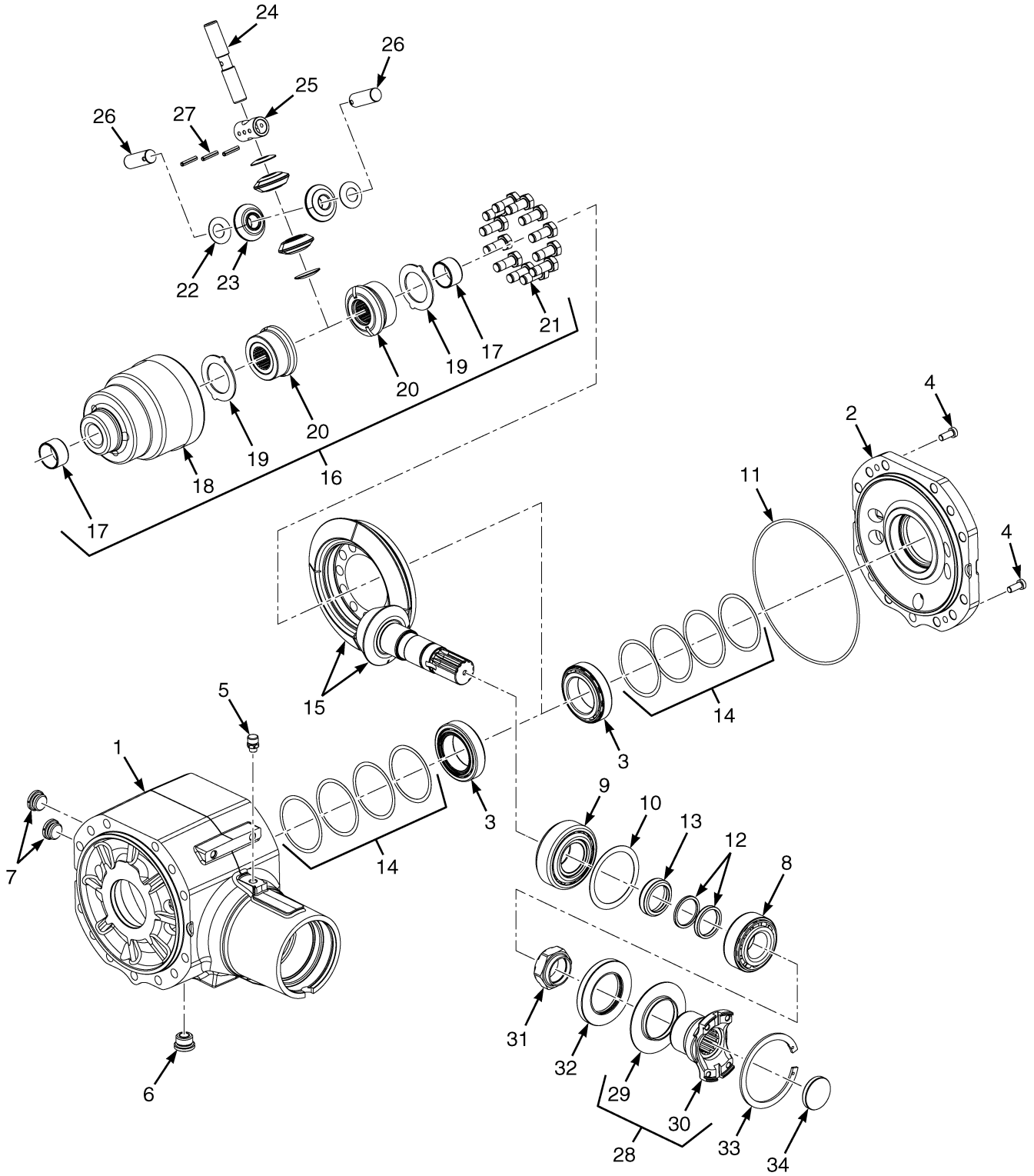

©2026 HYSTER COMPANY

DRIVE AXLE

CENTER SECTION – DRY BRAKE

ITEM	PART NO.	DESCRIPTION	QTY
	4687160	Drive Axle Center Section (H40A-H50A)	1
	4687164	Drive Axle Center Section (H55A-H70A)	1
1	4307348	Housing (Assembly)	1
1	4307349	Housing	1
2	4307350	Cover	1
3	4299268	Bearing	2
4	4299269	Screw	2
5	1623576	Plug (Ventilation)	1
6	1623545	Drain Plug	1
7	1623544	Plug	2
8	4299270	Bearing	1
9	4299271	Bearing	1
10	4299272	Kit-Shim	1
11	4279693	O-Ring	1
12	4164536	Kit-Shim	1
13	4299276	Spacer	1
14	4307351	Kit-Shim	2
15	4299299	Bevel Gear (Set) (H40A-H50A)	1
15	4307352	Bevel Gear (Set) (H55A-H70A)	1
16	4299288	Differential (Assembly)	1
17	1641362	Bushing	2
18	4299289	Differential Housing	1
19	4299298	Thrust Washer	2
20	4299297	Gear	2
21	1623578	Bolt	12
22	4299295	Thrust Washer	4
23	4299296	Gear	4
24	4299290	Spider (Differential)	1
24	4299292	Pin (Differential)	1
25	4299291	Spider	1
26	4299293	Pin (Differential Spider)	2
27	4299294	Roll Pin	3
28	4299281	Flange (Assembly)	1
29	4299283	Shield	1
30	4299282	Flange (Input)	1
31	4299285	Nut (Adjusting)	1
32	1623550	Seal	1
33	1623548	Retaining Ring	1
34	4299284	Plug	1

©2026 HYSTER COMPANY

DRIVE AXLE BRAKE PLUMBING (FIGURE 13-3)

DRY BRAKE (→ 10/2021)

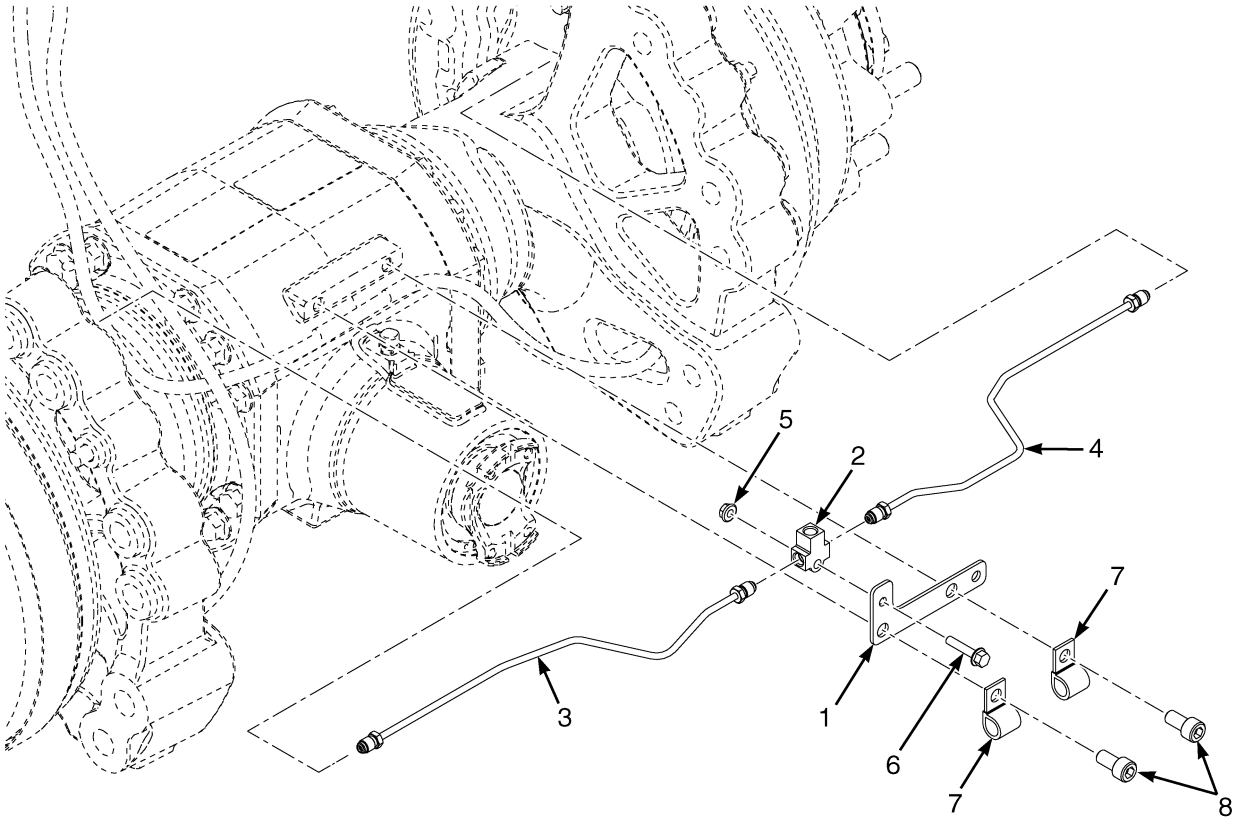

BP040320

ITEM	PART NO.	DESCRIPTION	QTY
	4269252	Drive Axle - Dry Brake	1
	4259172	Drive Axle - Dry Brake	1
	4258919	Drive Axle - Dry Brake	1
1	4261958	Bracket - Manifold	1
2	1641351	Fitting	1
3	4686060	Tube Assy - LH	1
3	81032047	Tube Assy (LH) (Alternate Part)	1
4	4686059	Tube Assy - RH	1
4	81032046	Tube Assy (RH) (Alternate Part)	1
5	~~1307884~~		
	1514429	Nut	1
6	296162	Capscrew	1
7	136516	Clamp	1
8	296024	Capscrew	2

©2026 HYSTER COMPANY

DRIVE AXLE BRAKE PLUMBING (FIGURE 13-4)

DRY BRAKE (10/2021 →)

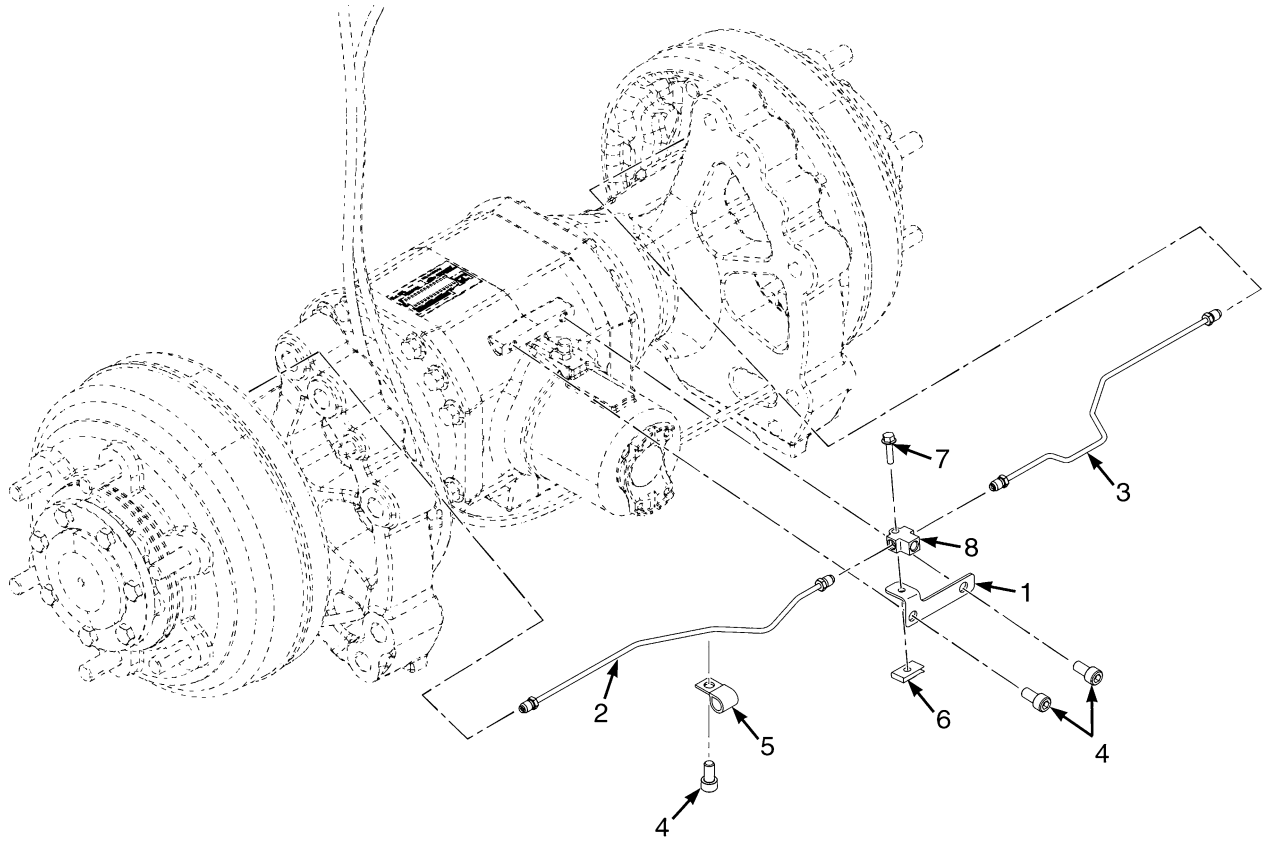

ITEM	PART NO.	DESCRIPTION	QTY
	4269252	Drive Axle - Dry Brake	1
	4259172	Drive Axle - Dry Brake	1
	4258919	Drive Axle - Dry Brake	1
1	4322830	Bracket (Manifold)	1
2	4686060	Tube Assy - LH	1
2	81032047	Tube Assy (LH) (Alternate Part)	1
3	4686059	Tube Assy - RH	1
3	81032046	Tube Assy (RH) (Alternate Part)	1
4	296024	Capscrew	3
5	136516	Clamp	1
6	4121672	Nut	1
7	1527878	Capscrew	1
8	1641351	Fitting	1

DRIVE AXLE ASSEMBLY (FIGURE 13-5)
WET BRAKE — CENTRAL HOUSING ASSEMBLY

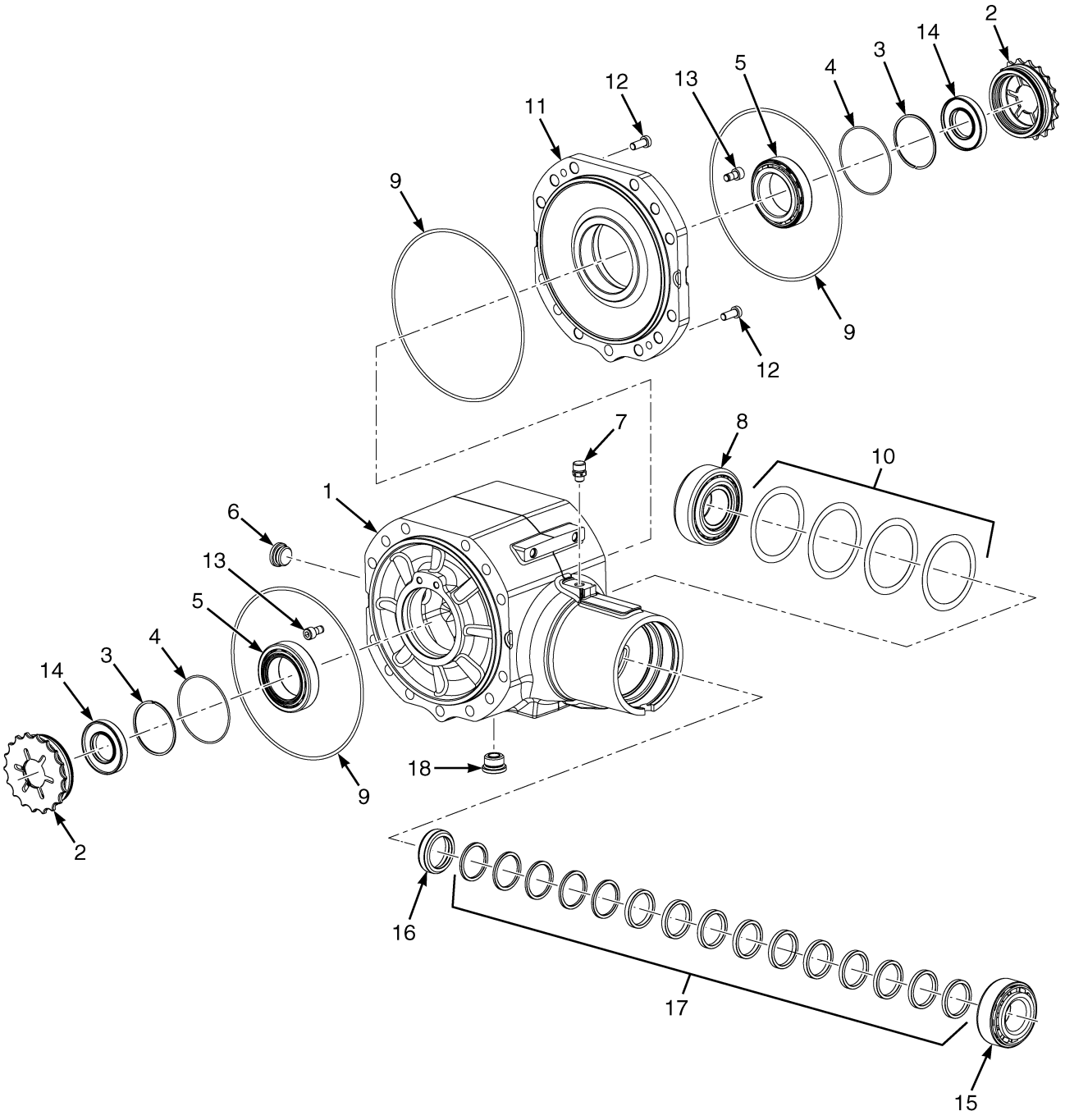

BP070269

©2026 HYSTER COMPANY

ITEM	PART NO.	DESCRIPTION	QTY
	4692030	Drive Axle - WBA, 2.0-2.5T	1
	4717032	Drive Axle - WBA, 2.0-2.5T (Alternate Part)	1
	4692029	Drive Axle - WBA, 3.0-3.5T	1
	4717033	Drive Axle - WBA, 3.0-3.5T (Alternate Part)	1
1	4299265	Housing , Assembly	1
1	4299266	Housing (Central)	1
2	1627793	Nut	2
3	1623590	Snap Ring	2
4	1623591	O-Ring	2
5	4299268	Bearing	2
6	1623544	Plug	1
7	1623576	Plug (Ventilation)	1
8	4299271	Bearing	1
9	4279693	O-Ring	3
10	4299272	Kit-Shim	1
11	4299267	Cover	1
12	4299269	Screw	2
13	1623672	Bolt	2
14	1627794	Seal	2
15	4299270	Bearing	1
16	4299276	Spacer	1
17	4164536	Kit-Shim	1
18	1623545	Drain Plug	1

©2026 HYSTER COMPANY

DRIVE AXLE ASSEMBLY (FIGURE 13-6)
WET BRAKE — LEFT AND RIGHT ARM ASSEMBLY

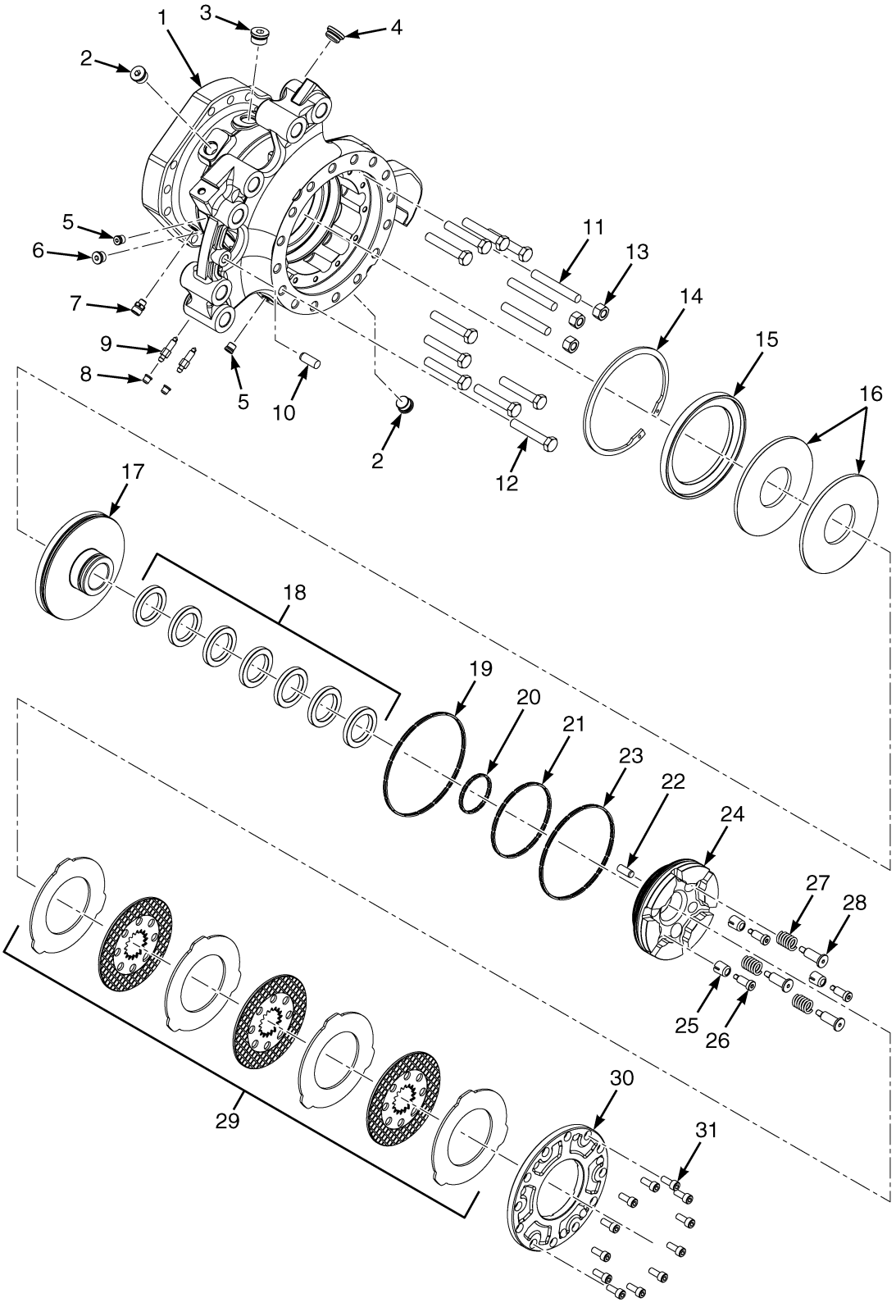

©2026 HYSTER COMPANY

DRIVE AXLE ASSEMBLY

WET BRAKE – LEFT AND RIGHT ARM ASSEMBLY

KEY:
A: H40A-H50A
B: H60A-H70A

ITEM	PART NO.	DESCRIPTION	QTY A	QTY B
	4692030	Drive Axle - WBA, 2.0-2.5T	1	..
	4717032	Drive Axle - WBA, 2.0-2.5T (Alternate Part)	1	..
	4692029	Drive Axle - WBA, 3.0-3.5T	..	1
	4717033	Drive Axle - WBA, 3.0-3.5T (Alternate Part)	..	1
	4299312	Arm , Assembly, LH	1	..
	4362958	Arm , Assembly, LH (Alternate Part)	1	..
	4299347	Arm , Assembly, RH	1	..
	4362964	Arm , Assembly, RH (Alternate Part)	1	..
	4299599	Arm , Assembly, LH	..	1
	4362965	Arm , Assembly, LH (Alternate Part)	..	1
	4299605	Arm , Assembly, RH	..	1
	4362966	Arm , Assembly, RH (Alternate Part)	..	1
1	4299313	Arm (LH)	1	1
1	4299348	Arm (RH)	1	1
2	4164546	Bolt	2	2
3	4299333	Plug	1	1
4	1623544	Plug	1	1
5	4299331	Plug	2	2
6	~~1644305~~			
	1703579	Plug	1	1
7	1623576	Plug (Ventilation)	1	1
8	1623676	Plug	2	2
9	1623677	Stud (Bleeding)	2	2
10	4299330	Pin (Dowel)	1	1
11	4299328	Stud	3	3
11	4362962	Stud (Alternate Part)	3	3
12	4299327	Screw	10	10
12	4362961	Screw (Alternate Part)	10	10
13	4299329	Nut	3	3
13	4362963	Nut (Alternate Part)	3	3
14	4299317	Snap Ring	1	1
15	4299318	Retainer	1	1
15	4362959	Retainer (Alternate Part)	1	1
16	4299320	Spring	2	2
16	4362960	Disk Spring (Alternate Part)	2	2
17	4299319	Piston (Brake)	1	1
18	4299332	Kit-Spacer	1	1
19	4299323	Seal	1	1
20	4299324	Seal	1	1
21	4299325	Seal	1	1
22	4299314	Pin (Dowel)	1	1
23	4299326	Seal	1	1
24	4299321	Piston (Brake)	1	..
24	4299600	Piston (Brake)	..	1
25	1623690	Spring	3	3

©2026 HYSTER COMPANY

DRIVE AXLE ASSEMBLY

WET BRAKE – LEFT AND RIGHT ARM ASSEMBLY

KEY:
A: H40A-H50A
B: H60A-H70A

ITEM	PART NO.	DESCRIPTION	QTY A	QTY B
26	1657779	Bolt (Adjusting)	3	..
26	4299601	Screw	..	3
27	1627825	Spring	3	3
28	1627826	Bolt (Adjusting) (LH)	3	3
28	1627827	Pivot (Cast) (RH)	3	..
28	1627826	Bolt (Adjusting) (RH)	..	3
29	4299322	Friction Disk (Set)	1	..
29	4299602	Friction Disk (Set)	..	1
30	4299315	Cover (Brake)	1	1
31	4299316	Screw	12	12

©2026 HYSTER COMPANY

NOTES

DRIVE AXLE ASSEMBLY (FIGURE 13-7)
WET BRAKE — SHAFT ASSEMBLY

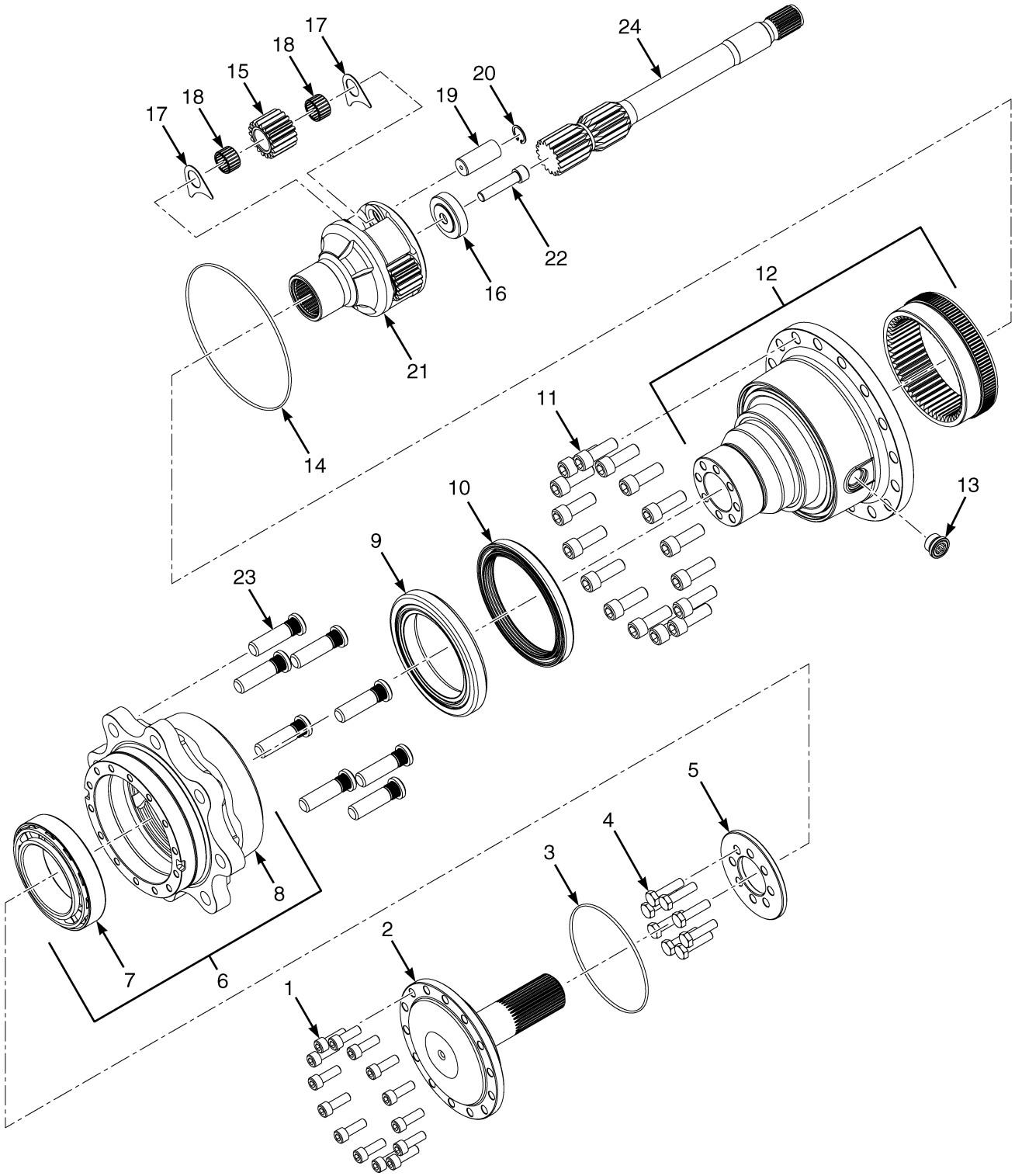

©2026 HYSTER COMPANY

DRIVE AXLE ASSEMBLY
WET BRAKE – SHAFT ASSEMBLY

ITEM	PART NO.	DESCRIPTION	QTY
	4692030	Drive Axle - WBA, 2.0-2.5T (H40A-H50A)	1
	4717032	Drive Axle - WBA, 2.0-2.5T (H40A-H50A) (Alternate Part)	1
	4692029	Drive Axle - WBA, 3.0-3.5T (H60A-H70A)	1
	4717033	Drive Axle - WBA, 3.0-3.5T (H60A-H70A) (Alternate Part)	1
	4299355	Drive Module - Final Drive Module	1
1	4299364	Screw	14
2	4299363	Axle Shaft	1
3	4299378	Seal	1
4	4299362	Screw	8
5	4299361	Washer - Ring Gear Carrier	1
6	4299357	Wheel Hub (Assembly)	1
7	4299359	Bearing	1
8	4299358	Wheel Hub	1
9	4299360	Bearing	1
10	4299377	Seal	1
11	4299365	Screw	16
12	4299356	Ring Gear (Assembly)	1
13	1623545	Drain Plug	1
14	4299376	Seal	1
15	4299366	Reducer (Assembly)	1
15	4299367	Gear (Assembly)	1
15	4299368	Carrier (Planet)	1
16	4299369	Spacer	1
17	4299370	Rail , Shoulder	6
18	4299372	Needle Bearing	6
19	4299371	Spindle (Planetary Gear)	3
20	4299373	Snap Ring	3
21	4299374	Gear (Planet)	3
22	4299375	Screw	1
23	4299379	Wheel Stud	8
24	4299380	Axle Shaft	1

DRIVE AXLE ASSEMBLY (FIGURE 13-8)
WET BRAKE — INPUT FLANGE

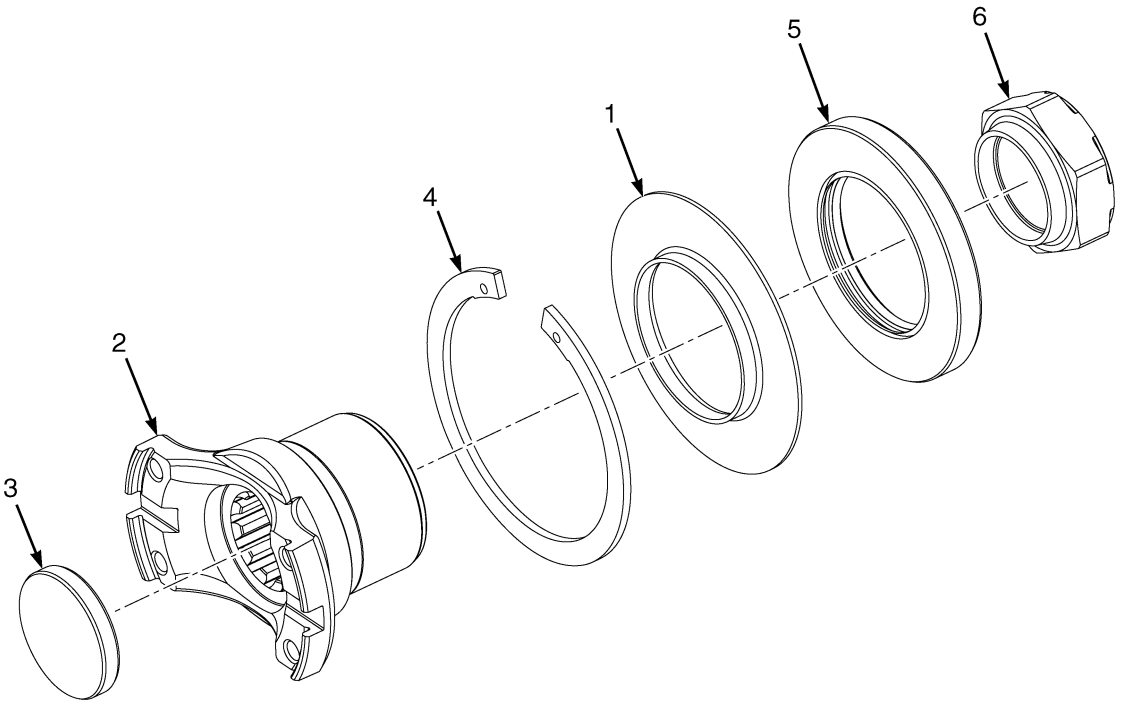

BP070273

ITEM	PART NO.	DESCRIPTION	QTY
	4692030	Drive Axle - WBA, 2.0-2.5T (H40A-H50A)	1
	4717032	Drive Axle - WBA, 2.0-2.5T (H40A-H50A) (Alternate Part)	1
	4692029	Drive Axle - WBA, 3.0-3.5T (H60A-H70A)	1
	4717032	Drive Axle - WBA, 2.0-2.5T (H60A-H70A) (Alternate Part)	1
	4299280	Flange , Input, Assembly	1
1	4299281	Flange (Assembly)	1
1	4299283	Shield	1
2	4299282	Flange (Input)	1
3	4299284	Plug	1
4	1623548	Retaining Ring	1
5	1623550	Seal	1
6	4299285	Nut (Adjusting)	1

See Service Manual for service procedures.
©2026 HYSTER COMPANY

DRIVE AXLE ASSEMBLY (FIGURE 13-9)
WET BRAKE — DIFFERENTIAL ASSEMBLY

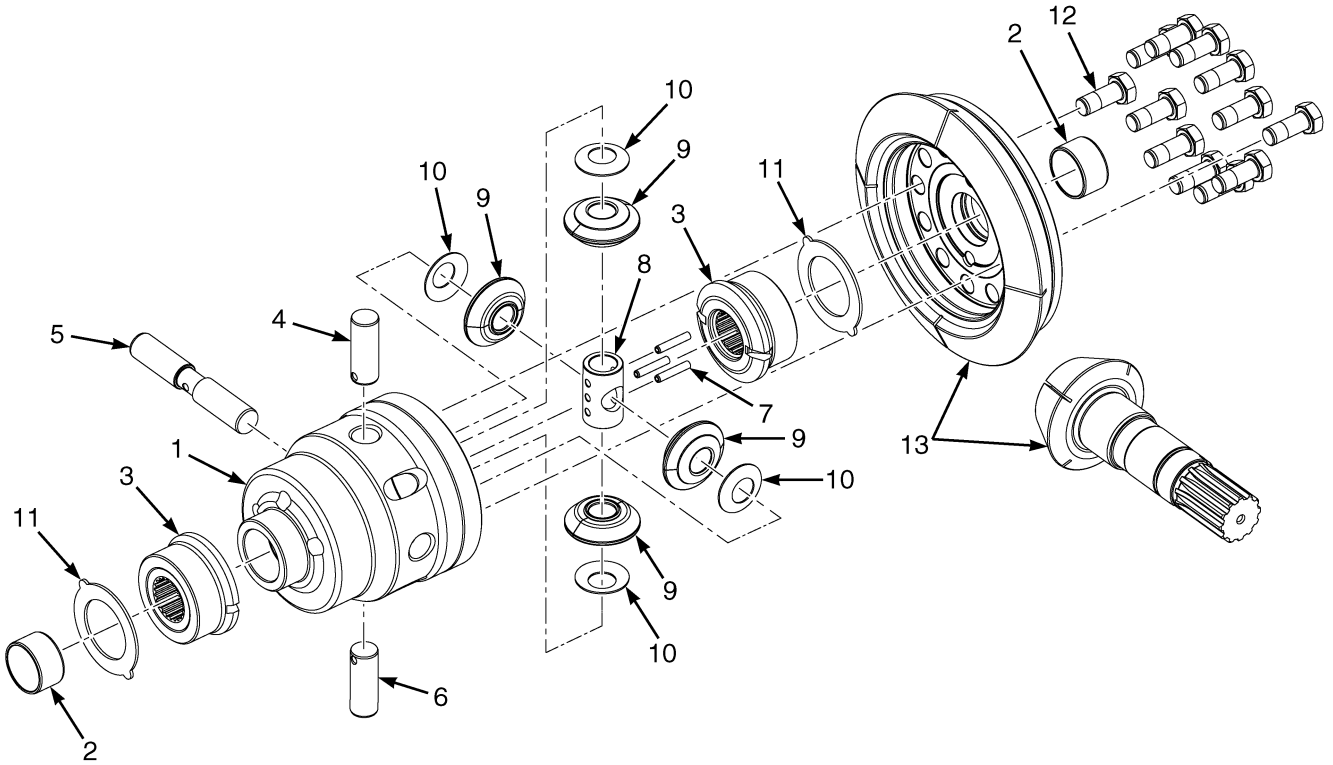

BP070272

ITEM	PART NO.	DESCRIPTION	QTY
	4692030	Drive Axle - WBA, 2.0-2.5T (H40A-H50A)	1
	4717032	Drive Axle - WBA, 2.0-2.5T (H40A-H50A) (Alternate Part)	1
	4692029	Drive Axle - WBA, 3.0-3.5T (H60A-H70A)	1
	4717033	Drive Axle - WBA, 3.0-3.5T (H60A-H70A) (Alternate Part)	1
	4299288	Differential (Assembly)	1
1	4299289	Differential Housing	1
2	1641362	Bushing	2
3	4299297	Gear	2
4	4299290	Spider (Differential)	1
5	4299292	Pin (Differential)	1
6	4299293	Pin (Differential Spider)	1
7	4299294	Roll Pin	1
8	4299291	Spider	1
9	4299296	Gear	4
10	4299295	Thrust Washer	4
11	4299298	Thrust Washer	2
12	1623578	Bolt	12
13	4299299	Bevel Gear (Set)	1

DUAL WHEEL ADAPTER (FIGURE 13-10)

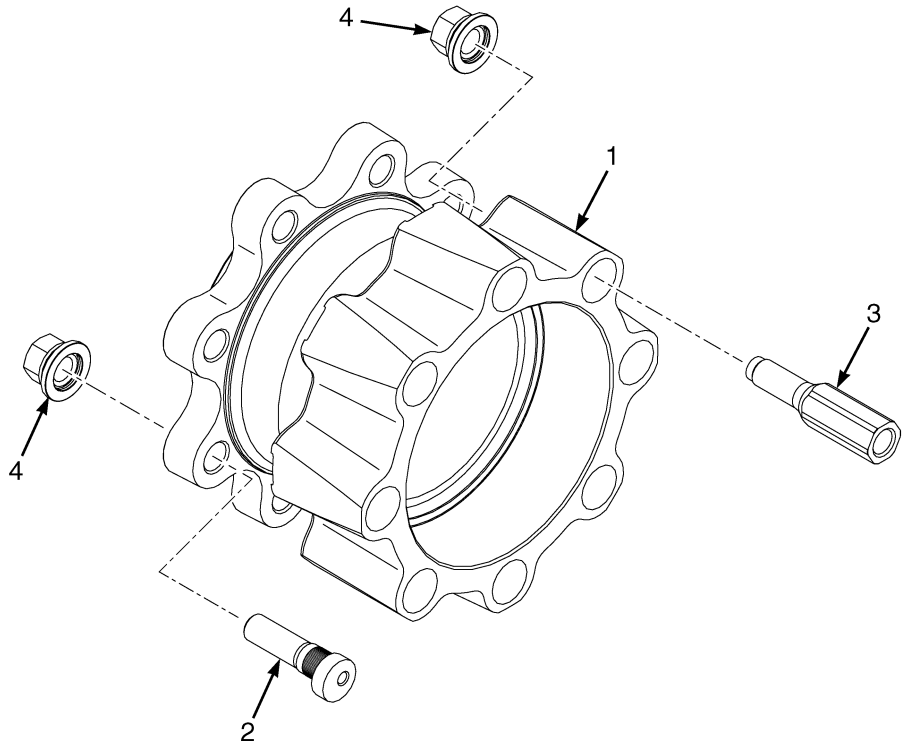

ITEM	PART NO.	DESCRIPTION	QTY
1	4273789	Wheel Hub	2
2	4267476	Bolt	8
3	4198401	Stud , Wheel	16
4	1530721	Wheel Nut	32

©2026 HYSTER COMPANY

DRIVE WHEEL AND TIRE (FIGURE 13-11)

STANDARD — H40A-H50A

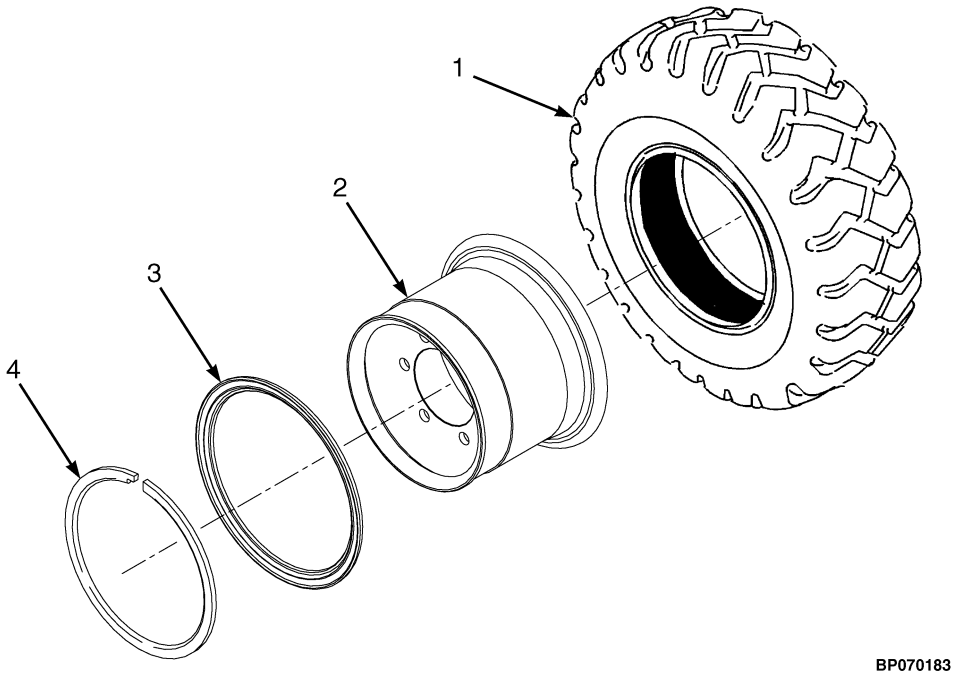

KEY:
A: Solid (Wet Brake)
B: Solid (Dry Brake)
C: Bias-ply
D: Radial
E: Dry Brake MFG Opt

ITEM	PART NO.	DESCRIPTION	QTY A	QTY B	QTY C	QTY D	QTY E
	4239250	Wheel And Tire (CB/WH) - Standard (7.0-12)	2	..	..	..	..
	4248848	Wheel And Tire (CB/WH) - Non-Marking (7.0-12)	2	..	..	..	..
	4248847	Wheel And Tire (CB/WH) - Premium (7.0-12)	2	..	..	..	..
	4239247	Wheel And Tire (CB/WH) - Standard (7.0-12)	..	2	..	..	..
	4268944	Wheel And Tire (CB/WH) - Non-Marking (7.0-12)	..	2	..	..	..
	4268943	Wheel And Tire (CB/WH) - Premium (7.0-12)	..	2	..	..	..
	4268945	Wheel And Tire (CB/WH) - Standard (7.0-12, Bias-ply) (Dry Brake)	..	..	2	..	..
	4249166	Wheel And Tire (CB/WH) - Standard (7.0-12, Bias-ply) (Wet Brake)	..	..	2	..	..
	4268380	Wheel And Tire (CB/WH) - Standard (7.0-12)	..	..	..	2	..
	4268946	Wheel And Tire (CB/WH) - Standard (7.0-12)	..	..	..	2	..
	4206482	Wheel And Tire (CB/WH) (7.00-12)	..	..	..	..	2
	4268941	Wheel And Tire (CB/WH) - Premium (7.0-12) (Premium)	..	2	..	..	..
1	4268878	Solid Pneumatic Tire - Standard (7.00-12)	1	..	..	..	..
1	4247503	Solid Pneumatic Tire - Non-Marking (7.00-12)	1	..	..	..	..
1	4247502	Solid Pneumatic Tire - Premium (7.00-12)	1	..	..	..	..
1	4268877	Solid Pneumatic Tire - Standard (7.0-12)	..	1	..	..	..

KEY:
A: Solid (Wet Brake)
B: Solid (Dry Brake)
C: Bias-ply
D: Radial
E: Dry Brake MFG Opt

			QTY				
ITEM	**PART NO.**	**DESCRIPTION**	**A**	**B**	**C**	**D**	**E**
1	4247503	Solid Pneumatic Tire - Non-Marking (7.00-12)	..	1	..	..	..
1	4247502	Solid Pneumatic Tire - Premium (7.00-12)	..	1	..	..	..
1	1543060	Tire (7.00-12)	..	..	1	..	..
1	1471829	Pneumatic Tire	..	..	..	1	..
1	1471591	Tubeless Bead Seal	..	..	..	1	..
1	1358179	Pneumatic Tire (7.00-12)	..	..	..	1	..
1	4206474	Solid Pneumatic Tire (7.00-12)	..	..	..	..	1
1	4248010	Solid Pneumatic Tire - Premium (7.0-12) (Premium)	..	1	..	..	..
2	4236954	Wheel Assy (Wet Brake)	1	..	1	1	..
2	4236953	Wheel Assy	..	1	..	..	..
2	2070073	Wheel Assy (5.00 x 12) (Dry Brake)	..	1	1	1	..
2	4206478	Wheel Assy	..	..	..	..	1
2	**a** 2070080	Rim (Premium)	..	1	..	..	..
3	161889	Wheel Lock Ring	1	1	1	1	..
4	161890	Wheel Side Ring	1	1	1	1	..

FOOTNOTES:

a Contains no serviceable down parts.

©2026 HYSTER COMPANY

DRIVE WHEEL AND TIRE (FIGURE 13-12)

STANDARD — H55A-H70A

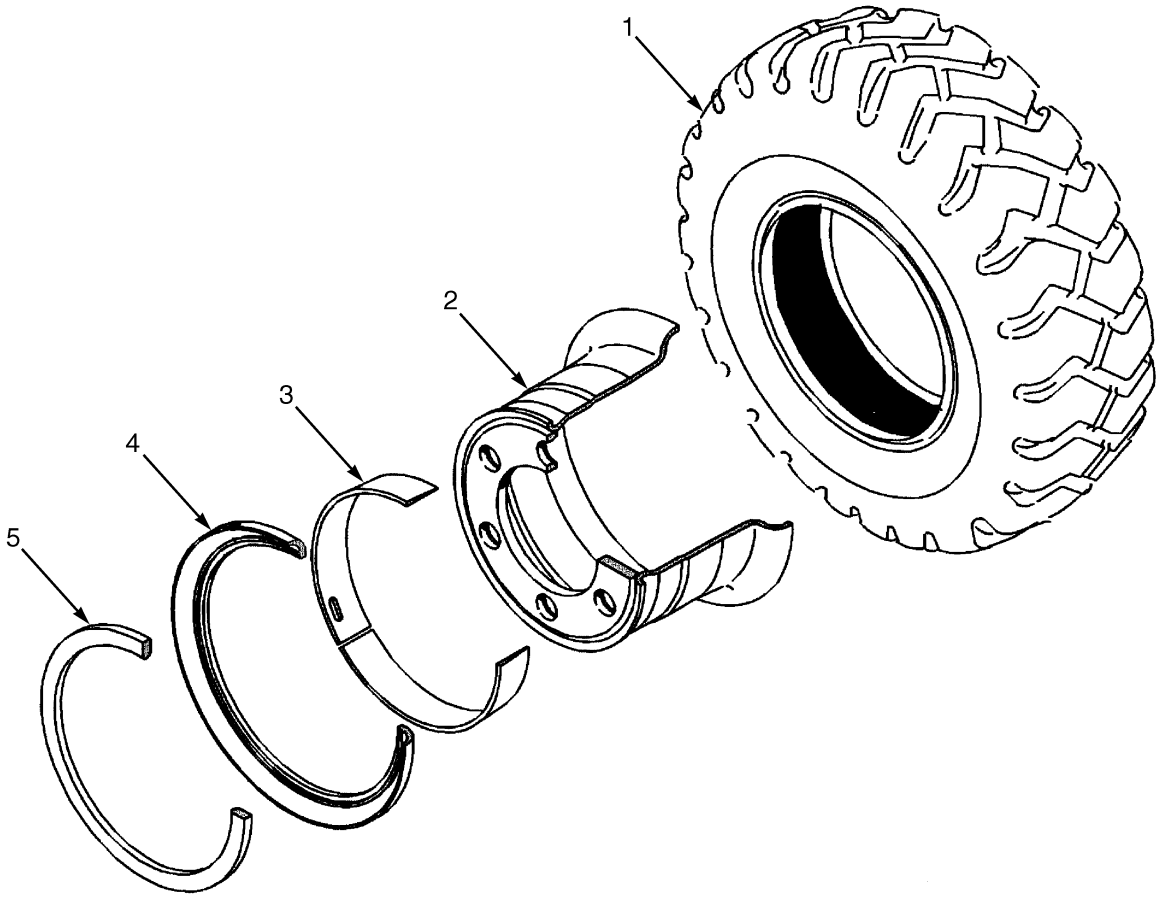

BP070013

KEY:
A: Solid
B: Bias-ply
C: Radial
D: Solid Loc

ITEM	PART NO.	DESCRIPTION	QTY A	QTY B	QTY C	QTY D
	4239257	Wheel And Tire (CB/WH) - Standard (28x9-15)	2	..	..	..
	4248850	Wheel And Tire (CB/WH) - Non-Marking (28x9-15)	2	..	..	..
	4248849	Wheel And Tire (CB/WH) - Premium (28x9-15)	2	..	..	..
	4249167	Wheel And Tire (CB/WH) - Standard (28x9-15 Bias-ply)	..	2	..	..
	4268381	Wheel And Tire (CB/WH) - Standard (28x9-15 Radial)	..	..	2	..
	4239255	Wheel And Tire (CB/WH) - Standard (28x9-15)	..	..	..	2
1	4268880	Solid Pneumatic Tire - Standard (28x9-15)	1	..	..	..
1	4247507	Solid Pneumatic Tire - Non-Marking (28x9-15)	1	..	..	..
1	4247506	Solid Pneumatic Tire - Premium (28x9-15)	1	..	..	..
1	1543061	Tire (28 x 9-15)	..	1	..	..
1	1471835	Pneumatic Tire	..	..	1	..
1	1462617	Tubeless Bead Seal	..	..	1	..
1	1358183	Pneumatic Tire (Michelin XZM)	..	..	1	..
1	4236955	Wheel Assy	..	..	..	1

KEY:
A: Solid
B: Bias-ply
C: Radial
D: Solid Loc

ITEM	PART NO.	DESCRIPTION	QTY A	QTY B	QTY C	QTY D
2	4236956	Wheel Assy	1	1	1	..
2	4268879	Solid Pneumatic Tire (28x9-15)	..	..	..	1
3	321124	Wheel Side Ring	1	1	1	..
4	1618589	Wheel Lock Ring	1	1	1	..
5	1618586	Ring-Tapered Bead Seat	1	1	1	..

©2026 HYSTER COMPANY

NOTES

DRIVE WHEEL AND TIRE ASSEMBLY (FIGURE 13-13)

SOLID — DUAL

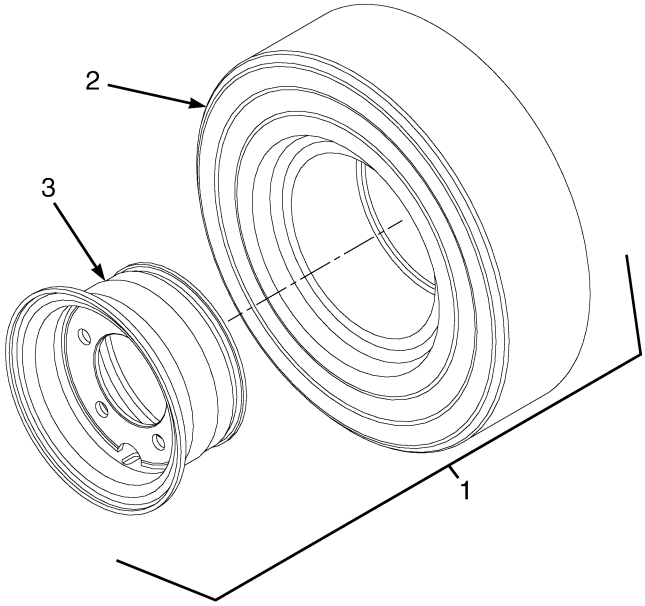

BP220221

©2026 HYSTER COMPANY

DRIVE WHEEL AND TIRE ASSEMBLY
SOLID – DUAL

KEY:
A: H40A-H50A
B: H55A-H70A

ITEM	PART NO.	DESCRIPTION	QTY A	QTY B
1	4273918	Wheel And Tire (CB/WH) - Premium (5.50-15)	4	..
1	4273919	Wheel And Tire (CB/WH) - Non-Marking (5.50-15)	4	..
1	4273922	Wheel And Tire (CB/WH) - Premium (6.00-15)	..	4
1	4273923	Wheel And Tire (CB/WH) - Non-Marking (6.00-15)	..	4
2	4272586	Solid Pneumatic Tire - Premium (5.50-15)	1	..
2	4272587	Solid Pneumatic Tire - Non-Marking (5.50-15)	1	..
2	4272590	Solid Pneumatic Tire - Premium (6.00-15)	..	1
2	4272591	Solid Pneumatic Tire - Non-Marking (6.00-15)	..	1
3	4273915	Wheel Assy	1	1
3	4206331	Wheel Assy (Alternate Part)	1	1

DRIVE WHEEL AND TIRE ASSEMBLY (FIGURE 13-14)

SOLID — WIDE

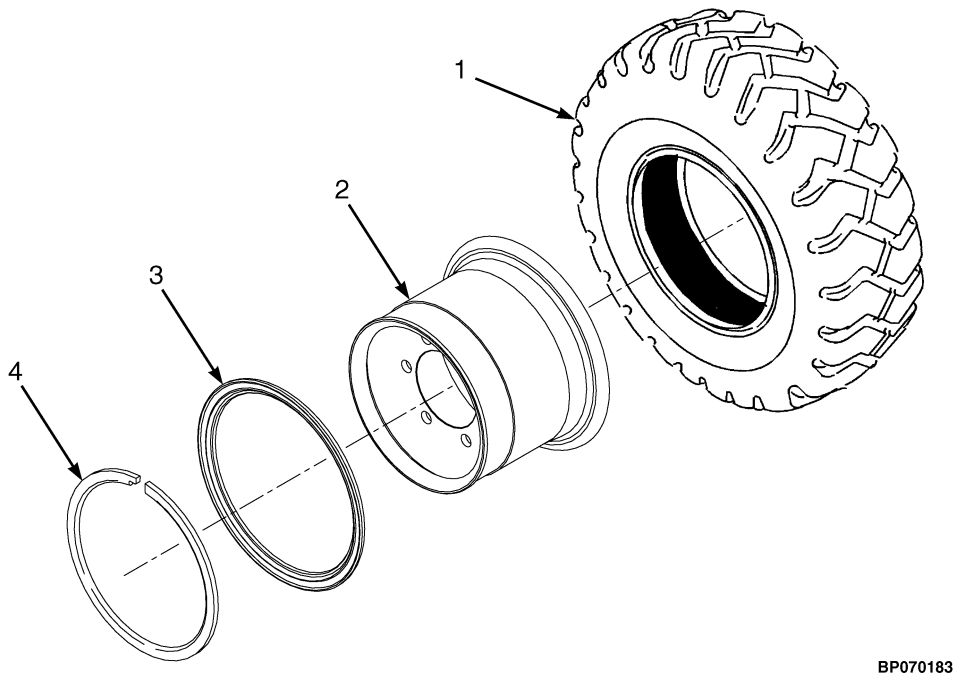

KEY:
A: H40A-H50A Dry Brake
B: H40A-H50A Wet Brake
C: H55A-H70A Wet Brake

ITEM	PART NO.	DESCRIPTION	QTY A	QTY B	QTY C
	4239254	Wheel And Tire (CB/WH) - Standard (7.00-12)	2	..	..
	4268949	Wheel And Tire (CB/WH) - Premium (7.00-12)	2	..	..
	4268950	Wheel And Tire (CB/WH) - Non-Marking (7.00-12)	2	..	..
	4267796	Wheel And Tire (CB/WH) - Premium (28x9-15)	2	..	..
	4239294	Wheel And Tire (CB/WH) - Standard (7.00-12)	..	2	..
	4239677	Wheel And Tire (CB/WH) - Premium (7.00-12)	..	2	..
	4239678	Wheel And Tire (CB/WH) - Non-Marking (7.00-12)	..	2	..
	4239296	Wheel And Tire (CB/WH) - Standard (28x9-15)	..	..	2
	4239681	Wheel And Tire (CB/WH) - Premium (28x9-15)	..	..	2
	4239682	Wheel And Tire (CB/WH) - Non-Marking (28x9-15)	..	..	2
1	4268878	Solid Pneumatic Tire - Standard (7.00-12)	1	1	..
1	4247502	Solid Pneumatic Tire - Premium (7.00-12)	1	1	..
1	4247503	Solid Pneumatic Tire - Non-Marking (7.00-12)	1	1	..
1	4247506	Solid Pneumatic Tire - Premium (28x9-15)	1	..	1
1	4268880	Solid Pneumatic Tire - Standard (28x9-15)	..	..	1
1	4247507	Solid Pneumatic Tire - Non-Marking (28x9-15)	..	..	1
2	4206307	Wheel Assy	..	..	1
2	4206301	Wheel Assy	..	1	..
2	4268954	Wheel Assy (7.00-12)	1	..	..
2	2070076	Wheel Assy (7.00 x 15) (28x9-15)	1	..	..

©2026 HYSTER COMPANY

KEY:
A: H40A-H50A Dry Brake
B: H40A-H50A Wet Brake
C: H55A-H70A Wet Brake

ITEM	PART NO.	DESCRIPTION	QTY A	QTY B	QTY C
2	2070077	Rim (28x9-15)	1	..	..
2	1584695	Wedge Band (28x9-15)	1	..	..
3	160653	Wheel Side Ring (28x9-15)	1	..	..
4	980542	Wheel Lock Ring (28x9-15)	1	..	..

DRIVE WHEEL AND TIRE (FIGURE 13-15)
MANUFACTURING OPTION

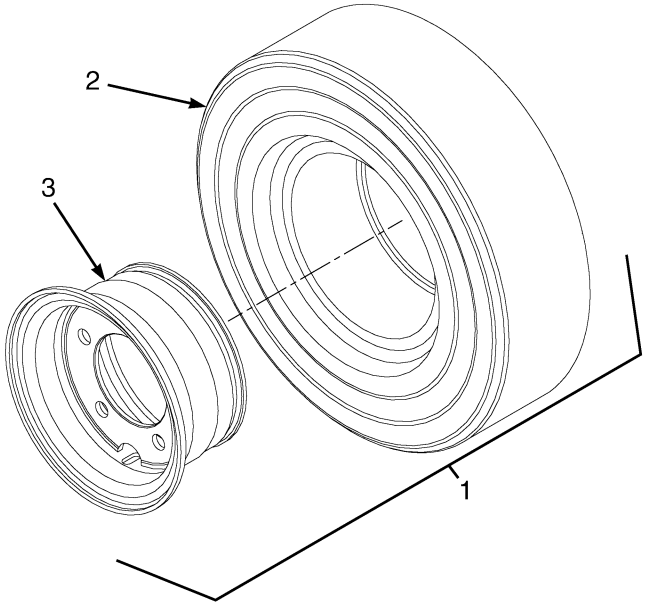

BP220221

©2026 HYSTER COMPANY

DRIVE WHEEL AND TIRE

MANUFACTURING OPTION

ITEM	PART NO.	DESCRIPTION	QTY
1	4206483	Wheel And Tire (CB/WH) (Assembly)	2
1	4206482	Wheel And Tire (CB/WH) (7.00-12)	2
2	4206475	Solid Pneumatic Tire	1
2	4206474	Solid Pneumatic Tire (7.00-12)	1
3	4206479	Wheel Assy	1
3	4206478	Wheel Assy	1

©2026 HYSTER COMPANY

FENDERS (FIGURE 13-16)
WITH ANTI-STATIC STRAP

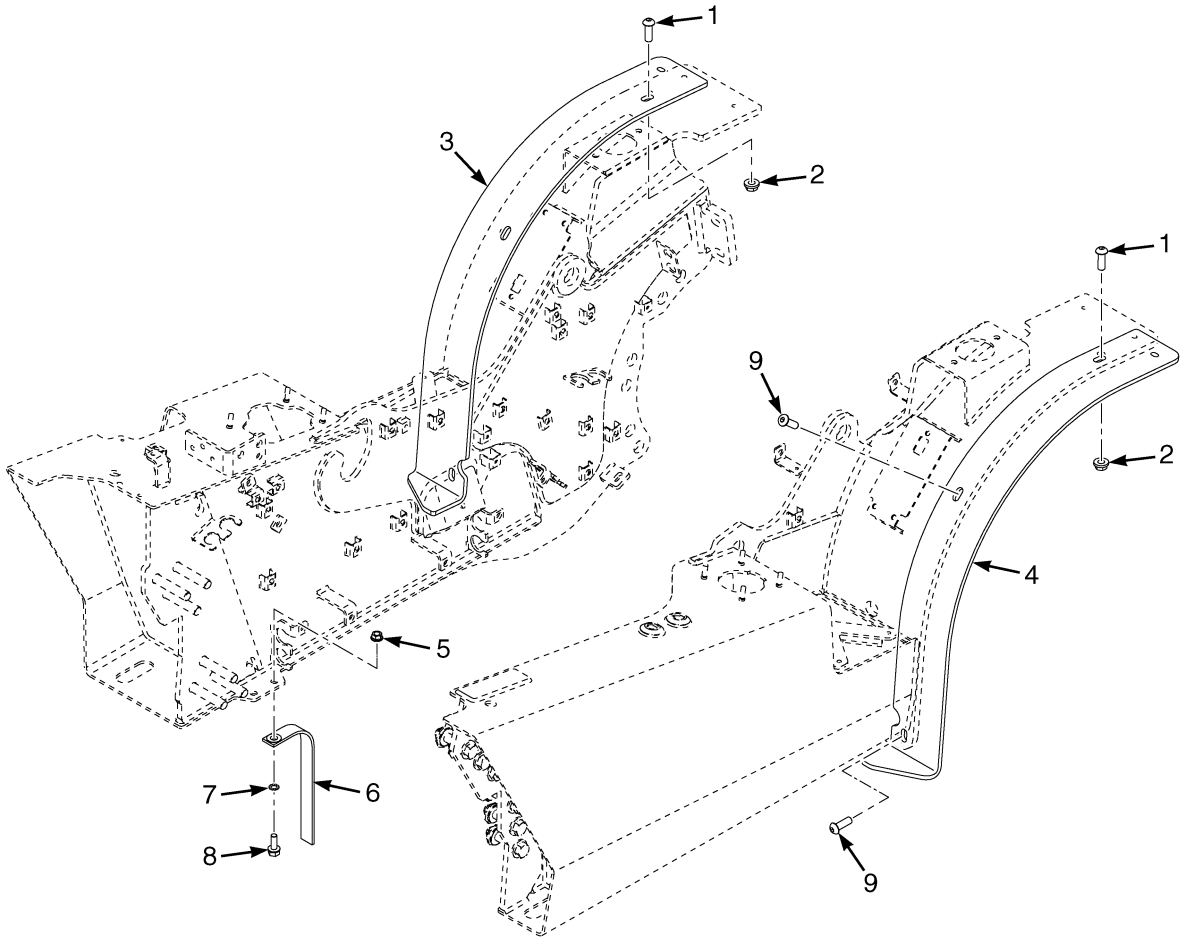

BP260160

ITEM	PART NO.	DESCRIPTION	QTY
1	4044989	Capscrew (Long)	2
1	4044987	Capscrew (Short)	2
2	1586432	Nut	6
3	4270505	Fender - LH, Wide Tire	1
3	4270506	Fender - LH, Dual Tire (61in)	1
3	4270723	Fender - LH, Wide Tire	1
4	4270508	Fender - RH, Wide Tire	1
4	4270509	Fender - RH, Dual Tire (61in)	1
4	4270724	Fender - RH, Wide Tire	1
5	1460477	Nut	1
6	216895	Static Strap	1
6	~~2799498~~		
	240065	Static Strap	1
7	296381	Washer	1
8	1605990	Capscrew	1
9	4044987	Capscrew	4

©2026 HYSTER COMPANY

14 STEERING SYSTEM

SECTION 14
STEERING SYSTEM

DESCRIPTION **PAGE**

SENSOR
SYNCHRONOUS STEERING 14-22
STEER AXLE
NON SYNCHRONOUS 14-2
SYNCHRONOUS 14-6
STEER COLUMN AND ATTACHING PARTS
TILT AND TELESCOPE 14-14
TILT ONLY 14-10
STEER COLUMN ASSEMBLY
TILT AND TELESCOPE 14-20
TILT ONLY 14-18
STEER CYLINDER ASSEMBLY 14-9
STEER WHEEL AND TIRE ASSEMBLY 14-23
MANUFACTURING OPTION 14-26

©2026 HYSTER COMPANY

STEER AXLE (FIGURE 14-1)
NON SYNCHRONOUS

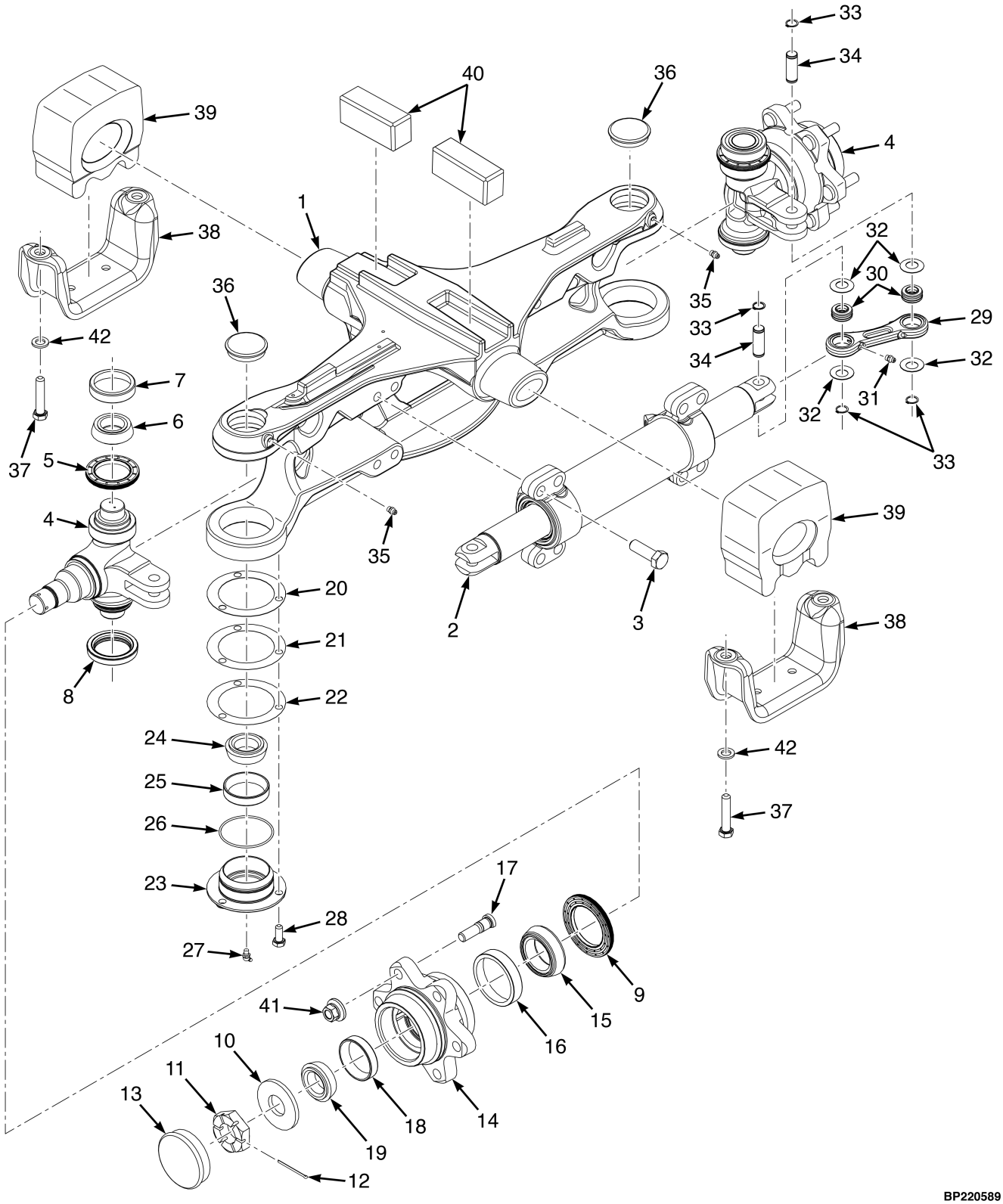

©2026 HYSTER COMPANY

ITEM	PART NO.	DESCRIPTION	QTY
	4263620	Steering Axle (Assembly) (H40A-H50A)	1
	4364768	Steering Axle (Non-Synchronous) (H40A-H50A) (Alternate Part)	1
	4252360	Steering Axle (Assembly) (H55A-H70A)	1
1	4263621	Steering Axle (H40A-H50A)	1
1	4360479	Steering Axle (H40A-H50A) (Alternate Part)	1
1	4236440	Steering Axle (H55A-H70A)	1
2	4690837	Steering Cylinder (H40A-H50A) (☞Figure 14-3)	1
2	4690838	Steering Cylinder (H55A-H70A) (☞Figure 14-3)	1
3	293686	Capscrew	8
4	. . . . .	Spindle Assemblies (LH and RH)	2
4	4176836	Spindle - LH	1
4	4176914	Spindle - RH	1
5	4255012	Seal	1
6	135658	Bearing Cup	1
7	135657	Bearing Cone	1
8	266733	Seal	1
9	4255011	Seal	1
10	1383775	Washer	1
11	1383777	Nut	1
12	15227	Cotter Pin	1
13	69029	Cap	1
14	4213440	Wheel Hub	1
14	4177262	Hub	1
15	183615	Bearing Cone	1
16	183614	Bearing Cup	1
17	1502276	Wheel Stud	6
18	135658	Bearing Cup	1
19	135657	Bearing Cone	1
19	4288879	Bearing Set (Cone and Cup) (Optional)	1
20	4253224	Shim (.508mm)	2
21	4253222	Shim (.127mm)	2
22	4253223	Shim (.178mm)	2
23	4177249	Bearing Cap (Assembly)	2
23	4175713	Bearing Cap	1
24	135657	Bearing Cone	1
25	135658	Bearing Cup	1
26	39678	O-Ring	1
27	13963	Grease Fitting	1
28	293628	Capscrew	6
29	4177280	Tie Rod , Assembly	2
29	4177279	Tie Rod	1
30	300751	Bushing	2
31	13957	Grease Fitting	2
32	300752	Spherical Washer	8
33	58903	Snap Ring	8
34	1568271	Pin	4
35	13957	Grease Fitting	2
36	185860	Plug	2
37	**a** 1583945	Capscrew	4
37	**b** 1597381	Capscrew	4
38	~~4269608~~		
	4368808	Bracket (Steer Axle Mount)	2
38	81014317	Bracket (Alternate Part)	2

ITEM	PART NO.	DESCRIPTION	QTY
39	1525354	Rubber Mount	2
40	1388838	Rubber Mount	2
41	1517836	Wheel Nut	12
42	**b** 296422	Washer	4

FOOTNOTES:

a → 7/2024

b 7/2024 →

©2026 HYSTER COMPANY

NOTES

STEER AXLE (FIGURE 14-2)
SYNCHRONOUS

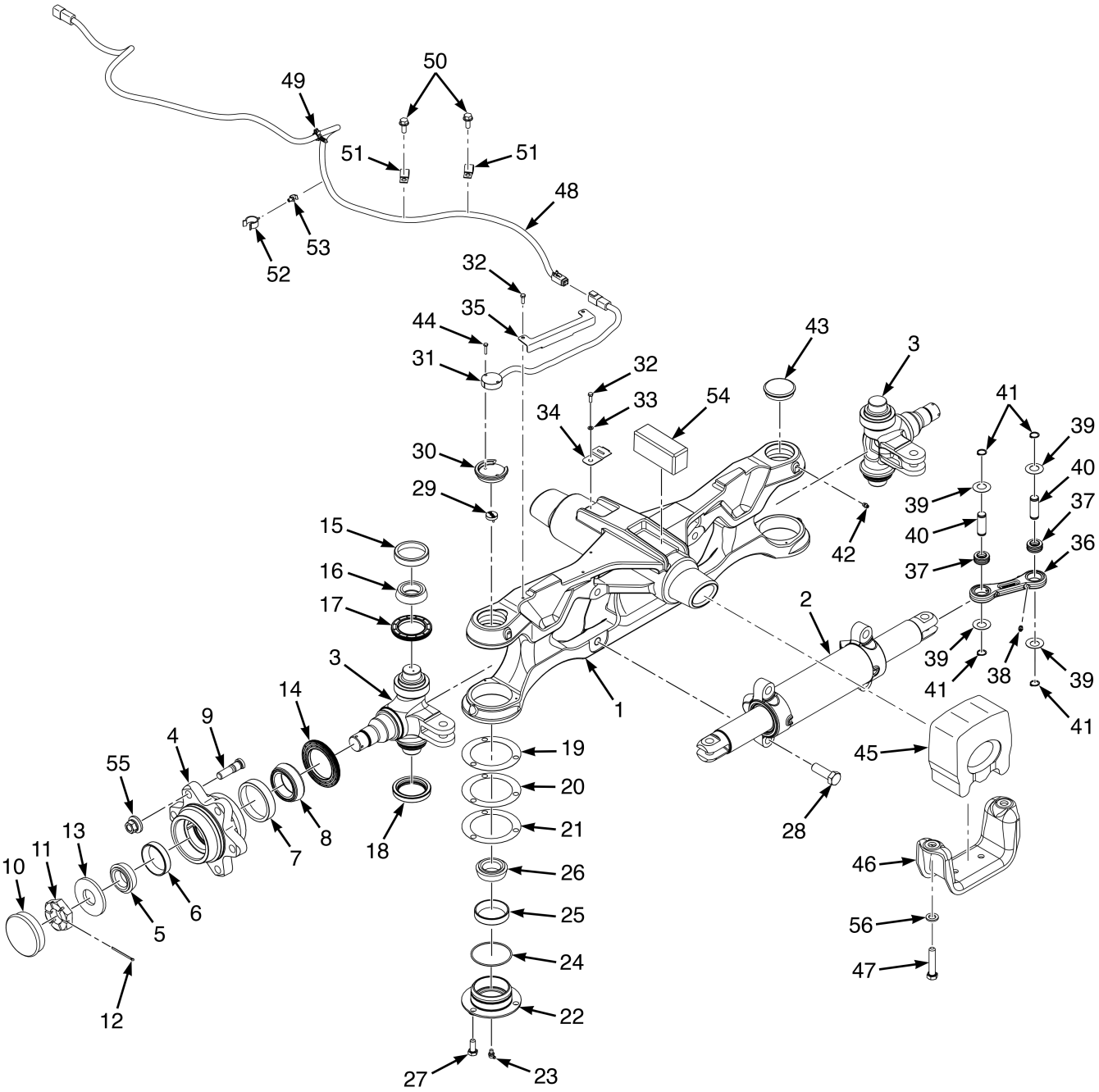

BP220523

©2026 HYSTER COMPANY

STEER AXLE
SYNCHRONOUS

KEY:
A: Synchronous (H55A-H70A)
B: Standard Synchronous (H40A-H50A)

ITEM	PART NO.	DESCRIPTION	QTY A	QTY B
	4177257	Steering Axle	1	..
	4271381	Steering Axle	..	1
	4364769	Steering Axle (Alternate Part)	..	1
1	4236440	Steering Axle	1	..
1	4263621	Steering Axle	..	1
1	4360479	Steering Axle (Alternate Part)	..	1
2	4690838	Steering Cylinder (☞Figure 14-3)	1	..
2	4690837	Steering Cylinder (☞Figure 14-3)	..	1
3	4176836	Spindle - LH	1	1
3	4176914	Spindle - RH	1	1
4	4213440	Wheel Hub	2	2
4	4177262	Hub	1	1
5	135657	Bearing Cone	1	1
6	135658	Bearing Cup	1	1
6	4288879	Bearing Set (Cone and Cup) (Optional)	1	1
7	183614	Bearing Cup	1	1
8	183615	Bearing Cone	1	1
9	1502276	Wheel Stud	6	6
10	69029	Cap	2	2
11	1383777	Nut	2	2
12	15227	Cotter Pin	2	2
13	1383775	Washer	2	2
14	4255011	Seal	2	2
15	135658	Bearing Cup	2	2
16	135657	Bearing Cone	2	2
17	4255012	Seal	2	2
18	266733	Seal	2	2
19	4253224	Shim (.508mm)	2	2
20	4253223	Shim (.178mm)	2	2
21	4253222	Shim (.127mm)	2	2
22	4177249	Bearing Cap (Assembly)	2	2
22	4175713	Bearing Cap	1	1
23	13963	Grease Fitting	1	1
24	39678	O-Ring	1	1
25	135658	Bearing Cup	1	1
26	135657	Bearing Cone	1	1
27	293628	Capscrew	6	6
28	293686	Capscrew	8	4
29	4276835	Magnet (w/ screws)	1	1
30	4174036	Cap	1	1
31	4277099	Wire Harness - Steering Sensor, Contactless	1	1
32	2044515	Capscrew	5	5
33	320155	Washer	2	2
34	4031956	Clip	1	1
35	4271527	Bracket	..	1

STEER AXLE
SYNCHRONOUS

KEY:
A: Synchronous (H55A-H70A)
B: Standard Synchronous (H40A-H50A)

ITEM	PART NO.	DESCRIPTION	QTY A	QTY B
35	1486566	Clamp	2	..
36	4177280	Tie Rod , Assembly	2	2
36	4177279	Tie Rod	1	1
36	135657	Bearing Cone	1	1
37	300751	Bushing	2	2
38	13957	Grease Fitting	2	2
39	300752	Spherical Washer	8	8
40	1568271	Pin	4	4
41	58903	Snap Ring	8	8
42	13957	Grease Fitting	2	2
43	185860	Plug	2	2
44	4628560	Capscrew	2	2
45	1525354	Rubber Mount	2	2
46	~~4269608~~			
	4368808	Bracket (Steer Axle Mount)	2	2
46	81014317	Bracket (Alternate Part)	2	2
47	**a** 1583945	Capscrew	4	4
47	**b** 1597381	Capscrew	4	4
48	4686312	Wire Harness - Steer Axle Jumper	1	1
49	1509888	Clip (Conduit)	1	1
50	1527880	Capscrew	2	2
51	132131	Clamp	2	2
52	1582605	Clamp	1	1
53	4160428	Clamp (Swivel Tie)	1	1
54	1388838	Rubber Mount	2	2
55	1517836	Wheel Nut	12	12
56	**b** 296422	Washer	4	4

FOOTNOTES:

a → 7/2024

b 7/2024 →

©2026 HYSTER COMPANY

STEER CYLINDER ASSEMBLY (FIGURE 14-3)

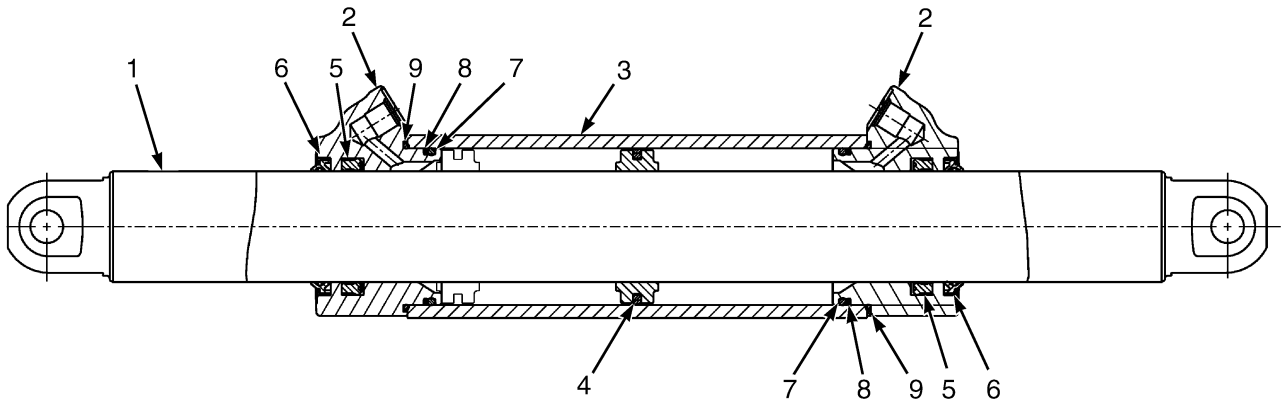

BP220524

KEY:
A: H55A-H70A
B: H40A-H50A

ITEM	PART NO.	DESCRIPTION	QTY A	QTY B
	4690838	Steering Cylinder	1	..
	4690837	Steering Cylinder	..	1
1	4266125	Piston Rod	1	..
1	4263986	Piston Rod	..	1
2	4268460	End Cap	1	..
2	4266134	End Cap	..	1
3	. . . . .	Tube Cylinder	1	1
4	4267539	Piston Seal	1	1
5	4271843	Rod Seal	2	2
6	1467150	Rod Wiper	2	2
7	1310389	O-Ring	2	2
8	1310391	Back-Up Ring	2	2
8	4325719	Back-UP Ring (Optional)	2	2
9	14191	O-Ring	2	2
	4268890	Kit-Seal	1	1

STEER COLUMN AND ATTACHING PARTS (FIGURE 14-4)

TILT ONLY

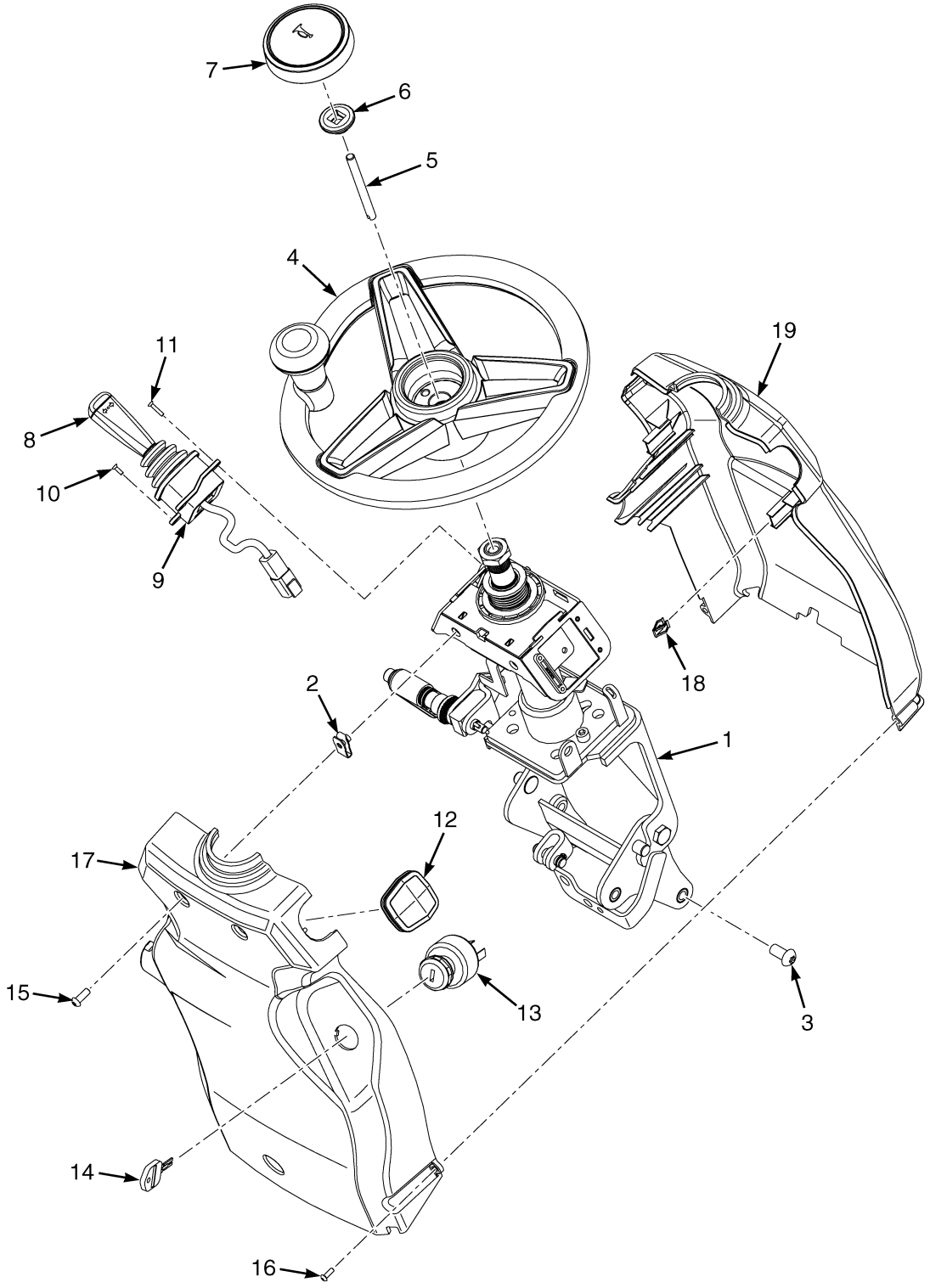

©2026 HYSTER COMPANY

STEER COLUMN AND ATTACHING PARTS

TILT ONLY

KEY:
A: Key Start Switch
B: Pushbutton Start

ITEM	PART NO.	DESCRIPTION	QTY A	QTY B
1	~~4711209~~			
	4717758	Steering Column (☞Figure 14-6)	1	1
2	1566420	Nut (Foldover)	3	3
3	4268868	Screw	4	4
4	**b** 4694059	Steering Wheel - with spinner knob	1	1
4	4704039	Knob (Spinner)	1	1
4	**b** 4704040	Nut	1	1
4	**b** 4704041	Cap (Spinner knob)	1	1
4	**b** 4704042	Bolt (Shoulder - Spinner Knob)	1	1
4	**e** 4727632	Steering Wheel - with spinner knob	1	1
4	**b** 4694061	Steering Wheel - without spinner knob	1	1
4	**e** 4727633	Steering Wheel - without spinner knob	1	1
5	**b** ~~1661879~~			
	4359534	Rod (Horn Button)	1	1
5	**b** 4355043	Rod (Optional)	1	1
5	**e** ~~1661879~~			
	4359534	Rod (Horn Button)	1	1
6	2111049	Nut (Horn Button)	1	1
7	**b** 4694060	Horn Button	1	1
7	**e** 4727631	Horn Button	1	1
8	4260907	Lever - Directional (LH)	1	1
8	4273469	Lever - Directional Control (Alternate Part)	1	1
8	4273470	Lever - Turn Signal (LH Optional)	1	1
8	4260908	Lever - Turn Signal (RH)	1	1
8	4273470	Lever - Turn Signal (RH) (Alternate Part)	1	1
8	4260909	Lever - Wiper Control (RH Optional)	1	1
8	4275119	Lever - Wiper Control (RH Optional) (Alternate Part)	1	1
9	**c** 4698305	Adapter	1	1
10	**c** 4045015	Screw	4	4
11	4045017	Screw	4	4
12	4694743	Plug - Column Lever Blank (LH or RH as needed)	1	1
13	**a** 4153136	Ignition Switch (w/o Key) (Keyless Start)	1	..
13	**d** 4707391	Ignition Switch (Key and Keyless Start)	1	..
13	4701488	Push Button Switch	..	1
14	1337197	Key Set	1	..
14	186304	Key	2	..
14	1687435	Knob (Keyless Start)	1	..
15	1510126	Screw (Button Head)	3	3
16	4216684	Screw	2	2
17	4691738	Cover	1	..
17	4714879	Cover (Alternate Part)	1	..
17	4691737	Cover , Lower	..	1
17	4714880	Cover (Alternate Part)	..	1
18	2065667	Clip	2	2
19	4691741	Cover	1	1

©2026 HYSTER COMPANY

STEER COLUMN AND ATTACHING PARTS

TILT ONLY

KEY:
A: Key Start Switch
B: Pushbutton Start

ITEM	PART NO.	DESCRIPTION	QTY A	QTY B
19	4714834	Cover (Alternate Part)	1	1

FOOTNOTES:

a → 11/2020
b → 12/2022
c → 6/2021
d 11/2020 →
e 12/2022 →

©2026 HYSTER COMPANY

NOTES

STEER COLUMN AND ATTACHING PARTS (FIGURE 14-5)
TILT AND TELESCOPE

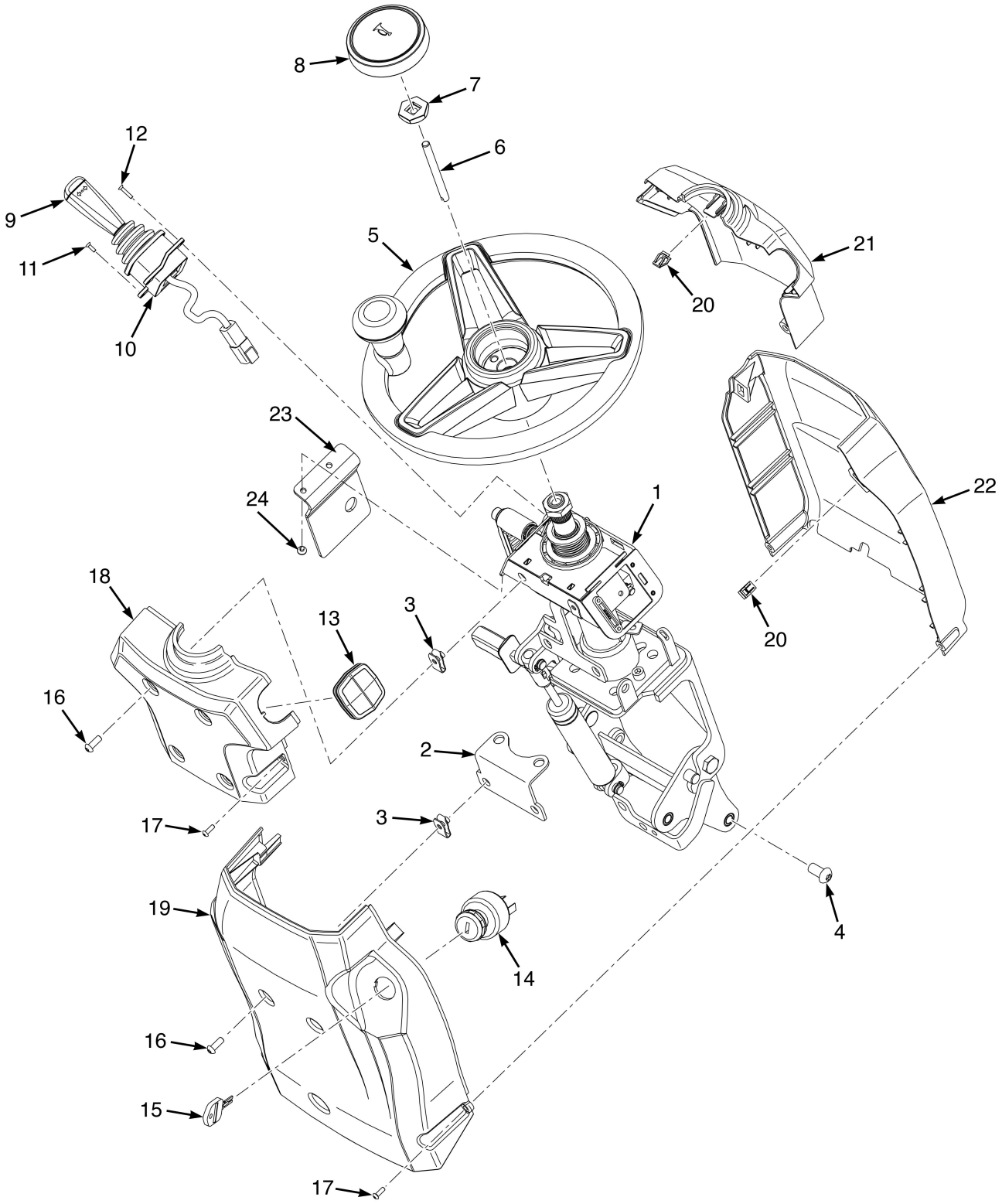

©2026 HYSTER COMPANY

STEER COLUMN AND ATTACHING PARTS
TILT AND TELESCOPE

KEY:
A: Key Switch Start
B: Pushbutton Start

ITEM	PART NO.	DESCRIPTION	QTY A	QTY B
1	**d** 4693541	Steering Column - Tilt and Telescope (☞Figure 14-7)	1	1
1	**g** 4724603	Steering Column	1	1
2	4695209	Bracket	1	1
3	1566420	Nut (Foldover)	7	7
4	4268868	Screw	4	4
5	**b** 4694059	Steering Wheel - with spinner knob	1	1
5	**f** 4727632	Steering Wheel - with spinner knob	1	1
5	**b** 4704039	Knob (Spinner)	1	1
5	**b** 4704040	Nut	1	1
5	**b** 4704041	Cap (Spinner knob)	1	1
5	**b** 4704042	Bolt (Shoulder - Spinner Knob)	1	1
5	**b** 4694061	Steering Wheel - without spinner knob	1	1
5	**f** 4727633	Steering Wheel - without spinner knob	1	1
6	**b** ~~1661879~~			
	4359534	Rod (Horn Button)	1	1
6	**b** 4355043	Rod (Optional)	1	1
6	**f** ~~1661879~~			
	4359534	Rod (Horn Button)	1	1
7	2111049	Nut (Horn Button)	1	1
8	**b** 4694060	Horn Button	1	1
8	**f** 4727631	Horn Button	1	1
9	4260907	Lever - Directional (LH)	1	1
9	4273469	Lever - Directional Control (LH) (Alternate Part)	1	1
9	4273470	Lever - Turn Signal (LH Optional)	1	1
9	4260908	Lever - Turn Signal (RH)	1	1
9	4273470	Lever - Turn Signal (RH) (Alternate Part)	1	1
9	4260909	Lever - Wiper Control (RH Optional)	1	1
9	4275119	Lever - Wiper Control (RH Optional) (Alternate Part)	1	1
10	**c** 4698305	Adapter	1	1
11	**c** 4045015	Screw	4	4
12	4045017	Screw	4	4
13	4694743	Plug - Column Lever Blank (LH or RH as needed)	1	1
14	**a** 4153136	Ignition Switch (w/o Key) (Keyless Start)	1	..
14	**e** 4707391	Ignition Switch (Key and Keyless Start)	1	..
14	4701488	Push Button Switch	..	1
15	1337197	Key Set	1	..
15	186304	Key	2	..
15	1687435	Knob (Keyless Start)	1	..
16	1510126	Screw (Button Head)	7	8
17	4216684	Screw	3	2
18	4691739	Cover , Upper	1	1
19	4691724	Cover , Lower	1	..
19	4691740	Cover , Lower	..	1
20	2065667	Clip	4	4
21	4691742	Cover , Upper	1	1

©2026 HYSTER COMPANY

STEER COLUMN AND ATTACHING PARTS
TILT AND TELESCOPE

KEY:
A: Key Switch Start
B: Pushbutton Start

ITEM	PART NO.	DESCRIPTION	QTY A	QTY B
22	4691740	Cover , Lower	1	1
23	**g** 4721915	Boot	1	1
24	**g** 2100710	Fastener	1	1

FOOTNOTES:

a → 11/2020
b → 12/2022
c → 6/2021
d → 9/2022
e 11/2020 →
f 12/2022 →
g 9/2022 →

©2026 HYSTER COMPANY

NOTES

STEER COLUMN ASSEMBLY (FIGURE 14-6)

TILT ONLY

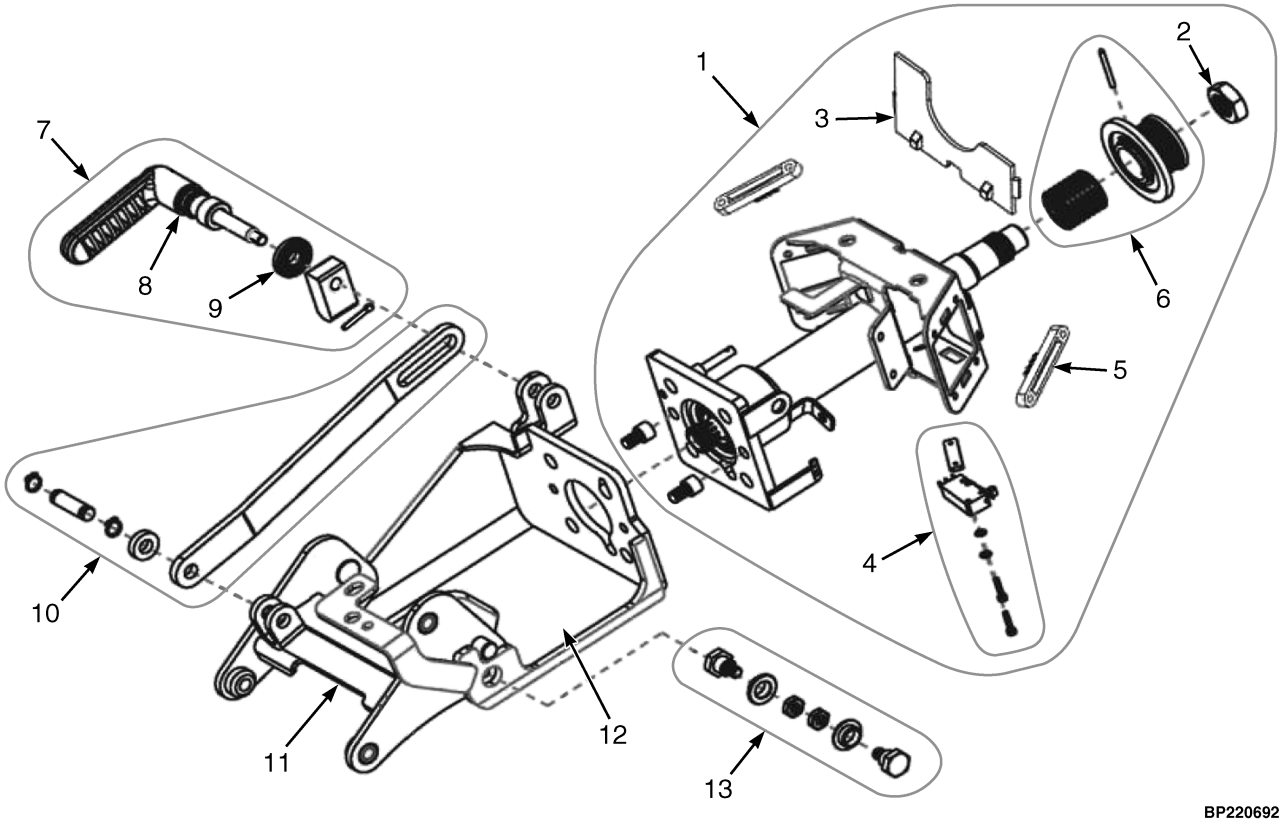

©2026 HYSTER COMPANY

STEER COLUMN ASSEMBLY
TILT ONLY

ITEM	PART NO.	DESCRIPTION	QTY
	~~4711209~~		
	4717758	Steering Column	1
1	4304685	Kit-Service (Upper Unit)	1
2	1562492	Kit-Nut	1
3	4304691	Cover (Dust)	1
4	4304693	Kit-Service (Horn Switch)	1
5	4304690	Stand Off (Flasher)	1
6	4304692	Kit-Service (Horn Actuator)	1
7	4304686	Kit-Service (Tilt Handle)	1
8	4340253	Handle	1
9	4304694	Washer , Serrated Clamp	1
10	4304687	Kit-Service (Tilt Bar)	1
11	4304698	Kit-Service (Lower Weldment)	1
12	4304699	Kit-Service (Middle Weldment)	1
13	4038677	Kit Pivot (Lower)	1

©2026 HYSTER COMPANY

STEER COLUMN ASSEMBLY (FIGURE 14-7)
TILT AND TELESCOPE

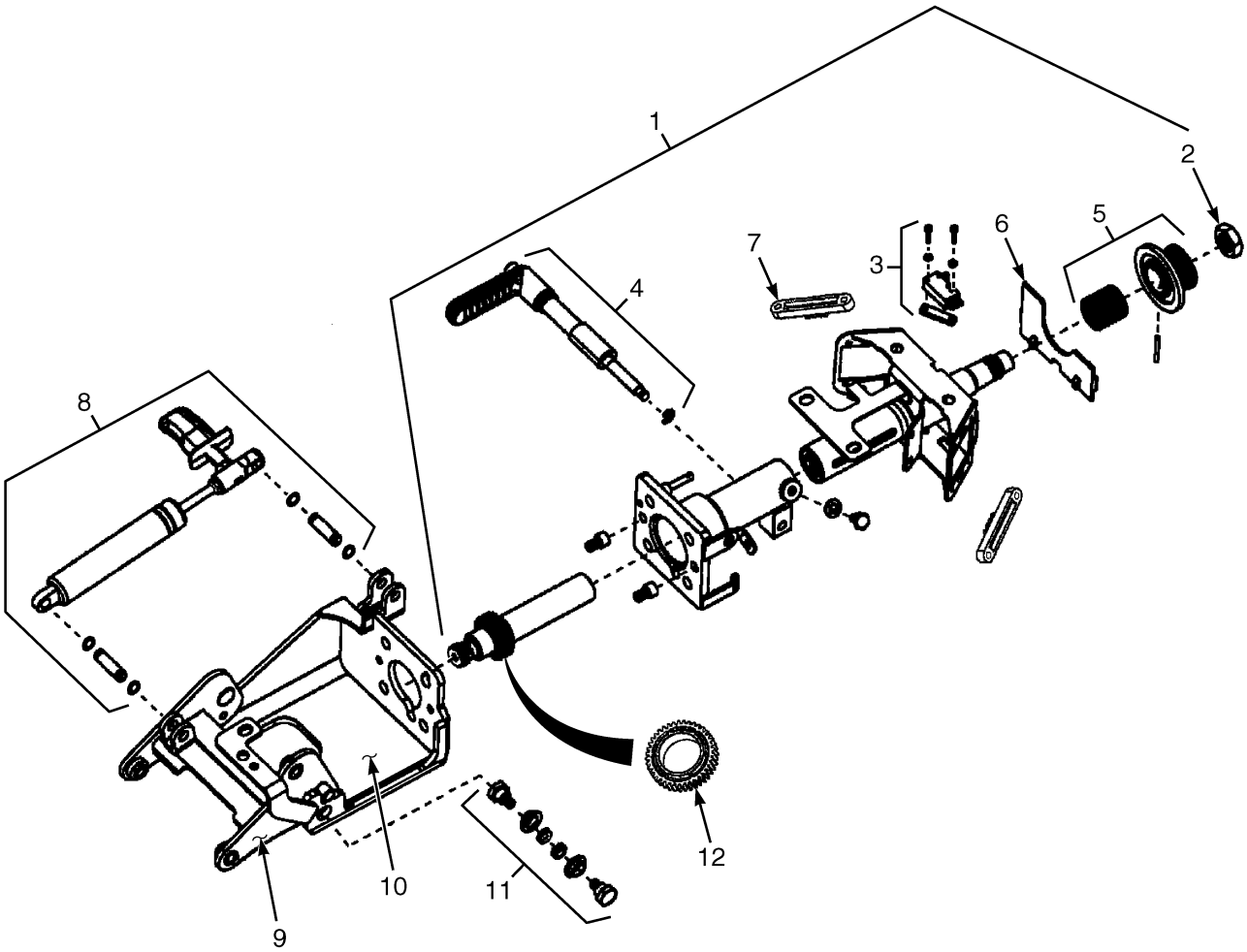

BP220605

©2026 HYSTER COMPANY

ITEM	PART NO.	DESCRIPTION	QTY
	4693541	Steering Column - Tilt and Telescope	1
1	4304695	Kit-Service (Upper Unit)	1
2	1562492	Kit-Nut	1
3	4304693	Kit-Service (Horn Switch)	1
4	4304696	Kit-Service (Telescoping Lock)	1
5	4304692	Kit-Service (Horn Actuator)	1
6	4304691	Cover (Dust)	1
7	4304690	Stand Off (Flasher)	1
8	4304700	Wheel (Internal Gear)	1
9	4304698	Kit-Service (Lower Weldment)	1
10	4304699	Kit-Service (Middle Weldment)	1
11	4038677	Kit Pivot (Lower)	1
12	4304697	Kit-Service (Gas Spring)	1

©2026 HYSTER COMPANY

SENSOR (FIGURE 14-8)
SYNCHRONOUS STEERING

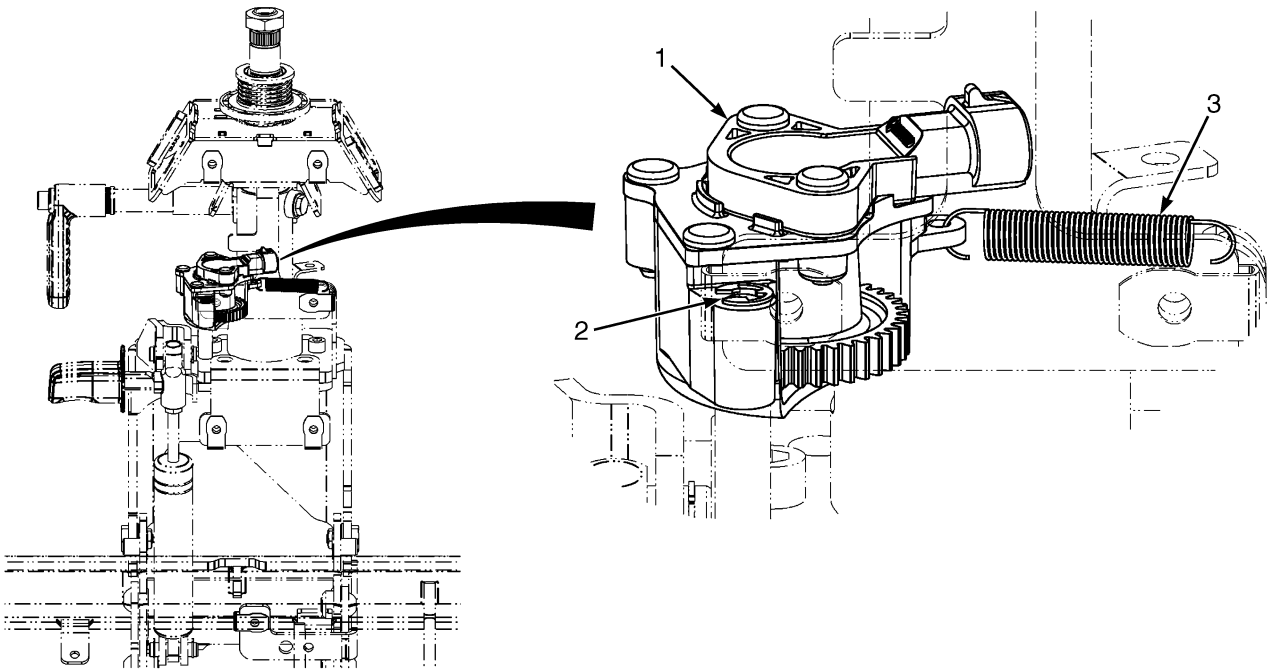

BP220610

ITEM	PART NO.	DESCRIPTION	QTY
1	1665225	Sensor Assembly	1
1	1668356	Sensor (Steering)	1
2	1672339	Spring	1
3	1359482	E-Ring	1

See Service Manual for service procedures.
©2026 HYSTER COMPANY

STEER WHEEL AND TIRE ASSEMBLY (FIGURE 14-9)

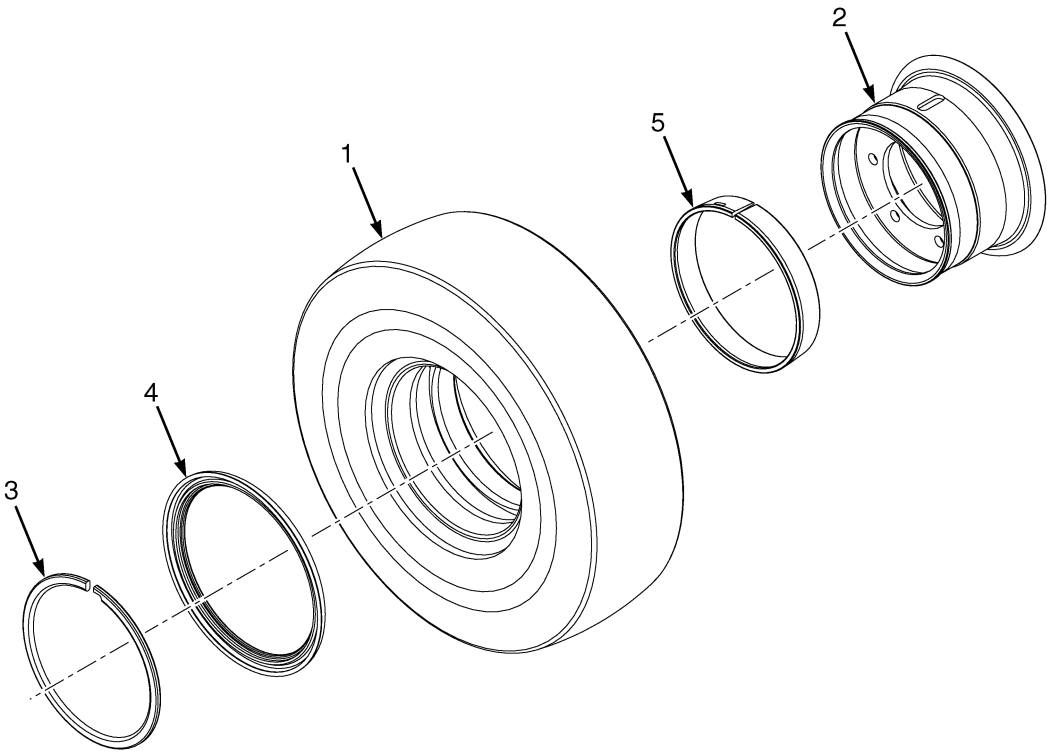

BP220631

KEY:
A: Solid (6.00-9)
B: Solid (6.50-10)
C: Solid Loc
D: Bias Ply / Radial (6.00-9)
E: Bias Ply / Radial (6.50-10)

			QTY				
ITEM	**PART NO.**	**DESCRIPTION**	**A**	**B**	**C**	**D**	**E**
	4248851	Wheel And Tire (CB/WH) - Solid Non Marking (6.0-9)	2	..	..	..	..
	4236572	Wheel And Tire (CB/WH) - Solid (6.0-9)	2	..	..	..	..
	4236572	Wheel And Tire (CB/WH) - Solid (6.0-9)	2	..	..	..	..
	4239261	Wheel And Tire (CB/WH) - Solid (6.0-9)	2	..	..	..	..
	4248853	Wheel And Tire (CB/WH) - Solid Non Marking (6.50-10) .	..	2	..	..	..
	4244128	Wheel And Tire (CB/WH) - Solid (6.50-10)	..	2	..	..	..
	4248852	Wheel And Tire (CB/WH) - Solid (6.50-10)	..	2	..	..	..
	4260189	Wheel And Tire (CB/WH) - Solid Loc (6.50-10)	..	..	2	..	..
	4268384	Wheel And Tire (CB/WH) - Radial (6.00-9)	..	..	..	2	..
	4249168	Wheel And Tire (CB/WH) - Bias-Ply (6.0-9)	..	..	..	2	..
	4268385	Wheel And Tire (CB/WH) - Radial (6.50-10)	..	..	..	..	2
	4249169	Wheel And Tire (CB/WH) - Bias-Ply (6.50-10)	..	..	..	..	2
1	4247513	Solid Pneumatic Tire - Solid Non Marking (6.0-9)	1	..	..	..	..
1	4247512	Solid Pneumatic Tire - Solid Pneu (6.0-9)	1	..	..	..	..
1	4268874	Solid Pneumatic Tire	1	..	..	..	..
1	4247509	Solid Pneumatic Tire	..	1	..	..	..
1	4268876	Solid Pneumatic Tire - Solid Pneu (6.50-10)	..	1	..	..	..
1	4247508	Solid Pneumatic Tire - Solid Pneu (6.50-10)	..	1	..	..	..

©2026 HYSTER COMPANY

KEY:
A: Solid (6.00-9)
B: Solid (6.50-10)
C: Solid Loc
D: Bias Ply / Radial (6.00-9)
E: Bias Ply / Radial (6.50-10)

			QTY				
ITEM	**PART NO.**	**DESCRIPTION**	**A**	**B**	**C**	**D**	**E**
1	4248016	Solid Pneumatic Tire (Solid Loc)	..	..	1	..	..
1	1471837	Pneumatic Tire Assembly (6.0 R9 PR)	..	..	..	1	..
1	1543059	Tire	..	..	..	1	..
1	1471832	Pneumatic Tire Assembly (6.5 R10 PR)	..	..	..	..	1
1	1544232	Pneumatic Tire (6.50 x 10-12PR)	..	..	..	..	1
2	4248129	Wheel Assy (w/ rings)	1	..	..	1	..
2	4247817	Wheel Assy (w/ rings)	..	1	..	..	1
2	4247816	Wheel Assy (w/o rings) (Solid Loc)	..	..	1	..	..
3	161884	Wheel Lock Ring	1	..	..	1	..
3	161894	Wheel Lock Ring	..	1	..	..	1
4	161885	Wheel Side Ring	1	..	..	..	..
4	1580426	Wheel Side Ring	..	1	..	..	1
5	1584693	Wedge Band	1	..	..	1	..
5	1580427	Wedge Band	..	1	..	..	1

©2026 HYSTER COMPANY

NOTES

STEER WHEEL AND TIRE ASSEMBLY (FIGURE 14-10)

MANUFACTURING OPTION

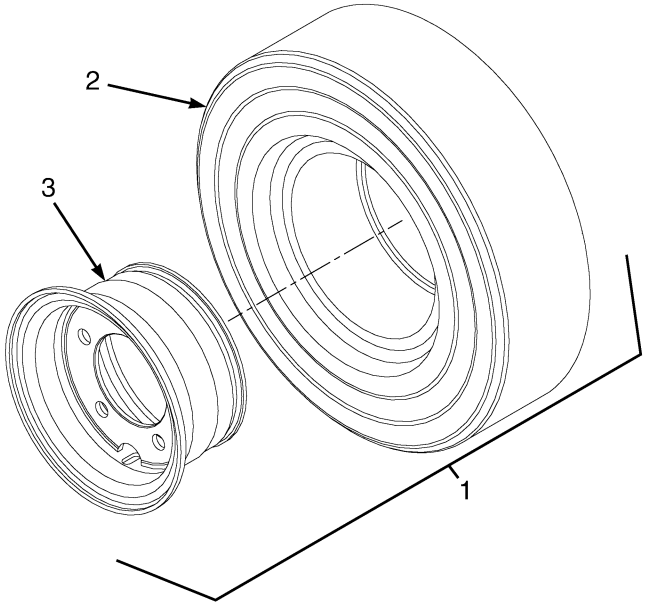

BP220221

See Service Manual for service procedures.

©2026 HYSTER COMPANY

STEER WHEEL AND TIRE ASSEMBLY

MANUFACTURING OPTION

ITEM	PART NO.	DESCRIPTION	QTY
1	4206484	Wheel And Tire (CB/WH) (6.00-9)	2
1	4206485	Wheel And Tire (CB/WH) (Assembly)	2
2	4206476	Solid Pneumatic Tire (6.00-9)	1
2	4206477	Solid Pneumatic Tire	1
3	4206480	Wheel Assy	1
3	4206481	Wheel Assy	1

©2026 HYSTER COMPANY

NOTES

©2026 HYSTER COMPANY

15 BRAKE SYSTEM

SECTION 15
BRAKE SYSTEM

DESCRIPTION **PAGE**

AUTOPARKING VALVE
MOUNTING - POWERSHIFT TRANSMISSION 15-2
MOUNTING - HYDROSTATIC TRANSMISSION 15-4
BRAKE ACTUATOR ARRANGEMENT
DRY BRAKE 15-5
WET BRAKE - BOOSTED 15-8
BRAKE ASSEMBLY
DRY BRAKE 15-12
BRAKE MASTER CYLINDER ASSEMBLY
DRY BRAKE 15-15
BRAKE PEDAL
DUAL 15-18
SINGLE 15-16
DRIVE AXLE BRAKE PLUMBING
HYDROSTATIC TRANSMISSION (→ 3/2023) 15-24
HYDROSTATIC TRANSMISSION - PAGE 1 OF 2 (3/2023 ↔ 12/2025) 15-28
HYDROSTATIC TRANSMISSION - PAGE 1 OF 2 (12/2025 →) 15-30
HYDROSTATIC TRANSMISSION - PAGE 2 OF 2 (3/2023 ↔ 12/2025) 15-32
HYDROSTATIC TRANSMISSION - PAGE 2 OF 2 (12/2025 →) 15-34
WET BRAKE (→ 12/2020) 15-20
WET BRAKE (12/2020 →) 15-22
PARKING BRAKE LEVER
ASSEMBLY (2/2022 ↔ 9/2023) 15-39
ASSEMBLY (9/2023 →) 15-40
DRY BRAKE (→ 2/2022) 15-36
DRY BRAKE (2/2022 →) 15-38
PARKING BRAKE VALVE
ASSEMBLY - POWERSHIFT TRANSMISSION 15-42
ASSEMBLY - HYDROSTATIC TRANSMISSION 15-43
Q-CURRENT SWITCH
PARKING BRAKE - DRY BRAKE 15-45

©2026 HYSTER COMPANY

AUTOPARKING VALVE (FIGURE 15-1)
MOUNTING — POWERSHIFT TRANSMISSION

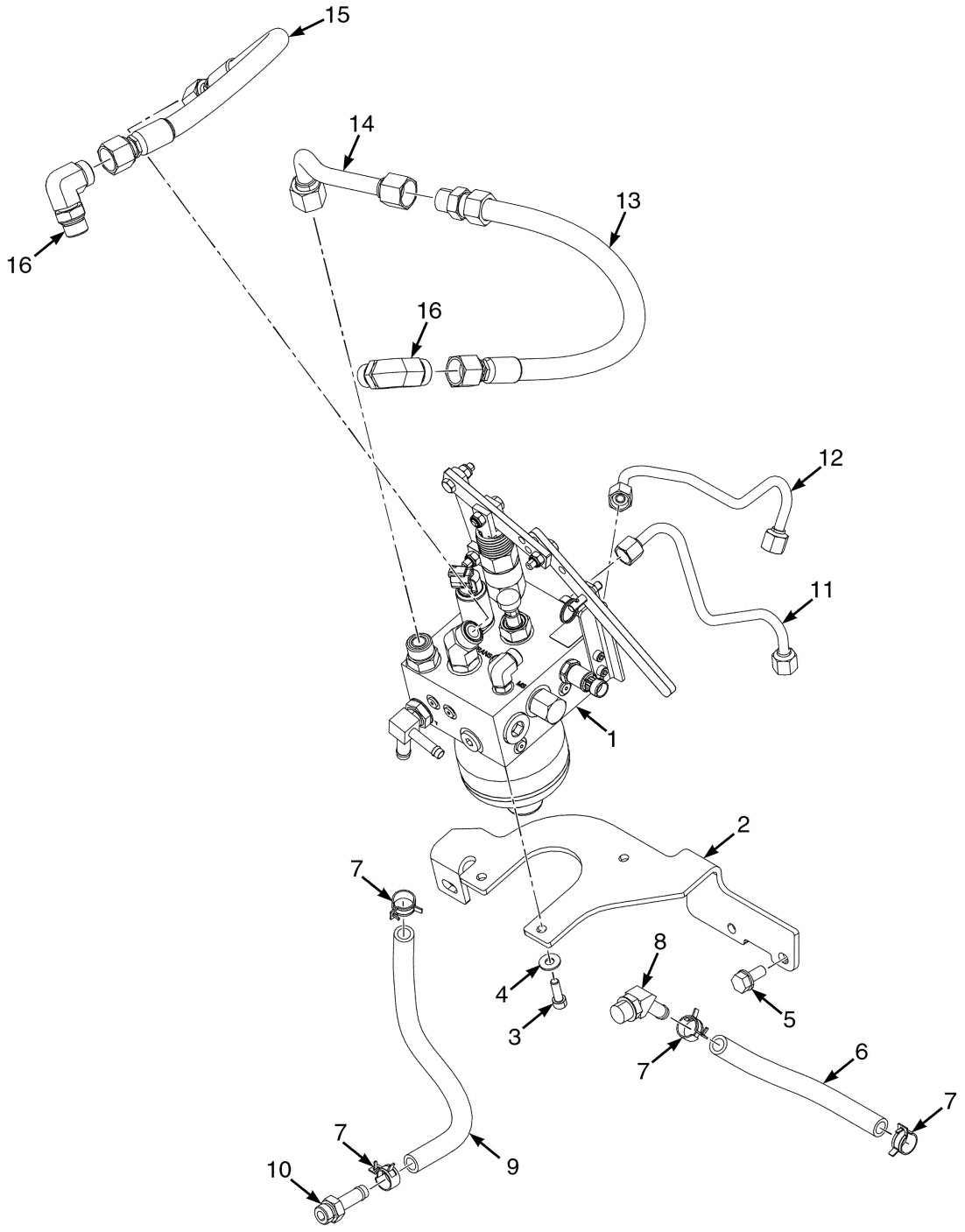

©2026 HYSTER COMPANY

AUTOPARKING VALVE

MOUNTING – POWERSHIFT TRANSMISSION

ITEM	PART NO.	DESCRIPTION	QTY
1	**a** 4309322	Valve (Assembly)	1
1	**b** 4320306	Valve (Assembly)	1
1	**c** 4339772	Parking Brake Valve (Assembly)	1
1	**e** 4353570	Parking Brake Valve (Assembly) (☞Figure 15-20)	1
2	**a** 4266596	Bracket - Parking Brake Valve	1
2	**d** 4320305	Bracket (Valve)	1
3	**a** 296011	Capscrew	3
3	**d** 1583611	Capscrew	3
4	**a** 296419	Washer	3
5	**a** 1586013	Capscrew	3
5	**d** 4276659	Capscrew	3
6	4709997	Hose	1
6	81020752	Hose (Alternate Part)	1
7	1502006	Hose Clamp	4
8	222502	Fitting	1
8	16484	O-Ring	1
9	4709996	Hose	1
10	171007	Fitting	1
10	16484	O-Ring	1
11	4706649	Tube Assy	1
12	4706650	Tube Assy	1
13	4708886	Hose Assy (High Temp, High Pressure)	1
14	4693694	Tube Assy	1
15	4712651	Hose Assy	1
16	1487067	Fitting	2

FOOTNOTES:

a → 10/2021
b 10/2021 ↔ 2/2022
c 2/2022 ↔ 11/2022
d 10/2021 →
e 11/2022 →

AUTOPARKING VALVE (FIGURE 15-2)
MOUNTING — HYDROSTATIC TRANSMISSION

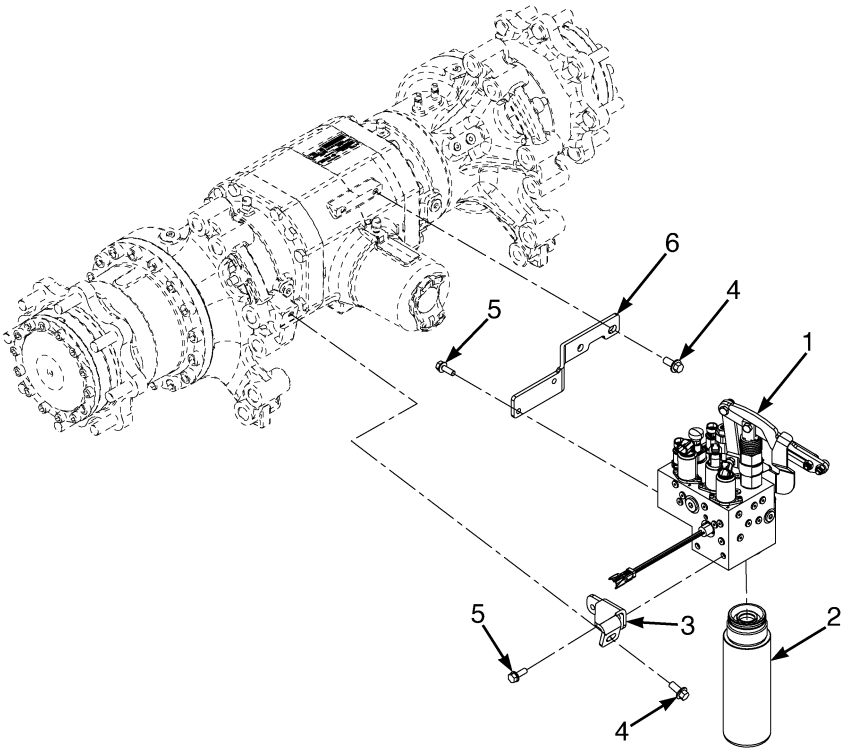

BP040454

ITEM	PART NO.	DESCRIPTION	QTY
1	4325530	Brake Valve (HST) (☞Figure 15-21)	1
2	4363049	Filter , Housing and filter (HST)	1
3	4341765	Bracket , Mounting (LH)	1
4	4276659	Capscrew	3
5	1583611	Capscrew	4
6	4341764	Bracket , Mounting (RH)	1

©2026 HYSTER COMPANY

BRAKE ACTUATOR ARRANGEMENT (FIGURE 15-3)
DRY BRAKE

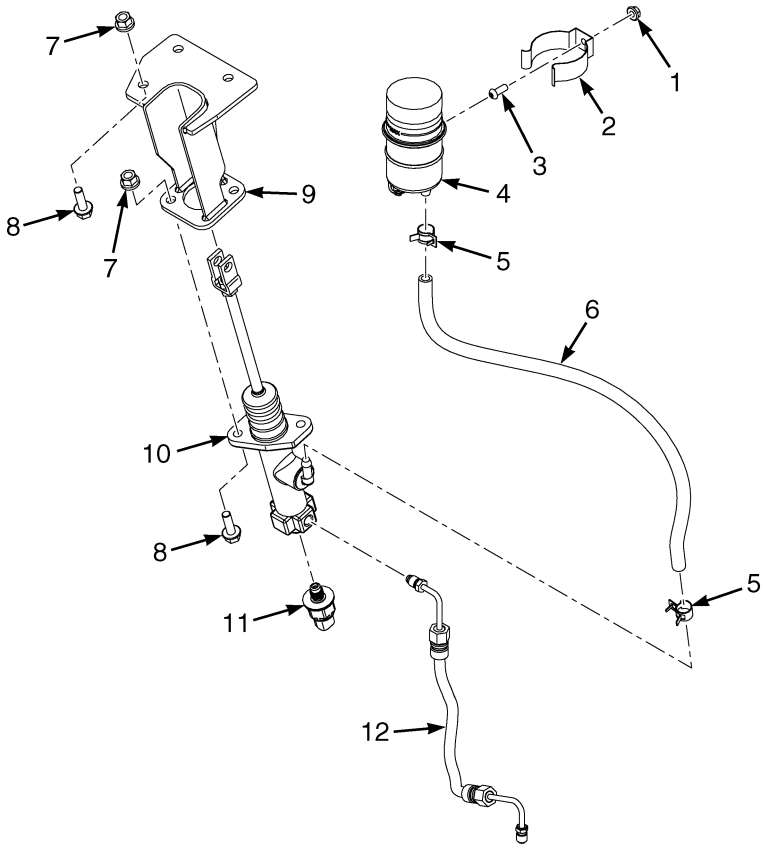

ITEM	PART NO.	DESCRIPTION	QTY
1	**a** ~~1307884~~		
	1514429	Nut	1
1	**b** 1480237	Nut (Foldover)	1
1	**c** ~~1382472~~		
	1502543	Nut	1
2	**a** 2021353	Holder , Reservoir Tank	1
2	**b** 4121575	Clamp	1
2	**c** 4354388	Clamp	1
3	**a** 1510126	Screw (Button Head)	1
3	**b** 1527880	Capscrew	1
3	**c** ~~4109993~~		
	1527879	Capscrew	1
4	~~4695885~~		
	4726452	Reservoir (Assembly)	1
4	2021341	Cap	1
4	2021343	Packing	1
4	4726451	Tank (Reservoir)	1
5	1502003	Hose Clamp	2
6	4252332	Hose - Brake Inlet	1
7	1544153	Locknut	5
8	1510113	Capscrew	5
9	4239791	Mounting Weldment (Master Cylinder)	1
10	1536724	Master Cylinder (☞Figure 15-6)	1

©2026 HYSTER COMPANY

ITEM	PART NO.	DESCRIPTION	QTY
11	~~1707679~~		
	~~4083331~~		
	~~4213803~~		
	4083331	Pressure Transducer	1
12	4252333	Hose Assy	1

FOOTNOTES:

a → 1/2022
b 1/2022 ↔ 2/2023
c 2/2023 →

©2026 HYSTER COMPANY

NOTES

BRAKE ACTUATOR ARRANGEMENT (FIGURE 15-4)
WET BRAKE — BOOSTED

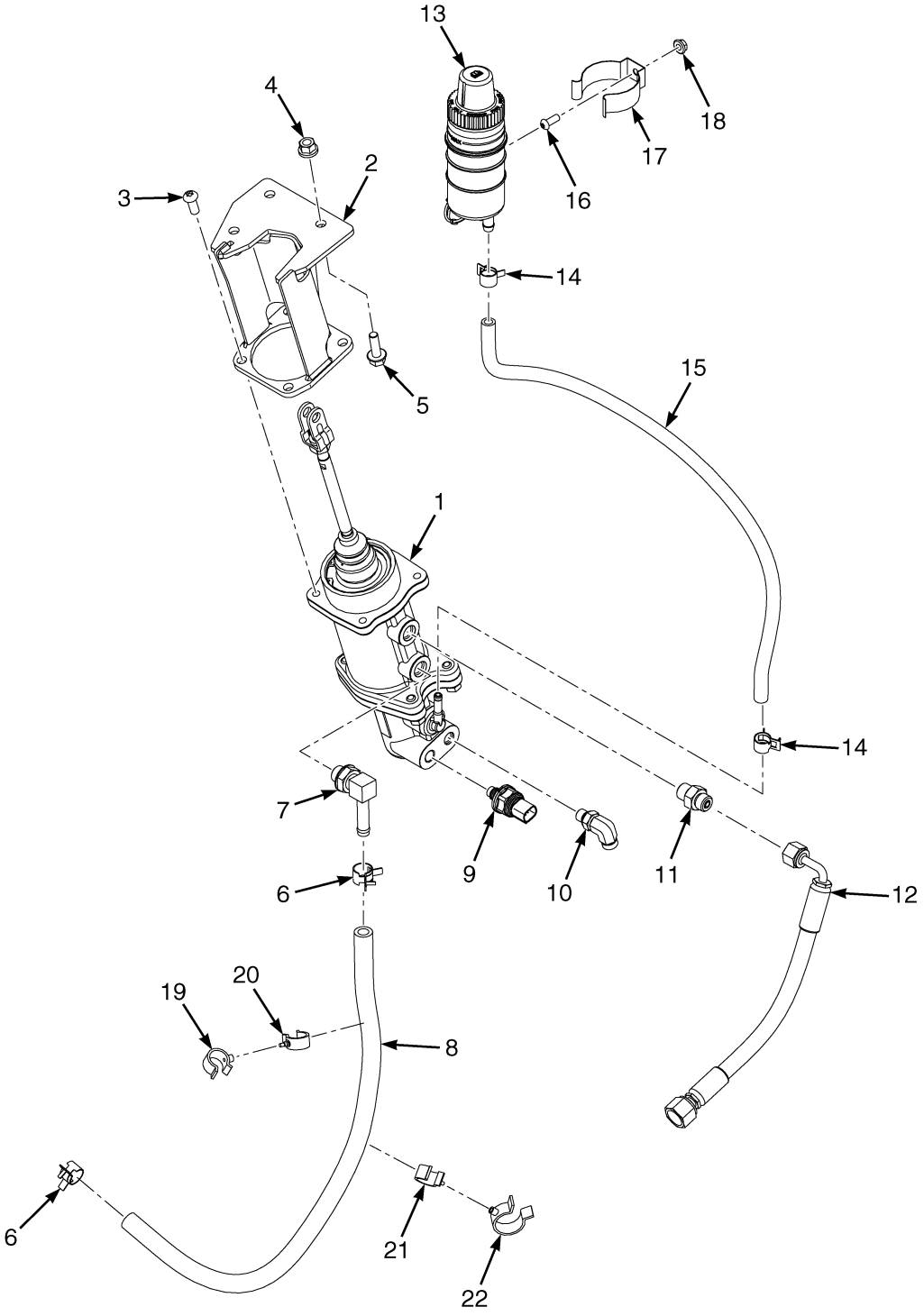

BP040334

©2026 HYSTER COMPANY

BRAKE ACTUATOR ARRANGEMENT
WET BRAKE – BOOSTED

ITEM	PART NO.	DESCRIPTION	QTY
1	4275148	Master Cylinder (Boosted)	1
1	4304447	Master Cylinder	1
1	4305934	Kit-Repair Master Cylinder (Includes Piston)	1
1	4305935	Kit-Repair Minor-Master Cyl (Seals)	1
2	4275145	Mounting Weldment	1
3	1529990	Screw	4
4	1544153	Locknut	3
5	1510113	Capscrew	3
6	1569616	Hose Clamp	2
7	17221	Fitting	1
7	16483	O-Ring	1
8	1378537	Hose	1
9	~~1707679~~		
	~~4083331~~		
	~~4213803~~		
	4083331	Pressure Transducer	1
10	1487058	Fitting	1
11	**a** 1486738	Fitting	1
11	**g** 1487059	Fitting	1
12	**a** 4709408	Hose Assy	1
12	**g** 4728079	Hose Assy (High Temp, Med Pressure)	1
13	~~4641801~~		
	4726883	Reservoir (Integrated Contam Separator)	1
13	1645381	Diaphragm	1
13	1646397	Cap	1
13	4726450	Tank	1
14	1502003	Hose Clamp	2
15	**c** 1644938	Brake Hose	1
15	**f** 1659020	Hose	1
16	**b** 1510126	Screw (Button Head)	1
16	**d** 1527880	Capscrew	1
16	**e** ~~4109993~~		
	1527879	Capscrew	1
17	**b** 2021353	Holder , Reservoir Tank	1
17	**d** 4121575	Clamp	1
17	**e** 4354388	Clamp	1
18	**b** ~~1307884~~		
	1514429	Nut	1
18	**d** 1480237	Nut (Foldover)	1
18	**e** ~~1382472~~		
	1502543	Nut	1
19	1606544	Clamp (Swivel)	2
20	1542442	Clamp (Swivel)	2
21	1543698	Clamp (Swivel)	1
22	1542436	Clamp (Swivel)	1

FOOTNOTES:

a → 11/2022
b → 2/2022
c → 5/2021
d 2/2022 ↔ 3/2023
e 3/2023 →
f 5/2021 →
g 11/2022 →

©2026 HYSTER COMPANY

NOTES

BRAKE ASSEMBLY (FIGURE 15-5)
DRY BRAKE

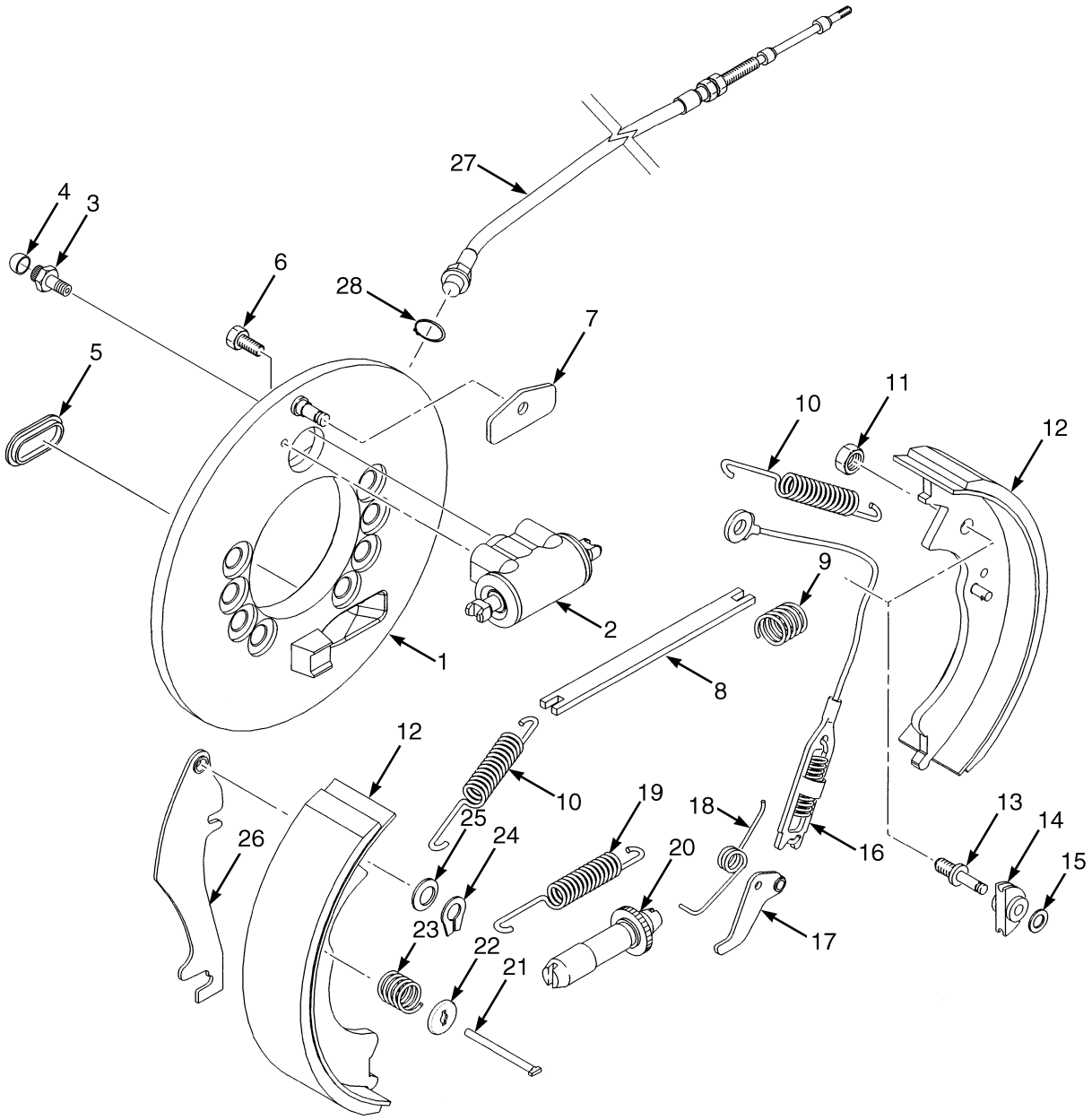

BP040047

©2026 HYSTER COMPANY

BRAKE ASSEMBLY
DRY BRAKE

KEY:
A: Right Hand
B: Left Hand

ITEM	PART NO.	DESCRIPTION	QTY A	QTY B
	4165004	Brake Assy - RH	1	..
	4165003	Brake Assy - LH	..	1
	4284902	Brake Assy (w/o cable - RH)	1	..
	4284901	Brake Assy (w/o cable - LH)	..	1
	1606086	Brake Assembly (w/o cable - RH)	1	..
	1606085	Brake Assembly (w/o cable - LH)	..	1
1	1606088	Backplate	1	..
1	1606087	Backplate	..	1
2	1565290	Wheel Cylinder	1	1
2	1334647	Kit-Repair Wheel Cylinder	1	1
3	~~1361503~~			
	4098513	Bleeder Screw	1	1
4	1361504	Cap	1	1
5	1334642	Cover	1	1
6	1565303	Bolt	2	2
7	2037343	Wear Plate	1	1
8	1360796	Strut	1	..
8	1361507	Strut	..	1
9	1360797	Spring	1	1
10	. . . . .	Spring	1	1
11	. . . . .	Nut	1	1
12	1565314	Kit-Brake Shoe	1	..
12	1565313	Kit-Brake Shoe	..	1
13	. . . . .	Pin	1	1
14	. . . . .	Sheave	1	1
15	. . . . .	Washer	1	1
16	. . . . .	Cable and Spring Assembly	1	1
17	2037518	Lever	1	..
17	2037517	Lever	..	1
18	. . . . .	Spring	1	1
19	. . . . .	Spring	1	1
20	~~1565295~~			
	1600492	Adjuster (RH)	1	..
20	~~1565294~~			
	1600491	Adjuster (LH)	..	1
21	. . . . .	Pin	2	2
22	. . . . .	Cup	4	4
23	. . . . .	Spring	2	2
24	1338916	Retainer	1	1
25	1338917	Washer	1	1
26	. . . . .	Parking Brake Lever	1	1
27	1565305	Parking Brake Cable	1	..
27	1600493	Parking Brake Cable	..	1
28	1361502	Snap Ring	1	1
	1565316	Kit-Spring	1	1

BRAKE ASSEMBLY
DRY BRAKE

KEY:
A: Right Hand
B: Left Hand

ITEM	PART NO.	DESCRIPTION	QTY A	QTY B
	1565310	Kit-Adjuster (RH)	1	..
	1565309	Kit-Adjuster (LH)	..	1
	1565311	Kit-Repair Parking Brake (LH)	..	1
	1565312	Kit-Park Brake (Parking Brake) (RH)	1	..
	1565315	Kit-Hold Down	1	1
	1375048	Parking Brake Kit-Repair, LH	..	1

See Service Manual for service procedures.
©2026 HYSTER COMPANY

BRAKE MASTER CYLINDER ASSEMBLY (FIGURE 15-6)

DRY BRAKE

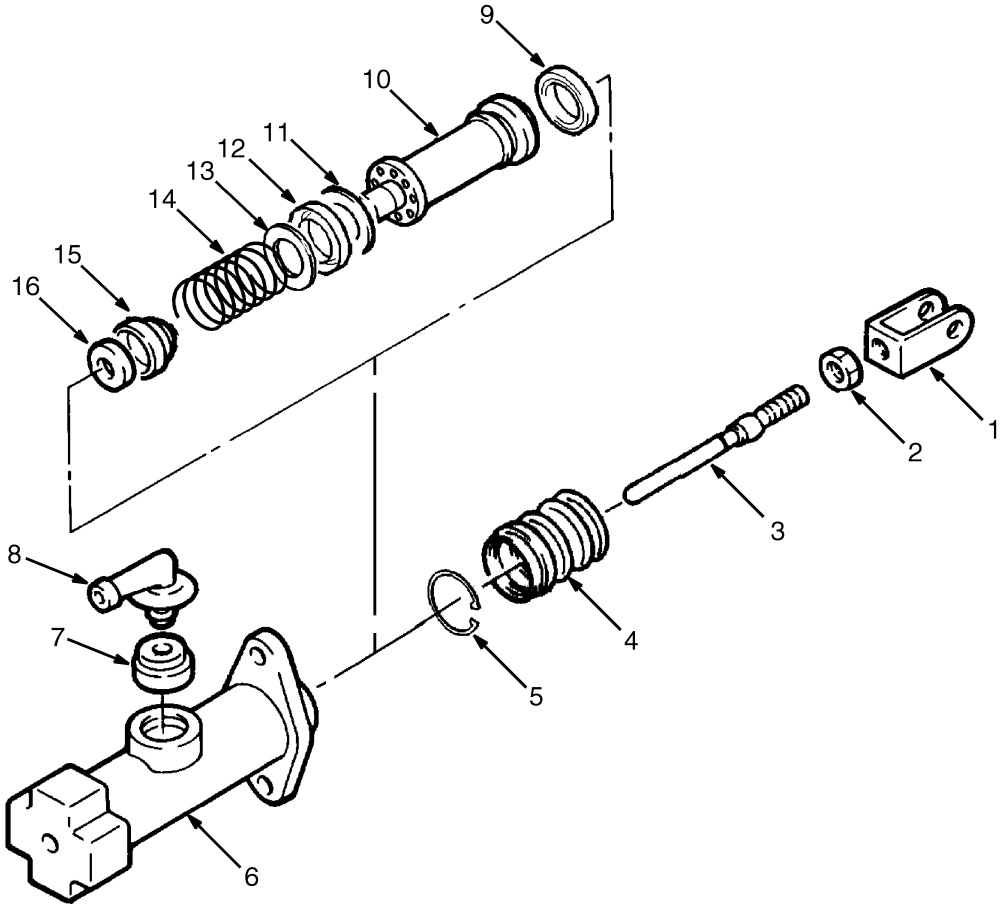

BP040123

ITEM	PART NO.	DESCRIPTION	QTY
	1536724	Master Cylinder	1
1	2041520	Yoke	1
2	1566142	Nut	1
3	1566141	Push Rod	1
4	. . . . .	Boot	1
5	. . . . .	Snap Ring	1
6	. . . . .	Housing	1
7	1566144	Gasket	1
8	1566143	Fitting	1
9	. . . . .	Seal	1
10	. . . . .	Piston	1
11	. . . . .	Spacer	1
12	. . . . .	Piston Cup	1
13	. . . . .	Retainer	1
14	. . . . .	Spring	1
15	. . . . .	Check Valve	1
16	. . . . .	Valve Seat	1
	1566131	Kit-Repair Master Cylinder	1

BRAKE PEDAL (FIGURE 15-7)
SINGLE

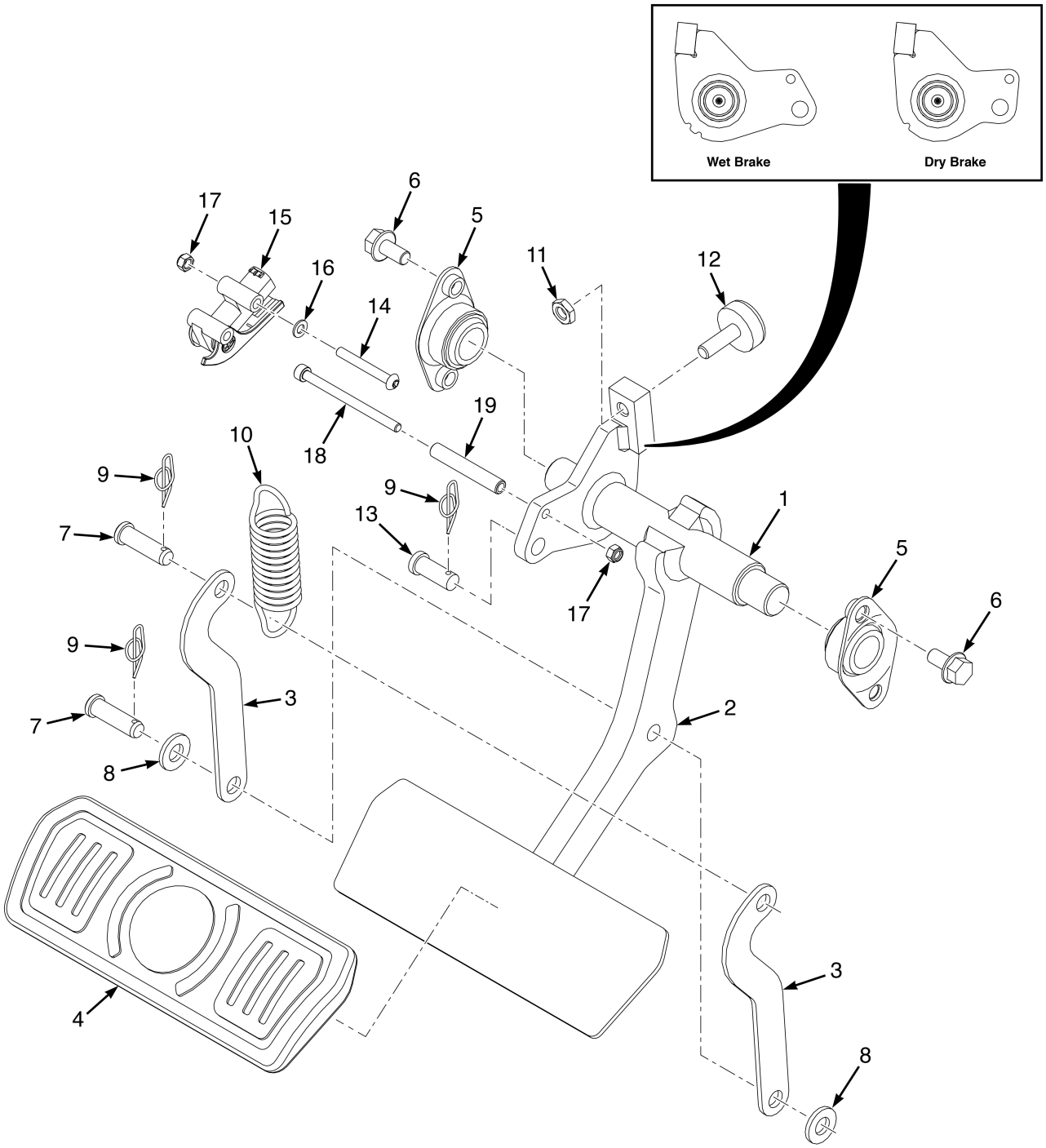

©2026 HYSTER COMPANY

BRAKE PEDAL
SINGLE

KEY:
A: Wet Brake with Pad
B: Wet Brake with Diamond Plate
C: Dry Brake with Pad
D: Dry Brake with Diamond Plate

ITEM	PART NO.	DESCRIPTION	QTY A	QTY B	QTY C	QTY D
1	4238886	Brake Pedal (Input Crank marked with two notches)	1	..	..	..
1	. . . . .	Brake Pedal	..	1	..	..
1	4238889	Brake Pedal (Input Crank marked with on notch)	..	..	1	..
1	. . . . .	Brake Pedal	..	..	..	1
1	4238897	Shaft - Pedal Pivot	1	1	1	1
2	4238898	Plate - Pedal Arm	1	1	1	1
3	. . . . .	Return Spring Link	2	2	2	2
4	4686294	Pad	1	..	1	..
5	1585575	Bushing , Flange	2	2	2	2
6	4120965	Screw	4	4	4	4
7	1194258	Pin	2	2	2	2
8	2008121	Washer	2	2	2	2
9	1351689	Locking Cotter Pin	3	3	3	3
10	363475	Spring	1	1	1	1
11	329069	Nut	1	1	1	1
12	1530311	Screw (Stop)	1	1	1	1
13	1375391	Pin (Rod End)	1	1	1	1
14	4252336	Capscrew	2	2	2	2
15	1683486	Sensor (Brake Position)	1	1	1	1
16	320155	Washer	1	1	1	1
17	302398	Locknut	3	3	3	3
18	1384967	Capscrew	1	1	1	1
19	4252338	Spacer	1	1	1	1

©2026 HYSTER COMPANY

BRAKE PEDAL (FIGURE 15-8)
DUAL

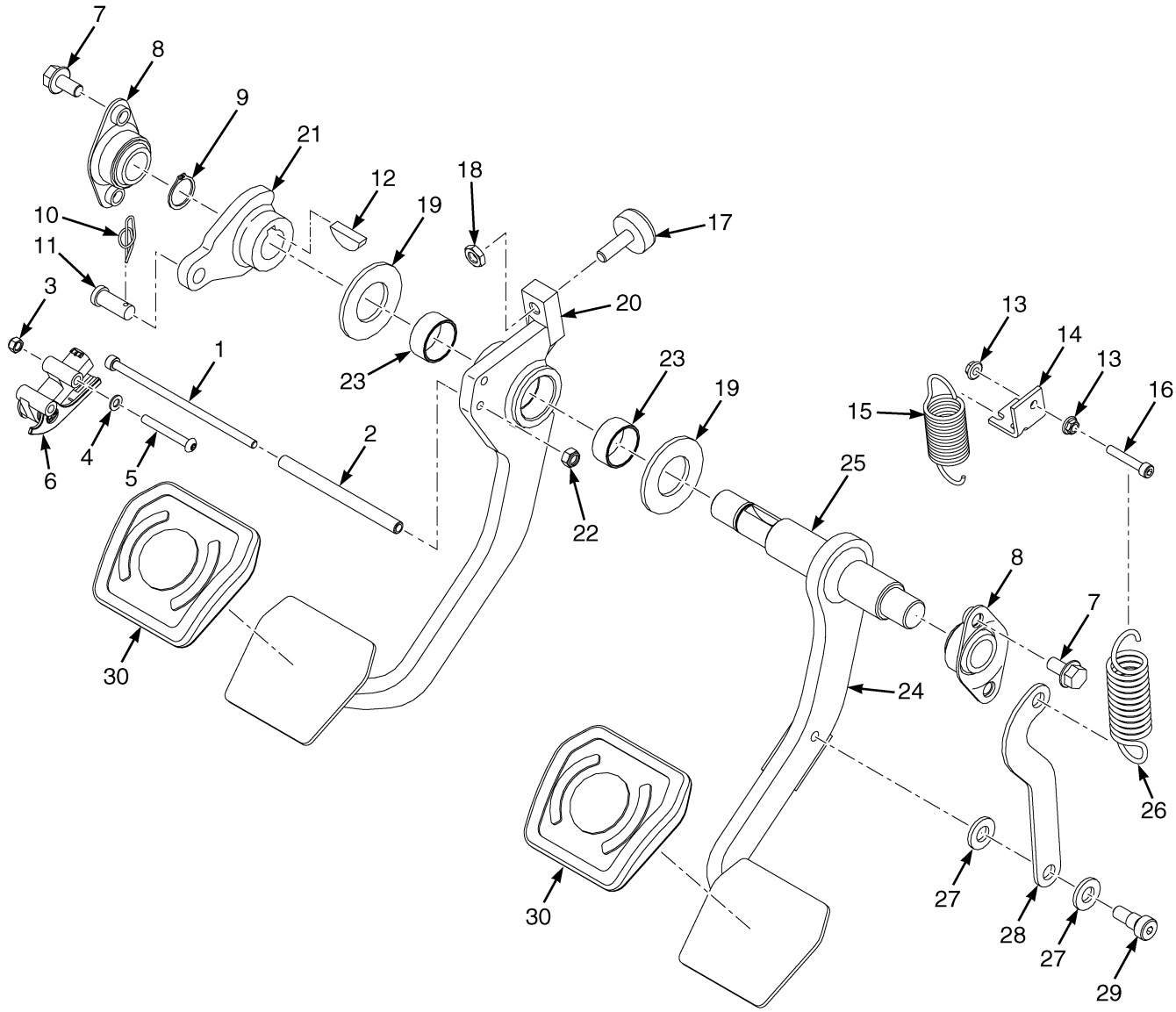

BP040312

©2026 HYSTER COMPANY

BRAKE PEDAL
DUAL

KEY:
A: Wet Brake with Pad
B: Wet Brake with Diamond Plate
C: Dry Brake with Pad
D: Dry Brake with Diamond Plate

ITEM	PART NO.	DESCRIPTION	QTY A	QTY B	QTY C	QTY D
1	1704901	Capscrew	1	1	1	1
2	4252338	Spacer	2	2	2	2
3	302398	Locknut	2	2	2	2
4	320155	Washer	1	1	1	1
5	4252336	Capscrew	2	2	2	2
6	1683486	Sensor (Brake Position)	1	1	1	1
7	~~4109993~~					
	1527879	Capscrew	4	..	4	..
7	4120965	Screw	..	4	..	4
8	1585575	Bushing , Flange	2	2	2	2
9	12929	Snap Ring	1	1	1	1
10	1351689	Locking Cotter Pin	1	2	1	1
11	1375391	Pin (Rod End)	1	2	1	1
12	206	Woodruff Key	1	1	1	1
13	1565407	Nut	2	2	2	2
14	4252331	Bracket - Spring Mount	1	1	1	1
15	1582300	Spring (Outer)	1	1	1	1
16	293758	Capscrew	1	1	1	1
17	1530311	Screw (Stop)	1	1	1	1
18	329069	Nut	1	2	1	1
19	4252330	Washer	2	2	2	2
20	4239000	Inching Pedal - LH Dual	1	..	1	..
20	4252305	Inching Pedal - LH Dual	..	1	..	1
21	4252328	Crank (Input Crank marked with two notches)	1	1	..	..
21	4252329	Crank (Input Crank marked with one notch)	..	..	1	1
22	302399	Nut	1	1	1	1
23	244540	Bushing	2	2	2	2
24	4238995	Brake Pedal (RH)	1	..	1	..
24	4252304	Brake Pedal - RH Dual	..	1	..	1
24	4238998	Plate - Pedal Pivot	1	1	1	1
25	4238887	Shaft - RH Pedal Arm	1	1	1	1
26	363475	Spring	1	1	1	1
27	2008121	Washer	2	2	2	2
28	. . . . .	Link, Return Spring	1	1	1	1
29	4238899	Socket	1	1	1	1
30	4659775	Pad - Pedal Stop	2	..	2	..

DRIVE AXLE BRAKE PLUMBING (FIGURE 15-9)

WET BRAKE (→ 12/2020)

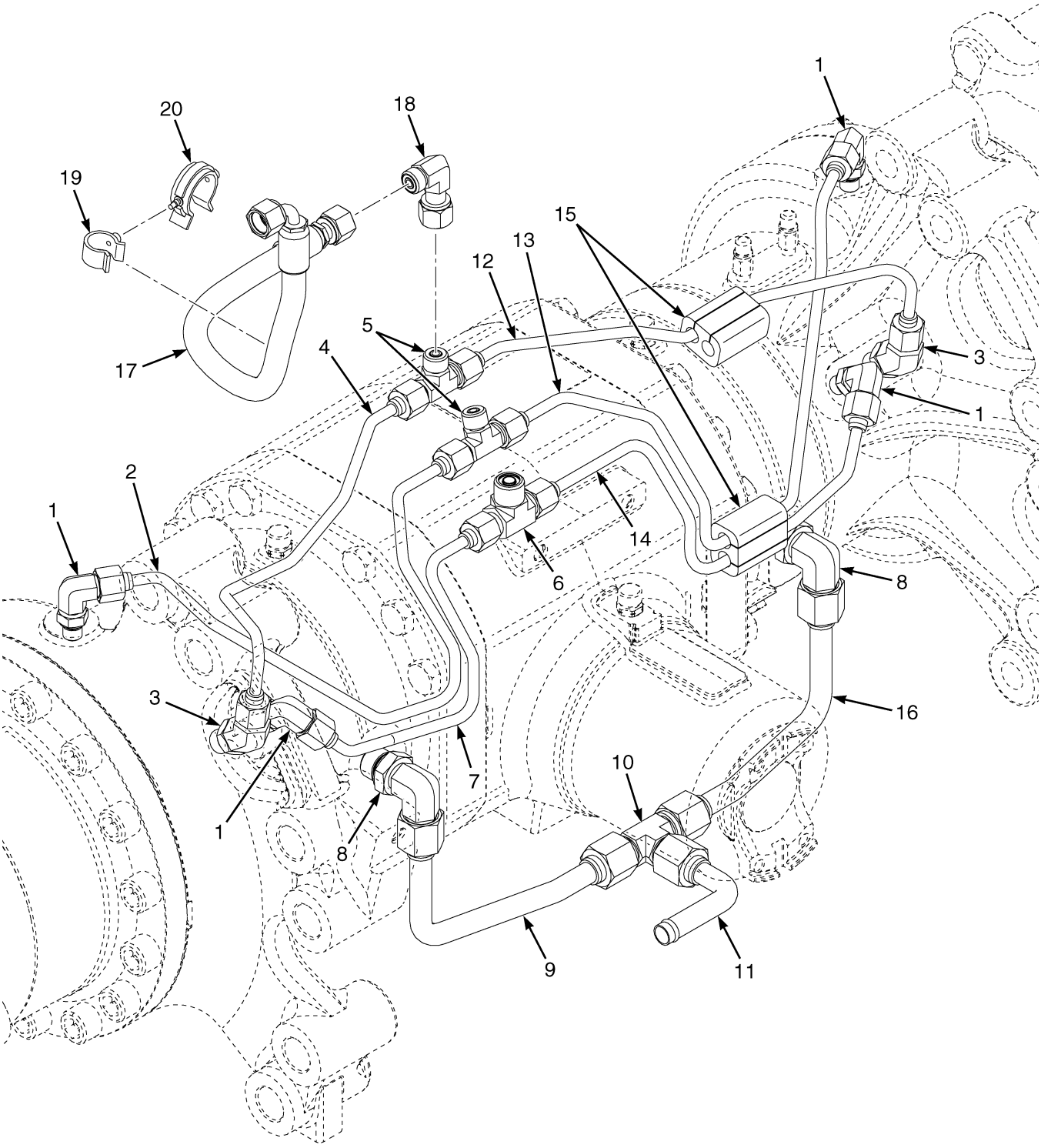

©2026 HYSTER COMPANY

ITEM	PART NO.	DESCRIPTION	QTY
1	1487058	Fitting	4
2	4698365	Tube Assy	1
3	1516198	Fitting	2
4	4698374	Tube Assy	1
5	1522424	Fitting	2
6	4270250	T-Fitting	1
7	4698358	Tube Assy	1
8	1473897	Fitting	2
9	4686320	Tube Assy - Cooling Return	1
10	1522426	Fitting	1
11	4693839	Tube Assy - Cooling Return	1
12	4698376	Tube Assy	1
13	4698359	Tube Assy	1
14	4698357	Tube Assy	1
15	2091513	Block , Mounting (Brake Tubes)	2
16	4686321	Tube Assy - Cooling Return	1
17	4686901	Hose Assy - Brake Actuation	1
17	4716340	Hose Assy - Brake Actuation (Alternate Part)	1
18	~~6996697~~		
	1486770	Fitting	1
19	1606544	Clamp (Swivel)	1
20	1569465	Clamp (Swivel)	1

DRIVE AXLE BRAKE PLUMBING (FIGURE 15-10)

WET BRAKE (12/2020 →)

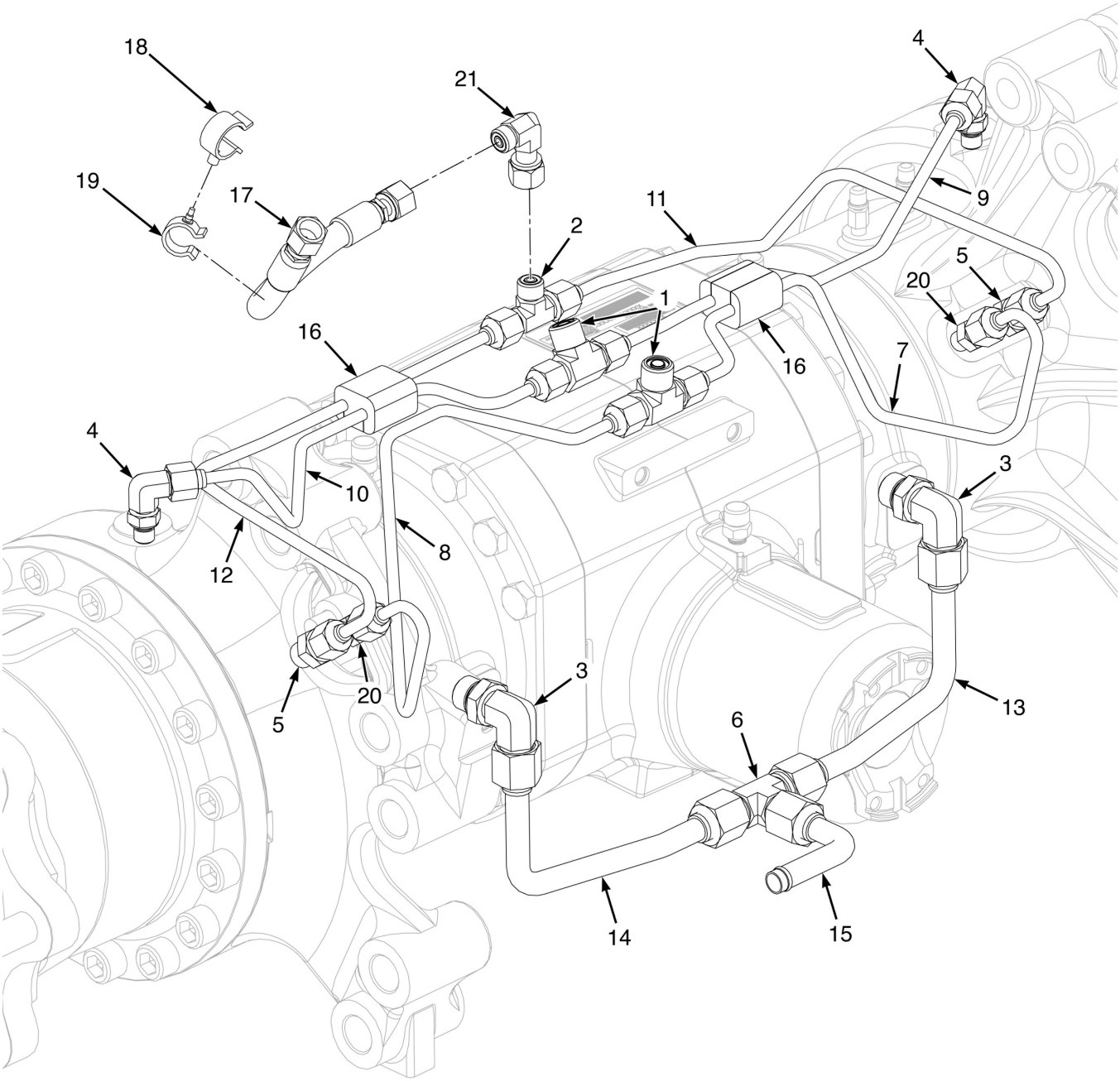

©2026 HYSTER COMPANY

DRIVE AXLE BRAKE PLUMBING

WET BRAKE (12/2020 →)

ITEM	PART NO.	DESCRIPTION	QTY
1	4270250	T-Fitting	2
2	1522424	Fitting	1
3	**a** 1473897	Fitting	2
3	**e** 1516204	Fitting	2
4	1487058	Fitting	2
5	1486738	Fitting	2
6	1522426	Fitting	1
7	4706641	Tube Assy (RH)	1
8	4706640	Tube Assy (LH)	1
9	4706645	Tube Assy - Cooling (RH)	1
10	4706644	Tube Assy - Cooling (LH)	1
11	4706642	Tube Assy - Service Brake (RH)	1
12	4706643	Tube Assy - Service Brake (LH)	1
13	**a** 4686321	Tube Assy - Cooling Return (RH)	1
13	**e** 81071565	Tube Assy - Cooling Return (RH)	1
14	4686320	Tube Assy - Cooling Return (LH)	1
14	81071517	Tube Assy - Cooling Return (LH)	1
15	4693839	Tube Assy - Cooling Return	1
16	4706652	Block - Mounting, Brake Tubes	2
17	**b** 4686901	Hose Assy - Brake Actuation	1
17	**c** 4716340	Hose Assy - Brake Actuation	1
17	**d** 4706651	Hose Assy - Brake Actuation	1
18	1569465	Clamp (Swivel)	1
18	1502053	Clamp (Swivel) (Alternate Part)	1
19	1606544	Clamp (Swivel)	1
19	1542442	Clamp (Swivel) (Alternate Part)	1
20	1486737	Fitting	2
21	**d** ~~6996697~~		
	1486770	Fitting	1

FOOTNOTES:

a → 3/2026
b → 8/2021
c 8/2021 ↔ 8/2023
d 8/2023 →
e 3/2026 →

DRIVE AXLE BRAKE PLUMBING (FIGURE 15-11)

HYDROSTATIC TRANSMISSION (→ 3/2023)

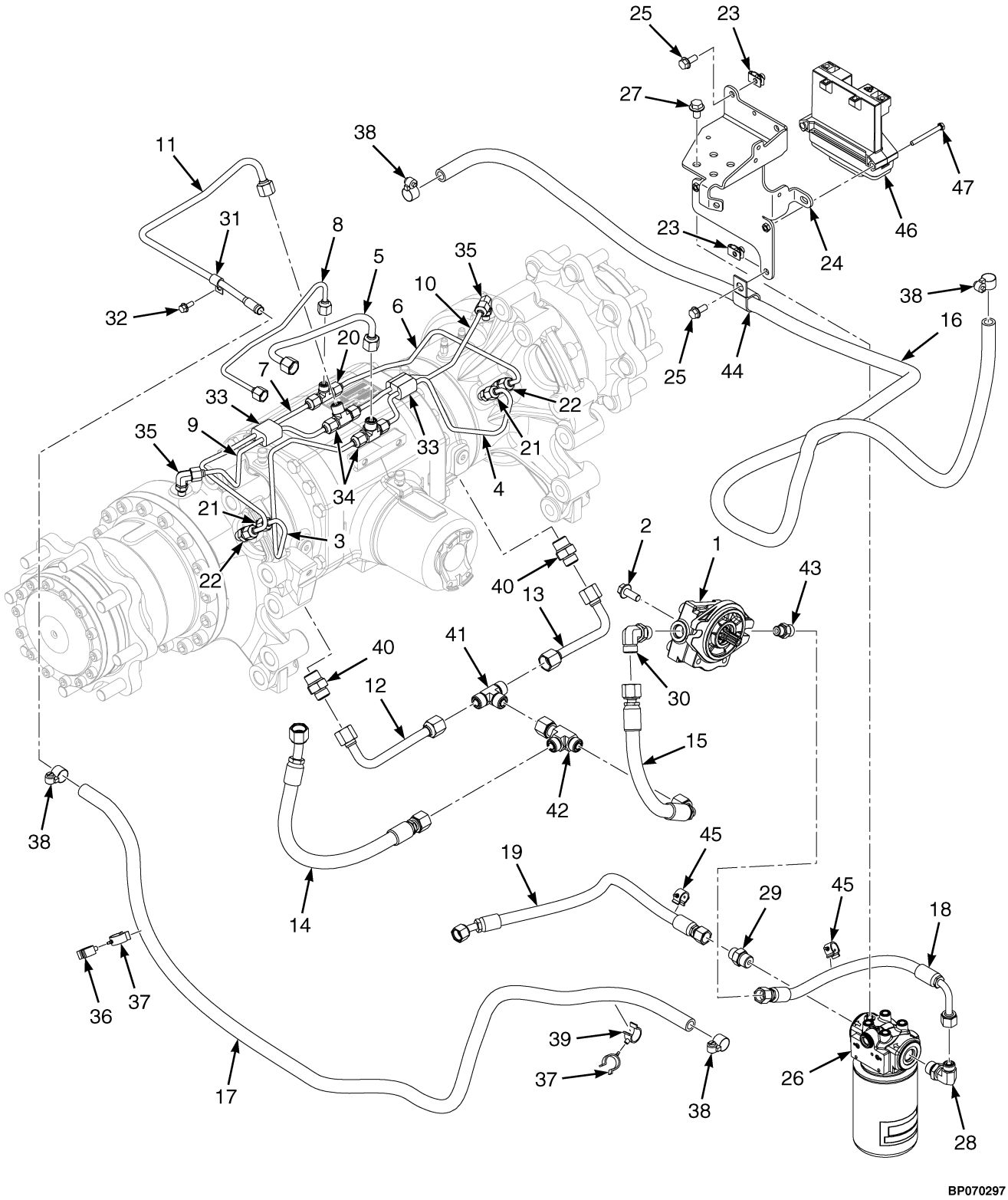

©2026 HYSTER COMPANY

DRIVE AXLE BRAKE PLUMBING

HYDROSTATIC TRANSMISSION (→ 3/2023)

ITEM	PART NO.	DESCRIPTION	QTY
1	4695667	Gear Pump - Brake	1
2	1510117	Capscrew	2
3	4706640	Tube Assy (LH)	1
4	4706641	Tube Assy (RH)	1
5	4706646	Tube Assy (Top)	1
6	4706642	Tube Assy - Service Brake (RH)	1
7	4706643	Tube Assy - Service Brake (LH)	1
8	4706647	Tube Assy (Top)	1
9	4706644	Tube Assy - Cooling (LH)	1
10	4706645	Tube Assy - Cooling (RH)	1
11	4706648	Tube Assy - Cooling (Top)	1
12	4695537	Tube Assy - Brake Pump (LH)	1
13	4695539	Tube Assy - Brake Pump (RH)	1
14	4693394	Hose Assy - Brake Pump	1
15	4695592	Hose Assy - Brake Pump Out	1
16	4695558	Hose - Brake Cool	1
17	4695567	Hose - Brake Cool	1
18	4716247	Hose Assy - Brake Pump	1
19	4716248	Hose Assy - Brake Pump	1
20	1522424	Fitting	1
21	1486737	Fitting	2
22	1486738	Fitting	2
23	1480237	Nut (Foldover)	4
24	4282377	Bracket Wldmt - Filter HST	1
25	1527880	Capscrew	4
26	4327805	Filter Head	1
26	~~4701492~~		
	4716269	Transmission Filter	1
27	1528778	Capscrew	4
28	~~4147367~~		
	1487061	Fitting	1
29	1486742	Fitting	1
30	1473897	Fitting	1
31	132131	Clamp	1
32	~~4111055~~		
	1527876	Capscrew	1
33	4706652	Block - Mounting, Brake Tubes	2
34	4270250	T-Fitting	2
35	1487058	Fitting	2
36	1502059	Clamp (Swivel)	1
37	1502066	Clamp (Swivel)	2
38	130845	Clamp	4
39	1502053	Clamp (Swivel)	1
40	1486746	Fitting	2
41	1522426	Fitting	1
42	~~6996701~~		
	1487095	Fitting (Swivel Nut Run Tee)	1
43	1486740	Fitting	1
43	~~6992657~~		
	265787	O-Ring	1

DRIVE AXLE BRAKE PLUMBING

HYDROSTATIC TRANSMISSION (→ 3/2023)

ITEM	PART NO.	DESCRIPTION	QTY
44	321487	Clamp	1
45	1543691	Clamp (Swivel)	2
46	4693772	Controller - SC HST	1
47	292507	Capscrew	2

See Service Manual for service procedures.
©2026 HYSTER COMPANY

NOTES

DRIVE AXLE BRAKE PLUMBING (FIGURE 15-12)

HYDROSTATIC TRANSMISSION — PAGE 1 OF 2 (3/2023 ↔ 12/2025)

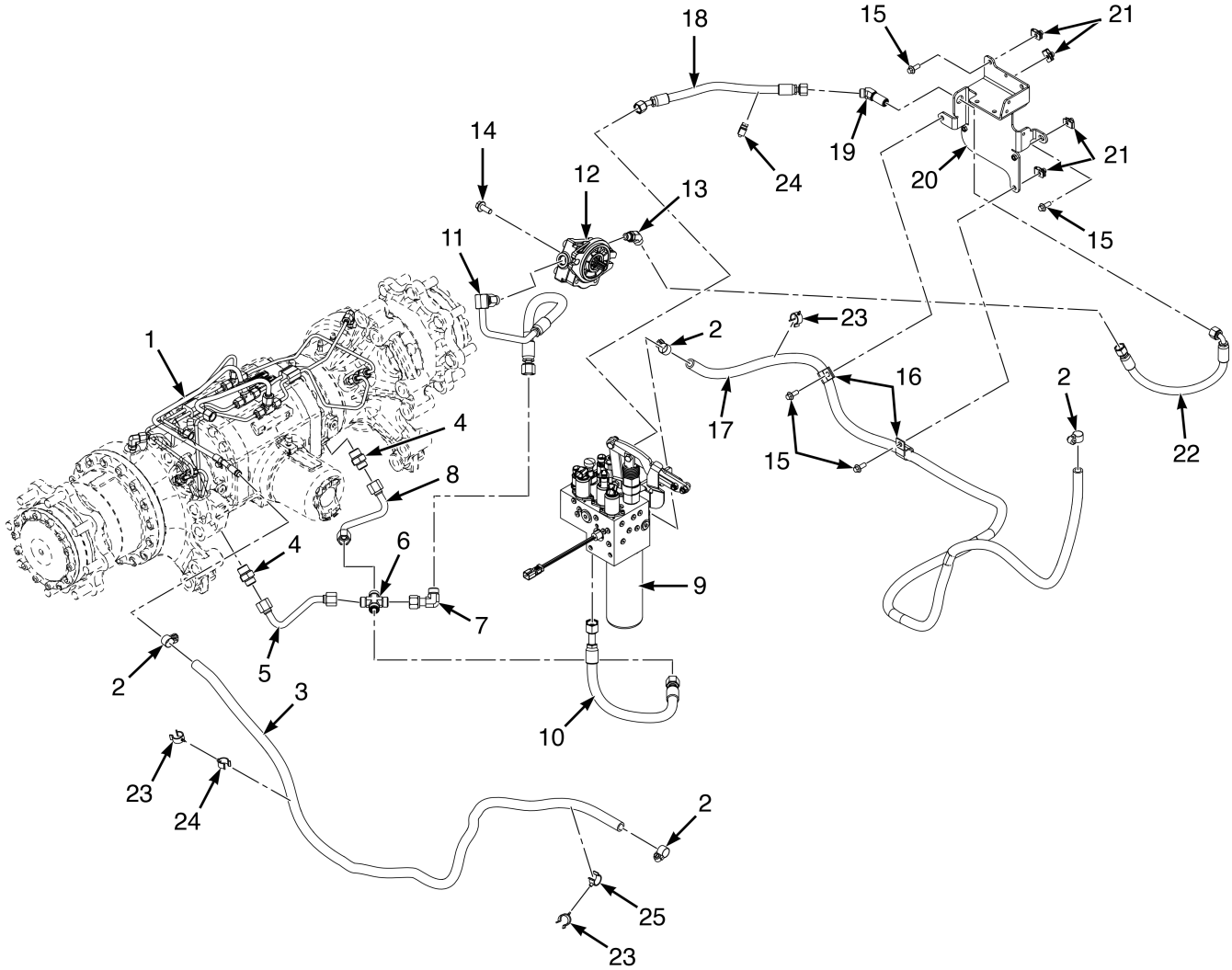

BP040456

©2026 HYSTER COMPANY

DRIVE AXLE BRAKE PLUMBING

HYDROSTATIC TRANSMISSION – PAGE 1 OF 2 (3/2023 ↔ 12/2025)

ITEM	PART NO.	DESCRIPTION	QTY
1	. . . . .	Drive Axle Brake Plumbing page 2 of 2 (☞Figure 15-14)	1
2	166857	Clamp	4
3	4721888	Hose (HST Brake Cool)	1
4	1486746	Fitting	2
5	4720071	Tube Assy (Brake Pump, LH)	1
6	1618505	Fitting (Cross)	1
7	~~6996273~~		
	1486772	Fitting	1
8	4720072	Tube Assy (Brake Pump, RH)	1
9	. . . . .	Autoparking Valve (☞Figure 15-2)	1
10	4718062	Hose Assy - Brake Pump	1
11	4720169	Hose And Tube Assy (HST Brake Pump)	1
12	4695667	Gear Pump - Brake	1
13	1516199	Fitting	1
14	1510117	Capscrew	2
15	1527880	Capscrew	5
16	153069	Clamp	2
17	4721996	Hose (HST Brake Cool)	1
18	4720079	Hose Assy (HST Brake Pump)	1
19	1528587	Fitting	1
20	4343141	Bracket Wldmt (HST Controller)	1
21	1480237	Nut (Foldover)	5
22	4720078	Hose Assy (HST Brake Pump)	1
23	1502066	Clamp (Swivel)	3
24	1502059	Clamp (Swivel)	2
25	1502053	Clamp (Swivel)	1
	a 4693772	Controller - SC HST	1

FOOTNOTES:

a Not Illustrated

DRIVE AXLE BRAKE PLUMBING (FIGURE 15-13)

HYDROSTATIC TRANSMISSION — PAGE 1 OF 2 (12/2025 →)

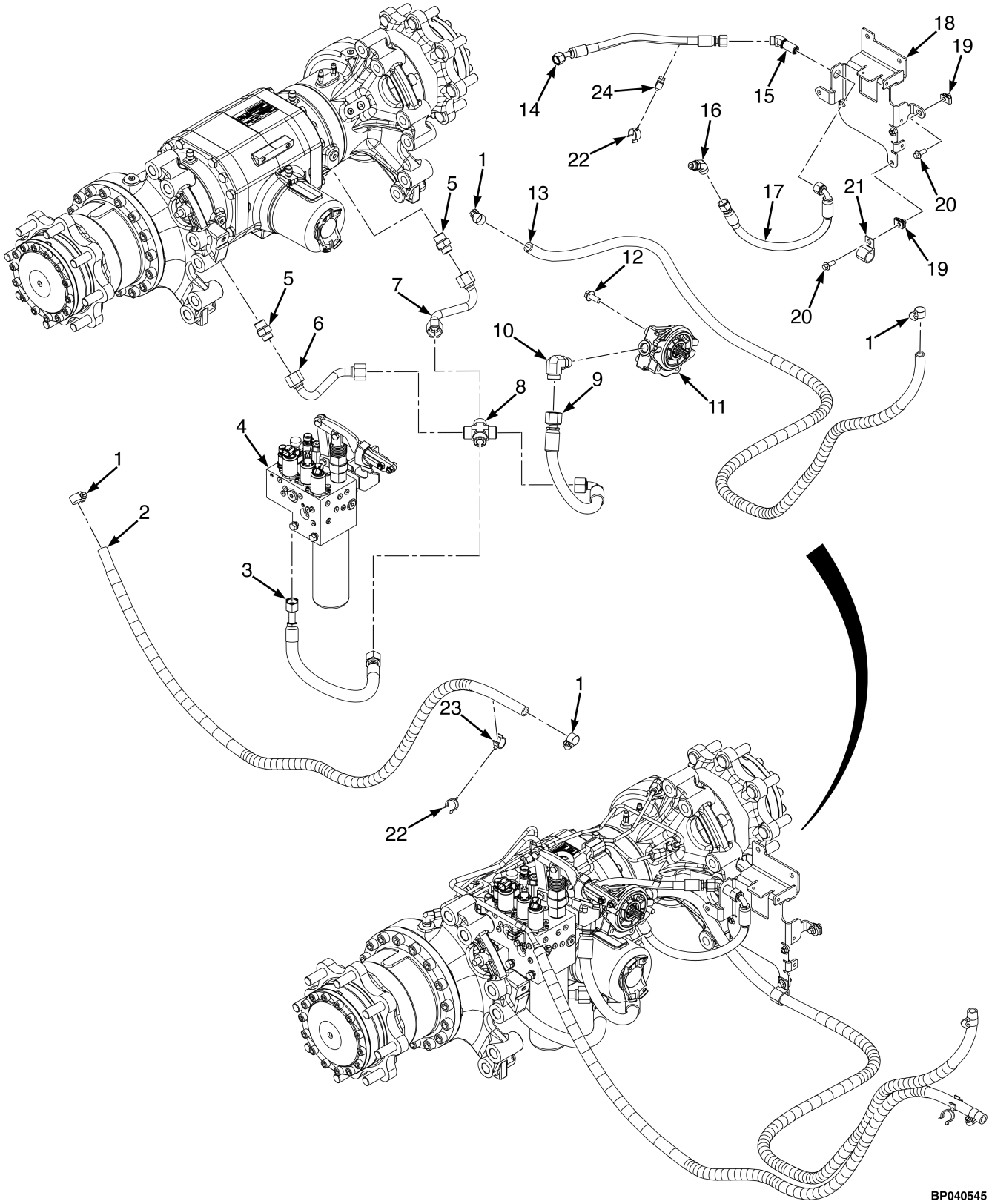

©2026 HYSTER COMPANY

DRIVE AXLE BRAKE PLUMBING

HYDROSTATIC TRANSMISSION – PAGE 1 OF 2 (12/2025 →)

ITEM	PART NO.	DESCRIPTION	QTY
1	166857	Clamp	4
2	4721888	Hose (HST Brake Cool)	1
3	. . . . .	Tube, HST Brake Pump	1
4	. . . . .	Autoparking Valve (☞Figure 15-2)	1
5	1486746	Fitting	2
6	. . . . .	Tube, LH	1
7	. . . . .	Tube, RH	1
8	81056401	Fitting (Cross)	1
8	~~1495114~~		
	252729	O-Ring	4
9	. . . . .	Hose, HST Brake Pump Inlet	1
10	. . . . .	Fitting	1
11	4695667	Gear Pump - Brake	1
12	1510117	Capscrew	2
13	4721996	Hose (HST Brake Cool)	1
14	4720079	Hose Assy (HST Brake Pump)	1
15	1528587	Fitting	1
16	1516199	Fitting	1
17	4720078	Hose Assy (HST Brake Pump)	1
18	4388748	Bracket Wldmt (HST Controller)	1
19	1480237	Nut (Foldover)	5
20	1527880	Capscrew	5
21	153069	Clamp	2
22	1502066	Clamp (Swivel)	2
23	1502053	Clamp (Swivel)	1
24	1502059	Clamp (Swivel)	1
	a 4693772	Controller - SC HST	1

FOOTNOTES:

a Not Illustrated

DRIVE AXLE BRAKE PLUMBING (FIGURE 15-14)

HYDROSTATIC TRANSMISSION — PAGE 2 OF 2 (3/2023 ↔ 12/2025)

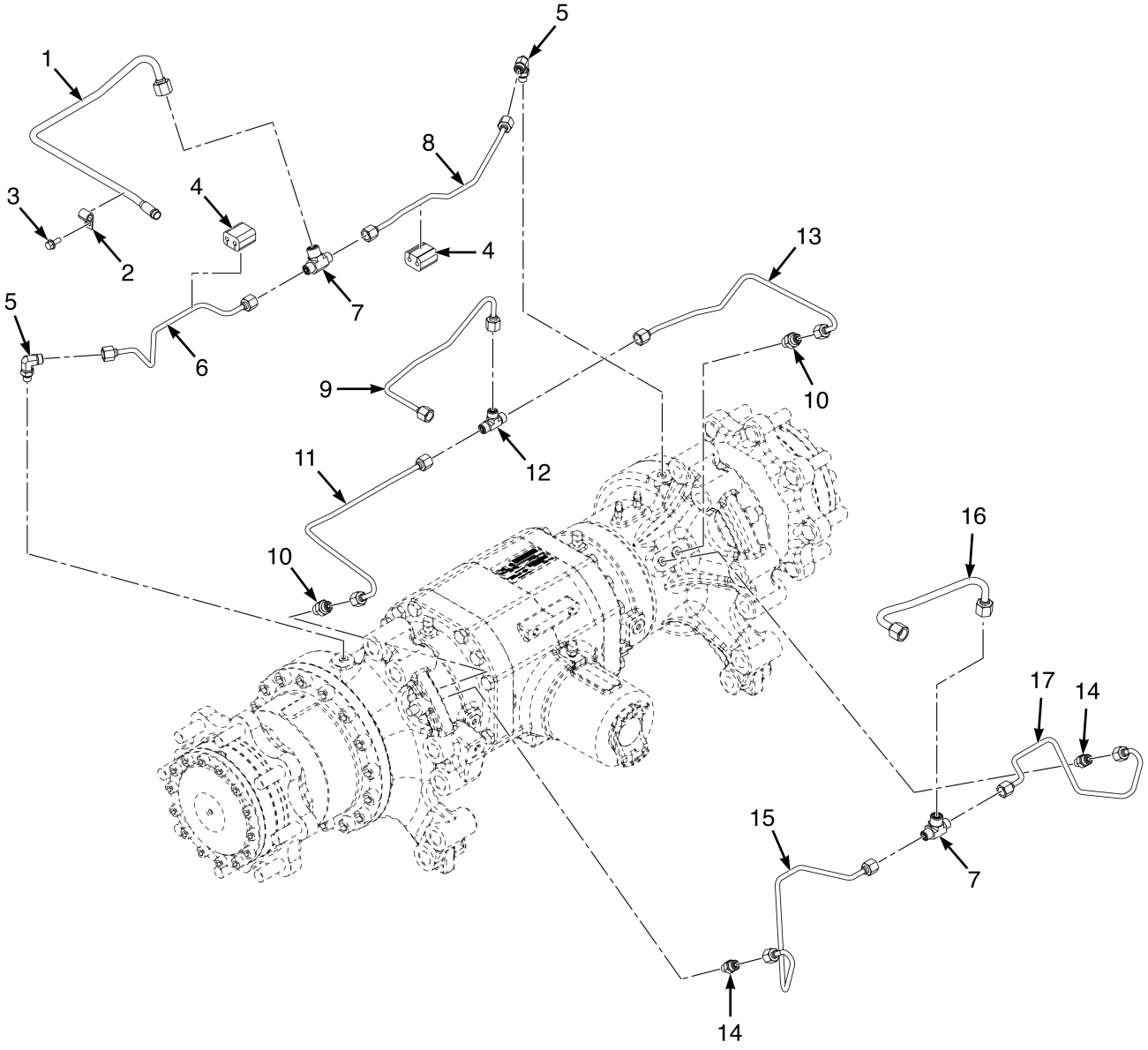

©2026 HYSTER COMPANY

DRIVE AXLE BRAKE PLUMBING

HYDROSTATIC TRANSMISSION – PAGE 2 OF 2 (3/2023 ↔ 12/2025)

ITEM	PART NO.	DESCRIPTION	QTY
1	4706648	Tube Assy - Cooling	1
2	132131	Clamp	1
3	~~4111055~~		
	1527876	Capscrew	1
4	4706652	Block - Mounting, Brake Tubes	2
5	1487058	Fitting	2
6	4706644	Tube Assy - Cooling	1
7	4270250	T-Fitting	2
8	4706645	Tube Assy - Cooling	1
9	4706647	Tube Assy	1
10	1486738	Fitting	2
11	4706643	Tube Assy - Service Brake (LH)	1
12	1522424	Fitting	1
13	4706642	Tube Assy - Service Brake (RH)	1
14	1486737	Fitting	2
15	4706640	Tube Assy	1
16	4706646	Tube Assy	1
17	4706641	Tube Assy	1

©2026 HYSTER COMPANY

DRIVE AXLE BRAKE PLUMBING (FIGURE 15-15)

HYDROSTATIC TRANSMISSION — PAGE 2 OF 2 (12/2025 →)

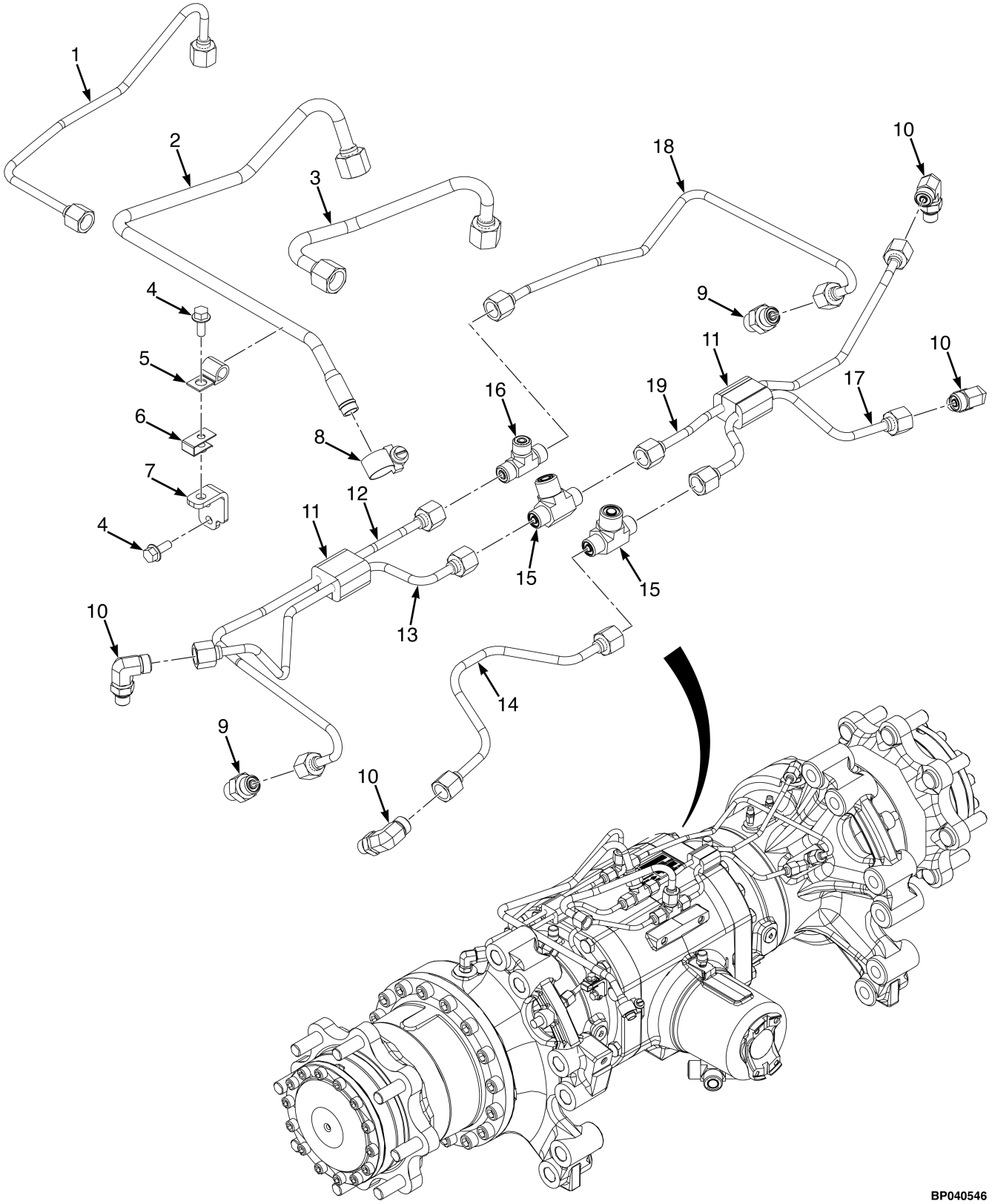

©2026 HYSTER COMPANY

DRIVE AXLE BRAKE PLUMBING

HYDROSTATIC TRANSMISSION – PAGE 2 OF 2 (12/2025 →)

ITEM	PART NO.	DESCRIPTION	QTY
1	4706647	Tube Assy (Top)	1
2	81024336	Tube Assy	1
3	4706646	Tube Assy	1
4	~~4111055~~		
	1527876	Capscrew	2
5	132131	Clamp	1
6	1350215	Nut (Foldover)	1
7	. . . . .	Bracket, HST Cooling	1
8	166857	Clamp	4
9	1486738	Fitting	2
10	1487058	Fitting	4
11	4706652	Block - Mounting, Brake Tubes	1
12	4706643	Tube Assy - Service Brake (LH)	1
13	4706644	Tube Assy - Cooling (LH)	1
14	4399473	Tube Assy (LH)	1
15	4270250	T-Fitting	2
16	1522424	Fitting	1
17	4399474	Tube Assy (RH)	1
18	4706642	Tube Assy - Service Brake (RH)	1
19	4706645	Tube Assy - Cooling (RH)	1

©2026 HYSTER COMPANY

PARKING BRAKE LEVER (FIGURE 15-16)

DRY BRAKE (→ 2/2022)

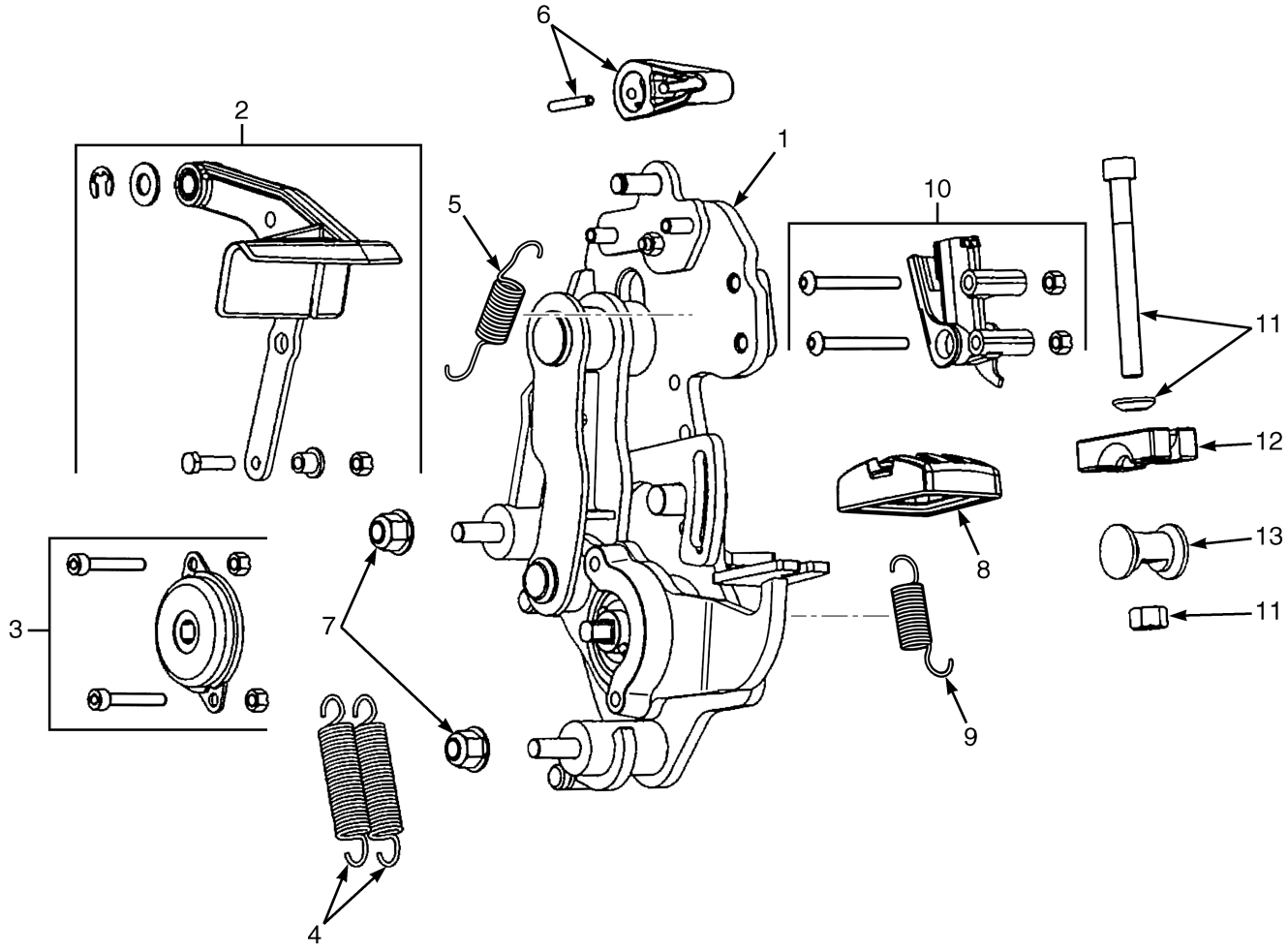

©2026 HYSTER COMPANY

KEY:
A: => 3/2021
B: 3/2021 =>

ITEM	PART NO.	DESCRIPTION	QTY A	QTY B
	b 4694691	Parking Brake Lever	1	..
1	**c e** 4711386	Parking Brake Lever	..	1
1	**a f** 4713027	Parking Brake Lever	..	1
1	**d** 4716034	Parking Brake Lever	..	1
2	4299150	Kit-Handle	1	..
3	4299151	Kit - Speed Limiter	1	..
4	4299152	Kit - Pedal Spring	1	..
5	4299154	Spring	1	..
6	4299155	Kit - Sensor Actuator	1	..
7	4299153	Kit - Mounting Nut	1	..
8	4299157	Pad (Pedal)	1	..
9	4299158	Spring	1	..
10	4299156	Kit-Sensor	1	..
11	4299159	Kit - Cable Lifter	1	..
12	4299160	Bar (Adjuster)	1	..
13	4299161	Nut , Barrel	1	..
	d 4339794	Kit - Parking Brake Lever	..	1

FOOTNOTES:

a → 11/2021
b → 3/2021
c → 6/2021
d 11/2021 →
e 3/2021 →
f 6/2021 →

PARKING BRAKE LEVER (FIGURE 15-17)

DRY BRAKE (2/2022 →)

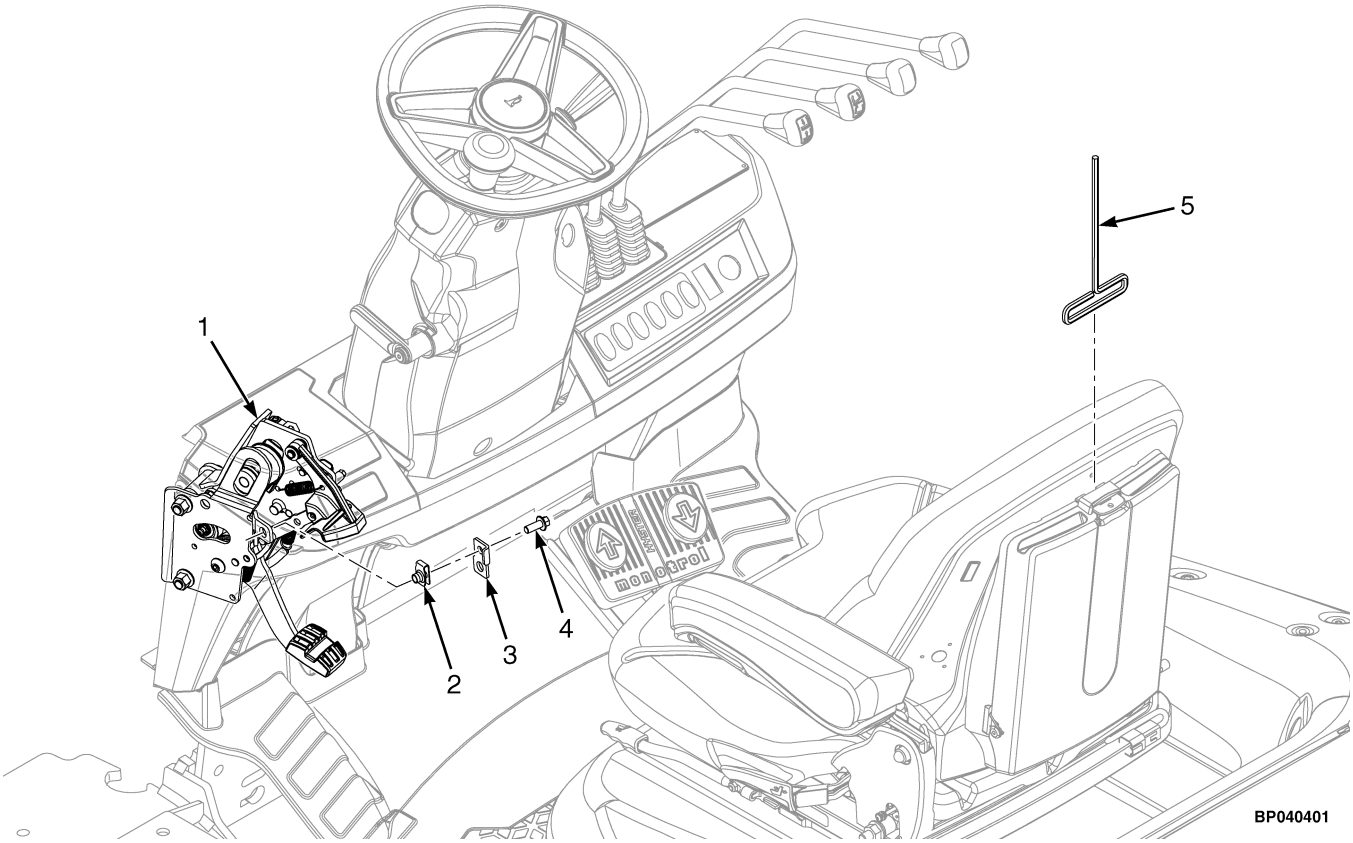

ITEM	PART NO.	DESCRIPTION	QTY
1	4715615	Parking Brake Lever (☞Figure 15-18)	1
1	4729912	Parking Brake Lever (Alternate Part)	1
2	1480237	Nut (Foldover)	1
3	4336517	Bracket (Resevoir Bottle Adapter)	1
4	1527880	Capscrew	1
5	**a** 4329768	Tool (Hex Key)	1

FOOTNOTES:

a Keep in Document Box behind Seat Back Rest.

©2026 HYSTER COMPANY

PARKING BRAKE LEVER (FIGURE 15-18)

ASSEMBLY (2/2022 ↔ 9/2023)

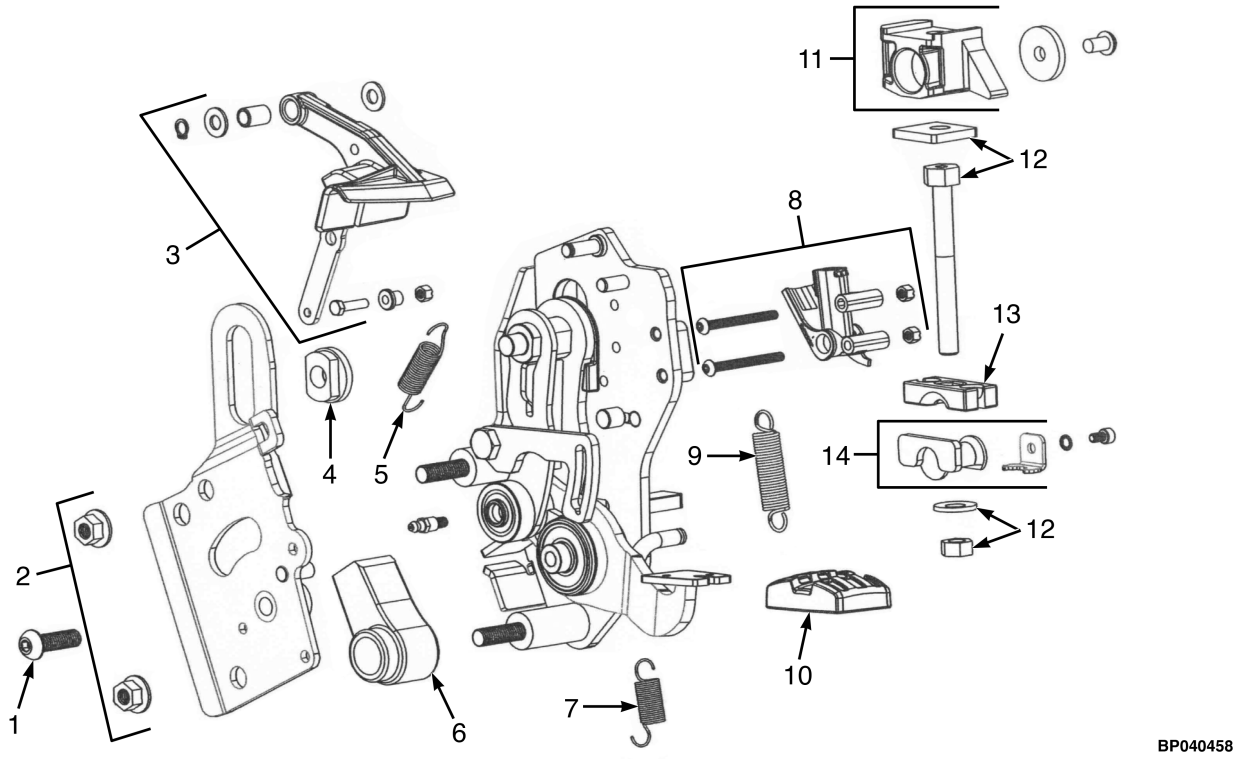

ITEM	PART NO.	DESCRIPTION	QTY
	4715615	Parking Brake Lever (Assembly)	1
	4729912	Parking Brake Lever (Alternate Part)	1
1	4363502	Kit-Screw	1
2	4363503	Kit-Nut	1
3	4363504	Kit-Handle	1
4	4363505	Kit-Washer	1
5	4363506	Kit-Spring (Handle)	1
6	4363507	Kit-Damper	1
7	4363508	Kit-Spring (Keeper)	1
8	4363509	Kit-Sensor	1
9	4363510	Kit-Spring (Pedal)	1
10	4363511	Kit (Pedal Pad)	1
11	4363512	Kit (Sensor Actuator)	1
12	4363513	Kit (Cable Lifter)	1
13	4363514	Kit (Adjuster Bar)	1
14	4363515	Kit-Nut (Barrel)	1

PARKING BRAKE LEVER (FIGURE 15-19)

ASSEMBLY (9/2023 →)

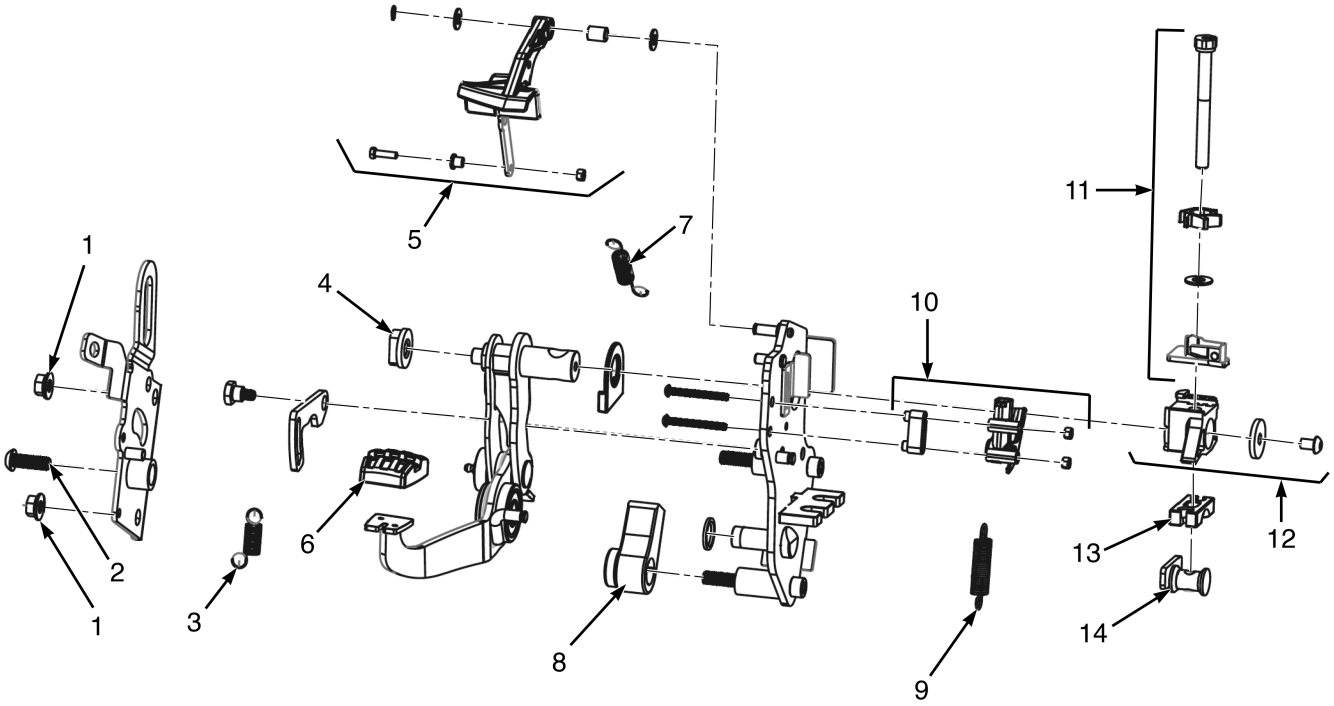

BP040505

©2026 HYSTER COMPANY

PARKING BRAKE LEVER

ASSEMBLY (9/2023 →)

ITEM	PART NO.	DESCRIPTION	QTY
	4721150	Parking Brake Lever	1
1	4390793	Kit (Mounting Nut)	1
2	4390792	Kit (Side Plate Screw)	1
3	4390798	Kit (Keeper Spring)	1
4	4390795	Kit (Sliding Washer)	1
5	4390794	Kit-Handle	1
6	4390801	Kit (Pedal Pad)	1
7	4390796	Kit (Handle Spring)	1
8	4390797	Kit-Damper	1
9	4390800	Kit (Pedal Spring)	1
10	4390799	Kit-Sensor	1
11	4390803	Kit (Cable Lifter)	1
12	4390802	Kit-Sensor (Actuator)	1
13	4390804	Kit (Adjuster Bar)	1
14	4390805	Kit (Barrel Nut)	1

©2026 HYSTER COMPANY

PARKING BRAKE VALVE (FIGURE 15-20)
ASSEMBLY — POWERSHIFT TRANSMISSION

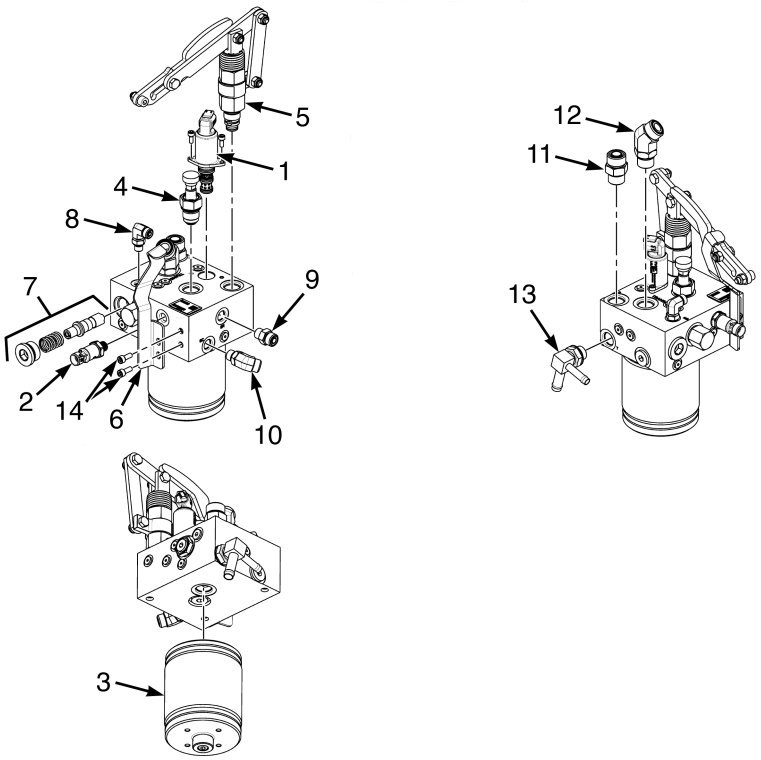

BP040477

ITEM	PART NO.	DESCRIPTION	QTY
	4353570	Parking Brake Valve (Assembly)	1
1	4282122	Cartridge	1
2	4286951	Sensor (Pressure)	1
3	4349034	Accumulator	1
4	4286952	BY-Pass Valve - Manual Release	1
5	. . . . .	Hand Pump	1
6	. . . . .	Bracket	1
7	4349037	Kit-Spool	1
8	. . . . .	Fitting, 90deg	1
9	. . . . .	Fitting, Straight	1
10	. . . . .	Fitting, 45deg	1
11	. . . . .	Fitting, Straight	1
12	. . . . .	Fitting, 45deg	1
13	. . . . .	Fitting	1
14	. . . . .	Screw	2
	. . . . .	4371579 (5 and 6)	1
	. . . . .	4349038 (8 thru 13)	1
	4371579	Kit (Hand Pump)	1
	4349038	Kit (Fittings)	1

See Service Manual for service procedures.
©2026 HYSTER COMPANY

PARKING BRAKE VALVE (FIGURE 15-21)
ASSEMBLY — HYDROSTATIC TRANSMISSION

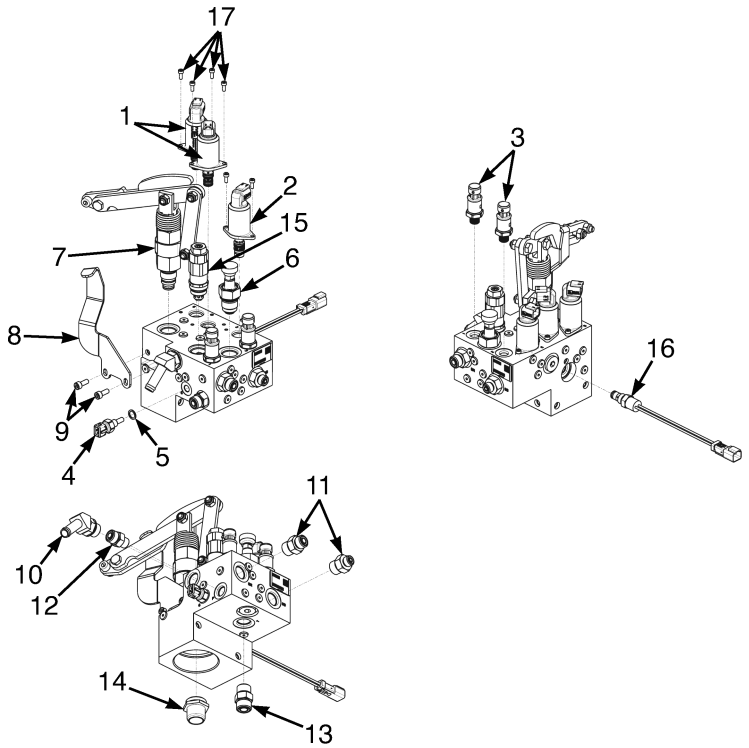

BP040478

ITEM	PART NO.	DESCRIPTION	QTY
	4325530	Brake Valve (HST)	1
1	4286954	Solenoid - F01 HST	1
1	81029079	Solenoid (Alternate Part)	1
2	4370661	Solenoid	1
3	4286951	Sensor (Pressure)	2
4	4286956	Sensor - Temperature HST	1
5	4370662	Washer (Compression)	1
6	4286952	BY-Pass Valve - Manual Release	1
7	. . . . .	Hand Pump	1
8	. . . . .	Bracket	1
9	. . . . .	Screw	2
10	171007	Fitting	1
10	16484	O-Ring	1
11	1486739	Fitting	2
12	1486740	Fitting	1
12	~~6992657~~		
	265787	O-Ring	1
13	~~6996681~~		
	1473887	Fitting	1
13	~~1495113~~		
	265731	O-Ring	1
14	4370666	Adapter	1
15	4370664	Relief Valve	1
16	4370665	Pressure Switch	1
17	. . . . .	Screw	4

ITEM	PART NO.	DESCRIPTION	QTY
	4287082	Kit - Fitting	1
	4370663	Kit (Hand Pump)	1
	81029080	Kit (Hand Pump) (Alternate Part)	1

©2026 HYSTER COMPANY

Q-CURRENT SWITCH (FIGURE 15-22)

PARKING BRAKE — DRY BRAKE

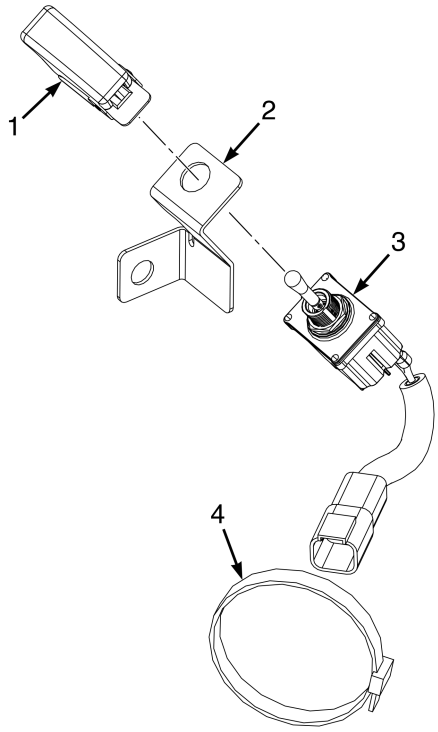

BP040501

ITEM	PART NO.	DESCRIPTION	QTY
1	4377051	Cover (Switch)	1
2	**a** 4376943	Bracket (Q-Current)	1
3	4376952	Switch (Q-Current)	1
4	129563	Strap Clamp	1

FOOTNOTES:

a Mounts to hardware used on Brake Fluid Reservoir

NOTES

©2026 HYSTER COMPANY

SECTION 16
HYDRAULIC SYSTEM

DESCRIPTION **PAGE**

HYDRAULIC CONTROL VALVE ASSEMBLY
FAN DRIVE SECTION WITH VDP, WITH HFD - MANUAL HYDRAULICS 16-60
FAN DRIVE SECTION WITH VDP, WITH HFD - ELECTRONIC HYDRAULICS 16-67
INLET SECTION - MANUAL HYDRAULICS 16-46
INLET SECTION - ELECTRONIC HYDRAULICS 16-47
INLET SECTION WITH VDP, WITH HFD - MANUAL HYDRAULICS 16-59
LIFT AND LOWER SECTION - MANUAL HYDRAULICS 16-51
LIFT SECTION - ELECTRONIC HYDRAULICS 16-52
LIFT SECTION WITH VDP, WITH HFD - MANUAL HYDRAULICS 16-61
MANUAL AND ELECTRONIC HYDRAULICS - H40A-H50A (→ 10/2022) 16-34
MANUAL AND ELECTRONIC HYDRAULICS - H40A-H50A (11/2022 →) 16-38
MANUAL AND ELECTRONIC HYDRAULICS - H60A-H70A (→ 10/2022) 16-40
MANUAL AND ELECTRONIC HYDRAULICS - H60A-H70A (11/2022 →) 16-44
OUTLET SECTION - MANUAL AND ELECTRONIC HYDRAULICS 16-54
TILT AND AUXILIARY SECTION - MANUAL HYDRAULICS 16-48
TILT AND AUXILIARY SECTION - ELECTRONIC HYDRAULICS 16-49
TILT SECTION WITH VDP - MANUAL HYDRAULICS 16-50
WITH VDP, WITH HFD - MANUAL HYDRAULICS (→ 10/2022) 16-55
WITH VDP, WITH HFD - MANUAL HYDRAULICS (11/2022 →) 16-57
WITH VDP, WITH HFD - ELECTRONIC HYDRAULICS (→ 10/2022) 16-63
WITH VDP, WITH HFD - ELECTRONIC HYDRAULICS (11/2022 →) 16-65
HYDRAULIC FAN DRIVE
HOSE ARRANGEMENT - PST 16-120
HOSE ARRANGEMENT - HST 16-122
HYDRAULIC FILTER
SERVICE PARTS (11/2021 →) 16-31
HYDRAULIC FILTER ASSEMBLY
→ 11/2021 16-30
HYDRAULIC HOSES
HOIST AND AUXILIARY - 3FFL AND 2LFL 16-68
HOIST AND AUXILIARY - 2FFL 16-70
HYDRAULIC LEVERS
WITH RTST WITHOUT DSS, WITH RTST AND DSS, WITH DSS WITHOUT RTST - 2 FUNCTION 16-108
WITH RTST WITHOUT DSS, WITH RTST AND DSS, WITH DSS WITHOUT RTST - 3 FUNCTION 16-110
WITH RTST WITHOUT DSS, WITH RTST AND DSS, WITH DSS WITHOUT RTST - 3 FUNCTION WITH DETENT 16-112
WITH RTST WITHOUT DSS, WITH RTST AND DSS, WITH DSS WITHOUT RTST - 4 FUNCTION 16-115
WITH RTST WITHOUT DSS, WITH RTST AND DSS, WITH DSS WITHOUT RTST - 4 FUNCTION WITH DETENT 16-117
WITHOUT RTST OR DSS - 3 FUNCTION WITHOUT DETENT 16-100
WITHOUT RTST OR DSS - 4 FUNCTION WITHOUT DETENT 16-102
WITHOUT RTST OR DSS - 3 FUNCTION WITH DETENT 16-104
WITHOUT RTST OR DSS - 4 FUNCTION WITH DETENT 16-106
HYDRAULIC OIL COOLER 16-4
HYDRAULIC OIL COOLER PLUMBING
WITH GEAR PUMP 16-6
WITH VDP 16-8
HYDRAULIC PISTON PUMP
HYDROSTATIC TRANSMISSION 16-126

©2026 HYSTER COMPANY

SECTION 16
HYDRAULIC SYSTEM

DESCRIPTION **PAGE**

POWERSHIFT TRANSMISSION 16-124
HYDRAULIC SUPPLY AND RETURN
DIESEL - GEAR PUMP 16-10
DIESEL - PISTON PUMP 16-18
HYDROSTATIC TRANSMISSION (→ 8/2024) 16-24
HYDROSTATIC TRANSMISSION (8/2024 →) 16-28
LPG/BI-FUEL - GEAR PUMP 16-14
LPG/BI-FUEL - PISTON PUMP 16-21
MAST AND TILT CYLINDER INSTALLATION 16-127
PILOT PRESSURE ACCUMULATOR
HYDRAULIC SYSTEM - WITH VDP, WITHOUT HFD 16-32
HYDRAULIC SYSTEM - WITH VDP, WITH HFD 16-33
STEER HYDRAULICS 16-80
HST 16-84
TILT CYLINDERS 16-72
TILT HYDRAULICS
WITH RTST 16-76
WITHOUT RTST 16-74
WITHOUT RTST - HST 16-78
TRANSMISSION COOLING
HYDROSTATIC TRANSMISSION (→ 10/2022) 16-96
HYDROSTATIC TRANSMISSION (10/2022 →) 16-98
POWERSHIFT - WITH AIR CONDITIONING 16-86
POWERSHIFT - WITH AIR CONDITIONING (ALTERNATE CONFIGURATION) 16-88
POWERSHIFT - WITHOUT AIR CONDITIONING (→ 6/2021) 16-90
POWERSHIFT - WITHOUT AIR CONDITIONING (6/2021 →) 16-92

©2026 HYSTER COMPANY

NOTES

HYDRAULIC OIL COOLER (FIGURE 16-1)

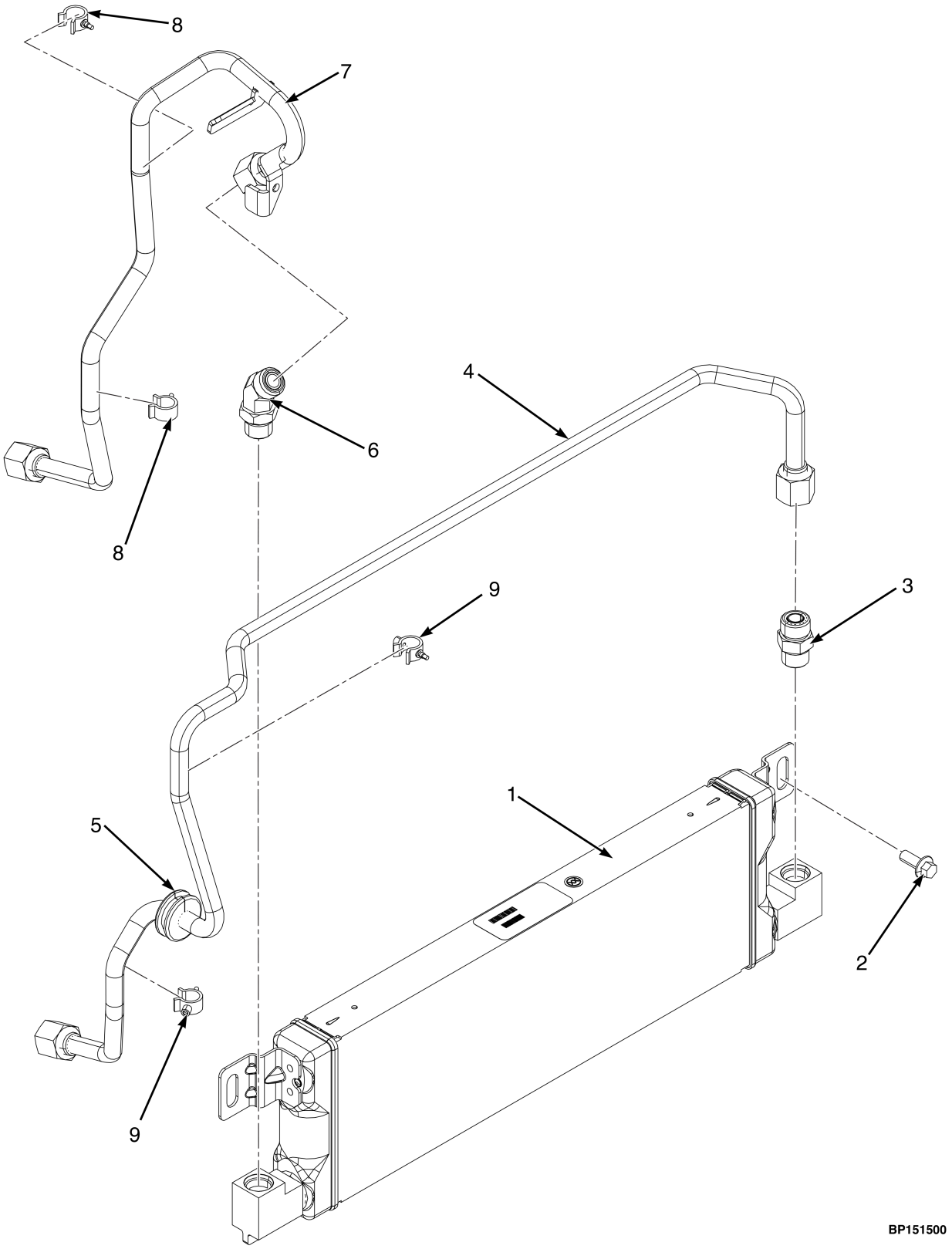

©2026 HYSTER COMPANY

HYDRAULIC OIL COOLER

ITEM	PART NO.	DESCRIPTION	QTY
1	4707559	Cooler - Hydraulic Oil	1
2	1527880	Capscrew	2
2	~~4109993~~		
	1527879	Capscrew (Alternate Part)	2
3	~~6996681~~		
	1473887	Fitting	1
3	~~1495113~~		
	265731	O-Ring	1
4	4711760	Tube Assy - Hyd Oil Cooler Return (2 Row Radiator)	1
4	4707062	Tube Assy - Hyd Oil Cooler Return (3 Row Radiator)	1
5	339969	Grommet	1
6	1516202	Fitting (2 Row Radiator)	1
6	~~6996681~~		
	1473887	Fitting (3 Row Radiator)	1
6	~~1495113~~		
	265731	O-Ring (3 Row Radiator)	1
7	4711761	Tube - Hyd Oil Cooler Supply (2 Row Radiator)	1
7	4707063	Tube - Hyd Oil Cooler Supply (3 Row Radiator)	1
8	1502055	Clamp (Swivel)	2
9	1542439	Clamp (Swivel)	2

©2026 HYSTER COMPANY

HYDRAULIC OIL COOLER PLUMBING (FIGURE 16-2)
WITH GEAR PUMP

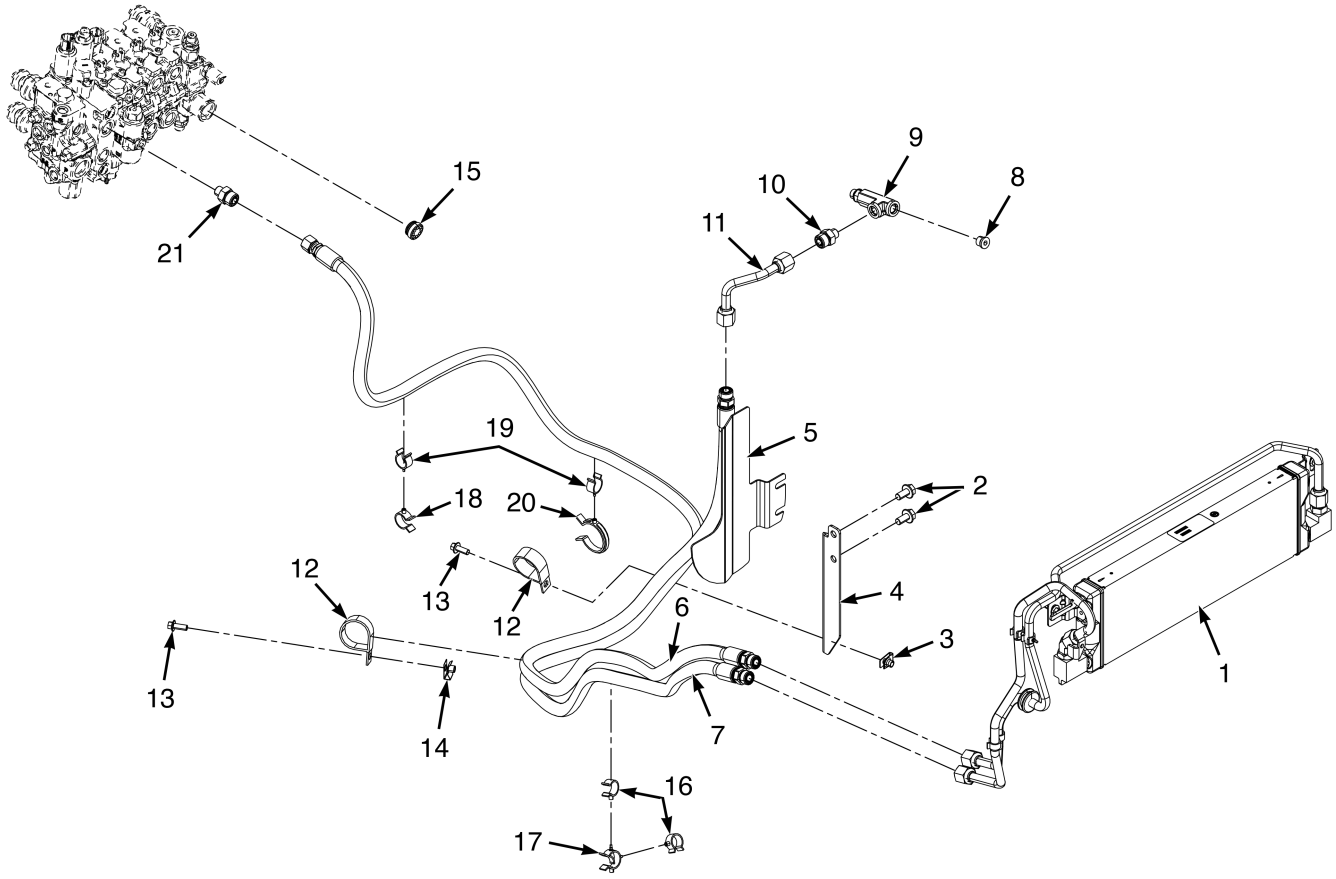

BP151501

©2026 HYSTER COMPANY

HYDRAULIC OIL COOLER PLUMBING
WITH GEAR PUMP

KEY:
A: Cert Diesel
B: LPG and Non Cert Diesel

ITEM	PART NO.	DESCRIPTION	QTY A	QTY B
1	. . . . .	Hydraulic Oil Cooler (☞Figure 16-1)	1	1
2	1527883	Capscrew	2	2
3	1480237	Nut (Foldover)	1	1
4	4268955	Bracket	1	1
5	4318686	Heat Shield (DPF)	1	..
6	**b** 4707955	Hose Assy - Hyd Oil Cooler Return	1	..
6	**d** 4723689	Hose Assy - Hyd Oil Cooler Return	1	..
6	**f** 4729265	Hose Assy - Hyd Oil Cooler Return	1	..
6	**b** 4707956	Hose Assy - Hyd Oil Cooler Return	..	1
6	**d** 4723690	Hose Assy - Hyd Oil Cooler Return	..	1
6	**f** 4729266	Hose Assy - Hyd Oil Cooler Return	..	1
7	**b** 4707954	Hose Assy - Hyd Oil Cooler Supply	1	1
7	**d** 4723688	Hose Assy - Hyd Oil Cooler Supply	1	1
7	**f** 4729072	Hose Assy - Hyd Oil Cooler Supply	1	1
8	~~1579809~~			
	222443	Fitting	1	1
8	16483	O-Ring	1	1
9	4323129	T-Fitting	1	..
9	4323128	T-Fitting	..	1
10	~~6996682~~			
	1486745	Fitting	1	1
11	4713638	Tube Assy - Hyd Oil Cooler Return	1	..
12	335047	Clamp	2	2
12	**c** 4121575	Clamp (Alternate Part)	2	2
12	**e** 4121575	Clamp	1	1
13	**c** 1527880	Capscrew	2	2
13	**e** 1527880	Capscrew	1	1
14	**c** 1398062	Nut (Fold Over)	1	1
15	4322856	Check Valve	1	1
16	1502053	Clamp (Swivel)	2	2
17	4078947	Clamp (Swivel)	1	1
18	1502054	Clamp (Swivel)	1	1
19	1502066	Clamp (Swivel)	2	2
20	4166547	Clamp (Swivel)	1	1
21	**a** ~~6996682~~			
	1486745	Fitting	1	1
21	**f** 1486740	Fitting	1	1

FOOTNOTES:

a → 1/2023
b → 7/2022
c → 9/2025
d 7/2022 ↔ 1/2023
e 9/2025 →
f 1/2023 →

HYDRAULIC OIL COOLER PLUMBING (FIGURE 16-3)
WITH VDP

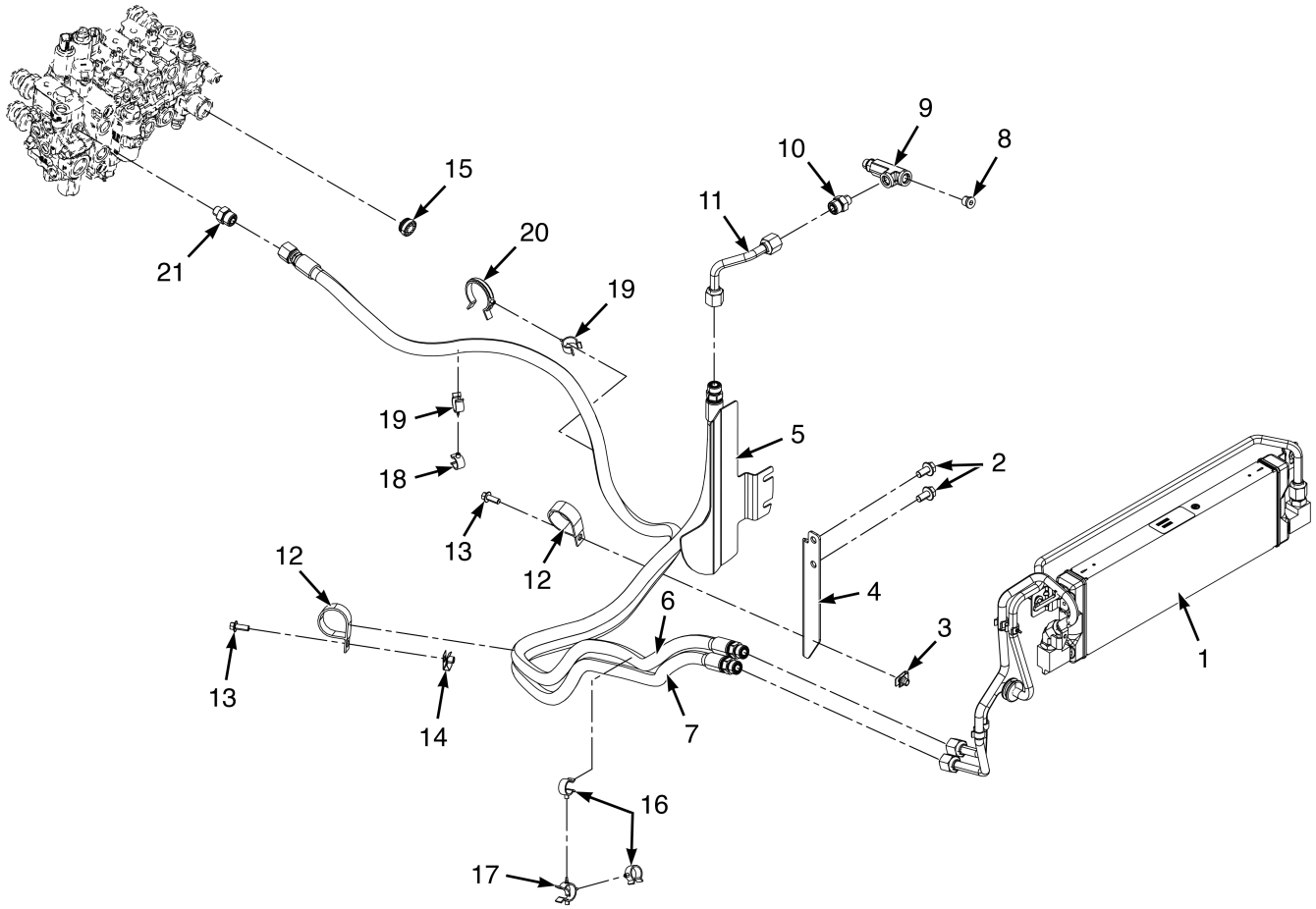

BP151499

©2026 HYSTER COMPANY

HYDRAULIC OIL COOLER PLUMBING
WITH VDP

KEY:
A: Cert Diesel
B: LPG and Non Cert Diesel

ITEM	PART NO.	DESCRIPTION	QTY A	QTY B
1	. . . . .	Hyd Oil Cooler Assembly (☞Figure 16-1)	1	1
2	1527883	Capscrew	2	2
3	1480237	Nut (Foldover)	1	1
4	4268955	Bracket	1	1
5	4318686	Heat Shield (DPF)	1	..
6	4723689	Hose Assy - Hyd Oil Cooler Return	1	..
6	4729265	Hose Assy - Hyd Oil Cooler Return (Alternate Part)	1	..
6	4723690	Hose Assy - Hyd Oil Cooler Return	..	1
6	4729266	Hose Assy - Hyd Oil Cooler Return (Alternate Part)	..	1
7	4723691	Hose Assy - Hyd Oil Cooler Supply	1	..
7	4729073	Hose Assy - Hyd Oil Cooler Supply (Alternate Part)	1	..
7	4723692	Hose Assy - Hyd Oil Cooler Supply	..	1
7	4729074	Hose Assy - Hyd Oil Cooler Supply (Alternate Part)	..	1
8	~~1579809~~			
	222443	Fitting	1	1
8	16483	O-Ring	1	1
9	4323129	T-Fitting	1	..
9	4323128	T-Fitting	..	1
10	~~6996682~~			
	1486745	Fitting	1	1
11	4713638	Tube Assy - Hyd Oil Cooler Return	1	..
11	4713639	Tube Assy - Hyd Oil Cooler Return	..	1
12	335047	Clamp	2	2
12	**a** 4121575	Clamp (Alternate Part)	2	2
12	**b** 4121575	Clamp	1	1
13	**a** 1527880	Capscrew	2	2
13	**b** 1527880	Capscrew	1	1
14	**a** 1398062	Nut (Fold Over)	1	1
15	4322856	Check Valve	1	1
16	1502053	Clamp (Swivel)	2	2
17	4078947	Clamp (Swivel)	1	1
18	1606544	Clamp (Swivel)	1	1
19	1502066	Clamp (Swivel)	2	2
20	4166547	Clamp (Swivel)	1	2
21	~~6996682~~			
	1486745	Fitting	1	1
21	1486740	Fitting (Alternate Part)	1	1

FOOTNOTES:

a → 9/2025

b 9/2025 →

HYDRAULIC SUPPLY AND RETURN (FIGURE 16-4)

DIESEL — GEAR PUMP

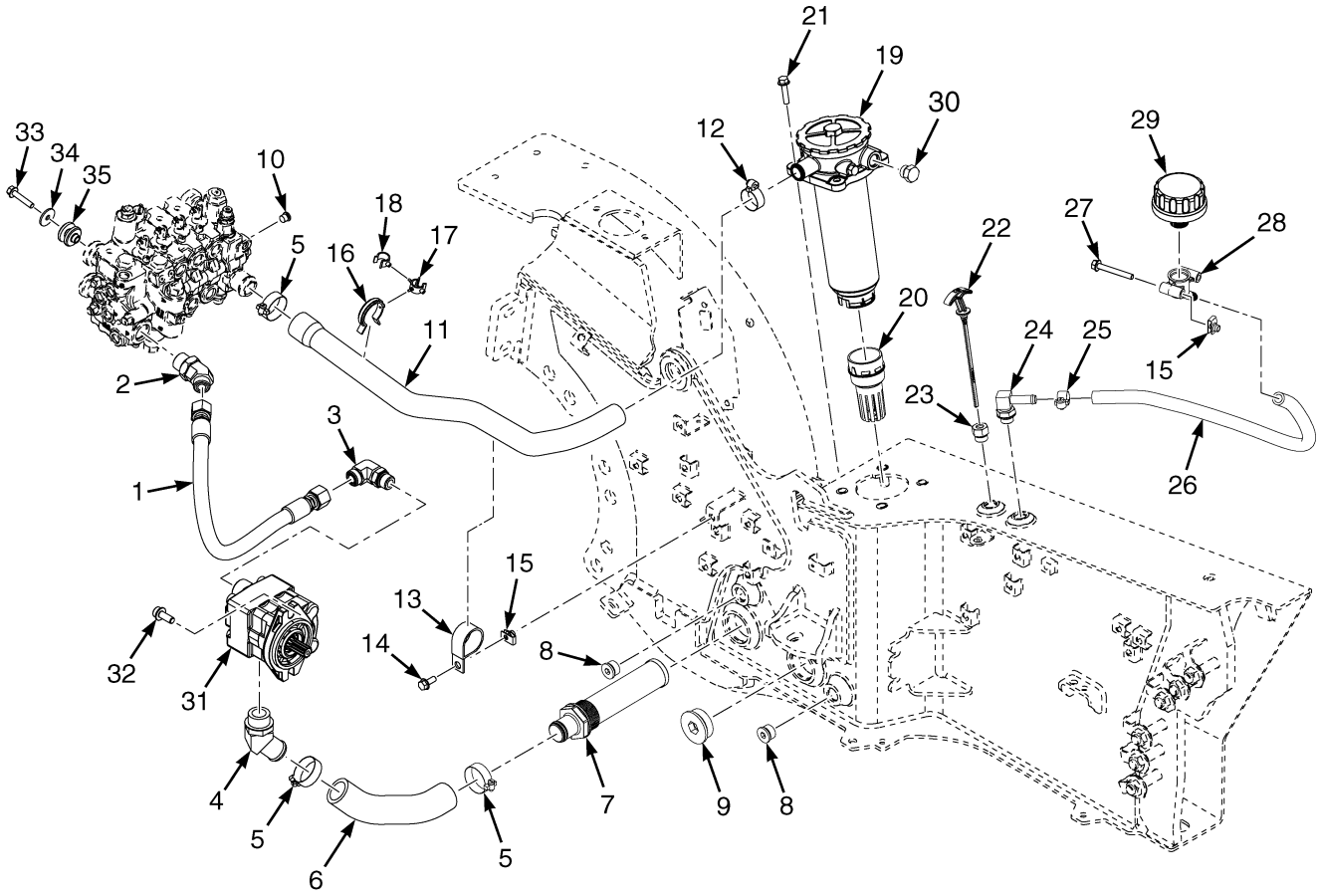

©2026 HYSTER COMPANY

HYDRAULIC SUPPLY AND RETURN
DIESEL – GEAR PUMP

ITEM	PART NO.	DESCRIPTION	QTY
1	4698343	Hose Assy	1
2	1516207	Fitting	1
3	1487067	Fitting	1
4	134173	Fitting	1
4	16487	O-Ring	1
5	127045	Clamp (Hose)	3
6	4682718	Hose (Suction)	1
6	4683941	Hose - Tank Suction (Non-Cert)	1
7	4674953	Strainer (Suction)	1
8	233693	Fitting	2
8	16485	O-Ring	1
9	222445	Plug	1
9	16984	O-Ring	1
10	222442	Fitting Assembly	1
10	204128	Plug	1
10	16481	O-Ring	1
11	4694067	Hose - Return Line, 4 function, Diesel	1
12	2306118	Clamp	1
13	258590	Clamp	1
14	1527880	Capscrew	1
14	1510113	Capscrew (Alternate Part)	1
15	1480237	Nut (Foldover)	3
16	4166547	Clamp (Swivel)	1
17	1502057	Clamp	1
18	1606544	Clamp (Swivel)	1
19	4242219	Hydraulic Filter - Housing Assembly (☞Figure 16-10)	1
19	**b** 4326837	Hydraulic Filter (Assembly) (Alternate Part) (☞Figure 16-10)	1
19	**c** 4326838	Hydraulic Filter (Assembly) (Fliter Not Inlcuded) (☞Figure 16-11)	1
20	4683102	Diffuser - Short	1
21	1528482	Capscrew	4
22	4682555	Dipstick	1
23	4255013	Fitting - Dispstick Holder	1
24	222510	Fitting (Cert Dsl)	1
24	222502	Fitting (Non Cert Dsl)	1
24	16484	O-Ring	1
25	130845	Clamp	2
26	4682673	Hose - Breather	1
26	1582161	Breather (Optional)	1
26	~~1450764~~		
	16486	O-Ring (For Optional Breather)	1
27	1510115	Capscrew	2
28	4215552	Adapter - Breather	1
29	4246193	Breather	1
30	14595	Plug Assembly	1
31	4699507	Gear Pump - 29.3 CC/Rev	1
31	4281596	Kit-Seal	1
32	1564515	Capscrew	2
33	1510114	Capscrew	3
34	1346752	Washer	3
35	4683160	Isolator	3

©2026 HYSTER COMPANY

HYDRAULIC SUPPLY AND RETURN

DIESEL – GEAR PUMP

ITEM	PART NO.	DESCRIPTION	QTY
	a 4733832	Hose Guard - Spiral Wrap, Hyd Supply Hose	1
	a 4261701	Kit-Filter Element (Hyd Filter)	1

FOOTNOTES:

a Not Illustrated
b → 11/2021
c 11/2021 →

©2026 HYSTER COMPANY

NOTES

HYDRAULIC SUPPLY AND RETURN (FIGURE 16-5)

LPG/BI-FUEL — GEAR PUMP

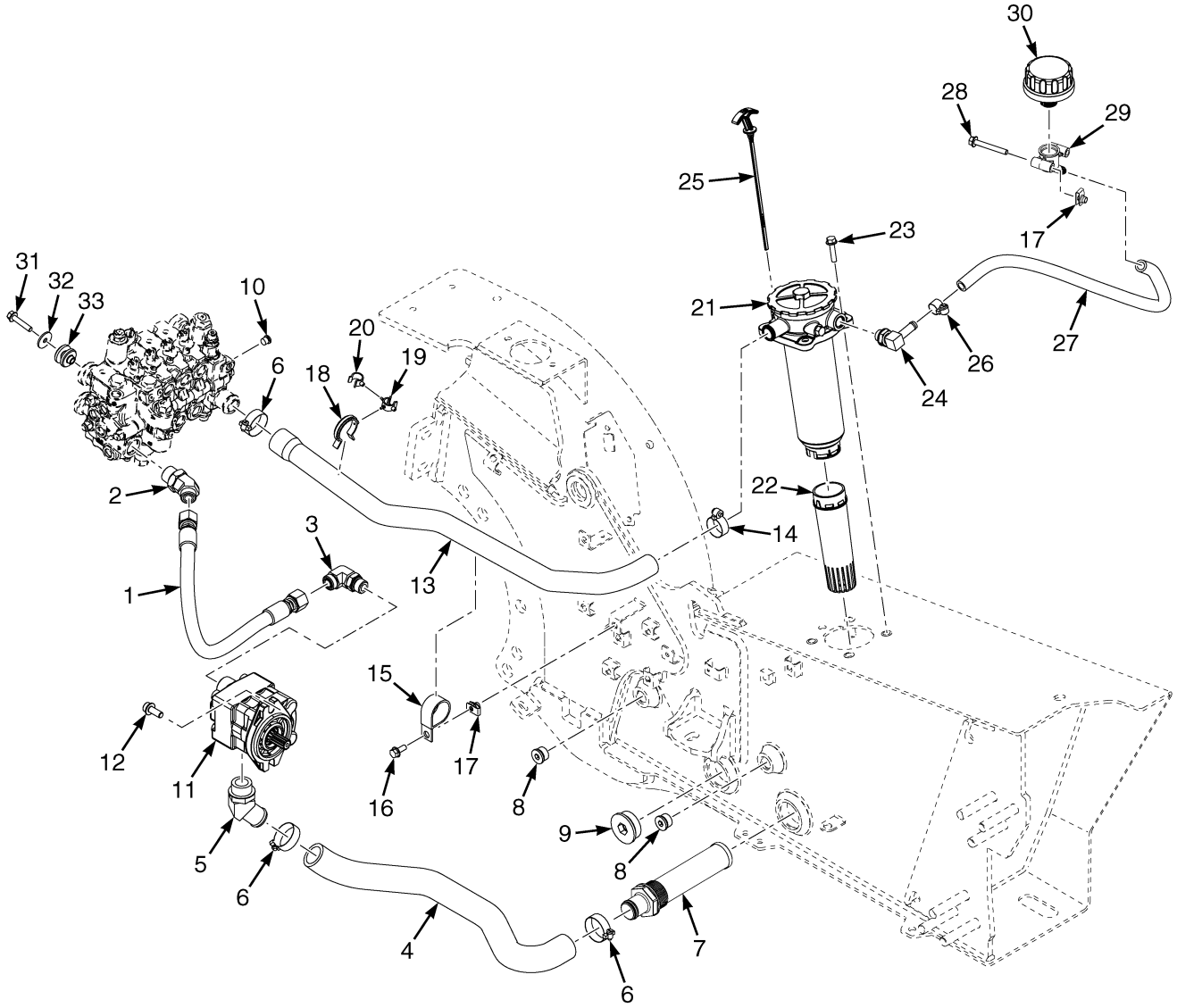

BP151235

©2026 HYSTER COMPANY

HYDRAULIC SUPPLY AND RETURN

LPG/BI-FUEL – GEAR PUMP

ITEM	PART NO.	DESCRIPTION	QTY
1	4698343	Hose Assy	1
2	1516207	Fitting	1
3	1487067	Fitting	1
4	4683941	Hose - Tank Suction	1
5	134173	Fitting	1
5	16487	O-Ring	1
6	127045	Clamp (Hose)	3
7	4674953	Strainer (Suction)	1
8	233693	Fitting	2
8	16485	O-Ring	1
9	222445	Plug	1
9	16984	O-Ring	1
10	222442	Fitting Assembly	1
10	204128	Plug	1
10	16481	O-Ring	1
11	4699507	Gear Pump - 29.3 CC/Rev	1
11	4281596	Kit-Seal	1
12	1564515	Capscrew	2
13	4694066	Hose - Return Line, 4 function, LPG	1
13	4702032	Hose - Return Line, 2 and 3 function, LPG	1
14	2306118	Clamp	1
15	258590	Clamp	1
16	1527880	Capscrew	1
16	1510113	Capscrew (Alternate Part)	1
17	1480237	Nut (Foldover)	3
18	4166547	Clamp (Swivel)	1
19	1502057	Clamp	1
20	1606544	Clamp (Swivel)	1
21	4242219	Hydraulic Filter - Housing Assembly (☞Figure 16-10)	1
21	**b** 4326837	Hydraulic Filter (Assembly) (Alternate Part) (☞Figure 16-10)	1
21	**c** 4326838	Hydraulic Filter (Assembly) (Fliter Not Inlcuded) (☞Figure 16-11)	1
22	4683103	Diffuser - Medium	1
23	1528482	Capscrew	4
24	222510	Fitting	1
24	222502	Fitting (Alternate Part)	1
24	16484	O-Ring	1
25	4707422	Dipstick	1
26	130845	Clamp	2
27	4682720	Hose - Breather	1
28	1510115	Capscrew	2
29	4215552	Adapter - Breather	1
30	4246193	Breather	1
30	1582161	Breather (Optional)	1
30	~~1450764~~		
	16486	O-Ring (For Optional Breather)	1
31	1510114	Capscrew	3
32	1346752	Washer	3
33	4683160	Isolator	3
	a 4733832	Hose Guard - Spiral Wrap, Hyd Supply Hose	1

©2026 HYSTER COMPANY

FOOTNOTES:

a Not Illustrated
b → 11/2021
c 11/2021 →

©2026 HYSTER COMPANY

NOTES

HYDRAULIC SUPPLY AND RETURN (FIGURE 16-6)

DIESEL — PISTON PUMP

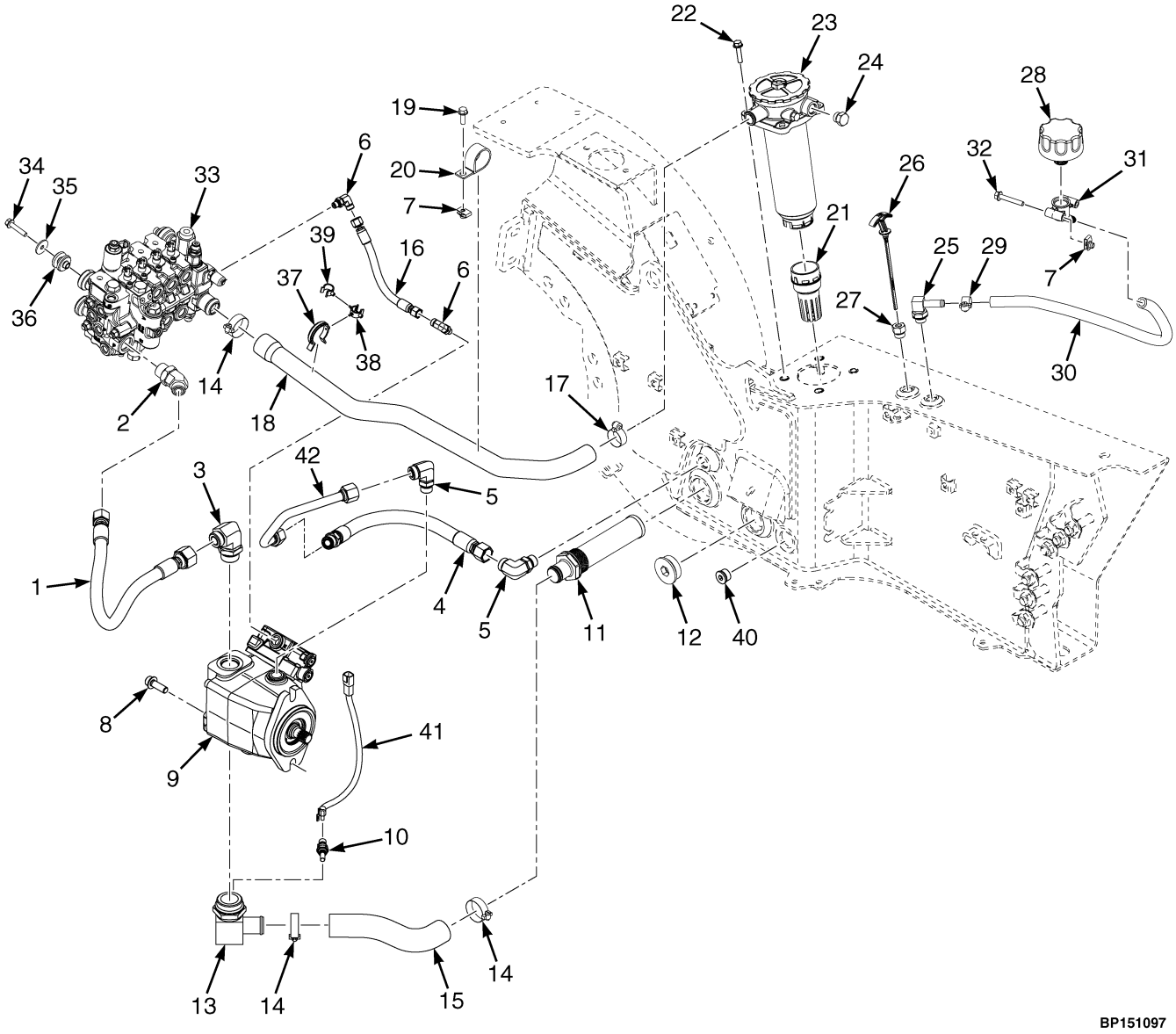

©2026 HYSTER COMPANY

HYDRAULIC SUPPLY AND RETURN
DIESEL – PISTON PUMP

ITEM	PART NO.	DESCRIPTION	QTY
1	4711432	Hose Assy - VDP Supply	1
2	1516207	Fitting	1
3	1487073	Fitting	1
4	4704312	Hose Assy	1
5	1487067	Fitting	2
6	1487058	Fitting	2
7	1480237	Nut (Foldover)	3
8	1636808	Capscrew	2
9	4710799	Variable Disp Pump - 30 CC/Rev (H40A-H50A) (☞Figure 16-59)	1
9	4710800	Variable Disp Pump - 32 CC/Rev (H60A-H70A) (☞Figure 16-59)	1
10	1515654	Temperature Sensor	1
11	4674953	Strainer (Suction)	1
12	222445	Plug	1
12	16984	O-Ring	1
13	4254211	Fitting - Hose Nip	1
14	127045	Clamp (Hose)	3
15	4682719	Hose - Tank Suction VDP	1
16	4682701	Hose Assy - VDP Load Sense	1
16	4723861	Hose (VDP Load Sense) (Alternate Part)	1
17	2306118	Clamp	1
18	4702031	Hose - Return Line, 2 and 3 function, Diesel	1
18	4694067	Hose - Return Line, 4 function, Diesel	1
19	1527880	Capscrew	1
19	1510113	Capscrew (Alternate Part)	1
20	258590	Clamp	1
21	4683102	Diffuser - Short	1
22	1528482	Capscrew	4
23	4242219	Hydraulic Filter - Housing Assembly (☞Figure 16-10)	1
23	**b** 4326837	Hydraulic Filter (Assembly) (Alternate Part) (☞Figure 16-10)	1
23	**c** 4326838	Hydraulic Filter (Assembly) (Fliter Not Inlcuded) (☞Figure 16-11)	1
24	14595	Plug Assembly	1
25	222510	Fitting (Cert Dsl)	1
25	222502	Fitting (Non Cert Dsl)	1
25	16484	O-Ring	1
26	4682555	Dipstick	1
27	4255013	Fitting - Dispstick Holder	1
28	4246193	Breather	1
28	1582161	Breather (Optional)	1
28	~~1450764~~		
	16486	O-Ring (For Optional Breather)	1
29	130845	Clamp	2
30	4682673	Hose - Breather	1
31	4215552	Adapter - Breather	1
32	1510115	Capscrew	2
33	. . . . .	Hydraulic Control Valve	1
34	1510114	Capscrew	3
35	1346752	Washer	3
36	4683160	Isolator	3
37	4166547	Clamp (Swivel) (4 Function)	1
38	1502057	Clamp (4 Function)	1

HYDRAULIC SUPPLY AND RETURN

DIESEL – PISTON PUMP

ITEM	PART NO.	DESCRIPTION	QTY
39	1606544	Clamp (Swivel) (4 Function)	1
40	233693	Fitting	1
40	16485	O-Ring	1
41	4702151	Wire Harness - HYD/VDP Temp Sensor Jumper	1
42	4704311	Tube Assy - VDP Case Drain	1
	a 4733832	Hose Guard - Spiral Wrap, Hyd Supply Hose	1

FOOTNOTES:

a Not Illustrated
b → 11/2021
c 11/2021 →

©2026 HYSTER COMPANY

HYDRAULIC SUPPLY AND RETURN (FIGURE 16-7)

LPG/BI-FUEL — PISTON PUMP

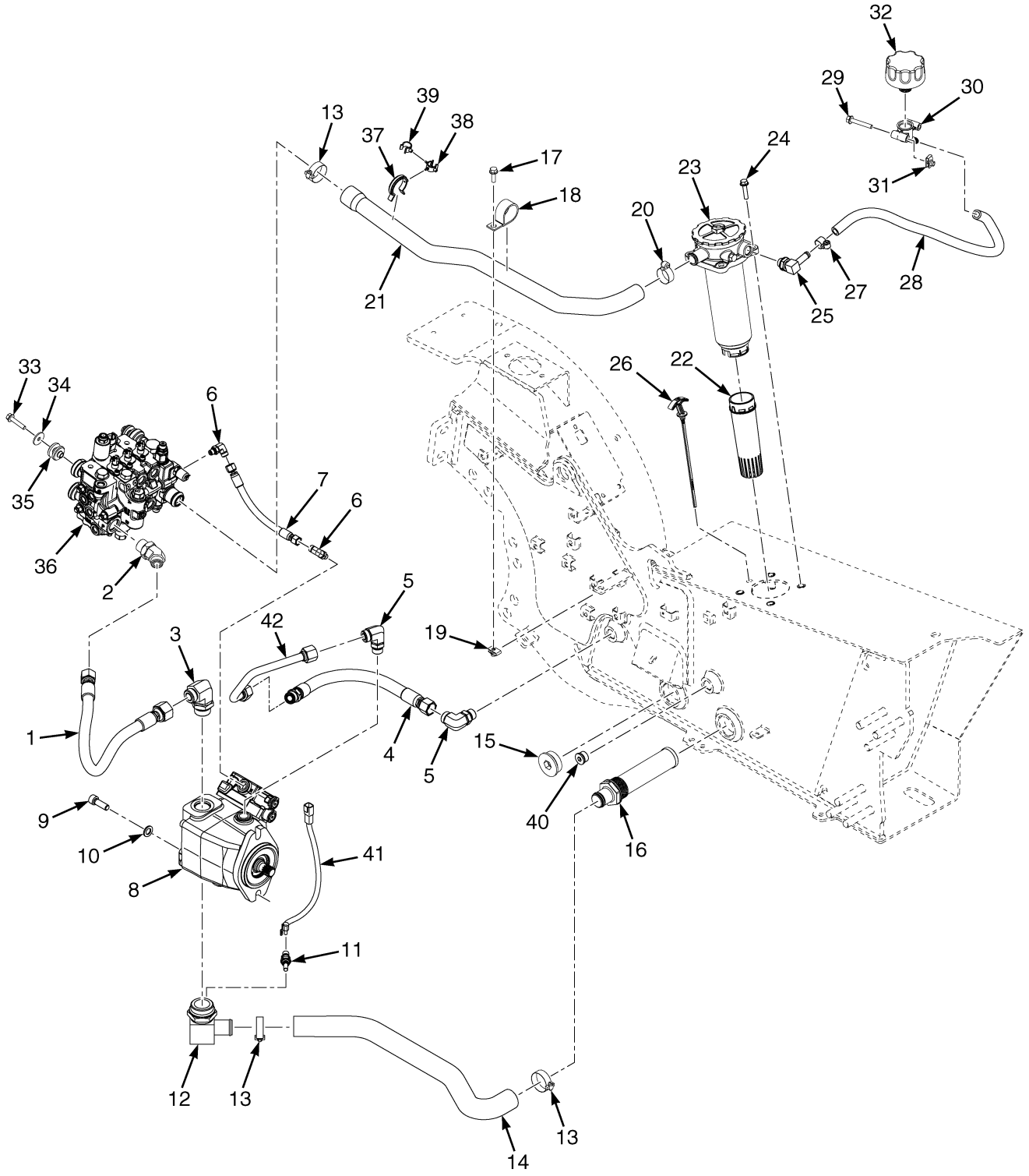

ITEM	PART NO.	DESCRIPTION	QTY
1	4711432	Hose Assy - VDP Supply	1
2	1516207	Fitting	1
3	1487073	Fitting	1
4	4704312	Hose Assy	1
5	1487067	Fitting	2
6	1487058	Fitting	2
7	4682701	Hose Assy - VDP Load Sense	1
7	4723861	Hose (VDP Load Sense) (Alternate Part)	1
8	4710799	Variable Disp Pump - 30 CC/Rev (H40A-H50A) (☞Figure 16-59)	1
8	4710800	Variable Disp Pump - 32 CC/Rev (H60A-H70A) (☞Figure 16-59)	1
9	1636808	Capscrew	2
10	296422	Washer	2
11	1515654	Temperature Sensor	1
12	4254211	Fitting - Hose Nip (Fitting)	1
13	127045	Clamp (Hose)	3
14	4683940	Hose - Tank Suction VDP	1
15	222445	Plug	1
15	16984	O-Ring	1
16	4674953	Strainer (Suction)	1
17	1510113	Capscrew	1
18	258590	Clamp	1
19	1480237	Nut (Foldover)	1
20	2306118	Clamp	1
21	4694066	Hose - Return Line, 4 function, LPG	1
22	4683103	Diffuser - Medium	1
23	4242219	Hydraulic Filter - Housing Assembly (☞Figure 16-10)	1
23	**b** 4326837	Hydraulic Filter (Assembly) (Alternate Part) (☞Figure 16-10)	1
23	**c** 4326838	Hydraulic Filter (Assembly) (Fliter Not Inlcuded) (☞Figure 16-11)	1
24	1528482	Capscrew	4
25	222510	Fitting	1
25	16484	O-Ring	1
25	222502	Fitting (Alternate Part)	1
26	4707422	Dipstick	1
27	130845	Clamp	2
28	4682720	Hose - Breather	1
29	1510115	Capscrew	2
30	4215552	Adapter - Breather	1
31	1480237	Nut (Foldover)	2
32	4246193	Breather	1
32	1582161	Breather (Optional)	1
32	~~1450764~~		
	16486	O-Ring (For Optional Breather)	1
33	1510114	Capscrew	3
34	1346752	Washer	3
35	4683160	Isolator	3
36	. . . . .	Hydraulic Control Valve	1
37	4166547	Clamp (Swivel) (4 Function)	1
38	1502057	Clamp (4 Function)	1
39	1606544	Clamp (Swivel) (4 Function)	1
40	233693	Fitting	1
40	16485	O-Ring	1
41	4702151	Wire Harness - HYD/VDP Temp Sensor Jumper	1
42	4704311	Tube Assy - VDP Case Drain	1

©2026 HYSTER COMPANY

ITEM	PART NO.	DESCRIPTION	QTY
	a 4733832	Hose Guard - Spiral Wrap, Hyd Supply Hose	1

FOOTNOTES:

a Not Illustrated
b → 11/2021
c 11/2021 →

HYDRAULIC SUPPLY AND RETURN (FIGURE 16-8)

HYDROSTATIC TRANSMISSION (→ 8/2024)

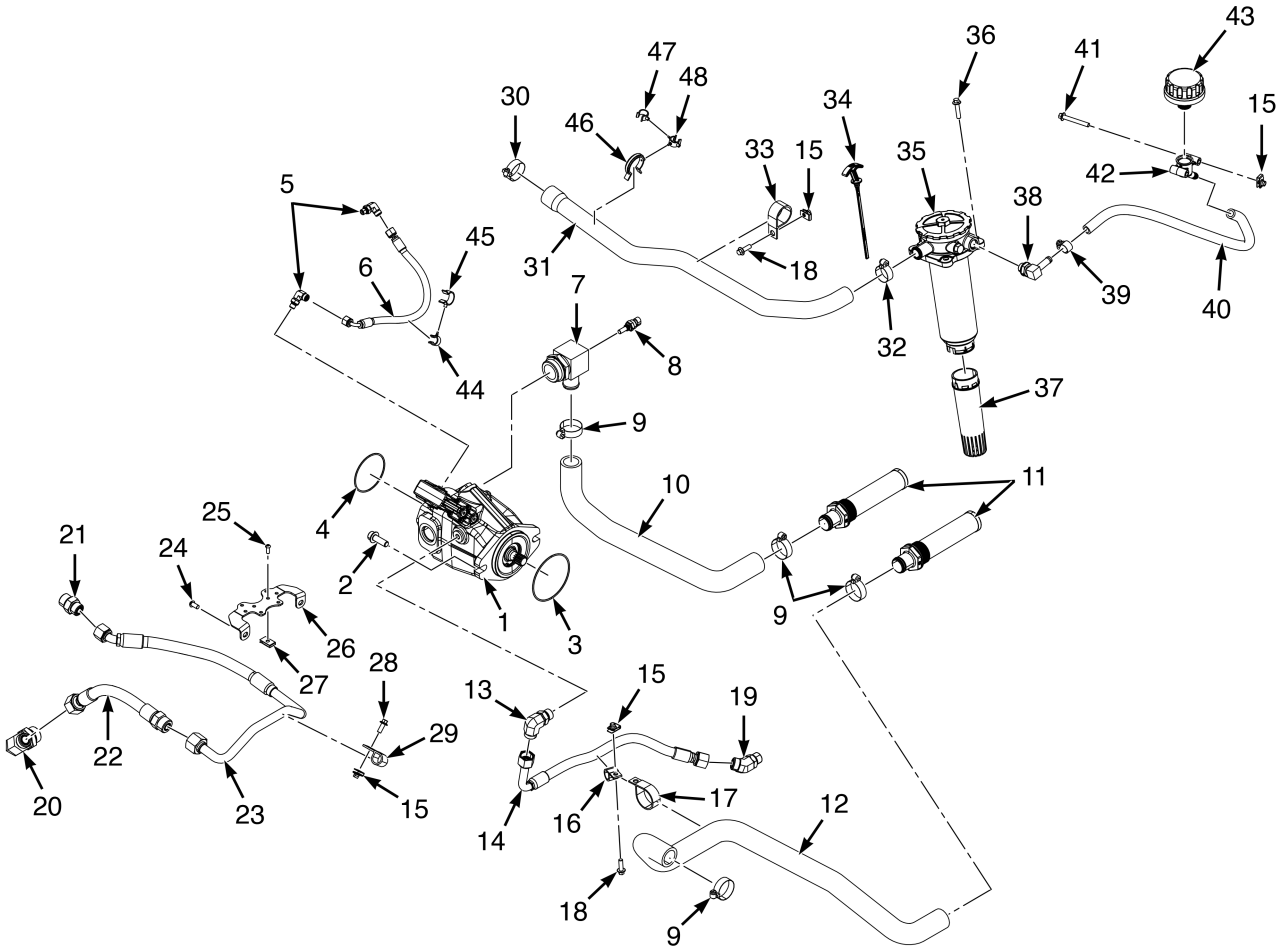

©2026 HYSTER COMPANY

HYDRAULIC SUPPLY AND RETURN

HYDROSTATIC TRANSMISSION (→ 8/2024)

ITEM	PART NO.	DESCRIPTION	QTY
1	4710801	Variable Disp Pump - 32 CC/Rev	1
2	1636808	Capscrew	2
3	4277405	O-Ring	1
4	4277406	O-Ring	1
5	1487058	Fitting	2
6	4700042	Hose Assy - VDP Load Sense	1
7	4299898	Fitting	1
8	1515654	Temperature Sensor	1
9	369804	Clamp	4
10	4720170	Hose - Suction LPG (HST)	1
10	4695138	Hose - Suction, HST, Diesel	1
11	4674953	Strainer (Suction)	2
12	4686632	Hose - HST Suction LPG	1
12	4686428	Hose Assy - Suction, HST (Dsl)	1
13	1487067	Fitting	1
14	4721749	Hose Assy - VDP Case Drain	1
15	1480237	Nut (Foldover)	7
16	1347202	Clamp	1
17	1316496	Clamp	1
18	1510113	Capscrew	2
19	1516205	Fitting	1
20	1487073	Fitting (Pump Outlet Port)	1
21	~~6996684~~		
	1486751	Fitting	1
22	4727263	Hose Assy - Supply (HST)	1
23	4727318	Hose And Tube Assy - VDP Supply (WBA)	1
24	4120965	Screw	2
25	1510126	Screw (Button Head)	2
26	4331857	Bracket	1
27	4121672	Nut	2
28	1527880	Capscrew	2
29	298132	Clamp , Hose	2
30	127045	Clamp (Hose)	1
31	4694066	Hose - Return Line, 4 function, LPG	1
32	2306118	Clamp	1
33	258590	Clamp	1
34	4707422	Dipstick	1
35	4326838	Hydraulic Filter (Assembly) (Fliter Not Inlcuded) (☞Figure 16-11)	1
36	1528482	Capscrew	4
37	4683103	Diffuser - Medium	1
38	222510	Fitting	1
38	16484	O-Ring	1
39	130845	Clamp	2
40	4682720	Hose - Breather	1
41	1510115	Capscrew	2
42	4215552	Adapter - Breather	1
43	4246193	Breather	1
43	1582161	Breather (Optional)	1
43	~~1450764~~		
	16486	O-Ring (Optional)	1

©2026 HYSTER COMPANY

HYDRAULIC SUPPLY AND RETURN

HYDROSTATIC TRANSMISSION (→ 8/2024)

ITEM	PART NO.	DESCRIPTION	QTY
44	1542436	Clamp (Swivel)	1
45	1542442	Clamp (Swivel)	1
46	4166547	Clamp (Swivel)	1
47	1606544	Clamp (Swivel)	1
48	1502057	Clamp	1
	a 4733832	Hose Guard - Spiral Wrap, Hyd Supply Hose	1

FOOTNOTES:

a Not Illustrated

©2026 HYSTER COMPANY

NOTES

HYDRAULIC SUPPLY AND RETURN (FIGURE 16-9)

HYDROSTATIC TRANSMISSION (8/2024 →)

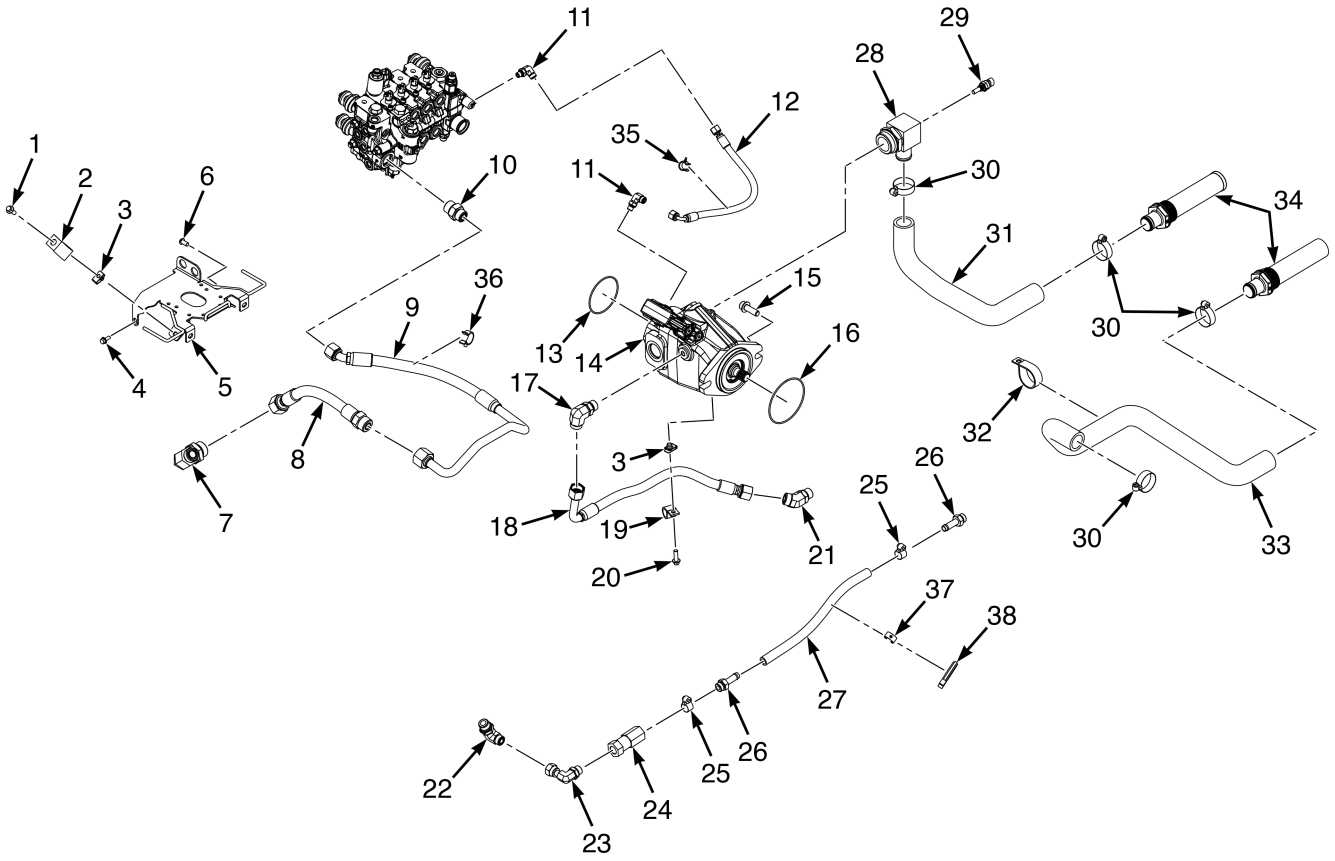

BP151698

©2026 HYSTER COMPANY

HYDRAULIC SUPPLY AND RETURN

HYDROSTATIC TRANSMISSION (8/2024 →)

ITEM	PART NO.	DESCRIPTION	QTY
1	1527880	Capscrew	2
2	298132	Clamp , Hose	2
3	1480237	Nut (Foldover)	3
4	~~4111055~~		
	1527876	Capscrew	1
5	4388761	Bracket Wldmt (HST Transmission)	1
6	4120965	Screw	2
7	1487073	Fitting	1
8	4727263	Hose Assy - Supply (HST)	1
9	4727318	Hose And Tube Assy - VDP Supply (WBA)	1
10	~~6996684~~		
	1486751	Fitting	1
11	1487058	Fitting	2
12	4700042	Hose Assy - VDP Load Sense	1
13	4277406	O-Ring	1
14	4710801	Variable Disp Pump - 32 CC/Rev	1
15	1636808	Capscrew	2
16	4277405	O-Ring	1
17	1487067	Fitting	1
18	4721749	Hose Assy - VDP Case Drain	1
19	1347202	Clamp	1
20	1510113	Capscrew	1
21	1516205	Fitting	1
22	1487065	Fitting	1
23	1486579	Fitting	1
24	4738982	Check Valve	1
25	166857	Clamp	2
26	171007	Fitting	2
26	16484	O-Ring	1
27	4739381	Hose (HST Check Valve Return)	1
28	4299898	Fitting	1
29	1515654	Temperature Sensor	1
30	369804	Clamp	4
31	4695138	Hose - Suction, HST, Diesel	1
32	1316496	Clamp	1
33	4686428	Hose Assy - Suction, HST	1
34	4674953	Strainer (Suction)	2
35	1542442	Clamp (Swivel)	1
36	1542436	Clamp (Swivel)	1
37	1502066	Clamp (Swivel)	1
38	4166547	Clamp (Swivel)	1

©2026 HYSTER COMPANY

HYDRAULIC FILTER ASSEMBLY (FIGURE 16-10)

(→ 11/2021)

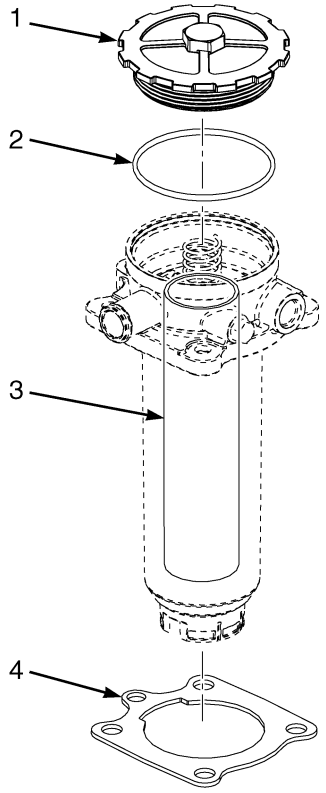

BP151158

ITEM	PART NO.	DESCRIPTION	QTY
	4242219	Hydraulic Filter - Housing Assembly	1
	4326837	Hydraulic Filter (Assembly) (Alternate Part)	1
1	4266482	Cover - Kit	1
2	4266483	O-Ring - Kit	1
3	4261701	Kit-Filter Element	1
4	4266481	Gasket - Kit	1

See Service Manual for service procedures.
©2026 HYSTER COMPANY

HYDRAULIC FILTER (FIGURE 16-11)

SERVICE PARTS (11/2021 →)

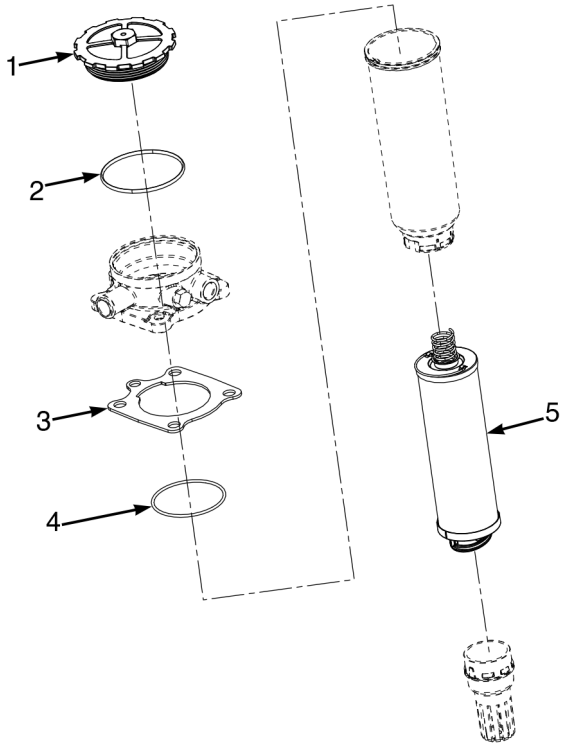

BP151798

ITEM	PART NO.	DESCRIPTION	QTY
1	. . . . .	Cover	1
2	. . . . .	O-Ring, Cover	1
3	. . . . .	Gasket	1
4	. . . . .	O-Ring ,Bowl	1
5	. . . . .	Element, Hyd Filter	1
	a 4261701	Kit-Filter Element (Hyd Filter)	1
	a 4266481	Gasket - Kit	1
	a 4266482	Cover - Kit	1
	a 4266483	O-Ring - Kit	1
	. . . . .	O-Ring, Element	1

FOOTNOTES:

a For use on hydraulic filter assembly 4326838

PILOT PRESSURE ACCUMULATOR (FIGURE 16-12)

HYDRAULIC SYSTEM — WITH VDP, WITHOUT HFD

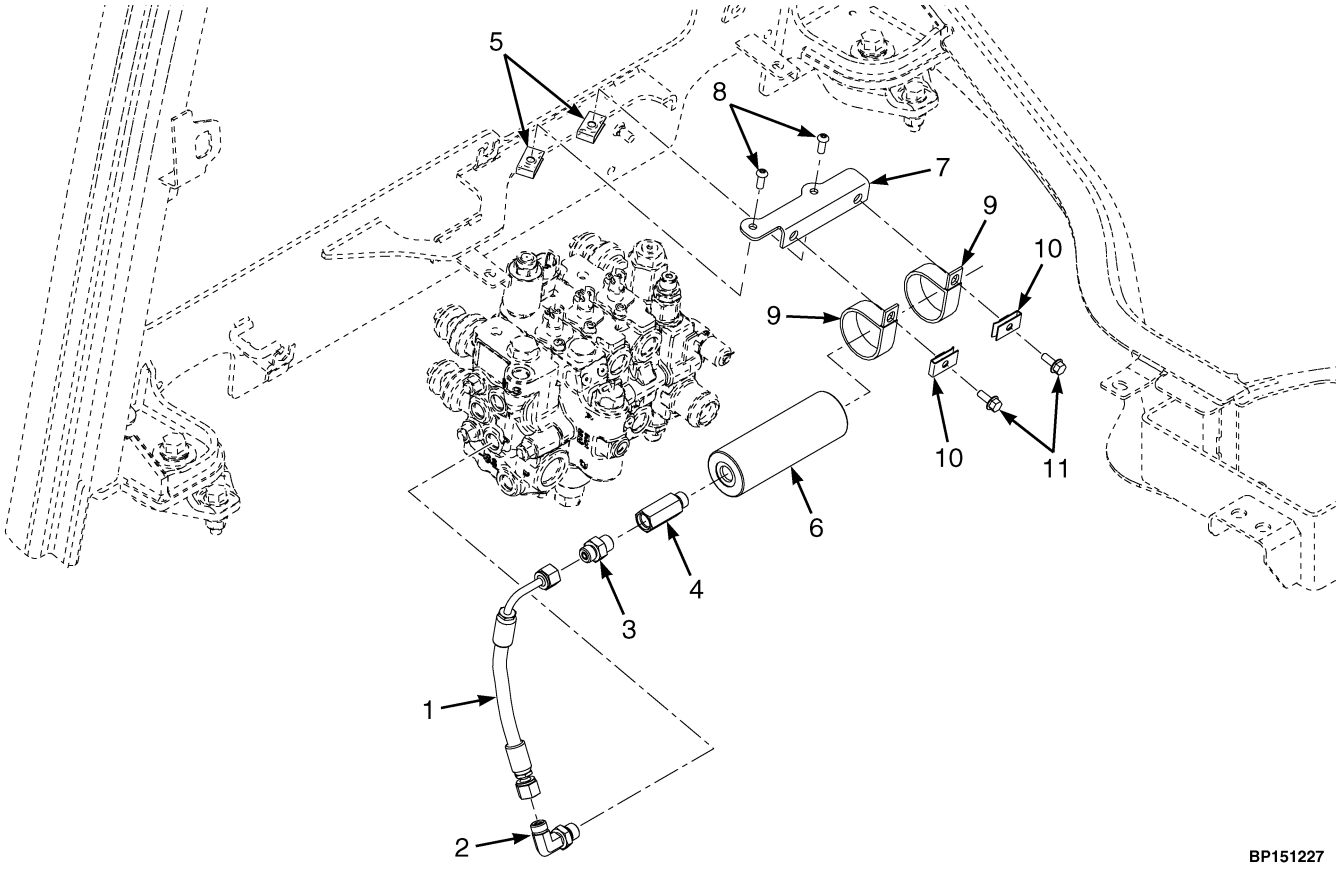

ITEM	PART NO.	DESCRIPTION	QTY
1	4701851	Hose Assy	1
2	1487059	Fitting	1
3	1486738	Fitting	1
4	4293716	Fitting - Flow Control	1
5	1350215	Nut (Foldover)	2
6	4609405	Accumulator	1
7	4293717	Bracket - Accumulator Mount	1
8	1510126	Screw (Button Head)	2
9	181899	Clamp	2
10	1566420	Nut (Foldover)	2
11	~~4111055~~		
	1527876	Capscrew	2

©2026 HYSTER COMPANY

PILOT PRESSURE ACCUMULATOR (FIGURE 16-13)

HYDRAULIC SYSTEM — WITH VDP, WITH HFD

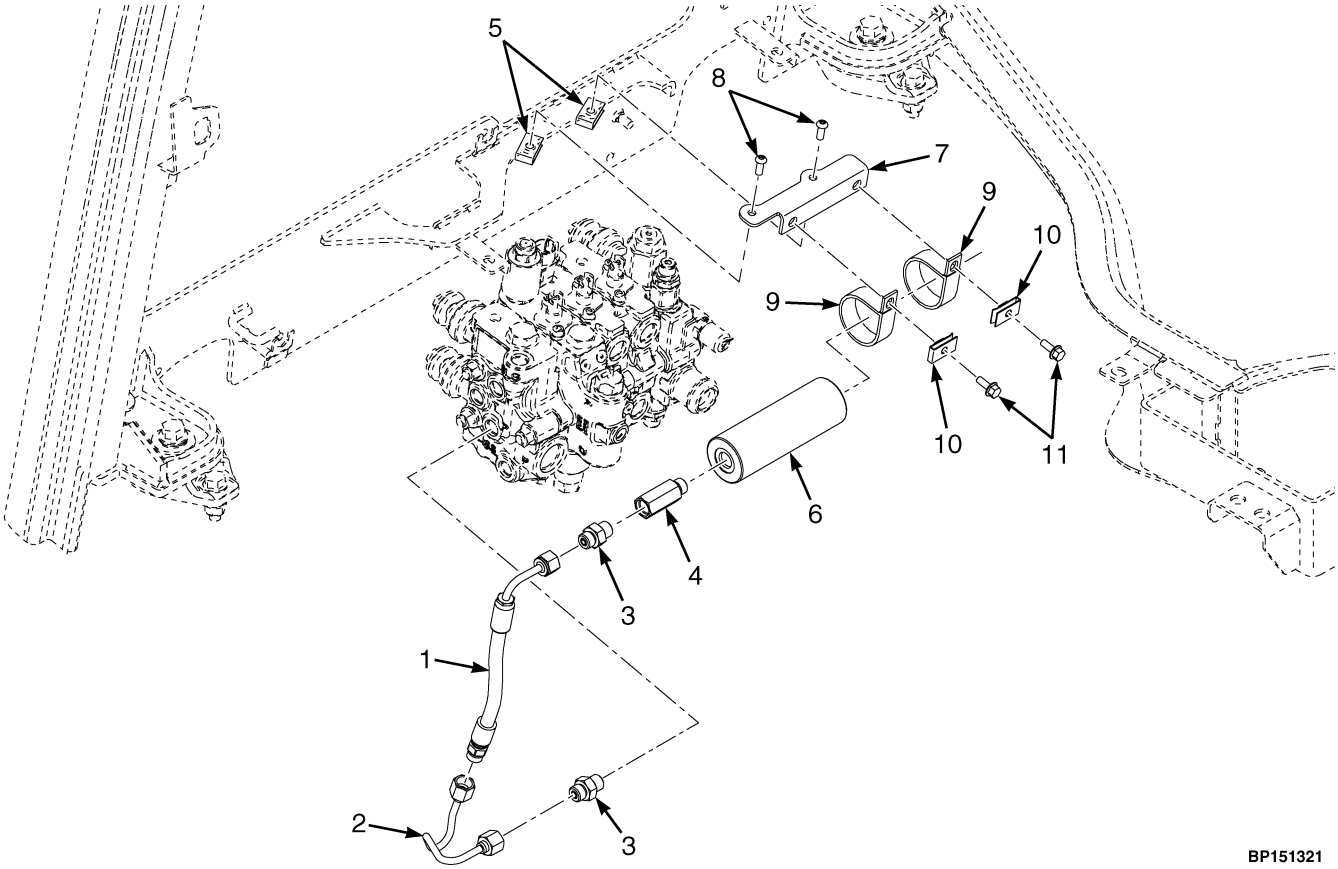

ITEM	PART NO.	DESCRIPTION	QTY
1	4701852	Hose Assy	1
2	4701869	Tube Assy - VDP Accumulator w/ HFD	1
3	1486738	Fitting	1
4	4293716	Fitting - Flow Control	1
5	1350215	Nut (Foldover)	2
6	4609405	Accumulator	1
7	4293717	Bracket - Accumulator Mount	1
8	1510126	Screw (Button Head)	2
9	181899	Clamp	2
10	1566420	Nut (Foldover)	2
11	~~4111055~~		
	1527876	Capscrew	2

HYDRAULIC CONTROL VALVE ASSEMBLY (FIGURE 16-14)

MANUAL AND ELECTRONIC HYDRAULICS — H40A-H50A (→ 10/2022)

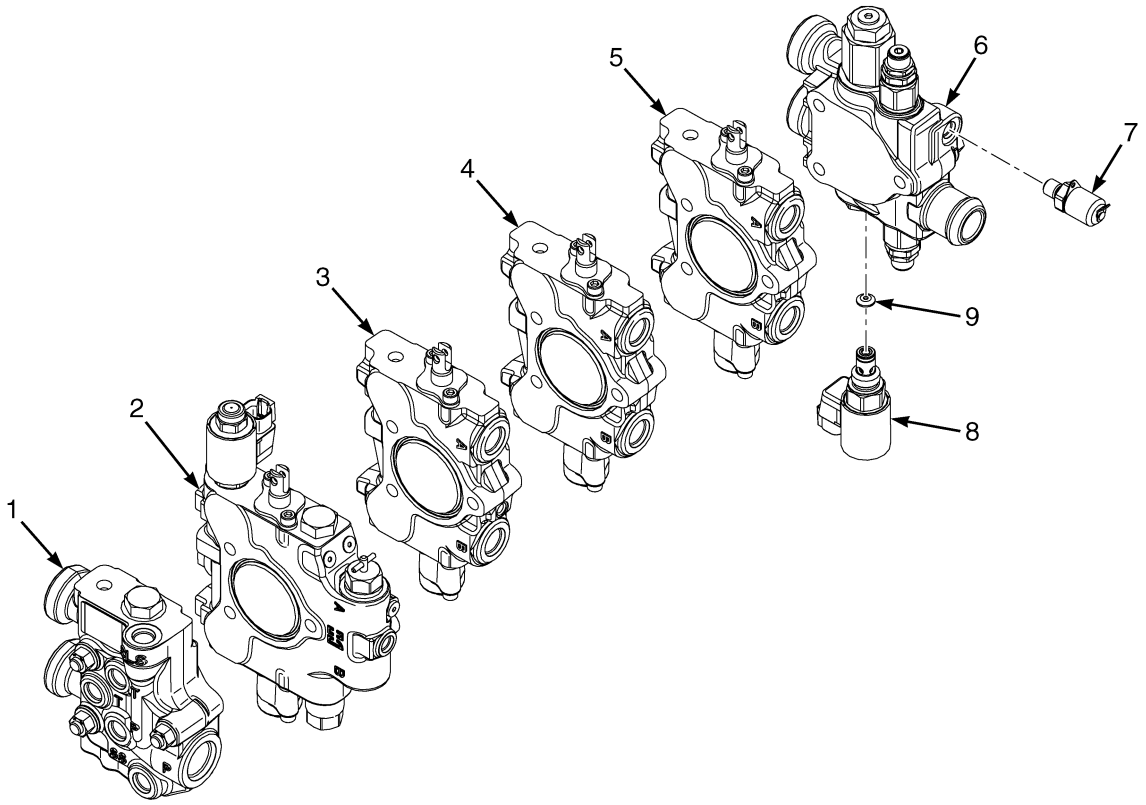

©2026 HYSTER COMPANY

HYDRAULIC CONTROL VALVE ASSEMBLY

MANUAL AND ELECTRONIC HYDRAULICS – H40A-H50A (→ 10/2022)

KEY:
A: M-Hyd Gear Pump
B: E-Hyd Gear Pump
C: M-Hyd VDP
D: E-Hyd VDP

ITEM	PART NO.	DESCRIPTION	QTY A	QTY B	QTY C	QTY D
	4683959	Hyd Control Valve (2 Function)	1	..	..	..
	4727009	Hyd Control Valve (2 Function) (Alternate Part)	1	..	..	..
	4297986	Tie Rod (2 Function Only)	1	..	..	..
	1350707	Tie Rod	3	..	..	..
	188534	Nut	6	..	..	..
	4683960	Hyd Control Valve (3 Function)	1	..	..	..
	4701426	Hyd Control Valve (3 Function) (240 BAR) (Used with Tilt Spool Position Sensor)	1	..	..	..
	4683962	Hyd Control Valve (3 Function) (240 BAR)	..	1	..	..
	4683973	Hyd Control Valve (3 Function with VDP)	..	..	1	..
	4727023	Hyd Control Valve (3 Function with VDP) (Alternate Part)	..	..	1	..
	4683975	Hyd Control Valve (3 Function with VDP) (240 BAR)	..	..	..	1
	4297987	Tie Rod (3 Function Only)	1	1	1	1
	1327415	Tie Rod	3	3	3	3
	188534	Nut	6	6	6	6
	4683961	Hyd Control Valve (4 Function)	1	..	..	..
	4701427	Hyd Control Valve (4 Function) (240 BAR) (Used with Tilt Spool Position Sensor)	1	..	..	..
	4683963	Hyd Control Valve (4 Function) (240 BAR)	..	1	..	..
	4683974	Hyd Control Valve (4 Function with VDP)	..	..	1	..
	4683976	Hyd Control Valve (4 Function with VDP) (240 BAR)	..	..	..	1
	4297988	Tie Rod	1	1	1	1
	4311818	Tie Rod	3	3	3	3
	188534	Nut	6	6	6	6
1	4297956	Valve Section (Inlet) (☞Figure 16-18)	1	..	1	..
1	~~4297957~~					
	4363455	Valve Section (☞Figure 16-19)	..	1	..	1
2	4297973	Valve Section (Lift/Lower) (☞Figure 16-23)	1	..	1	..
2	4297975	Valve Section (Lift) (☞Figure 16-24)	..	1	..	1
3	4297965	Valve Section (Tilt) (☞Figure 16-20)	1	..	..	..
3	4297971	Valve Section (Tilt) (w/SPS or VDP) (☞Figure 16-22)	1	..	1	..
3	4297967	Valve Section (Tilt) (☞Figure 16-21)	..	1	..	1
4	4297960	Valve Section (Auxiliary) (4th Function M-Hyd) (☞Figure 16-20)	1	..	1	..
4	4297962	Valve Section (Auxiliary 1) (4th Function E-Hyd) (☞Figure 16-21)	..	1	..	1
5	4297960	Valve Section (Auxiliary) (3rd Function M-Hyd) (☞Figure 16-20)	1	..	1	..
5	4297964	Valve Section (Auxiliary 2) (3rd Function E-Hyd) (☞Figure 16-21)	..	1	..	1
6	~~4297981~~					
	4337831	Valve Section (Outlet) (☞Figure 16-25)	1	1	..	..
6	4297984	Valve Section (Outlet) (☞Figure 16-25)	..	..	1	1

HYDRAULIC CONTROL VALVE ASSEMBLY

MANUAL AND ELECTRONIC HYDRAULICS – H40A-H50A (→ 10/2022)

KEY:
A: M-Hyd Gear Pump
B: E-Hyd Gear Pump
C: M-Hyd VDP
D: E-Hyd VDP

ITEM	PART NO.	DESCRIPTION	QTY A	QTY B	QTY C	QTY D
7	2061646	Fitting (Diagnostic)	1	1	1	1
8	4258879	Solenoid Valve	1	1	1	1
9	1662012	Disk	..	..	1	1
9	~~4085979~~					
	4203214	Disk	1	1	..	..

See Service Manual for service procedures.
©2026 HYSTER COMPANY

NOTES

HYDRAULIC CONTROL VALVE ASSEMBLY (FIGURE 16-15)

MANUAL AND ELECTRONIC HYDRAULICS — H40A-H50A (11/2022 →)

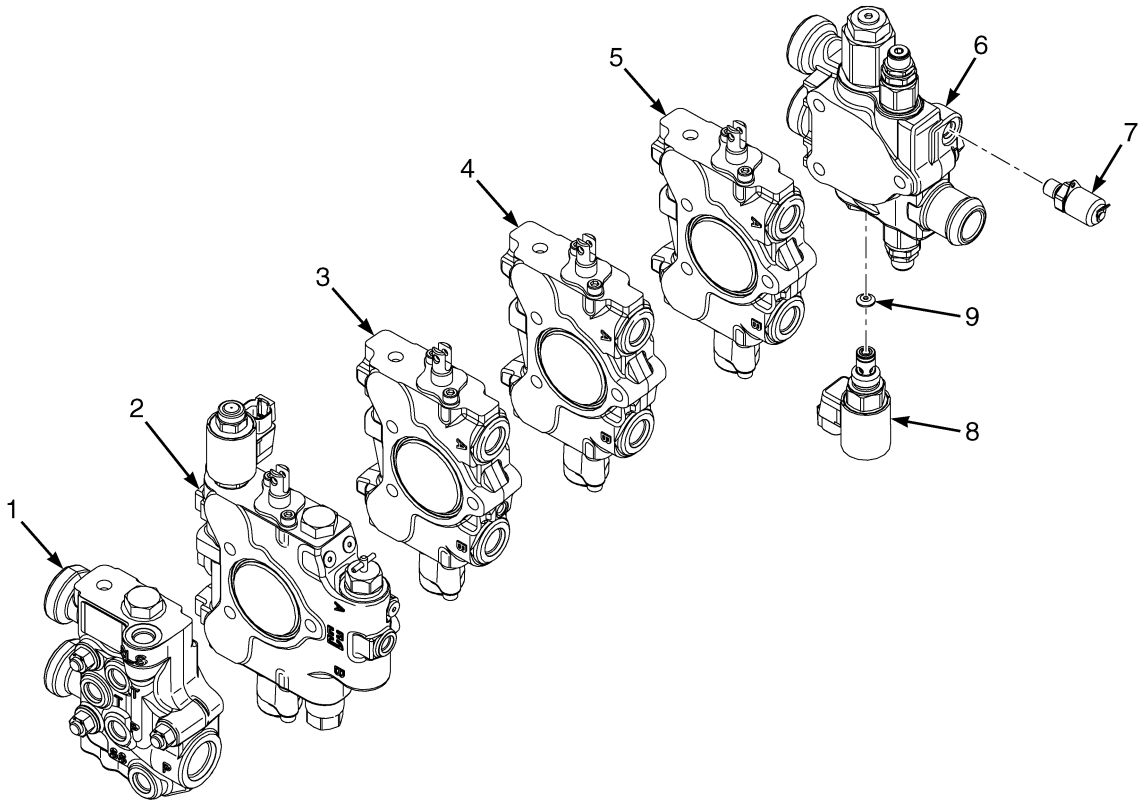

©2026 HYSTER COMPANY

HYDRAULIC CONTROL VALVE ASSEMBLY

MANUAL AND ELECTRONIC HYDRAULICS – H40A-H50A (11/2022 →)

KEY:
A: M-Hyd Gear Pump
B: E-Hyd Gear Pump
C: M-Hyd VDP
D: E-Hyd VDP

ITEM	PART NO.	DESCRIPTION	QTY A	QTY B	QTY C	QTY D
	4727009	Hyd Control Valve (2 Function)	1	..	..	..
	4727010	Hyd Control Valve (3 Function)	1	..	..	..
	4727017	Hyd Control Valve (3 Function) (240 BAR) (W/ TILT SPS)	1	..	..	..
	4727032	Hyd Control Valve (3 Function) (240 BAR)	..	1	..	..
	4727023	Hyd Control Valve (3 Function with VDP)	..	..	1	..
	4727038	Hyd Control Valve (3 Function) (240 BAR)	..	..	..	1
	4727011	Hyd Control Valve (4 Function)	1	..	..	..
	4727018	Hyd Control Valve (4 Function) (W/ TILT SPS)	1	..	..	..
	4727033	Hyd Control Valve (4 Function)	..	1	..	..
	4727024	Hyd Control Valve (4 Function with VDP)	..	..	1	..
	4727039	Hyd Control Valve (4 Function)	..	..	..	1
1	. . . . .	Inlet Valve	1	1	1	1
2	. . . . .	Lift/Lower Valve	1	1	1	1
3	. . . . .	Tilt Valve	1	1	1	1
4	. . . . .	Aux 1 Valve	1	1	1	1
5	. . . . .	Aux 2 Valve	1	1	1	1
6	. . . . .	Outlet Valve	1	1	1	1
7	2061646	Fitting (Diagnostic)	1	1	1	1
8	4258879	Solenoid Valve	1	1	1	1
9	1662012	Disk	1	1	..	..
9	~~4085979~~					
	4203214	Disk	..	..	1	1

HYDRAULIC CONTROL VALVE ASSEMBLY (FIGURE 16-16)

MANUAL AND ELECTRONIC HYDRAULICS — H60A-H70A (→ 10/2022)

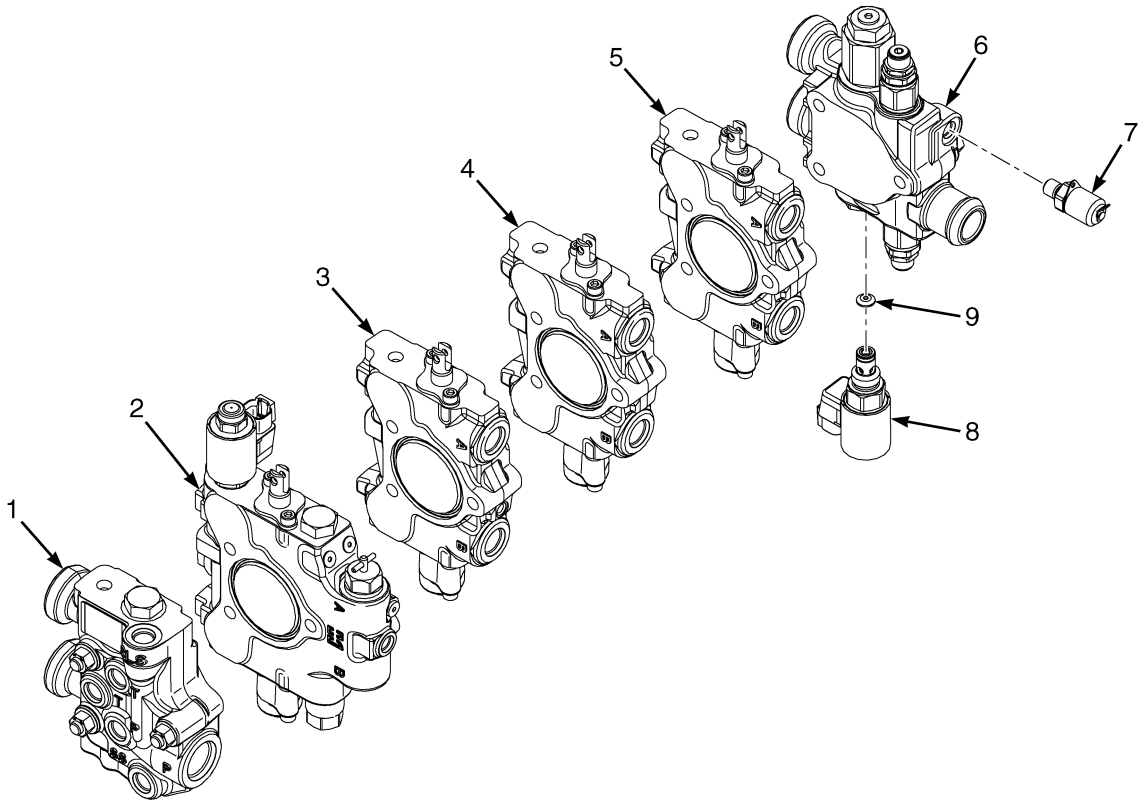

©2026 HYSTER COMPANY

HYDRAULIC CONTROL VALVE ASSEMBLY

MANUAL AND ELECTRONIC HYDRAULICS – H60A-H70A (→ 10/2022)

KEY:
A: M-HYD Gear Pump
B: E-HYD Gear Pump
C: M-Hyd VDP
D: E-Hyd VDP

ITEM	PART NO.	DESCRIPTION	QTY A	QTY B	QTY C	QTY D
	4683964	Hyd Control Valve (2 Function)	1	..	..	..
	4727012	Hyd Control Valve (2 Function) (Alternate Part)	1	..	..	..
	4297986	Tie Rod (2 Function Only)	1	..	..	..
	1350707	Tie Rod	3	..	..	..
	188534	Nut	6	..	..	..
	4683965	Hyd Control Valve (3 Function)	1	..	..	..
	4683967	Hyd Control Valve (3 Function)	..	1	..	..
	4727034	Hyd Control Valve (3 Function) (Alternate Part)	..	1	..	..
	4701428	Hyd Control Valve (3 Function) (w/SPS)	1	..	..	..
	4683977	Hyd Control Valve (3 Function with VDP) (240 BAR)	..	..	1	..
	4683979	Hyd Control Valve (3 Function with VDP) (240 BAR)	..	..	..	1
	4297987	Tie Rod (3 Function Only)	1	1	..	..
	1327415	Tie Rod	3	3	..	..
	188534	Nut	6	6	..	..
	4683966	Hyd Control Valve (4 Function)	1	..	..	..
	4683968	Hyd Control Valve (4 Function)	..	1	..	..
	4701429	Hyd Control Valve (4 Function) (w/SPS)	1	..	..	..
	4683978	Hyd Control Valve (4 Function with VDP) (240 BAR)	..	..	1	..
	4683980	Hyd Control Valve (4 Function with VDP) (240 BAR)	..	..	..	1
	4297988	Tie Rod (4 Function Only)	1	1	..	..
	4311818	Tie Rod	3	3	..	..
	188534	Nut	6	6	..	..
1	~~4297957~~					
	4363455	Valve Section (☞Figure 16-19)	..	1	..	1
1	4297956	Valve Section (Inlet) (☞Figure 16-18)	1	..	1	..
2	4297976	Valve Section (Lift) (☞Figure 16-24)	..	1	..	1
2	4297974	Valve Section (Lift/Lower) (☞Figure 16-23)	1	..	1	..
3	4297968	Valve Section (Tilt) (☞Figure 16-21)	..	1	..	1
3	4297966	Valve Section (Tilt) (☞Figure 16-20)	1	..	..	..
3	4297972	Valve Section (Tilt) (☞Figure 16-22)	..	..	1	..
4	4297962	Valve Section (Auxiliary 1) (4th Function E-Hyd) (☞Figure 16-21)	..	1	..	1
4	**a** 4297960	Valve Section (Auxiliary) (4th Function M-Hyd) (☞Figure 16-20)	1	..	1	..
5	4297964	Valve Section (Auxiliary 2) (3rd Function E-Hyd) (☞Figure 16-21)	..	1	..	1
5	**a** 4297960	Valve Section (Auxiliary) (3rd Function M-Hyd) (☞Figure 16-20)	1	..	1	..
6	~~4297981~~					
	4337831	Valve Section (Outlet) (☞Figure 16-25)	1	1	..	..
6	4297984	Valve Section (Outlet) (☞Figure 16-25)	..	..	1	1
7	2061646	Fitting (Diagnostic)	1	1	1	1
8	4258879	Solenoid Valve	1	1	1	1

©2026 HYSTER COMPANY

HYDRAULIC CONTROL VALVE ASSEMBLY

MANUAL AND ELECTRONIC HYDRAULICS – H60A-H70A (→ 10/2022)

KEY:
A: M-HYD Gear Pump
B: E-HYD Gear Pump
C: M-Hyd VDP
D: E-Hyd VDP

ITEM	PART NO.	DESCRIPTION	QTY A	QTY B	QTY C	QTY D
9	1662012	Disk	..	..	1	1
9	~~4085979~~					
	4203214	Disk	1	1	..	..

FOOTNOTES:

a Not used in 2F M-Hyd

©2026 HYSTER COMPANY

NOTES

HYDRAULIC CONTROL VALVE ASSEMBLY (FIGURE 16-17)

MANUAL AND ELECTRONIC HYDRAULICS — H60A-H70A (11/2022 →)

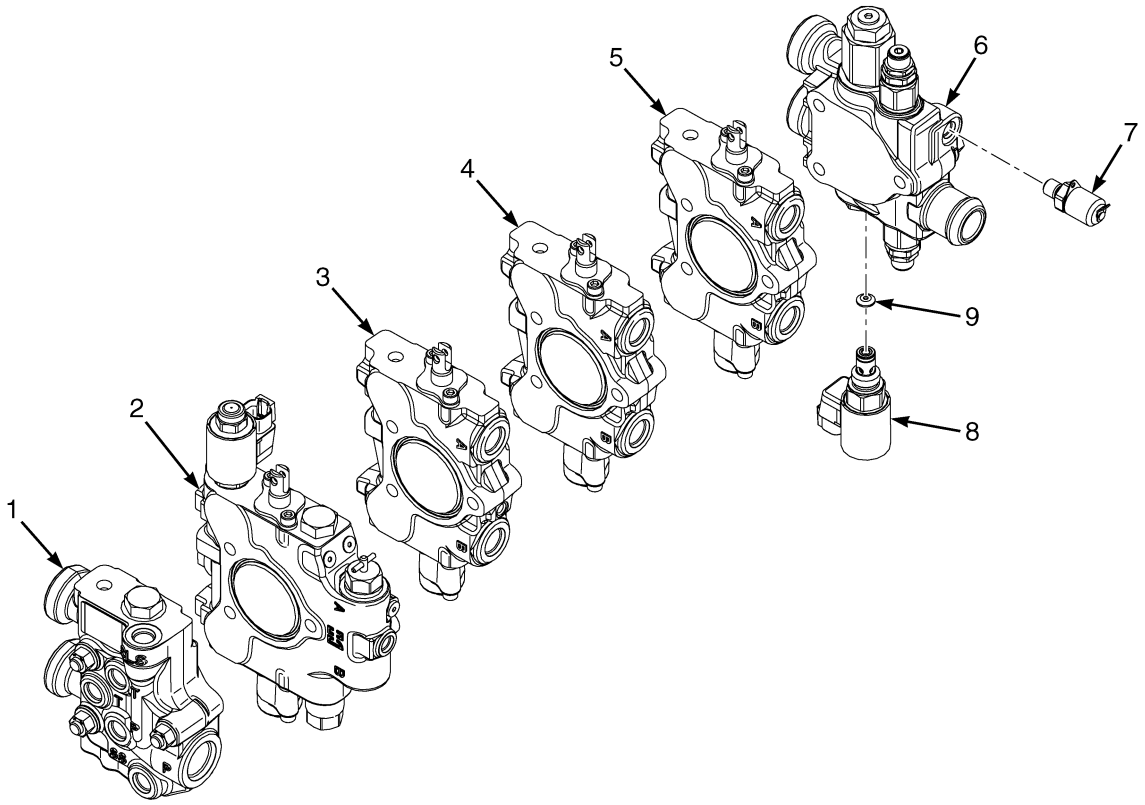

©2026 HYSTER COMPANY

HYDRAULIC CONTROL VALVE ASSEMBLY

MANUAL AND ELECTRONIC HYDRAULICS – H60A-H70A (11/2022 →)

KEY:
A: M-Hyd Gear Pump
B: E-Hyd Gear Pump
C: M-Hyd VDP
D: E-Hyd VDP

ITEM	PART NO.	DESCRIPTION	QTY A	QTY B	QTY C	QTY D
	4727012	Hyd Control Valve (2 Function)	1	..	..	..
	4727013	Hyd Control Valve (3 Function)	1	..	..	..
	4727034	Hyd Control Valve (3 Function)	..	1	..	..
	4727019	Hyd Control Valve (3 Function) (240 BAR) (w/ SPS)	1	..	..	..
	4727025	Hyd Control Valve (3 Function with VDP) (240 BAR)	..	..	1	..
	4727040	Hyd Control Valve (3 Function with VDP) (240 BAR)	..	..	..	1
	4727014	Hyd Control Valve (4 Function) (240 BAR)	1	..	..	..
	4727035	Hyd Control Valve (4 Function) (240 BAR)	..	1	..	..
	4727020	Hyd Control Valve (4 Function) (w/ SPS)	1	..	..	..
	4727026	Hyd Control Valve (4 Function with VDP) (240 BAR)	..	..	1	..
	4727041	Hyd Control Valve (4 Function with VDP) (240 BAR)	..	..	..	1
1	. . . . .	Inlet Valve	1	1	1	1
2	. . . . .	Lift/Lower Valve	1	1	1	1
3	. . . . .	Tilt Valve	1	1	1	1
4	. . . . .	Aux 1 Valve	1	1	1	1
5	. . . . .	Aux 2 Valve	1	1	1	1
6	. . . . .	Outlet Valve	1	1	1	1
7	2061646	Fitting (Diagnostic)	1	1	1	1
8	4258879	Solenoid Valve	1	1	1	1
9	1662012	Disk	1	1	..	..
9	~~4085979~~					
	4203214	Disk	..	..	1	1

©2026 HYSTER COMPANY

HYDRAULIC CONTROL VALVE ASSEMBLY (FIGURE 16-18)

INLET SECTION — MANUAL HYDRAULICS

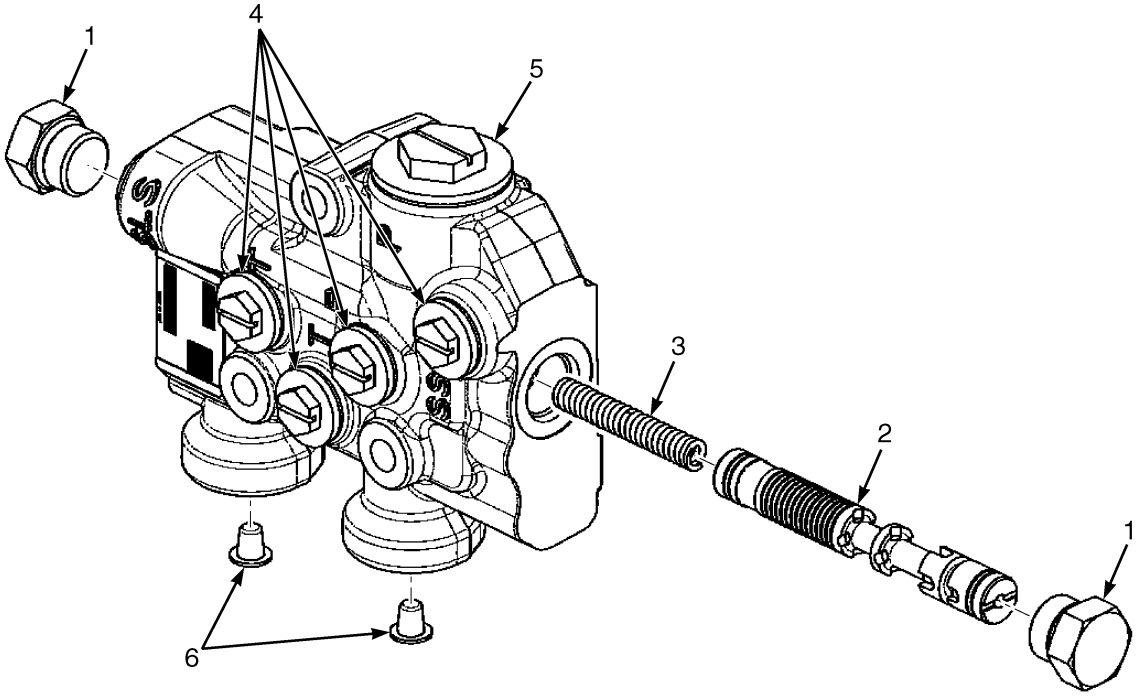

BP140362

ITEM	PART NO.	DESCRIPTION	QTY
	4297956	Valve Section (Inlet)	1
1	4298008	Plug	2
2	. . . . .	Spool	1
3	. . . . .	Spring	1
4	. . . . .	Plug	5
5	. . . . .	Plug	1
6	. . . . .	Plug	1

See Service Manual for service procedures.
©2026 HYSTER COMPANY

HYDRAULIC CONTROL VALVE ASSEMBLY (FIGURE 16-19)

INLET SECTION — ELECTRONIC HYDRAULICS

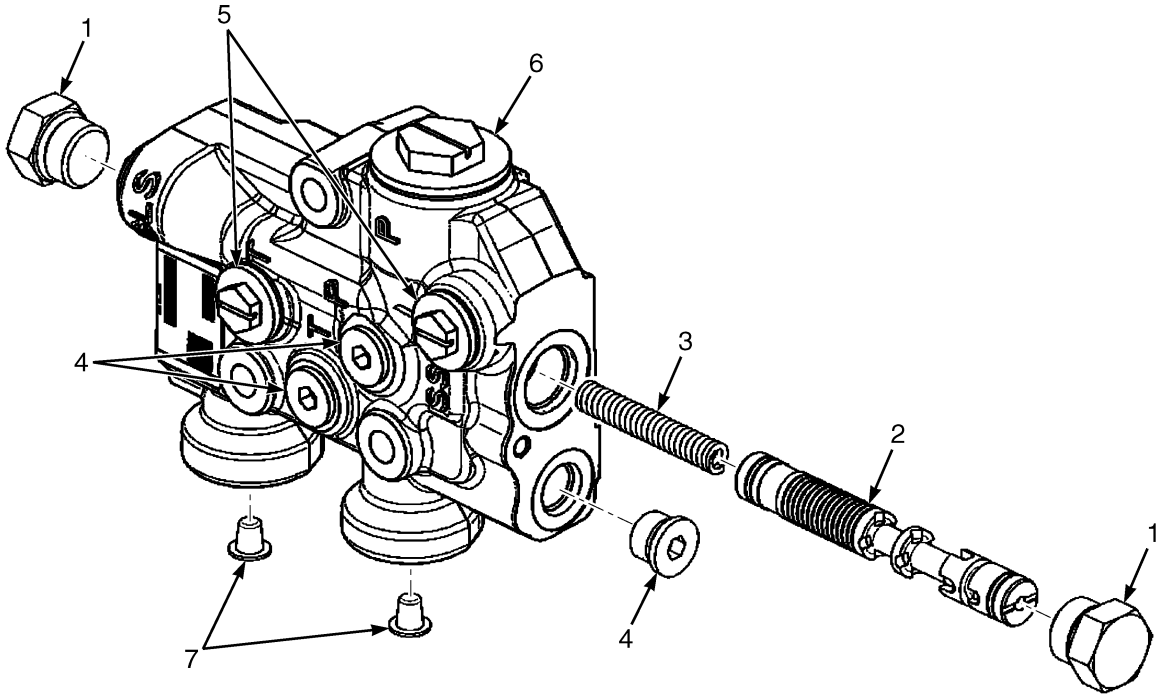

BP140368

ITEM	PART NO.	DESCRIPTION	QTY
	~~4297957~~		
	4363455	Valve Section	1
1	4298008	Plug	2
2	. . . . .	Spool	1
3	. . . . .	Spring	1
4	~~4298009~~		
	4325392	Plug	3
5	. . . . .	Plug (Seal)	3
6	. . . . .	Plug (Seal)	1
7	. . . . .	Plug (Seal)	2

HYDRAULIC CONTROL VALVE ASSEMBLY (FIGURE 16-20)

TILT AND AUXILIARY SECTION — MANUAL HYDRAULICS

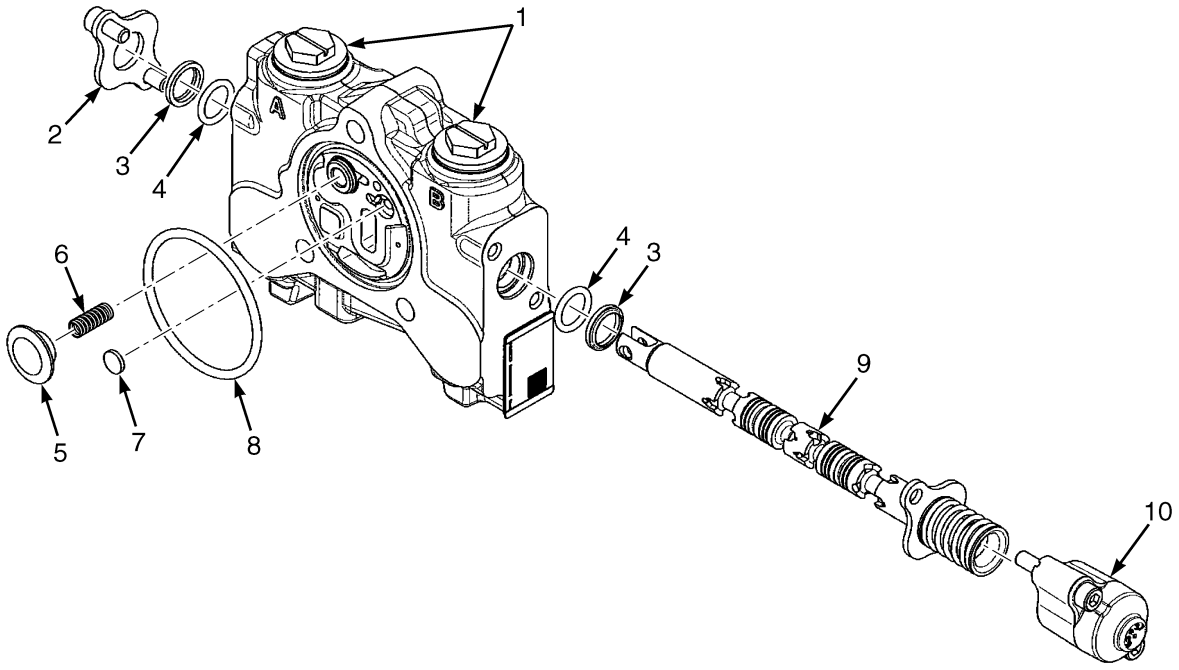

BP140363

ITEM	PART NO.	DESCRIPTION	QTY
	4297965	Valve Section (Tilt) (H40A-H50AS)	1
	4297966	Valve Section (Tilt) (H60A-H70A)	1
	4297960	Valve Section (Auxiliary)	1
1	. . . . .	Plug	2
2	4297990	Kit - Seal Plate	1
3	. . . . .	Wiper	2
4	. . . . .	O-Ring	2
5	. . . . .	Plug	1
6	. . . . .	Spring	1
7	. . . . .	Shuttle	1
8	. . . . .	O-Ring	1
9	. . . . .	Spool	1
10	4297998	Spool End	1
	4298006	Kit-Seal (Manual Valve)	1

See Service Manual for service procedures.
©2026 HYSTER COMPANY

HYDRAULIC CONTROL VALVE ASSEMBLY (FIGURE 16-21)

TILT AND AUXILIARY SECTION — ELECTRONIC HYDRAULICS

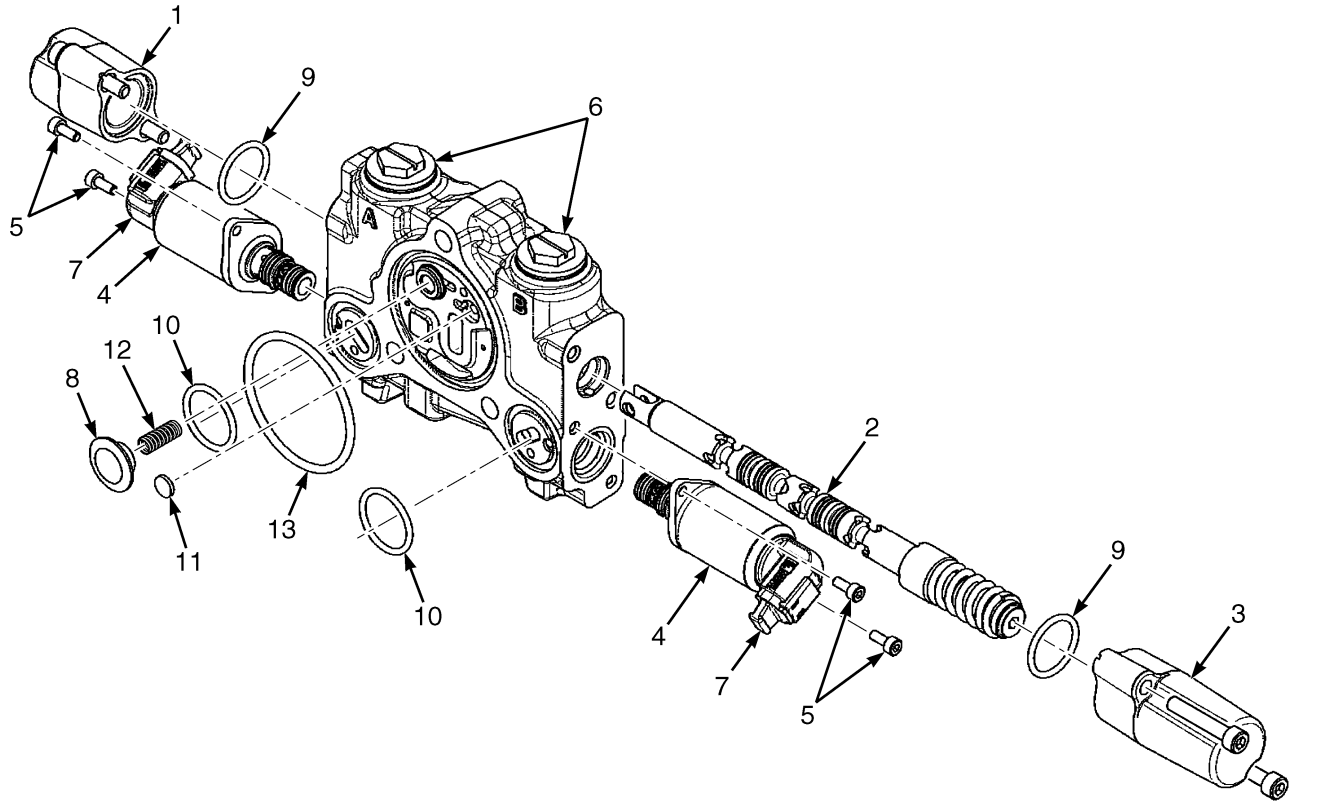

BP140369

ITEM	PART NO.	DESCRIPTION	QTY
	4297962	Valve Section (Auxiliary 1)	1
	4297964	Valve Section (Auxiliary 2)	1
	4297967	Valve Section (Tilt)	1
	4297968	Valve Section (Tilt)	1
1	4297993	End Cap (Non-Spring Side, 3 Position)	1
2	. . . . .	Spool	1
3	4297994	End Cap (Spring Side)	1
4	4298010	Valve (Solenoid-Cartridge (90 DEG))	2
5	1578878	Capscrew	4
6	. . . . .	Plug (Seal)	2
7	. . . . .	Plug (Seal)	2
8	. . . . .	Plug	1
9	. . . . .	O-Ring	2
10	. . . . .	O-Ring	2
11	. . . . .	Shuttle	1
12	. . . . .	Spring	1
13	. . . . .	O-Ring	1
	4298007	Kit-Seal (Includes Items 9-13)	1

HYDRAULIC CONTROL VALVE ASSEMBLY (FIGURE 16-22)

TILT SECTION WITH VDP — MANUAL HYDRAULICS

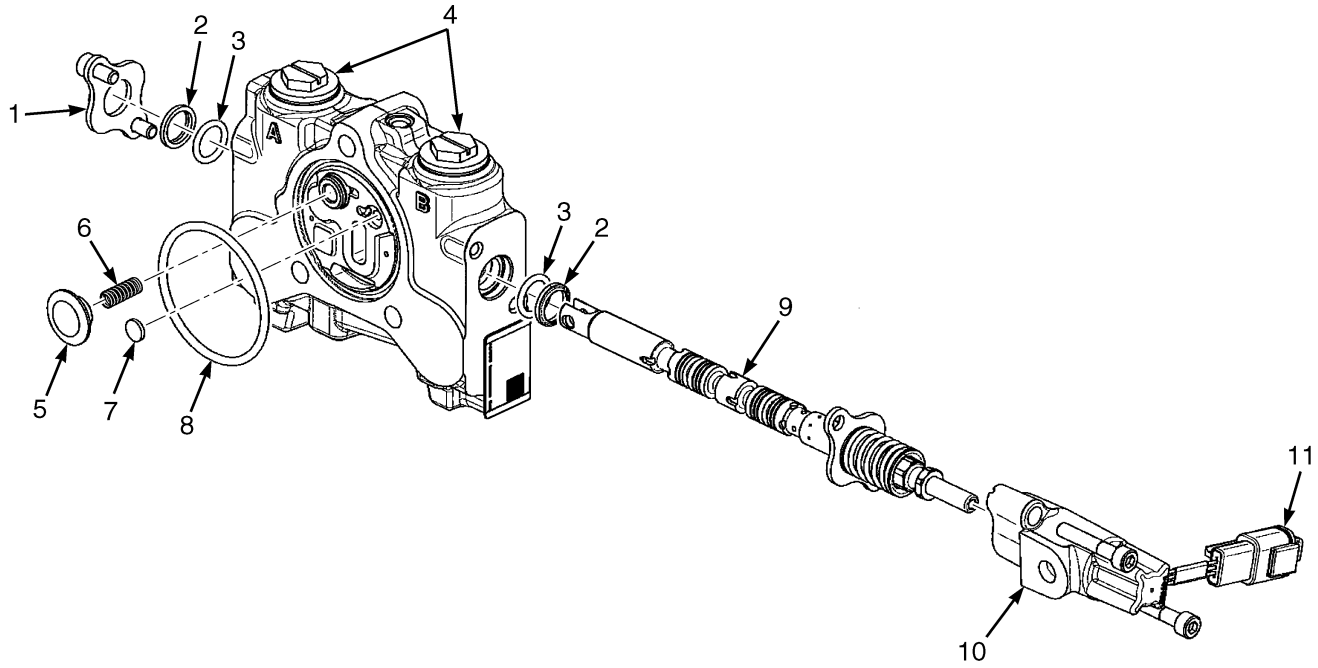

BP140366

ITEM	PART NO.	DESCRIPTION	QTY
	4297971	Valve Section (Tilt) (220 BAR)	1
	4297972	Valve Section (Tilt) (240 BAR)	1
1	4297990	Kit - Seal Plate	1
2	. . . . .	Wiper	2
3	. . . . .	O-Ring	2
4	. . . . .	Plug	2
5	. . . . .	Plug	1
6	. . . . .	Spring	1
7	. . . . .	Shuttle	1
8	. . . . .	O-Ring	1
9	. . . . .	Spool	1
10	4297997	Spool End	1
11	. . . . .	Plug	1
	4298006	Kit-Seal (Manual Valve)	1

©2026 HYSTER COMPANY

HYDRAULIC CONTROL VALVE ASSEMBLY (FIGURE 16-23)

LIFT AND LOWER SECTION — MANUAL HYDRAULICS

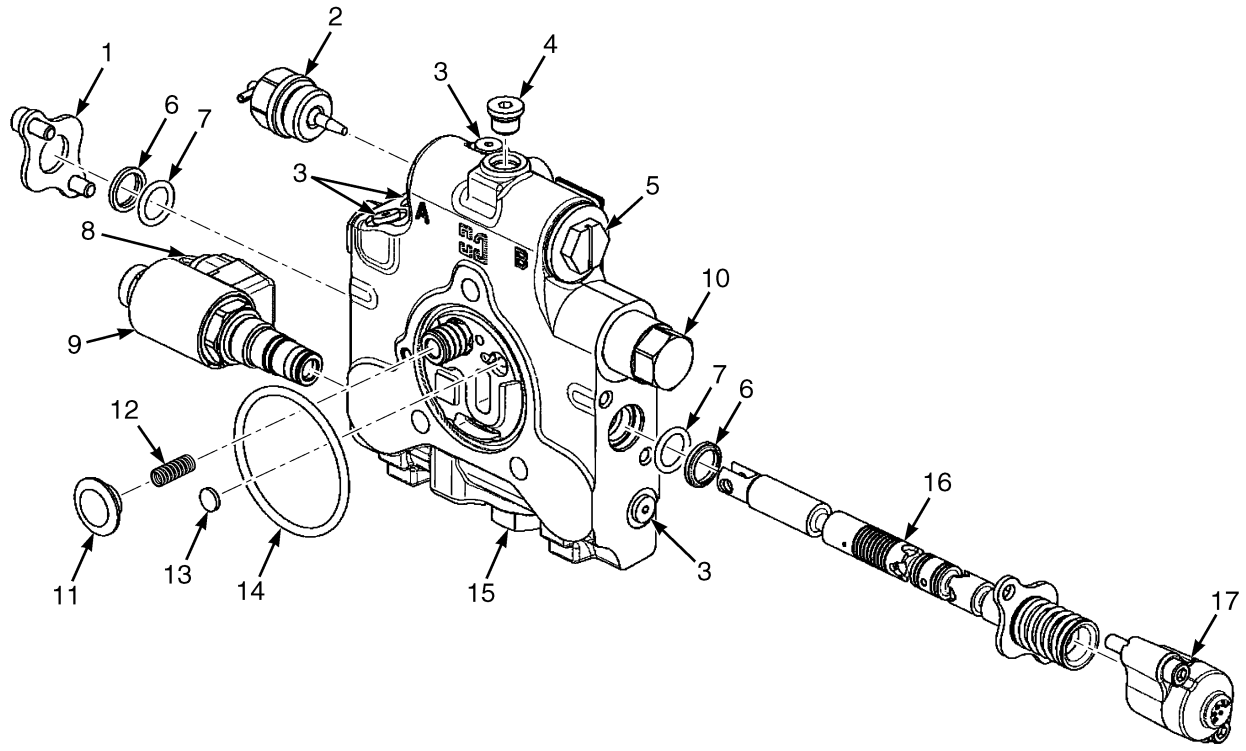

BP140364

ITEM	PART NO.	DESCRIPTION	QTY
	4297973	Valve Section (Lift/Lower) (H40A-H50AS)	1
	4297974	Valve Section (Lift/Lower) (H60A-H70A)	1
1	4297990	Kit - Seal Plate	1
2	4298012	Plug (Shut-Off)	1
3	. . . . .	Plug	4
4	. . . . .	Plug	1
5	14591	Plug	1
5	16481	O-Ring	1
6	. . . . .	Wiper	2
7	. . . . .	O-Ring	2
8	. . . . .	Plug	1
9	4297991	Solenoid	1
10	. . . . .	Spool Assy - Compensator	1
11	. . . . .	Plug	1
12	. . . . .	Spring	1
13	. . . . .	Shuttle	1
14	. . . . .	O-Ring	1
15	. . . . .	Check Valve Assembly	1
16	. . . . .	Spool	1
17	4297998	Spool End	1
	4298006	Kit-Seal (Manual Valve)	1

HYDRAULIC CONTROL VALVE ASSEMBLY (FIGURE 16-24)

LIFT SECTION — ELECTRONIC HYDRAULICS

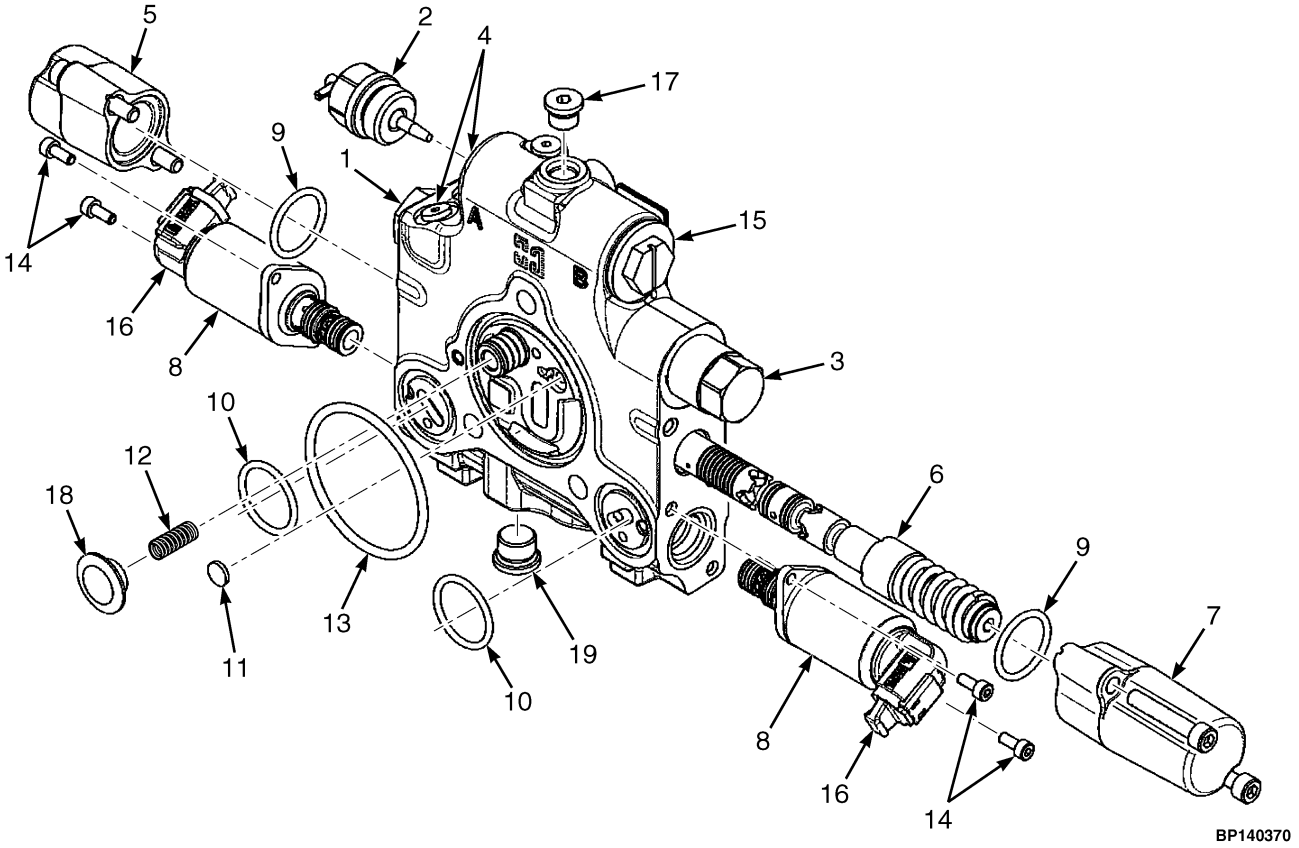

©2026 HYSTER COMPANY

HYDRAULIC CONTROL VALVE ASSEMBLY

LIFT SECTION – ELECTRONIC HYDRAULICS

ITEM	PART NO.	DESCRIPTION	QTY
	4297975	Valve Section (Lift)	1
	4297976	Valve Section (Lift)	1
1	. . . . .	Check Valve Assembly	1
2	4298012	Plug (Shut-Off)	1
3	. . . . .	Spool Assy - Compensator	1
4	. . . . .	Plug Assembly	3
5	4297993	End Cap (Non-Spring Side, 3 Position)	1
6	. . . . .	Spool	1
7	4297994	End Cap (Spring Side)	1
8	4298010	Valve (Solenoid-Cartridge (90 DEG))	2
9	. . . . .	O-Ring	2
10	. . . . .	O-Ring	2
11	. . . . .	Shuttle	1
12	. . . . .	Spring	1
13	. . . . .	O-Ring	1
14	1578878	Capscrew	4
15	. . . . .	Plug (Seal)	1
16	. . . . .	Plug (Seal)	2
17	14591	Plug	1
17	16481	O-Ring	1
18	. . . . .	Plug	1
19	~~4298009~~		
	4325392	Plug	1
	4298007	Kit-Seal (Includes Items 9-13)	1

HYDRAULIC CONTROL VALVE ASSEMBLY (FIGURE 16-25)

OUTLET SECTION — MANUAL AND ELECTRONIC HYDRAULICS

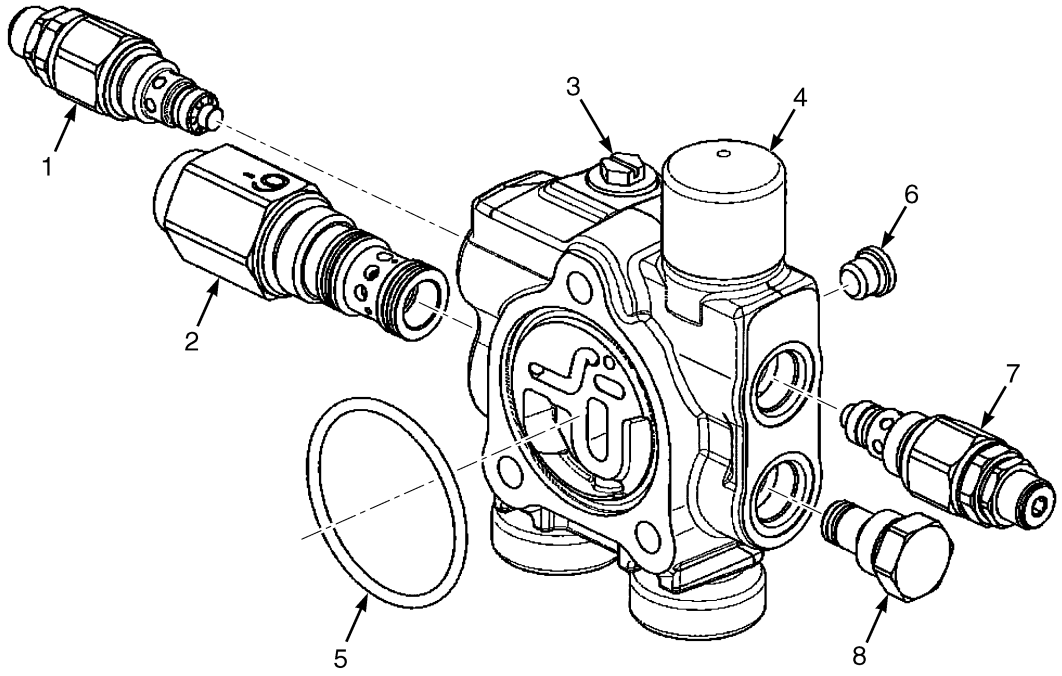

ITEM	PART NO.	DESCRIPTION	QTY
	a 4297980	Valve Section (Outlet)	1
	a ~~4297981~~		
	4337831	Valve Section (Outlet) (Alternate Part)	1
	b 4297984	Valve Section (Outlet)	1
1	4298000	Relief Valve (180 BAR)	1
2	**a** 4298004	Unloader Valve	1
2	**b** 4298005	Plug	1
3	. . . . .	Plug	1
4	. . . . .	Boot	1
5	57664	O-Ring	1
6	**a** 14591	Plug	1
6	16481	O-Ring	1
7	4298002	Relief Valve (240 BAR)	1
8	4298003	Plug	1

FOOTNOTES:

a w/ Gear Pump

b w/ VDP

©2026 HYSTER COMPANY

HYDRAULIC CONTROL VALVE ASSEMBLY (FIGURE 16-26)

WITH VDP, WITH HFD — MANUAL HYDRAULICS (→ 10/2022)

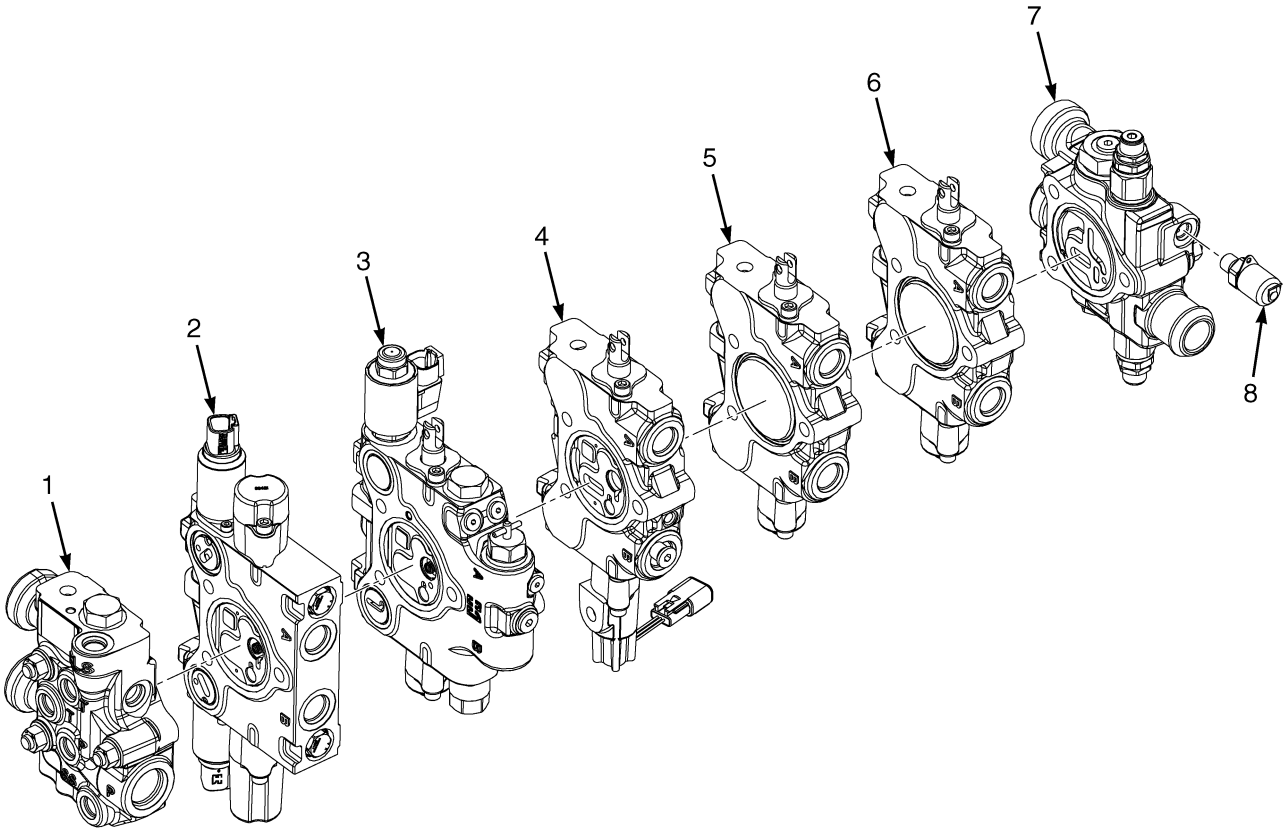

KEY:
A: H40A-H50A
B: H60A-H70A

ITEM	PART NO.	DESCRIPTION	QTY A	QTY B
	4683986	Hyd Control Valve (4 Function with VDP and HFD)	1	..
	4683990	Hyd Control Valve (4 Function with VDP and HFD)	..	1
	4297989	Tie Rod	1	1
	4311819	Tie Rod	3	3
	188534	Nut	6	6
1	4297958	Valve Section (Inlet w/FD) (☞Figure 16-28)	1	1
2	4297970	Valve Section (Fan Drive) (☞Figure 16-29)	1	1
3	4297977	Valve Section (Lift (FD)) (☞Figure 16-30)	1	..
3	4297978	Valve Section (Lift (FD)) (☞Figure 16-30)	..	1
4	4297971	Valve Section (Tilt) (220 BAR) (☞Figure 16-22)	1	..
4	4297972	Valve Section (Tilt) (240 BAR) (☞Figure 16-22)	..	1
5	4297960	Valve Section (Auxiliary) (Aux 1) (☞Figure 16-20)	1	1
6	4297960	Valve Section (Auxiliary) (Aux 2) (☞Figure 16-20)	1	1
7	4297984	Valve Section (Outlet)	1	1
8	2061646	Fitting (Diagnostic)	1	1

©2026 HYSTER COMPANY

HYDRAULIC CONTROL VALVE ASSEMBLY (FIGURE 16-27)

WITH VDP, WITH HFD — MANUAL HYDRAULICS (11/2022 →)

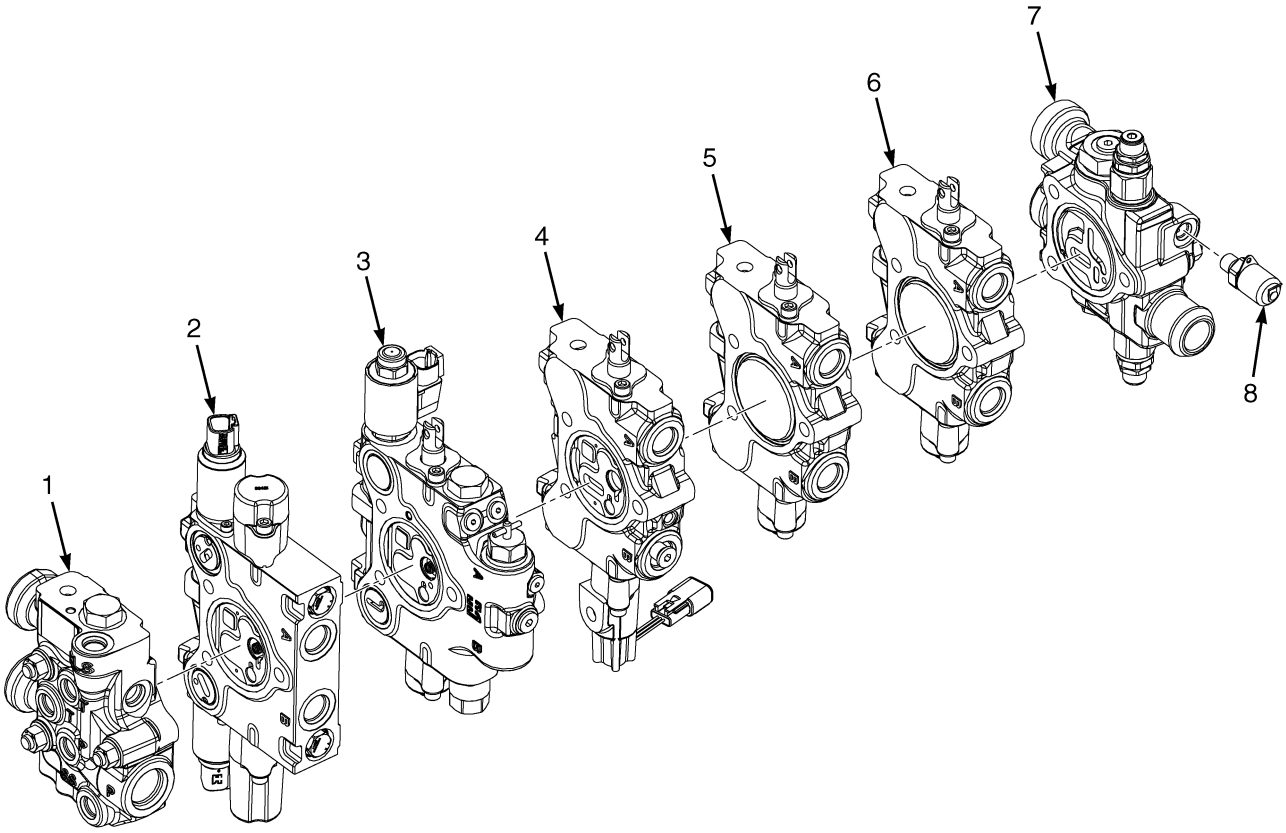

KEY:
A: H40A-H50A
B: H60A-H70A

ITEM	PART NO.	DESCRIPTION	QTY A	QTY B
	4727028	Hyd Control Valve (4 Function with VDP and HFD)	1	..
	4727029	Hyd Control Valve (4 Function with VDP and HFD)	..	1
1	. . . . .	Inlet Valve	1	1
2	. . . . .	Fan Drive Valve	1	1
3	. . . . .	Lift/Lower Valve	1	1
4	. . . . .	Tilt Valve	1	1
5	. . . . .	Aux 1 Valve	1	1
6	. . . . .	Aux 2 Valve	1	1
7	. . . . .	Outlet Valve	1	1
8	2061646	Fitting (Diagnostic)	1	1

©2026 HYSTER COMPANY

HYDRAULIC CONTROL VALVE ASSEMBLY (FIGURE 16-28)

INLET SECTION WITH VDP, WITH HFD — MANUAL HYDRAULICS

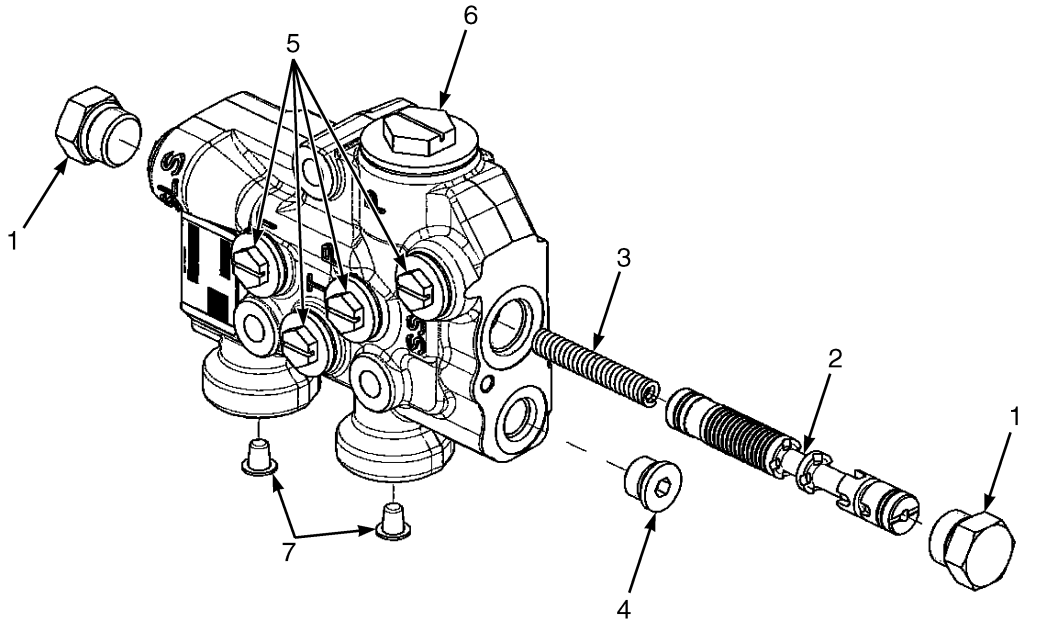

ITEM	PART NO.	DESCRIPTION	QTY
	4297958	Valve Section (Inlet w/FD)	1
1	4298008	Plug	2
2	. . . . .	Spool	1
3	. . . . .	Spring	1
4	~~4298009~~		
	4325392	Plug	1
5	. . . . .	Plug	5
6	. . . . .	Plug	1
7	. . . . .	Plug	2

HYDRAULIC CONTROL VALVE ASSEMBLY (FIGURE 16-29)

FAN DRIVE SECTION WITH VDP, WITH HFD — MANUAL HYDRAULICS

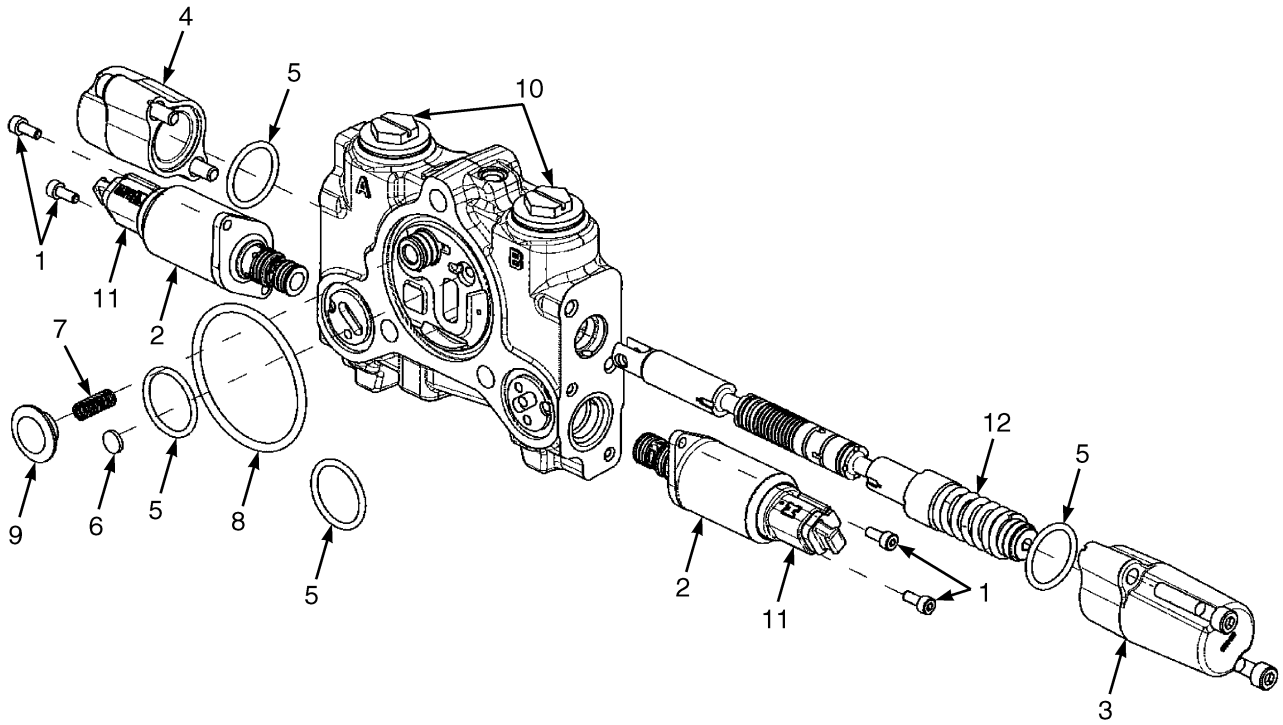

BP140378

ITEM	PART NO.	DESCRIPTION	QTY
	4297970	Valve Section (Fan Drive)	1
1	1578878	Capscrew	4
2	4298011	Valve (Solenoid-Cartridge)	2
3	4297994	End Cap (Spring Side)	1
4	4297993	End Cap (Non-Spring Side, 3 Position)	1
5	. . . . .	O-Ring	4
6	. . . . .	Shuttle	1
7	. . . . .	Spring	1
8	. . . . .	O-Ring	1
9	. . . . .	Plug	1
10	. . . . .	Plug	2
11	. . . . .	Plug	2
12	. . . . .	Spool Assembly	1
	a 4322857	Relief Valve	1
	4298007	Kit-Seal	1

FOOTNOTES:

a Not Illustrated

©2026 HYSTER COMPANY

HYDRAULIC CONTROL VALVE ASSEMBLY (FIGURE 16-30)

LIFT SECTION WITH VDP, WITH HFD — MANUAL HYDRAULICS

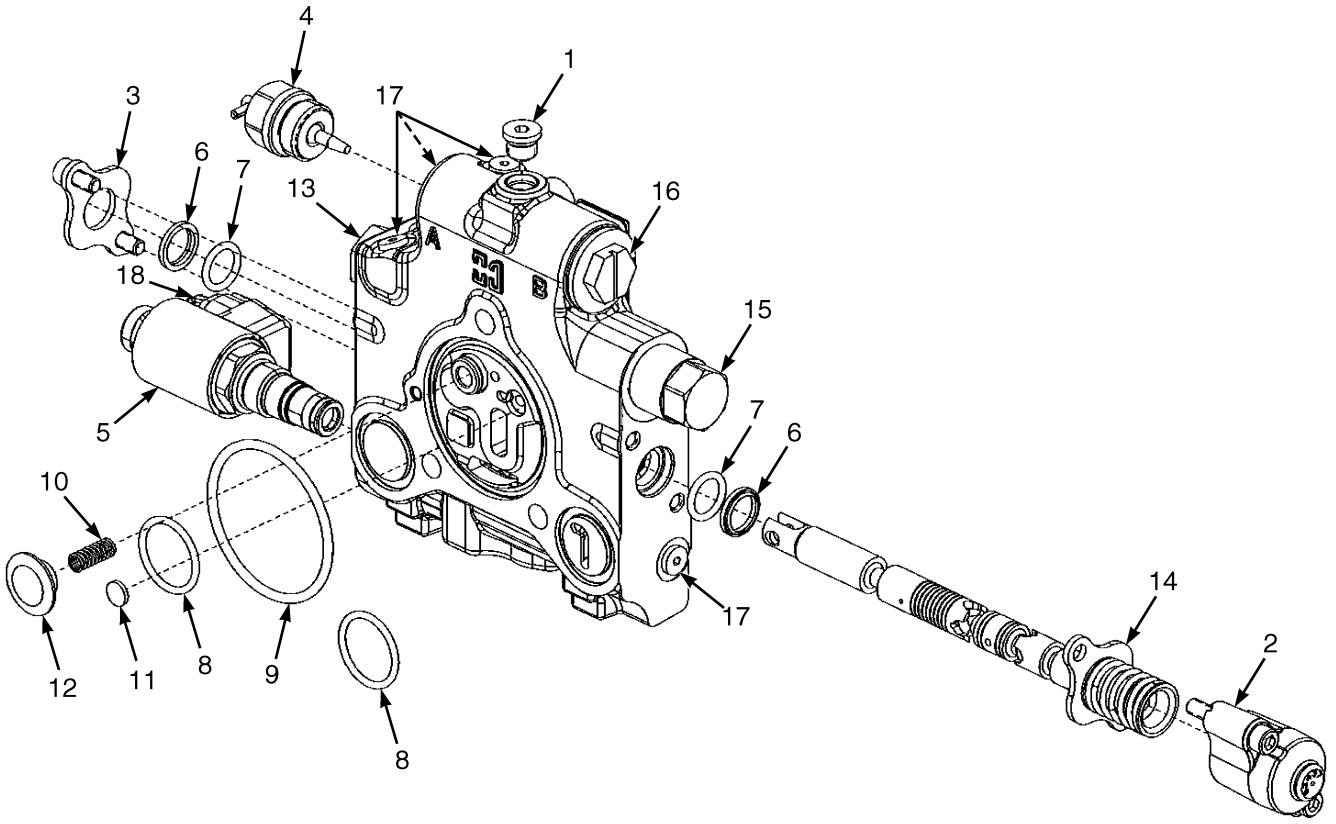

BP140379

ITEM	PART NO.	DESCRIPTION	QTY
	4297977	Valve Section (Lift (FD)) (H40A-H50A)	1
	4297978	Valve Section (Lift (FD)) (H60A-H70A)	1
1	14591	Plug	1
1	16481	O-Ring	1
2	4297998	Spool End	1
3	4297990	Kit - Seal Plate	1
4	4298012	Plug (Shut-Off)	1
5	4297991	Solenoid	1
6	. . . . .	Wiper	2
7	. . . . .	O-Ring	2
8	. . . . .	O-Ring	2
9	. . . . .	O-Ring	1
10	. . . . .	Spring	1
11	. . . . .	Shuttle	1
12	. . . . .	Plug	1
13	. . . . .	Check Valve Assembly	1
14	. . . . .	Spool Assembly	1
15	. . . . .	Spool Assembly - Compensator	1
16	. . . . .	Plug	1
17	. . . . .	Plug Assembly	4
18	. . . . .	Plug	1
	4298006	Kit-Seal (Manual Valve)	1

©2026 HYSTER COMPANY

HYDRAULIC CONTROL VALVE ASSEMBLY (FIGURE 16-31)

WITH VDP, WITH HFD — ELECTRONIC HYDRAULICS (→ 10/2022)

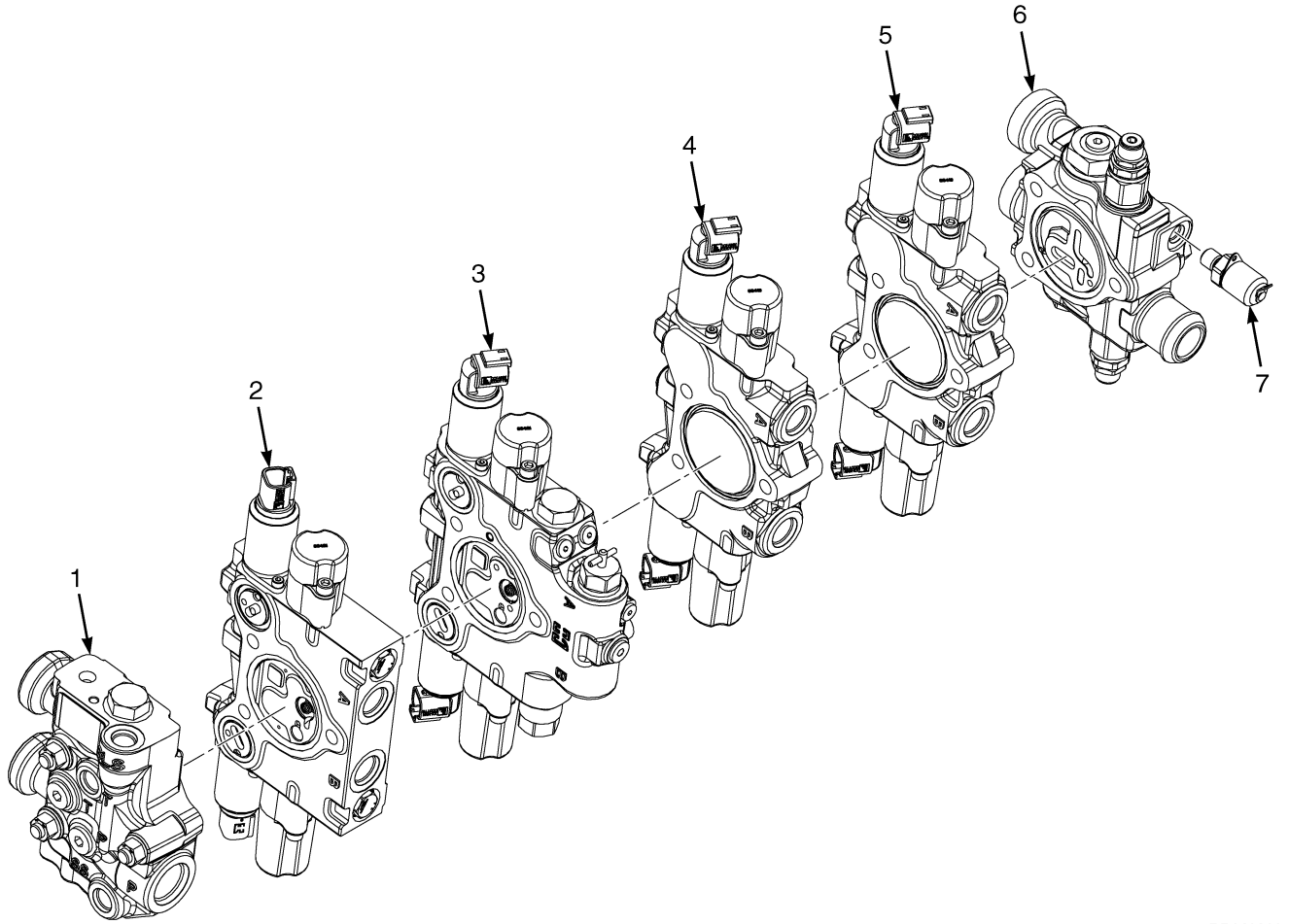

KEY:
A: 3 Function, H40A-H50A
B: 4 Function, H40A-H50A
C: 3 Function, H60A-H70A
D: 4 Function, H60A-H70A

ITEM	PART NO.	DESCRIPTION	QTY A	QTY B	QTY C	QTY D
	4683987	Hyd Control Valve (3 Function with VDP and HFD)	1	..	..	..
	4683991	Hyd Control Valve (3 Function with VDP and HFD)	..	..	1	..
	4297988	Tie Rod	1	..	1	..
	4311818	Tie Rod	3	..	3	..
	188534	Nut	6	..	6	..
	4683988	Hyd Control Valve (4 Function with VDP and HFD)	..	1	..	..
	4683992	Hyd Control Valve (4 Function with VDP and HFD)	..	..	..	1
	4297989	Tie Rod	..	1	..	1
	4311819	Tie Rod	..	3	..	3
	188534	Nut	..	6	..	6
1	~~4297957~~					
	4363455	Valve Section (☞Figure 16-19).....	1	1	1	1
2	~~4297969~~					
	4322853	Valve Section (Fan Drive) (☞Figure 16-33).....	1	1	1	1
3	4297975	Valve Section (Lift) (☞Figure 16-24).....	1	1	..	..
3	4297976	Valve Section (Lift) (☞Figure 16-24).....	..	..	1	1
4	4297967	Valve Section (Tilt) (☞Figure 16-21).....	1	1	..	..
4	4297968	Valve Section (Tilt) (☞Figure 16-21).....	..	..	1	1
5	4297964	Valve Section (Auxiliary 2) (☞Figure 16-21).....	1	..	1	..
5	4297962	Valve Section (Auxiliary 1) (☞Figure 16-21).....	..	1	..	1
6	4297984	Valve Section (Outlet)	1	1	1	1
7	2061646	Fitting (Diagnostic)	1	1	1	1

©2026 HYSTER COMPANY

HYDRAULIC CONTROL VALVE ASSEMBLY (FIGURE 16-32)

WITH VDP, WITH HFD — ELECTRONIC HYDRAULICS (11/2022 →)

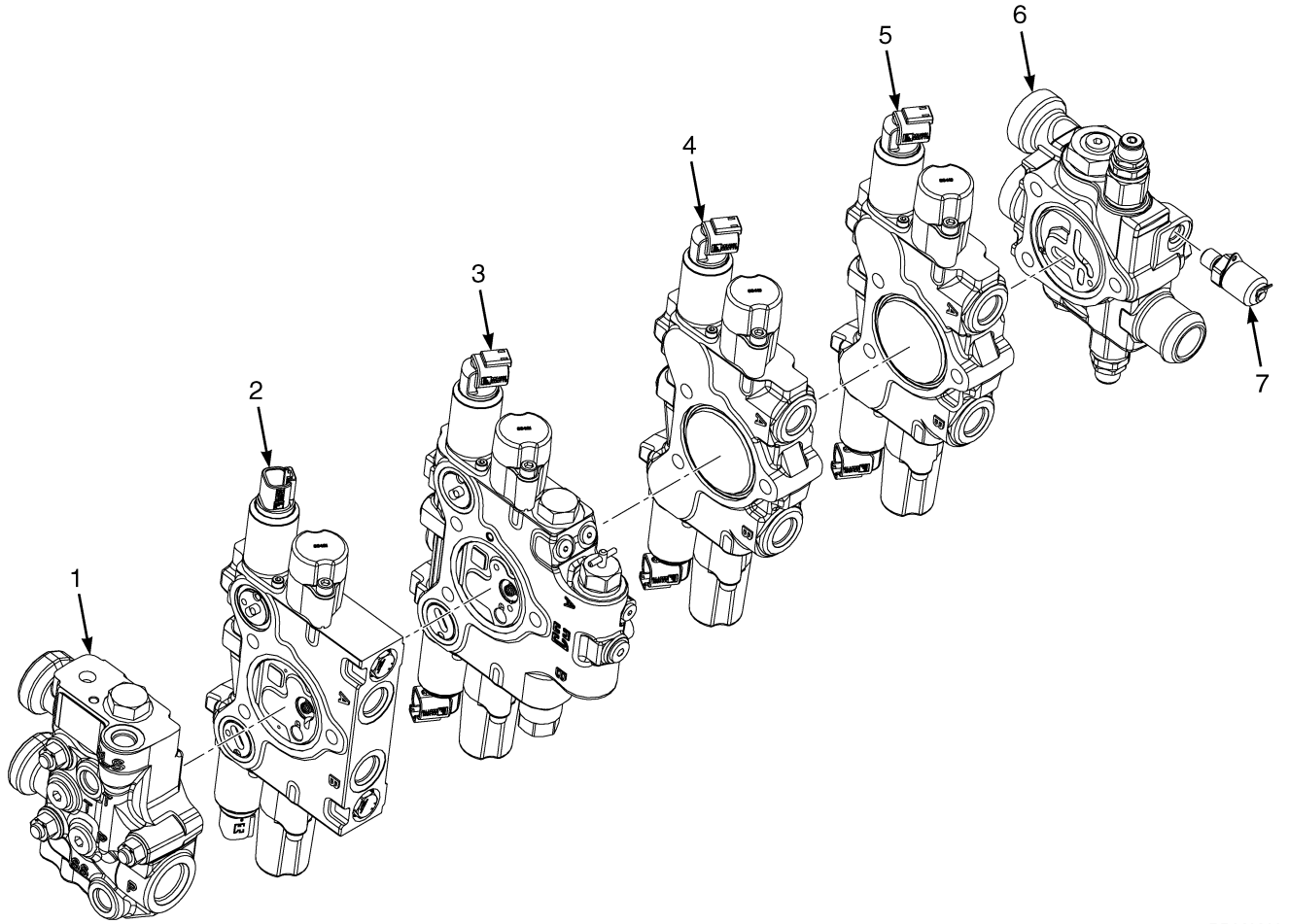

KEY:
A: 3 Function, H40A-H50A
B: 4 Function, H40A-H50A
C: 3 Function, H60A-H70A
D: 4 Function, H60A-H70A

ITEM	PART NO.	DESCRIPTION	QTY A	QTY B	QTY C	QTY D
	4727044	Hyd Control Valve (3 Function with VDP and HFD)	1	..	..	..
	4727046	Hyd Control Valve (3 Function with VDP and HFD)	..	..	1	..
	4727045	Hyd Control Valve (4 Function with VDP and HFD)	..	1	..	..
	4727047	Hyd Control Valve (4 Function with VDP and HFD)	..	..	..	1
1	. . . . .	Inlet Valve	1	1	1	1
2	. . . . .	Fan Drive Valve	1	1	1	1
3	. . . . .	Lift/Lower Valve	1	1	1	1
4	. . . . .	Tilt Valve	1	1	1	1
5	. . . . .	Aux 2 Valve	1	..	1	..
6	. . . . .	Aux 1 Valve	..	1	..	1
7	2061646	Fitting (Diagnostic)	1	1	1	1

©2026 HYSTER COMPANY

HYDRAULIC CONTROL VALVE ASSEMBLY (FIGURE 16-33)

FAN DRIVE SECTION WITH VDP, WITH HFD — ELECTRONIC HYDRAULICS

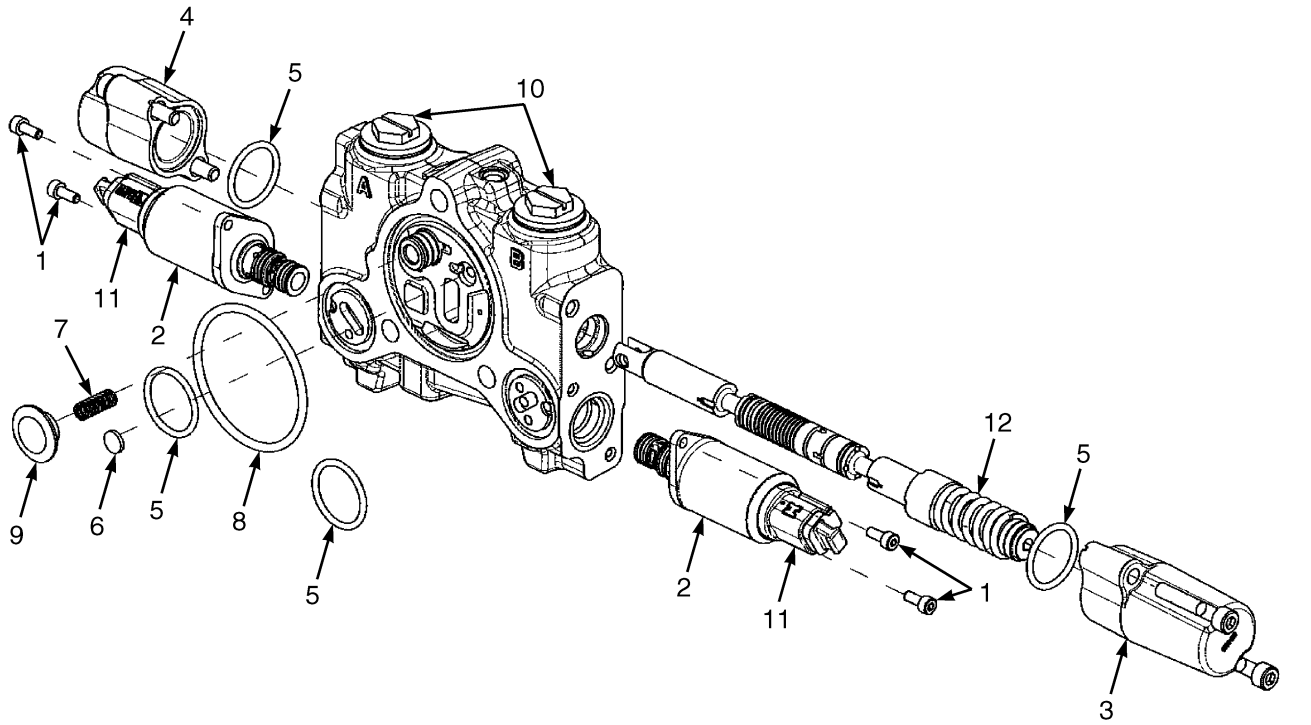

BP140378

ITEM	PART NO.	DESCRIPTION	QTY
	~~4297969~~		
	4322853	Valve Section (Fan Drive)	1
1	1578878	Capscrew	4
2	4298010	Valve (Solenoid-Cartridge (90 DEG))	2
3	4297994	End Cap (Spring Side)	1
4	4297993	End Cap (Non-Spring Side, 3 Position)	1
5	. . . . .	O-Ring	4
6	. . . . .	Shuttle	1
7	. . . . .	Spring	1
8	. . . . .	O-Ring	1
9	. . . . .	Plug	1
10	. . . . .	Plug	2
11	. . . . .	Plug	2
12	. . . . .	Spool Assembly	1
	4298007	Kit-Seal	1

HYDRAULIC HOSES (FIGURE 16-34)

HOIST AND AUXILIARY — 3FFL AND 2LFL

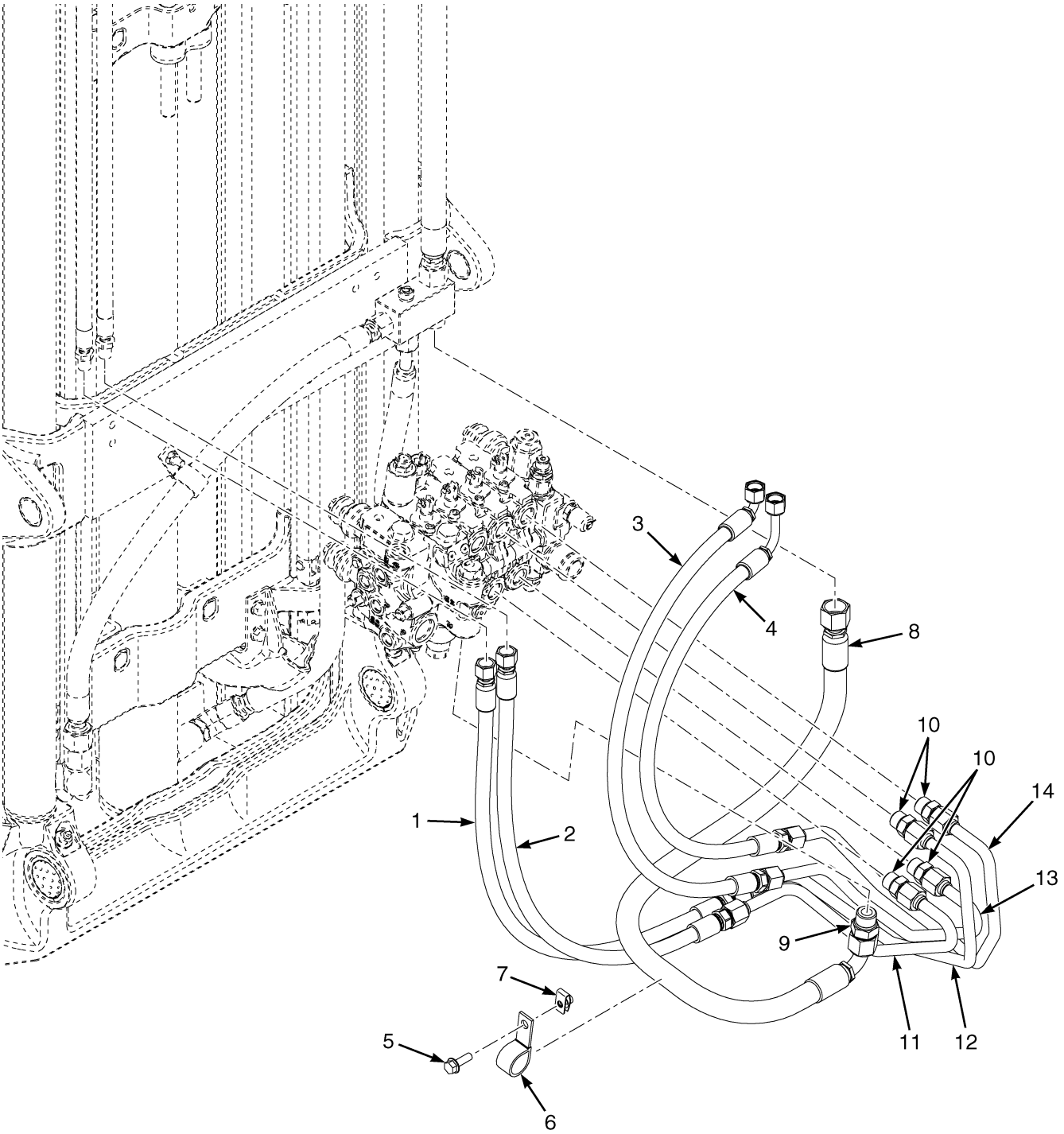

BP151032

©2026 HYSTER COMPANY

HYDRAULIC HOSES

HOIST AND AUXILIARY – 3FFL AND 2LFL

ITEM	PART NO.	DESCRIPTION	QTY
1	4701491	Hose Assy - Aux 3A	1
2	4705768	Hose Assy - Aux 3B	1
2	4715468	Hose Assy - Aux 3B (Alternate Part)	1
3	4700148	Hose Assy - Aux 4B	1
4	4700149	Hose Assy - Aux 4A	1
5	1510113	Capscrew	1
6	1310611	Clamp	1
7	1480237	Nut (Foldover)	1
8	4682908	Hose Assy - hoist (Dry Brake Axle)	1
8	4714901	Hose Assy (Hoist) (Dry Brake Axle) (Alternate Part)	1
8	4716283	Hose And Tube Assy (Wet Brake Axle)	1
9	1486749	Fitting (Dry Brake Axle)	1
9	4328708	Fitting (90 degree, elbow, long) (Wet Brake Axle)	1
10	~~6996681~~		
	1473887	Fitting	4
10	~~1495113~~		
	265731	O-Ring	1
11	4691188	Tube Assy - Aux 3B	1
12	4691189	Tube Assy - Aux 3A	1
13	4691190	Tube Assy - Aux 4B	1
14	4691191	Tube Assy - Aux 4A	1

HYDRAULIC HOSES (FIGURE 16-35)

HOIST AND AUXILIARY — 2FFL

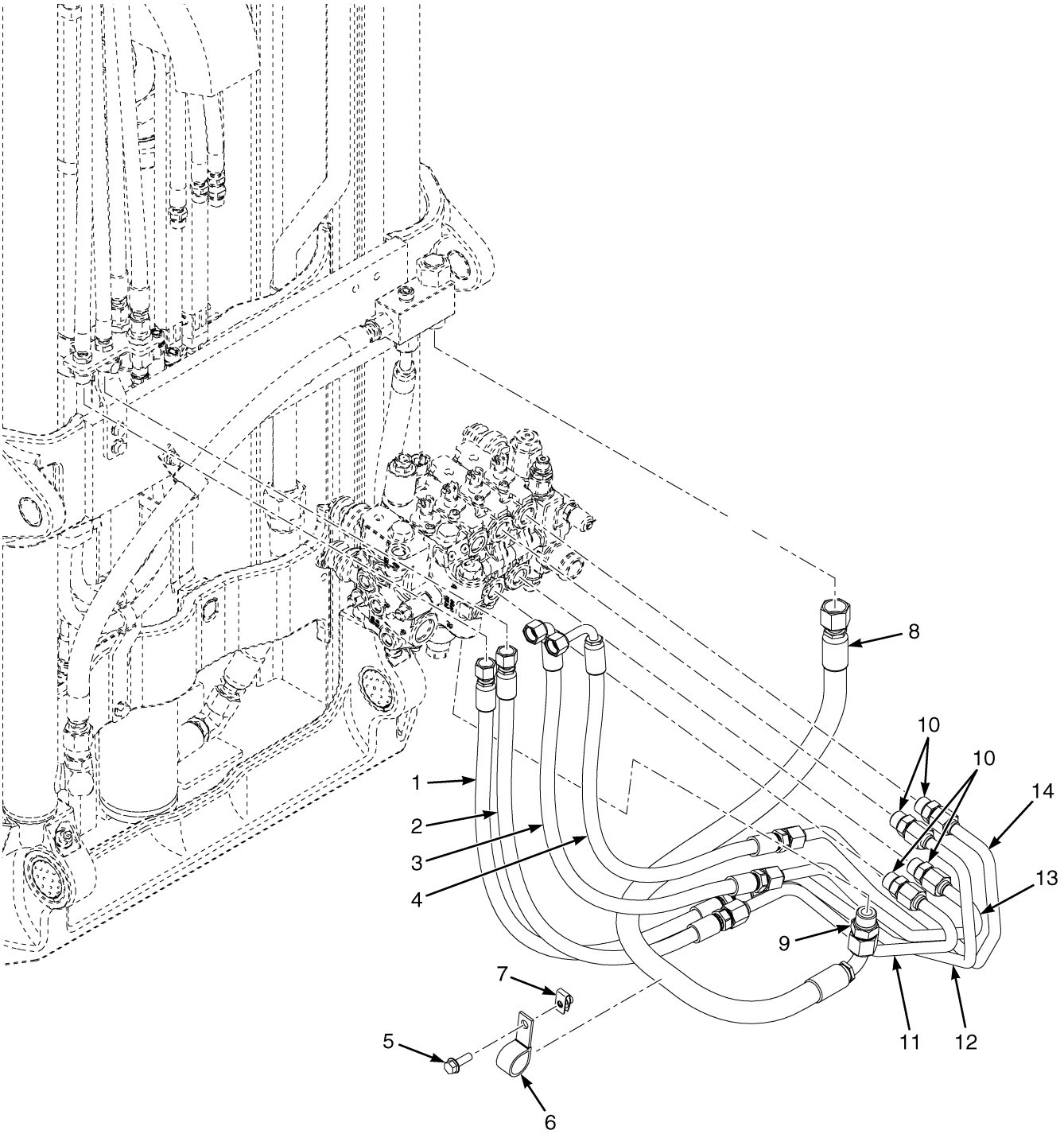

BP151033

©2026 HYSTER COMPANY

HYDRAULIC HOSES

HOIST AND AUXILIARY – 2FFL

ITEM	PART NO.	DESCRIPTION	QTY
1	4701491	Hose Assy - Aux 3A	1
2	4705768	Hose Assy - Aux 3B	1
2	4715468	Hose Assy - Aux 3B (Alternate Part)	1
3	4700150	Hose Assy - Aux 4B	1
4	4700149	Hose Assy - Aux 4A	1
5	1510113	Capscrew	1
6	1310611	Clamp	1
7	1480237	Nut (Foldover)	1
8	4682908	Hose Assy - hoist (DBA)	1
8	4714901	Hose Assy (Hoist) (DBA) (Alternate Part)	1
8	4716283	Hose And Tube Assy (WBA)	1
9	1486749	Fitting (DBA)	1
9	4328708	Fitting (90 degree, elbow, long) (WBA)	1
10	~~6996681~~		
	1473887	Fitting	4
10	~~1495113~~		
	265731	O-Ring	1
11	4691188	Tube Assy - Aux 3B	1
12	4691189	Tube Assy - Aux 3A	1
13	4691190	Tube Assy - Aux 4B	1
14	4691191	Tube Assy - Aux 4A	1

©2026 HYSTER COMPANY

TILT CYLINDERS (FIGURE 16-36)

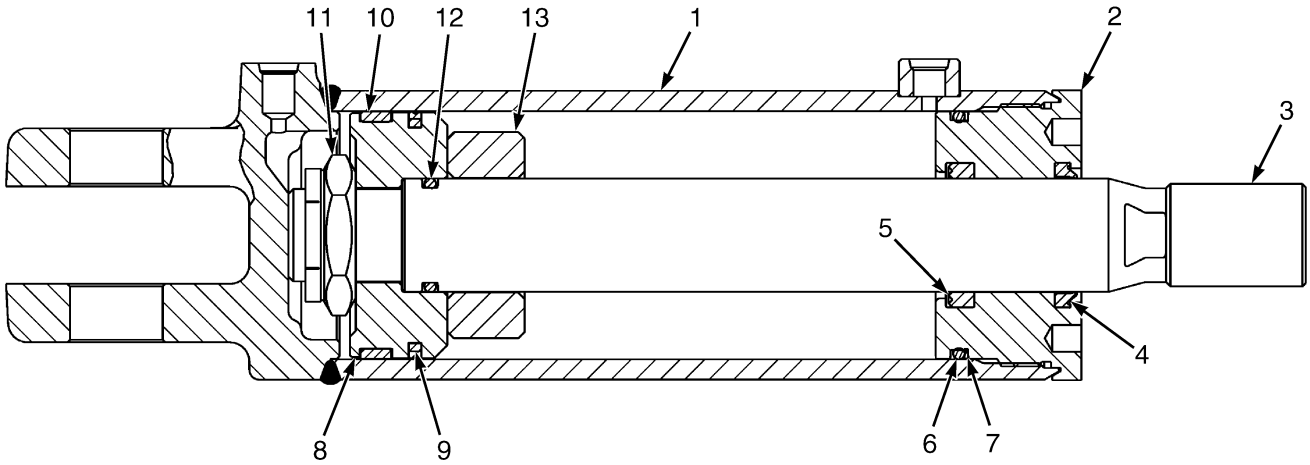

BP230031

©2026 HYSTER COMPANY

TILT CYLINDERS

KEY:
A: H40A-H50A
B: H60A-H70A

ITEM	PART NO.	DESCRIPTION	QTY A	QTY B
	4671931	Tilt Cylinder-Mast (6 Fwd / 6 Back)	2	..
	4671786	Tilt Cylinder-Mast (10 Fwd / 6 Back)	..	2
	4671787	Tilt Cylinder-Mast (6 Fwd / 6 Back)	..	2
1	4671935	Tube Wldmt-Cylinder	1	..
1	4671951	Tube Wldmt-Cylinder	..	1
2	1338744	Gland	1	..
2	1527520	Gland	..	1
3	4653425	Cylinder Rod	1	..
3	4653479	Cylinder Rod	..	1
4	1383062	Rod Wiper	1	..
4	1383063	Rod Wiper	..	1
5	1381082	Rod Seal	1	..
5	1381083	Rod Seal	..	1
6	46388	O-Ring	1	..
6	268619	O-Ring	..	1
7	154375	Back-Up Ring	1	..
7	147973	Back-Up Ring	..	1
8	1338741	Piston	1	..
8	1381078	Piston	..	1
9	2044370	Piston Seal	1	..
9	2044371	Piston Seal	..	1
10	199852	Wear Ring	..	1
11	2302899	Locknut	1	..
11	2070018	Locknut	..	1
12	39374	O-Ring	1	..
12	237812	O-Ring	..	1
13	4653649	Spacer	1	..
13	4041255	Spacer	..	1
	1492644	Kit-Seal (Tilt Cylinder)	1	..
	1527719	Kit-Seal (Tilt Cylinder)	..	1

TILT HYDRAULICS (FIGURE 16-37)
WITHOUT RTST

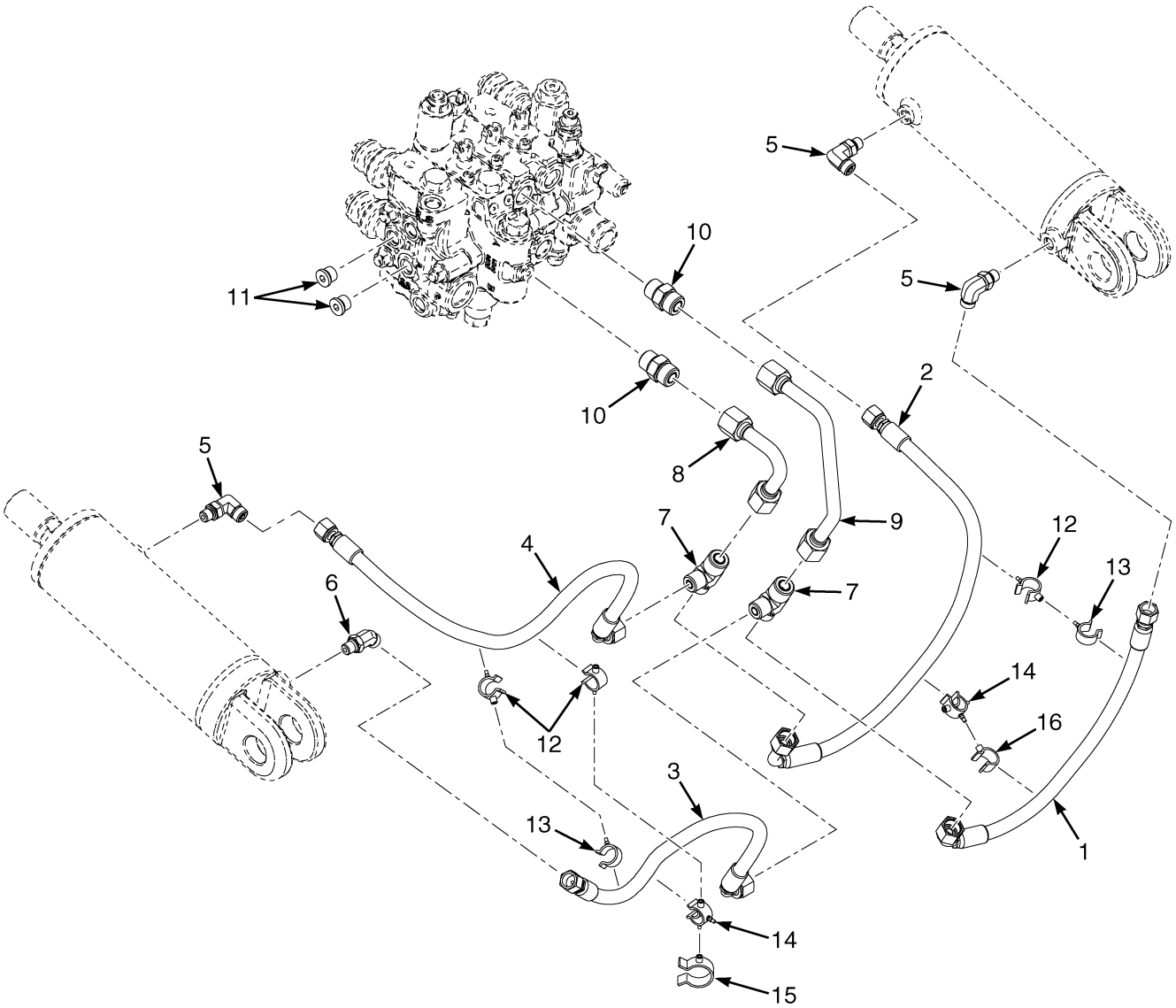

BP230029

©2026 HYSTER COMPANY

TILT HYDRAULICS
WITHOUT RTST

ITEM	PART NO.	DESCRIPTION	QTY
1	4682923	Hose Assy (RH - Base)	1
2	4682924	Hose Assy (RH - Rod)	1
3	4682925	Hose Assy (LH - Base)	1
4	4682926	Hose Assy (LH - Rod)	1
5	1487058	Fitting	3
6	1516197	Fitting	1
7	4261957	T-Fitting	2
8	4682915	Tube Assy - Tilt (2B)	1
9	4682916	Tube Assy - Tilt (2A)	1
10	~~6996681~~		
	1473887	Fitting	2
10	~~1495113~~		
	265731	O-Ring	1
11	~~1579809~~		
	222443	Fitting	2
11	16483	O-Ring	1
12	1543691	Clamp (Swivel)	3
13	1542442	Clamp (Swivel)	2
14	1502057	Clamp	2
15	1542436	Clamp (Swivel)	1
16	1606544	Clamp (Swivel)	1

©2026 HYSTER COMPANY

TILT HYDRAULICS (FIGURE 16-38)
WITH RTST

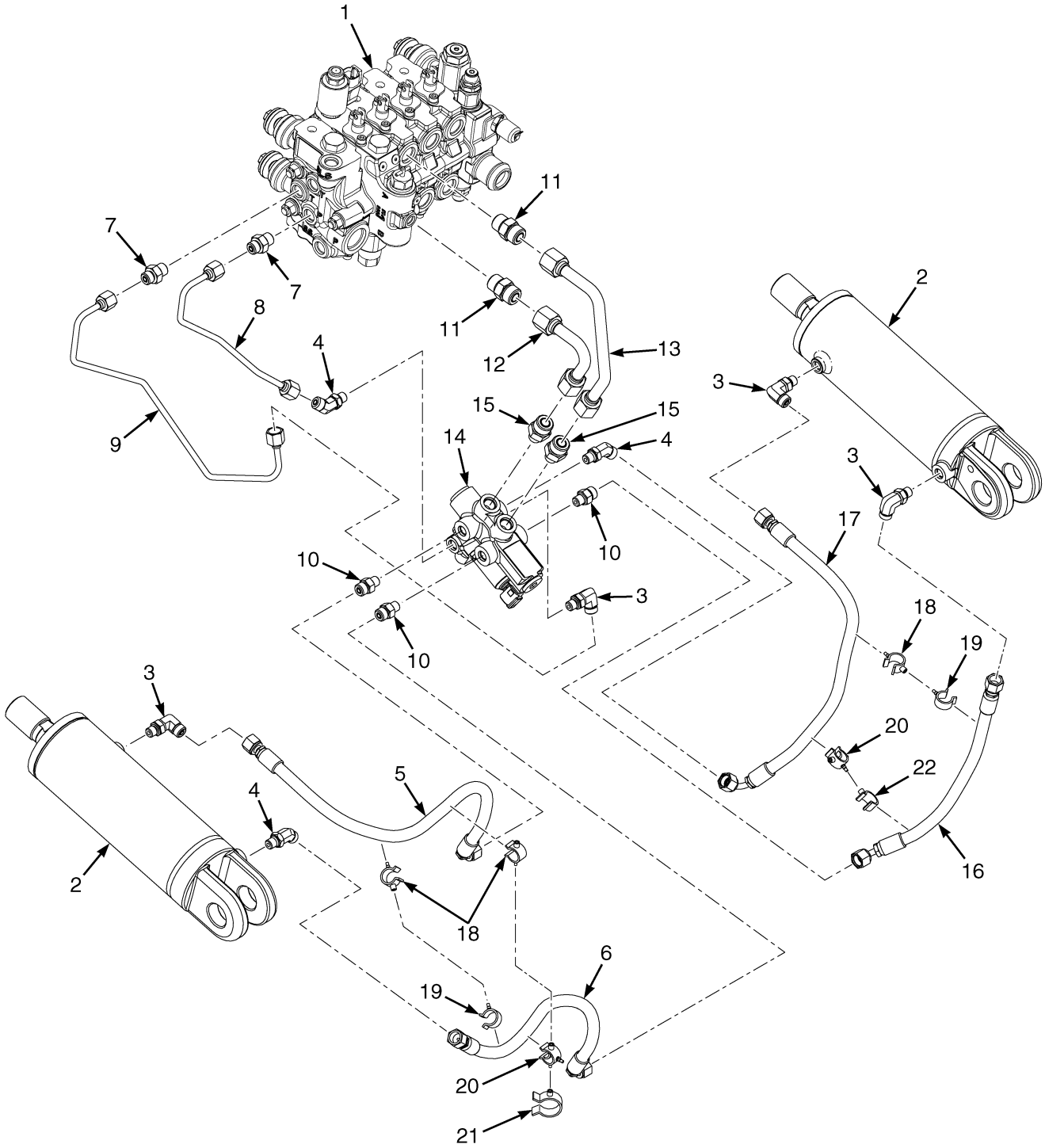

BP230030

©2026 HYSTER COMPANY

TILT HYDRAULICS
WITH RTST

ITEM	PART NO.	DESCRIPTION	QTY
1	. . . . .	Hydraulic Control Valve (☞Figure 16-14)	1
2	. . . . .	Tilt Cylinders (☞Figure 16-36)	2
3	1487058	Fitting	4
4	1516197	Fitting	3
5	4682922	Hose Assy (LH Rod)	1
6	4682921	Hose Assy (LH Base)	1
7	1486738	Fitting	2
8	4707618	Tube Assy - RTST (Tank)	1
9	4707619	Tube Assy - RTST (Pilot)	1
10	1486737	Fitting	3
11	~~6996681~~		
	1473887	Fitting	2
11	~~1495113~~		
	265731	O-Ring	1
12	4682915	Tube Assy - Tilt (2B)	1
13	4682916	Tube Assy - Tilt (2A)	1
14	4301634	Manifold - RTST	1
14	4346616	Manifold (Alternate Part)	1
14	1578714	Plug Assembly	2
14	4298010	Valve (Solenoid-Cartridge (90 DEG))	1
14	1578878	Capscrew	2
15	~~6996682~~		
	1486745	Fitting	2
16	4682919	Hose Assy (RH Base)	1
17	4682920	Hose Assy (RH Rod)	1
18	1543691	Clamp (Swivel)	3
19	1542442	Clamp (Swivel)	2
20	1502057	Clamp	2
21	1542436	Clamp (Swivel)	1
22	1606544	Clamp (Swivel)	1
	a 4710694	Wire Harness (Tilt Proportion Valve Jumper) (☞Figure 11-140)	1

FOOTNOTES:

a Not Illustrated

TILT HYDRAULICS (FIGURE 16-39)
WITHOUT RTST — HST

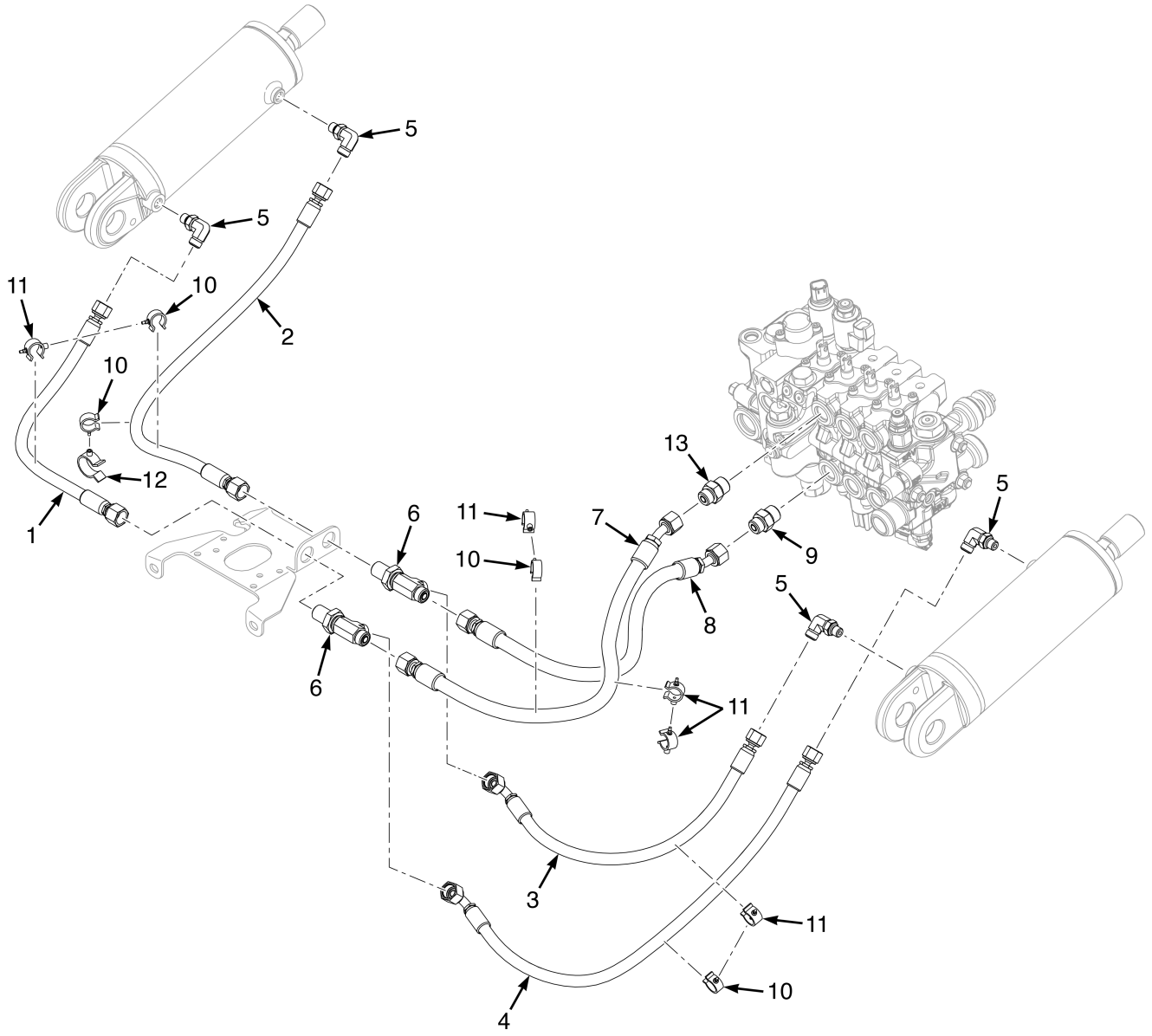

©2026 HYSTER COMPANY

TILT HYDRAULICS
WITHOUT RTST – HST

ITEM	PART NO.	DESCRIPTION	QTY
1	4694270	Hose Assy (LH - Base)	1
2	4694273	Hose Assy (LH - Rod)	1
3	4716297	Hose Assy (RH - Base)	1
4	4696759	Hose Assy (RH - Rod)	1
5	1487058	Fitting	4
6	1704608	T-Fitting	2
7	4716298	Hose Assy (2A)	1
7	4727005	Hose Assy - Tilt (2A) (Alternate Part)	1
8	4694267	Hose Assy (2B)	1
8	4727004	Hose Assy - Tilt (2B) (Alternate Part)	1
9	1486742	Fitting	1
10	1542442	Clamp (Swivel)	4
11	1543691	Clamp (Swivel)	5
12	1542436	Clamp (Swivel)	1
13	1486742	Fitting	1
13	1516201	Fitting (Alternate Part)	1

©2026 HYSTER COMPANY

STEER HYDRAULICS (FIGURE 16-40)

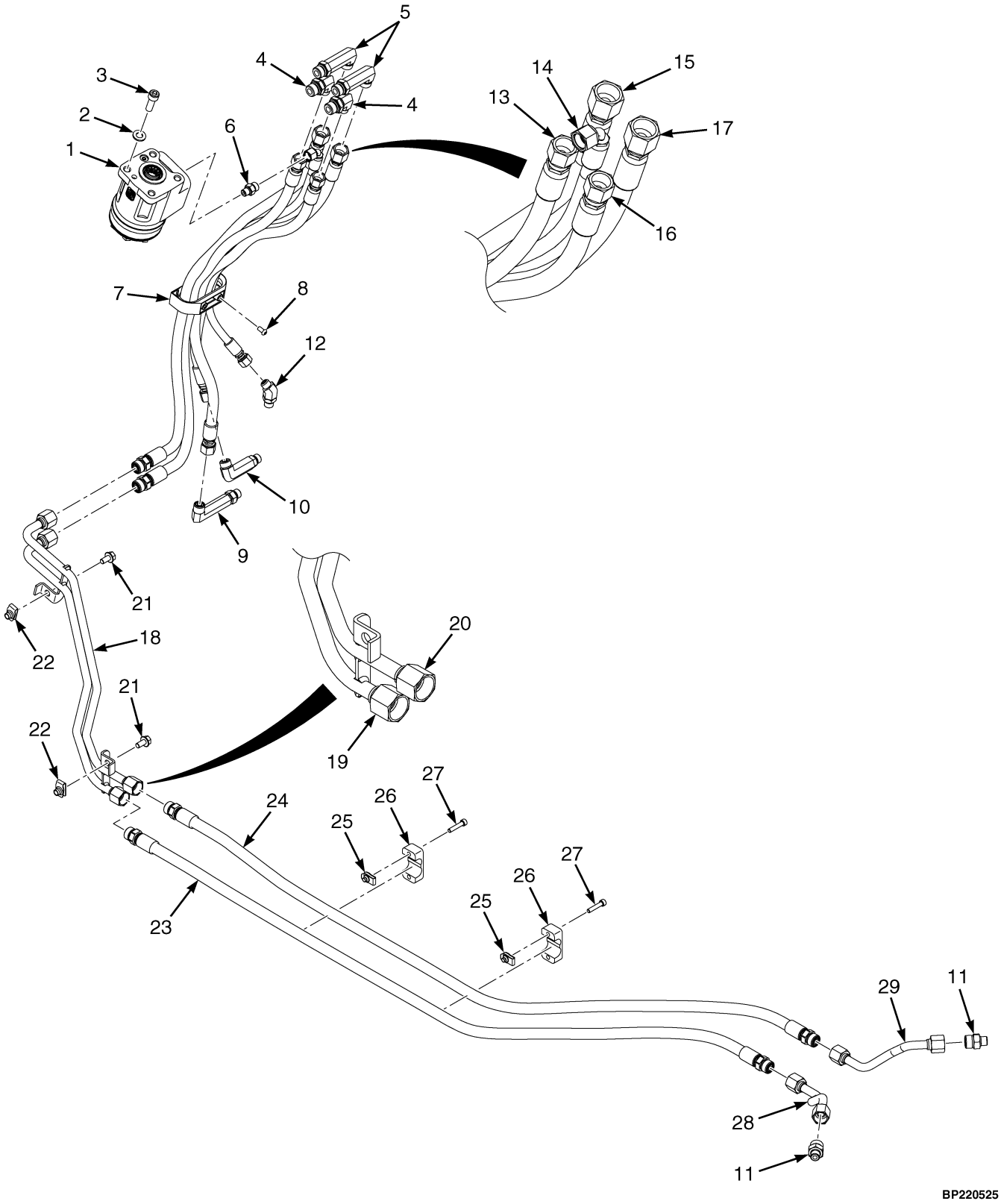

©2026 HYSTER COMPANY

STEER HYDRAULICS

ITEM	PART NO.	DESCRIPTION	QTY
1	4682026	Steering Control Unit - 80cc	1
1	4718745	Steering Control Unit (w/o sync steer) (Alternate Part)	1
1	4707016	Steering Control Unit (Synchronous Steering)	1
1	4718748	Steering Control Unit (w/ sync steer) (Alternate Part)	1
1	4016000	Kit-Seal	1
2	296420	Washer	4
3	296026	Capscrew	4
4	~~4147367~~		
	1487061	Fitting	2
5	1486559	Fitting	2
6	1486737	Fitting	1
7	4273199	Hose Guide - Steer Hose	1
8	4273298	Screw	2
9	4301533	Fitting	1
9	1486558	Fitting (w/ HFD)	1
9	4375768	Fitting (w/ HFD) (Alternate Part)	1
10	4305933	Fitting	1
10	1487063	Fitting (w/ HFD)	1
11	~~6996682~~		
	1486745	Fitting	2
12	1516198	Fitting	1
13	4698100	Hose Assy - Steer Right	1
13	4734557	Hose (Steer Right) (Alternate Part)	1
13	**a** 4716508	Hose Assy (Steer Right)	1
13	**a** 4734555	Hose (Steer Right) (Alternate Part)	1
14	4682846	Hose Assy - Load Sense	1
14	**a** 4716506	Hose Assy (Load Sense)	1
15	4698101	Hose Assy - Steer Left	1
15	4734558	Hose (Steer Left) (Alternate Part)	1
15	**a** 4716507	Hose Assy (Steer Left)	1
15	**a** 4734556	Hose (Steer Left) (Alternate Part)	1
16	4682844	Hose Assy - Steer Supply	1
16	**a** 4716504	Hose Assy (Steer Supply)	1
17	4682845	Hose Assy - Steer Return	1
17	**a** 4716505	Hose Assy (Steer Return)	1
18	**d** 4698347	Tube - Wldmt Assembly, Front Steer	1
18	**e** 4734523	Tube (Front Steer)	1
19	**d** 4698103	Tube Assy	1
20	**d** 4698102	Tube Assy	1
21	~~4109993~~		
	1527879	Capscrew	2
22	1480237	Nut (Foldover)	2
23	**c** 4697737	Hose Assy - Left Cylinder Port	1
23	**b** 4697741	Hose Assy - Left Cylinder Port	1
24	**c** 4697738	Hose Assy - Right Cylinder Port	1
24	**b** 4697742	Hose Assy - Right Cylinder Port	1
25	1566420	Nut (Foldover)	4
26	1360386	Clamp (Double Hose)	2
27	293797	Capscrew	4
28	**c** 4698105	Tube Assy - LH	1
28	**b** 4697739	Tube Assy - LH	1

©2026 HYSTER COMPANY

STEER HYDRAULICS

ITEM	PART NO.	DESCRIPTION	QTY
28	**c** 4698105	Tube Assy - LH (Alternate Part)	1
29	**c** 4698104	Tube Assy - RH	1
29	**b** 4697740	Tube Assy - RH	1
29	**c** 4698104	Tube Assy - RH (Alternate Part)	1

FOOTNOTES:

a Isolated Fig8 OHG
b Long Wheel Base
c Short Wheel Base
d → 10/2023
e 10/2023 →

©2026 HYSTER COMPANY

NOTES

STEER HYDRAULICS (FIGURE 16-41)

HST

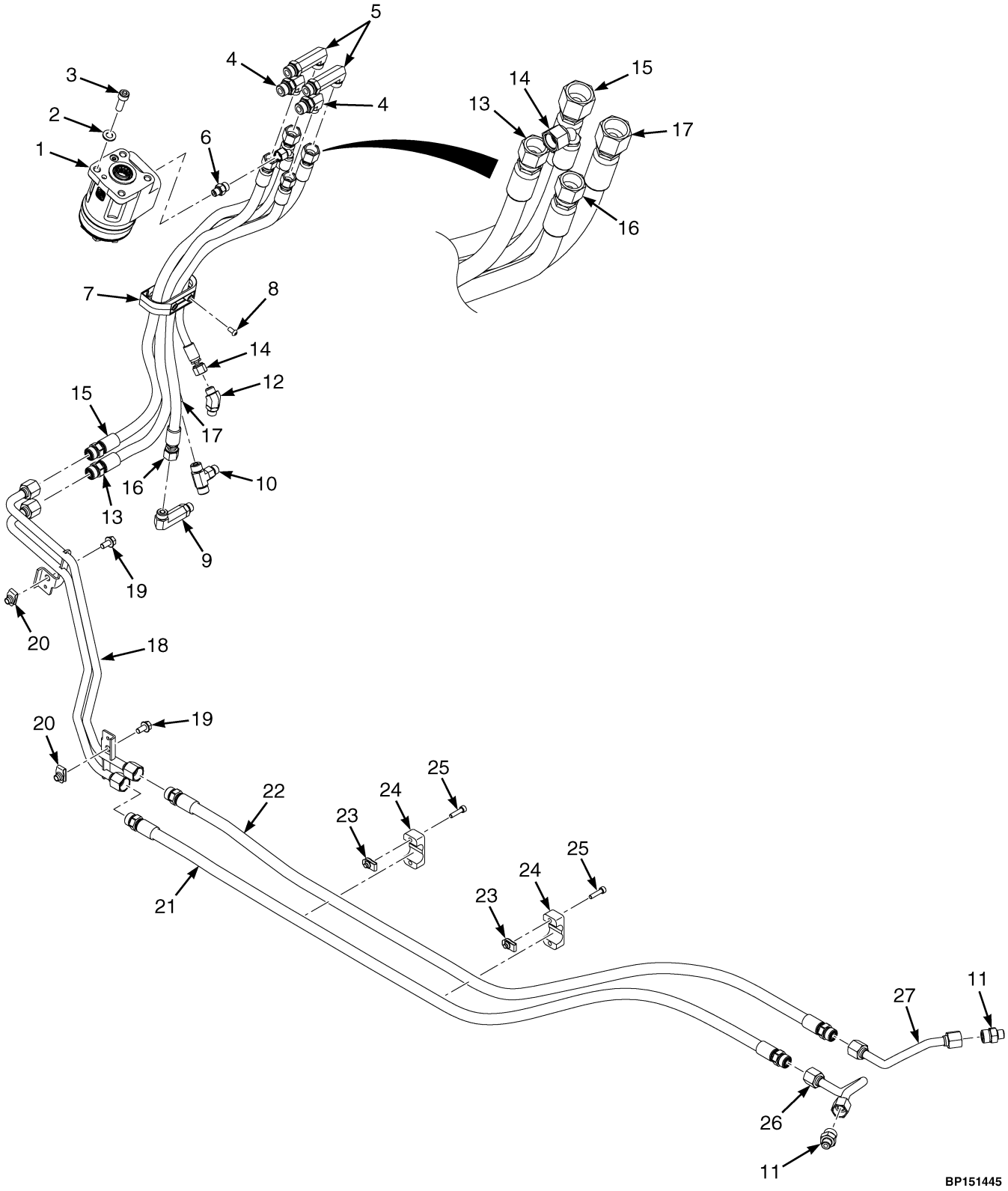

©2026 HYSTER COMPANY

STEER HYDRAULICS
HST

ITEM	PART NO.	DESCRIPTION	QTY
1	4682026	Steering Control Unit - 80cc	1
1	4016000	Kit-Seal	1
2	296420	Washer	4
3	296026	Capscrew	4
4	~~4147367~~		
	1487061	Fitting	2
5	1486559	Fitting	2
6	1486737	Fitting	1
7	4273199	Hose Guide - Steer Hose	1
8	4273298	Screw	2
9	1486558	Fitting	1
10	1532648	Fitting (HFD)	1
10	1487063	Fitting	1
11	~~6996682~~		
	1486745	Fitting	2
12	1516198	Fitting	1
13	4698100	Hose Assy - Steer Right	1
13	81005963	Hose Assy - Steer Right (Alternate Part)	1
13	4695167	Hose Assy - Steer Right (HFD)	1
14	4682846	Hose Assy - Load Sense	1
15	4695166	Hose Assy - Steer Left (HFD)	1
15	4698101	Hose Assy - Steer Left	1
15	81005962	Hose - Steer Left (Alternate Part)	1
16	4682844	Hose Assy - Steer Supply	1
17	4682845	Hose Assy - Steer Return	1
18	4700248	Tube - Front Steer HST	1
19	~~4109993~~		
	1527879	Capscrew	2
20	1480237	Nut (Foldover)	2
21	**a** 4697741	Hose Assy - Left Cylinder Port	1
21	**b** 4697737	Hose Assy - Left Cylinder Port	1
22	**a** 4697742	Hose Assy - Right Cylinder Port	1
22	**b** 4697738	Hose Assy - Right Cylinder Port	1
23	1566420	Nut (Foldover)	4
24	1360386	Clamp (Double Hose)	2
25	293796	Capscrew	4
26	**a** 4697739	Tube Assy - LH	1
26	**b** 4698105	Tube Assy - LH	1
27	**a** 4697740	Tube Assy - RH	1
27	**b** 4698104	Tube Assy - RH	1

FOOTNOTES:

a Long Wheel Base

b Short Wheel Base

©2026 HYSTER COMPANY

TRANSMISSION COOLING (FIGURE 16-42)
POWERSHIFT — WITH AIR CONDITIONING

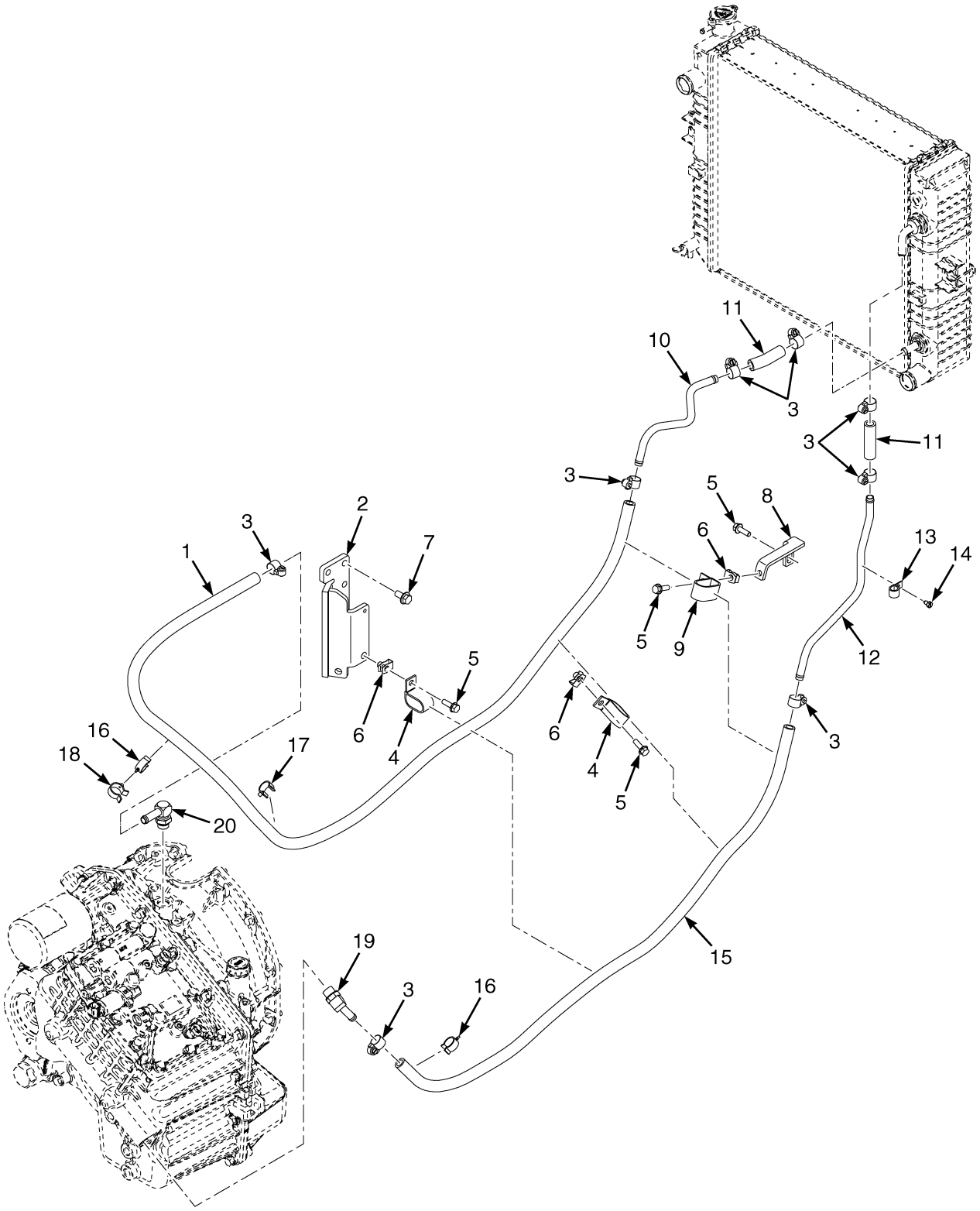

©2026 HYSTER COMPANY

ITEM	PART NO.	DESCRIPTION	QTY
1	4695420	Hose	1
1	4721117	Hose (Alternate Part)	1
2	4290984	Bracket Wldmt	1
3	166857	Clamp	8
4	4241995	Clamp	2
5	1510113	Capscrew	4
6	1398062	Nut (Fold Over)	3
7	1527883	Capscrew	3
8	. . . . .	Bracket	1
9	1326652	Clamp	1
10	4695423	Tube	1
11	4695422	Hose	2
12	4695424	Tube	1
13	132972	Clamp	1
14	16073	Screw	1
15	4695421	Hose	1
15	4721118	Hose (Alternate Part)	1
16	1502066	Clamp (Swivel)	2
17	1502053	Clamp (Swivel)	1
18	1502054	Clamp (Swivel)	1
18	1542436	Clamp (Swivel) (Alternate Part)	1
18	4078947	Clamp (Swivel) (Alternate Part)	1
19	222502	Fitting	1
20	~~4249144~~		
	4360803	Fitting	1

TRANSMISSION COOLING (FIGURE 16-43)

POWERSHIFT — WITH AIR CONDITIONING (ALTERNATE CONFIGURATION)

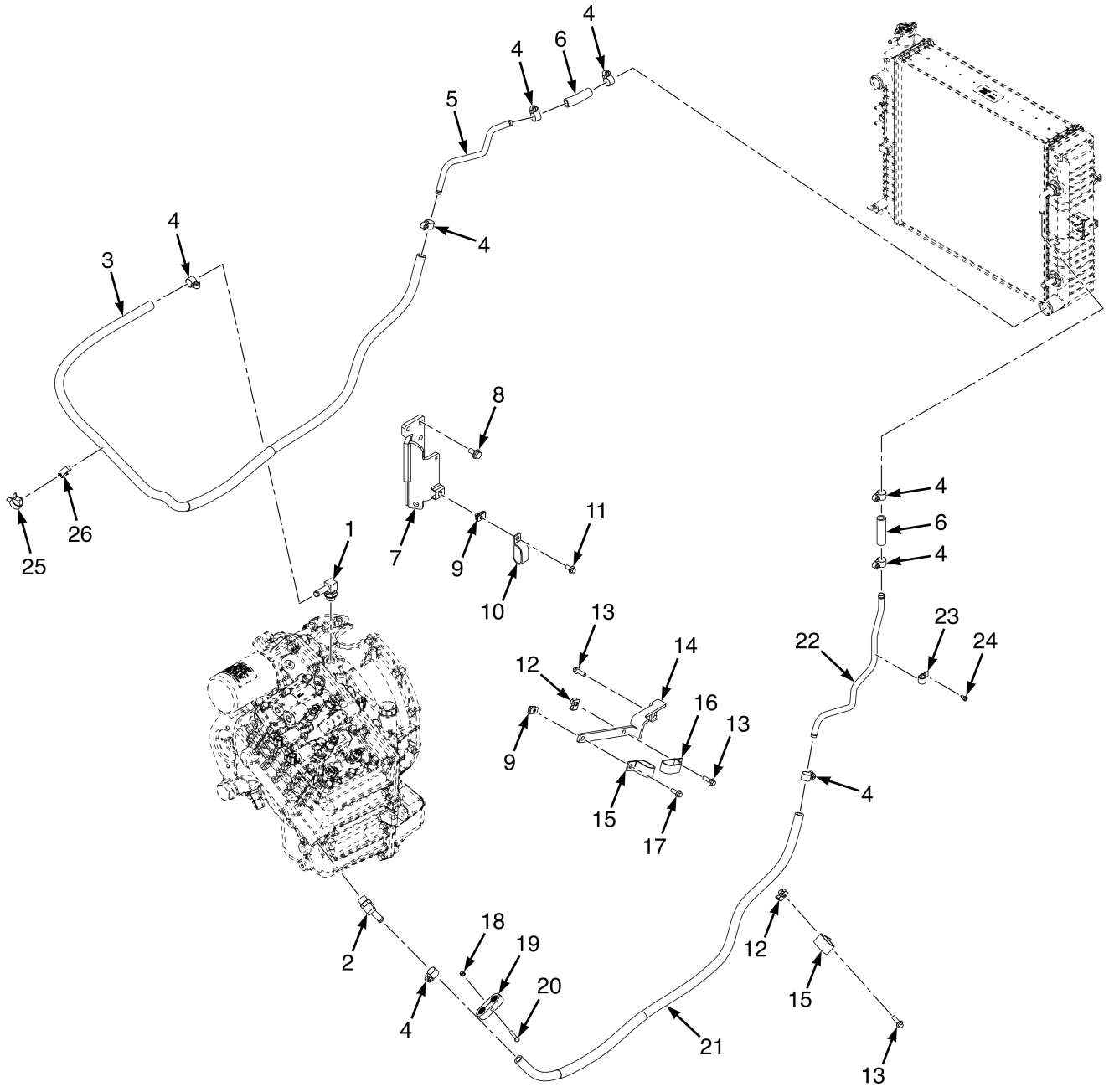

©2026 HYSTER COMPANY

TRANSMISSION COOLING

POWERSHIFT – WITH AIR CONDITIONING (ALTERNATE CONFIGURATION)

ITEM	PART NO.	DESCRIPTION	QTY
1	222510	Fitting	1
2	222502	Fitting	1
3	4735185	Hose	1
4	166857	Clamp	8
5	4735186	Tube	1
6	4695422	Hose	2
7	4290984	Bracket Wldmt	1
8	1527883	Capscrew	3
9	1480237	Nut (Foldover)	2
10	176454	Clamp	1
11	~~4109993~~		
	1527879	Capscrew	1
11	1527880	Capscrew (Alternate Part)	1
12	1398062	Nut (Fold Over)	2
13	1510113	Capscrew	3
14	4381109	Bracket	1
15	4241995	Clamp	2
16	251994	Clamp	1
17	1527880	Capscrew	1
18	313805	Nut	1
19	4389707	Clamp	1
20	287844	Capscrew	1
21	4735184	Hose	1
22	4735191	Tube	1
23	132972	Clamp	1
24	16073	Screw	1
25	1542436	Clamp (Swivel)	1
26	1502066	Clamp (Swivel)	1

©2026 HYSTER COMPANY

TRANSMISSION COOLING (FIGURE 16-44)

POWERSHIFT — WITHOUT AIR CONDITIONING (→ 6/2021)

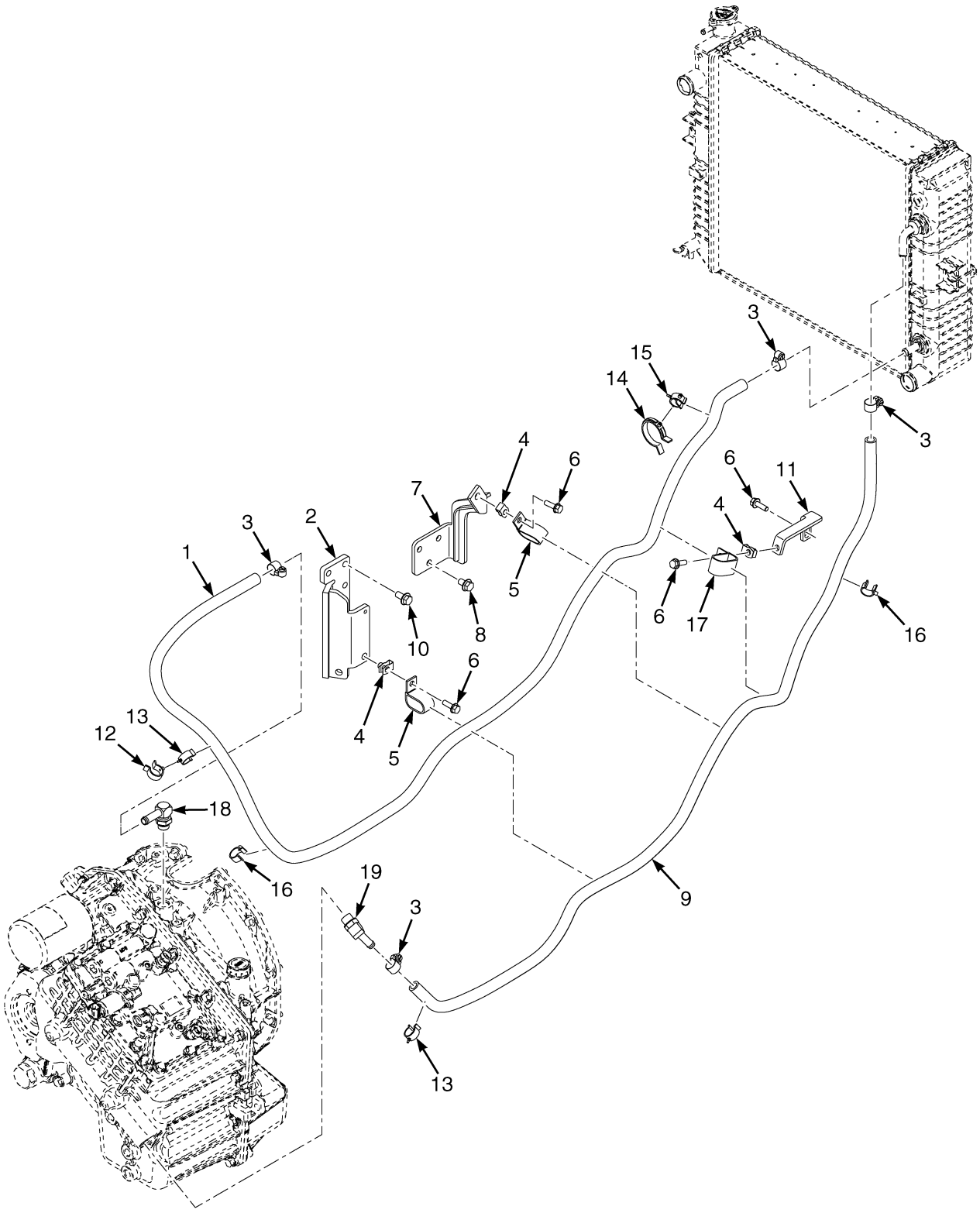

©2026 HYSTER COMPANY

TRANSMISSION COOLING

POWERSHIFT – WITHOUT AIR CONDITIONING (→ 6/2021)

KEY:
A: Yanmar IDI
B: w/o HFD, w/ CAC
C: w/ HFD, w/o CAC
D: w/ HFD, w/ CAC
E: w/o HFD, w/o CAC

ITEM	PART NO.	DESCRIPTION	QTY A	B	C	D	E
1	4700045	Hose	1	..	..	..	..
1	4721119	Hose (Alternate Part)	1	..	..	..	..
1	4699508	Hose	..	1	..	1	..
1	4711144	Hose (Alternate Part)	..	1	..	1	..
1	4721115	Hose (Alternate Part)	..	1	..	1	..
1	4726481	Hose (Alternate Part)	..	1	..	1	..
1	4731101	Hose (Alternate Part)	..	1	..	1	..
1	4697746	Hose	..	..	1	..	1
1	4721113	Hose (Alternate Part)	..	..	1	..	1
1	4725142	Hose (Alternate Part)	..	..	1	..	1
2	4290984	Bracket Wldmt	1	1	1	1	1
3	166857	Clamp	4	4	4	4	4
4	1398062	Nut (Fold Over)	3	3	3	3	3
5	4241995	Clamp	2	2	2	2	2
6	1527880	Capscrew	4	4	4	4	4
7	4289272	Mounting Weldment	..	1	..	..	1
8	1528778	Capscrew	..	3	..	..	3
9	4700046	Hose	1	..	..	..	..
9	4721120	Hose (Alternate Part)	1	..	..	..	..
9	4699509	Hose	..	1	..	1	..
9	4711145	Hose (Alternate Part)	..	1	..	1	..
9	4721116	Hose (Alternate Part)	..	1	..	1	..
9	4726482	Hose (Alternate Part)	..	1	..	1	..
9	4731102	Hose (Alternate Part)	..	1	..	1	..
9	4697747	Hose	..	..	1	..	1
9	4721114	Hose (Alternate Part)	..	..	1	..	1
9	4725143	Hose (Alternate Part)	..	..	1	..	1
10	1527883	Capscrew	3	3	3	3	3
11	. . . . .	Bracket	1	1	1	1	1
12	1502054	Clamp (Swivel)	1	1	1	1	1
12	1542436	Clamp (Swivel) (Alternate Part)	1	1	1	1	1
12	4078947	Clamp (Swivel) (Alternate Part)	1	1	1	1	1
13	1502066	Clamp (Swivel)	2	2	2	2	2
14	4166547	Clamp (Swivel)	1	1	1	1	1
15	1502057	Clamp	1	1	1	1	1
16	1502053	Clamp (Swivel)	2	2	2	2	2
17	1326652	Clamp	1	1	1	1	1
18	~~4249144~~						
	4360803	Fitting	1	1	1	1	1
19	222502	Fitting	1	1	1	1	1

©2026 HYSTER COMPANY

TRANSMISSION COOLING (FIGURE 16-45)

POWERSHIFT — WITHOUT AIR CONDITIONING (6/2021 →)

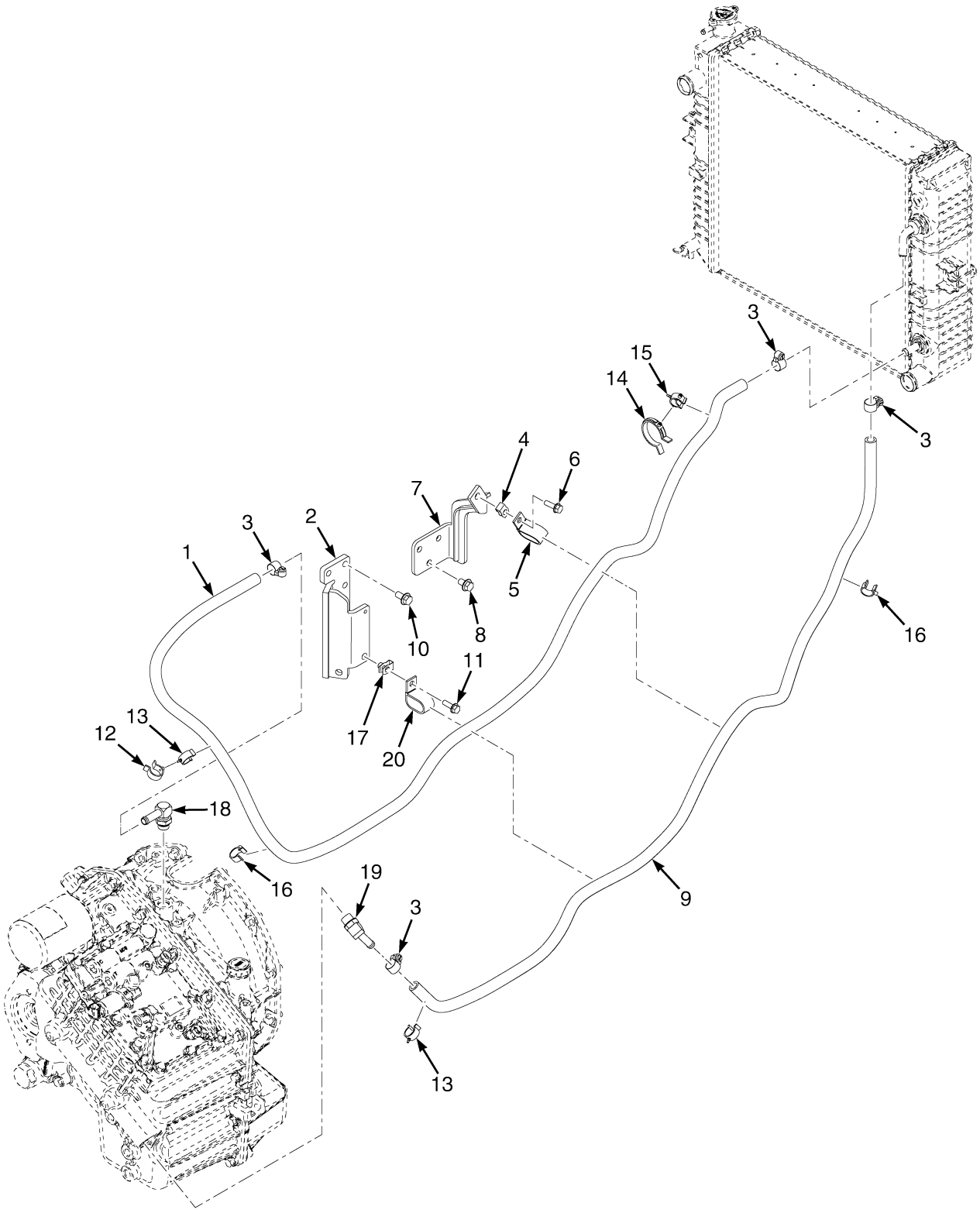

©2026 HYSTER COMPANY

TRANSMISSION COOLING

POWERSHIFT – WITHOUT AIR CONDITIONING (6/2021 →)

KEY:
A: Yanmar IDI
B: w/o HFD, w/ CAC
C: w/ HFD, w/o CAC
D: w/ HFD, w/ CAC
E: w/o HFD, w/o CAC

ITEM	PART NO.	DESCRIPTION	QTY A	B	C	D	E
1	4700045	Hose	1	..	..	..	..
1	4721119	Hose (Alternate Part)	1	..	..	..	..
1	**a** 4699508	Hose	..	1	..	1	..
1	**c** 4711144	Hose	..	1	..	1	..
1	**d** 4721115	Hose	..	1	..	1	..
1	**b** 4726481	Hose	..	1	..	1	..
1	**e** 4731101	Hose	..	1	..	1	..
1	4697746	Hose	..	..	1	..	1
1	4721113	Hose (Alternate Part)	..	..	1	..	1
1	4725142	Hose (Alternate Part)	..	..	1	..	1
2	4290984	Bracket Wldmt	1	1	1	1	1
3	166857	Clamp	4	4	4	4	4
4	1398062	Nut (Fold Over)	1	1	1	1	1
5	4241995	Clamp	1	1	1	1	1
6	1510113	Capscrew	1	1	1	1	1
7	4289272	Mounting Weldment	..	1	..	..	1
8	1528778	Capscrew	..	3	..	..	3
9	4700046	Hose	1	..	..	..	..
9	4721120	Hose (Alternate Part)	1	..	..	..	..
9	**a** 4699509	Hose	..	1	..	1	..
9	**c** 4711145	Hose	..	1	..	1	..
9	**d** 4721116	Hose	..	1	..	1	..
9	**b** 4726482	Hose	..	1	..	1	..
9	**e** 4731102	Hose	..	1	..	1	..
9	4697747	Hose	..	..	1	..	1
9	4721114	Hose (Alternate Part)	..	..	1	..	1
9	4725143	Hose (Alternate Part)	..	..	1	..	1
10	1527883	Capscrew	3	3	3	3	3
11	~~4109993~~						
	1527879	Capscrew	1	1	1	1	1
11	1527880	Capscrew (Alternate Part)	1	1	1	1	1
12	1502054	Clamp (Swivel)	1	1	1	1	1
12	1542436	Clamp (Swivel) (Alternate Part)	1	1	1	1	1
12	4078947	Clamp (Swivel) (Alternate Part)	1	1	1	1	1
13	1502066	Clamp (Swivel)	2	2	2	2	2
14	4166547	Clamp (Swivel)	1	1	1	1	1
15	1502057	Clamp	1	1	1	1	1
16	1502053	Clamp (Swivel)	2	2	2	2	2
17	1480237	Nut (Foldover)	1	1	1	1	1
18	~~4249144~~						
	4360803	Fitting	1	1	1	1	1
19	222502	Fitting	1	1	1	1	1

©2026 HYSTER COMPANY

TRANSMISSION COOLING

POWERSHIFT – WITHOUT AIR CONDITIONING (6/2021 →)

KEY:
A: Yanmar IDI
B: w/o HFD, w/ CAC
C: w/ HFD, w/o CAC
D: w/ HFD, w/ CAC
E: w/o HFD, w/o CAC

ITEM	PART NO.	DESCRIPTION	QTY A	QTY B	QTY C	QTY D	QTY E
20	176454	Clamp	1	1	1	1	1

FOOTNOTES:

a → 4/2021
b 11/2022 ↔ 4/2023
c 4/2021 ↔ 4/2022
d 4/2022 ↔ 11/2022
e 4/2023 →

©2026 HYSTER COMPANY

NOTES

TRANSMISSION COOLING (FIGURE 16-46)

HYDROSTATIC TRANSMISSION (→ 10/2022)

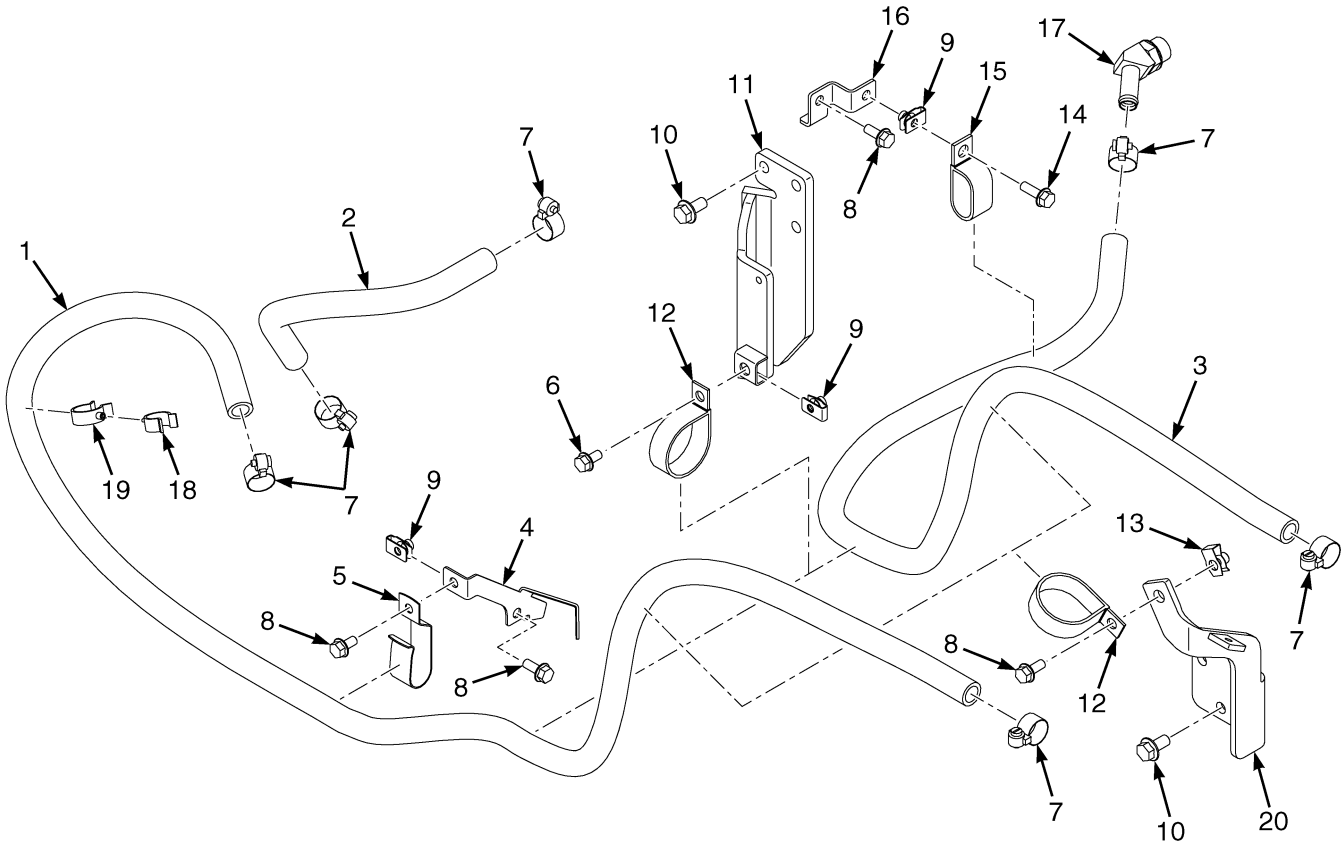

BP151309

©2026 HYSTER COMPANY

TRANSMISSION COOLING

HYDROSTATIC TRANSMISSION (→ 10/2022)

KEY:
A: LPG and Diesel w/o HFD
B: LPG and Diesel w/ HFD

ITEM	PART NO.	DESCRIPTION	QTY A	QTY B
1	4693435	Hose - HST Cooling	1	1
2	4694725	Hose - HST Cooling	1	1
3	4695879	Hose - HST Cooling	1	1
4	4281154	Bracket	1	1
5	1562648	Clip	1	1
6	~~4109993~~			
	1527879	Capscrew	1	1
7	130845	Clamp	6	6
8	1527880	Capscrew	4	4
9	1480237	Nut (Foldover)	3	3
10	1527883	Capscrew	6	3
11	4290984	Bracket Wldmt	1	1
12	4121575	Clamp	2	2
13	1398062	Nut (Fold Over)	1	1
14	1510113	Capscrew	1	1
15	177303	Clamp	1	1
16	4286945	Plate	1	1
17	222504	Fitting (Diesel)	1	1
17	16485	O-Ring	1	1
17	222512	Fitting (LPG)	1	1
17	16485	O-Ring	1	1
18	1502066	Clamp (Swivel)	1	1
19	1542436	Clamp (Swivel)	1	1
20	4289272	Mounting Weldment	1	..

©2026 HYSTER COMPANY

TRANSMISSION COOLING (FIGURE 16-47)

HYDROSTATIC TRANSMISSION (10/2022 →)

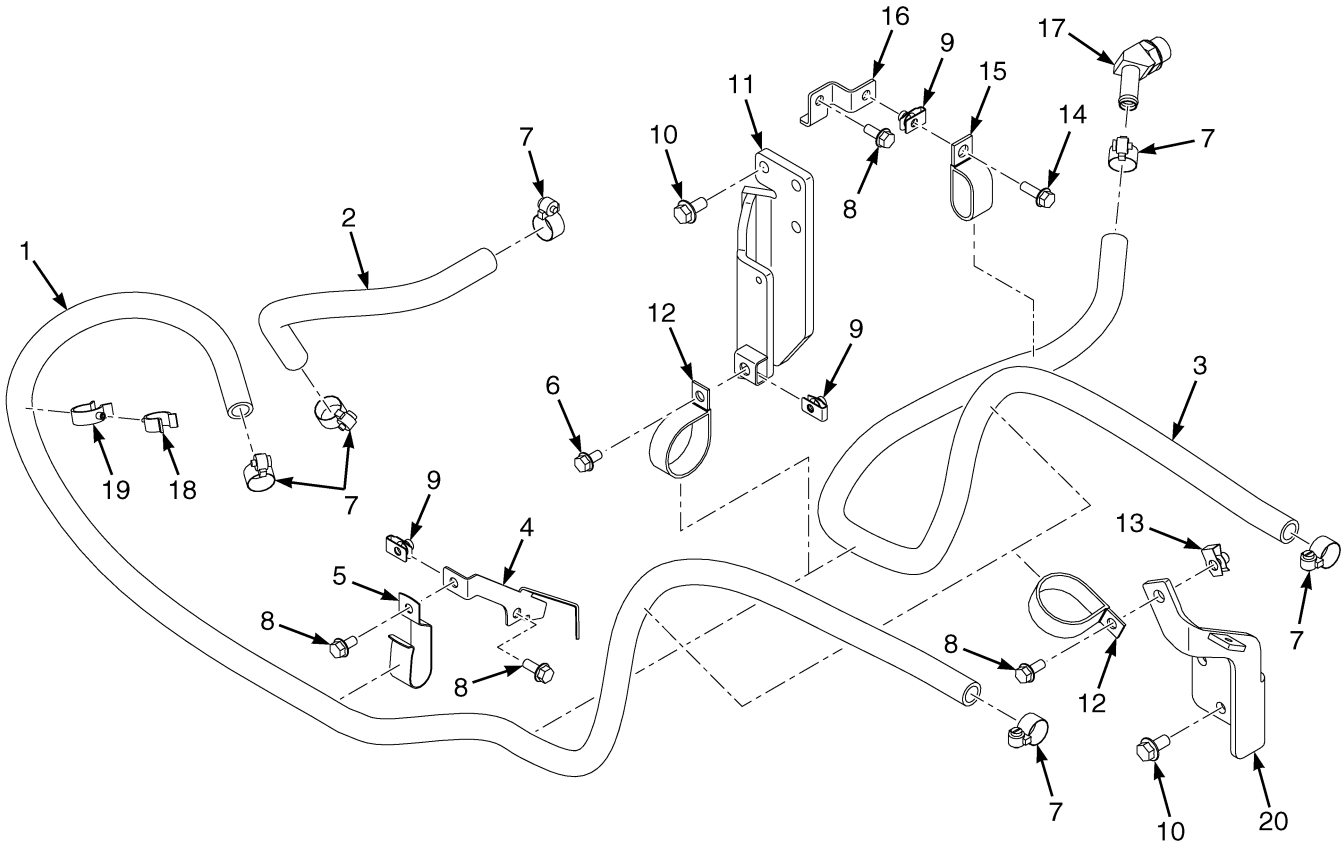

BP151309

©2026 HYSTER COMPANY

TRANSMISSION COOLING

HYDROSTATIC TRANSMISSION (10/2022 →)

KEY:
A: LPG w/o HFD
B: LPG w/ HFD
C: Diesel w/o HFD
D: Diesel w/ HFD

ITEM	PART NO.	DESCRIPTION	QTY A	QTY B	QTY C	QTY D
1	4720075	Hose - HST Cooling	1	1	1	1
2	4694725	Hose - HST Cooling	1	1	1	1
3	4695879	Hose - HST Cooling	..	1	..	..
3	4721999	Hose - HST Cooling	1	..	1	1
4	4281154	Bracket	1	1	1	1
5	1562648	Clip	1	1	1	1
6	~~4109993~~					
	1527879	Capscrew	1	1	1	1
7	130845	Clamp	6	6	6	6
8	1527880	Capscrew	4	4	4	4
9	1480237	Nut (Foldover)	3	3	3	3
10	1527883	Capscrew	6	3	6	3
11	4290984	Bracket Wldmt	1	1	1	1
12	4121575	Clamp	2	2	2	2
13	1398062	Nut (Fold Over)	1	1	1	1
14	1510113	Capscrew	1	1	1	1
15	177303	Clamp	1	1	1	1
16	4286945	Plate	1	1	1	1
17	222504	Fitting (Diesel)	..	..	1	1
17	16485	O-Ring	..	..	1	1
17	222512	Fitting (LPG)	1	1	..	..
17	16485	O-Ring	1	1	..	..
18	1543691	Clamp (Swivel)	1	1	1	1
19	1542436	Clamp (Swivel)	1	1	1	1
20	4289272	Mounting Weldment	1	..	1	..

©2026 HYSTER COMPANY

HYDRAULIC LEVERS (FIGURE 16-48)

WITHOUT RTST OR DSS — 3 FUNCTION WITHOUT DETENT

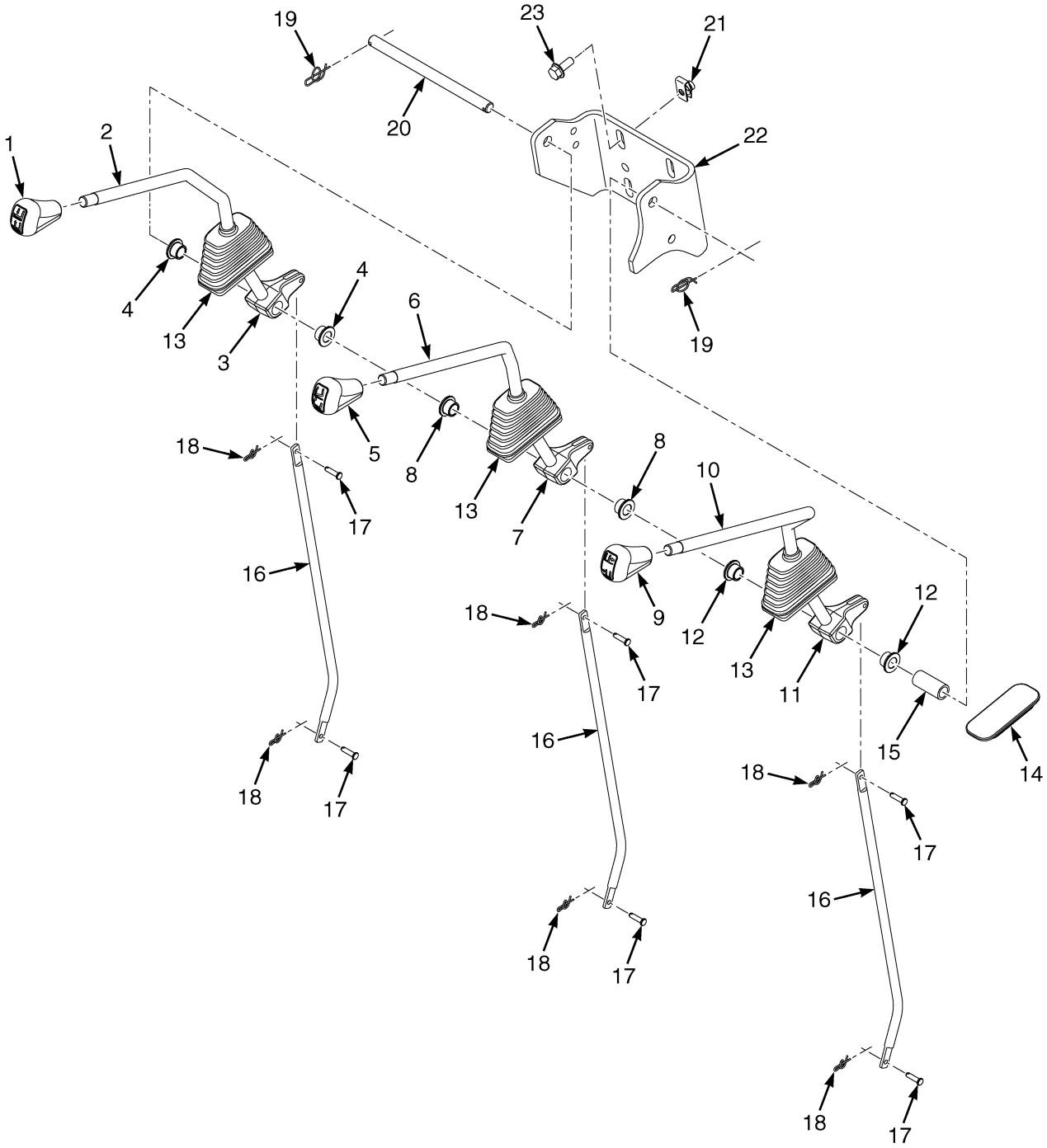

©2026 HYSTER COMPANY

HYDRAULIC LEVERS

WITHOUT RTST OR DSS – 3 FUNCTION WITHOUT DETENT

ITEM	PART NO.	DESCRIPTION	QTY
1	4695854	Knob (Lift)	1
2	4223252	Lever (Lift)	1
2	4223256	Control Lever	1
3	4223261	Yoke	1
4	4223263	Bushing	2
5	4695855	Knob (Tilt)	1
6	4223253	Lever (Tilt)	1
6	4223257	Lever	1
7	4223261	Yoke	1
8	4223263	Bushing	2
9	4695856	Knob (Side-Shift)	1
10	4223254	Lever (3rd Function)	1
10	4223258	Lever	1
11	4223261	Yoke	2
12	4223263	Bushing	2
13	2081863	Boot	3
14	4276354	Cap (Control Lever)	1
15	4223265	Spacer	1
16	4223260	Link - Control Levers	3
17	309109	Pin	6
18	1517361	Locking Ring Cotter Pin	6
19	1530011	Pin , Cotter	2
20	4223262	Pin - Control Levers	1
21	1480237	Nut (Foldover)	4
22	4223251	Bracket - Hyd Levers	1
23	4321958	Capscrew	4

©2026 HYSTER COMPANY

HYDRAULIC LEVERS (FIGURE 16-49)

WITHOUT RTST OR DSS — 4 FUNCTION WITHOUT DETENT

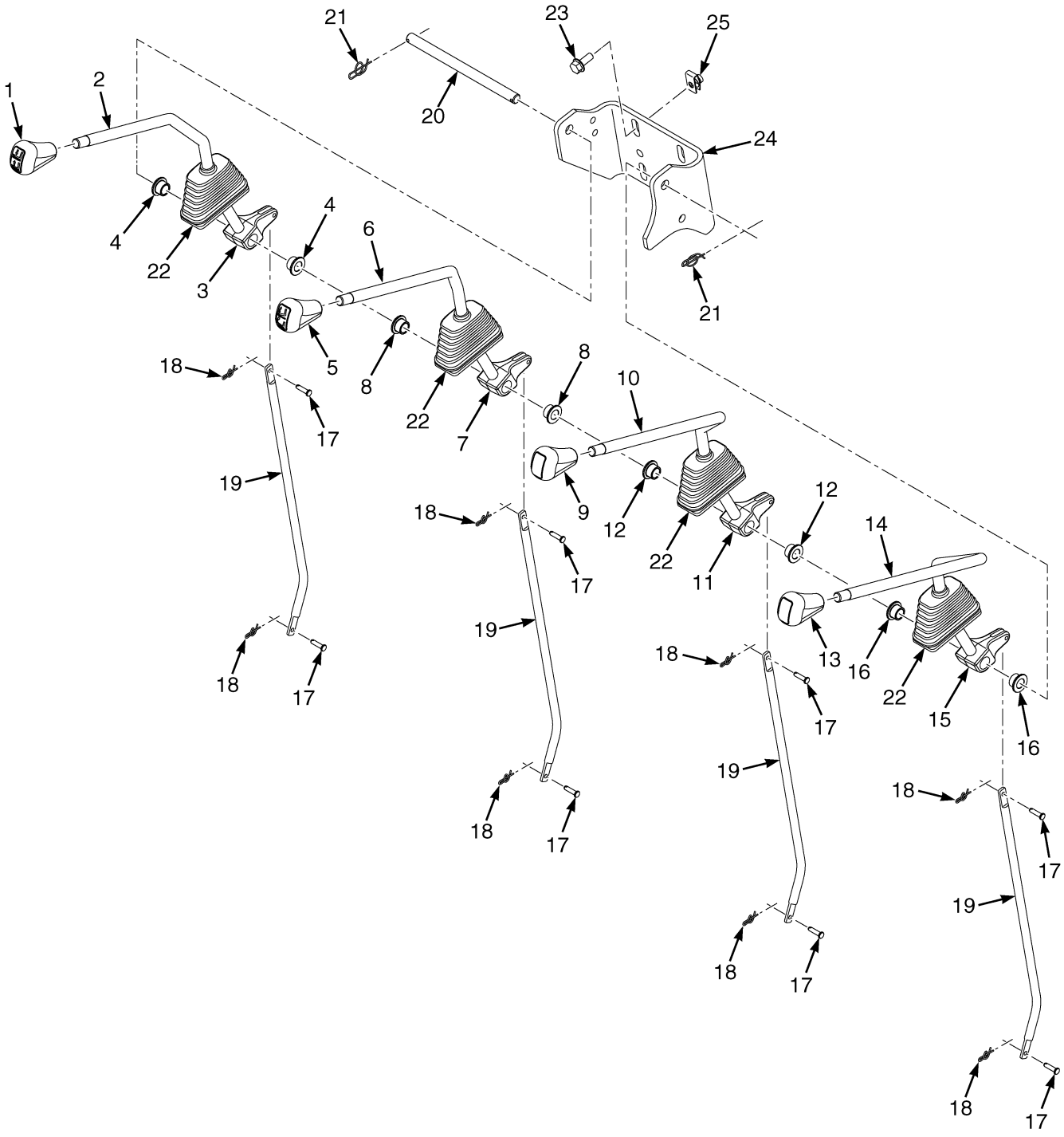

©2026 HYSTER COMPANY

HYDRAULIC LEVERS

WITHOUT RTST OR DSS – 4 FUNCTION WITHOUT DETENT

ITEM	PART NO.	DESCRIPTION	QTY
1	4695854	Knob (Lift)	1
2	4223252	Lever (Lift)	1
2	4223256	Control Lever	1
3	4223261	Yoke	1
4	4223263	Bushing	2
5	4695855	Knob (Tilt)	1
6	4223253	Lever (Tilt)	1
6	4223257	Lever	1
7	4223261	Yoke	1
8	4223263	Bushing	2
9	4696046	Knob (Auxiliary) (3rd Function)	1
10	4223254	Lever	1
10	4223258	Lever	1
11	4223261	Yoke	1
12	4223263	Bushing	2
13	4696046	Knob (Auxiliary) (Aux)	1
13	2102678	Label (Positioner) (Fork Positioner)	1
14	4223255	Lever (Fourth Function)	1
14	4223259	Lever	1
15	4223261	Yoke	1
16	4223263	Bushing	2
17	309109	Pin	8
18	1517361	Locking Ring Cotter Pin	8
19	4223260	Link - Control Levers	4
20	4223262	Pin - Control Levers	1
21	1530011	Pin , Cotter	2
22	2081863	Boot	4
23	4321958	Capscrew	4
24	4223251	Bracket - Hyd Levers	1
25	1480237	Nut (Foldover)	4

©2026 HYSTER COMPANY

HYDRAULIC LEVERS (FIGURE 16-50)
WITHOUT RTST OR DSS — 3 FUNCTION WITH DETENT

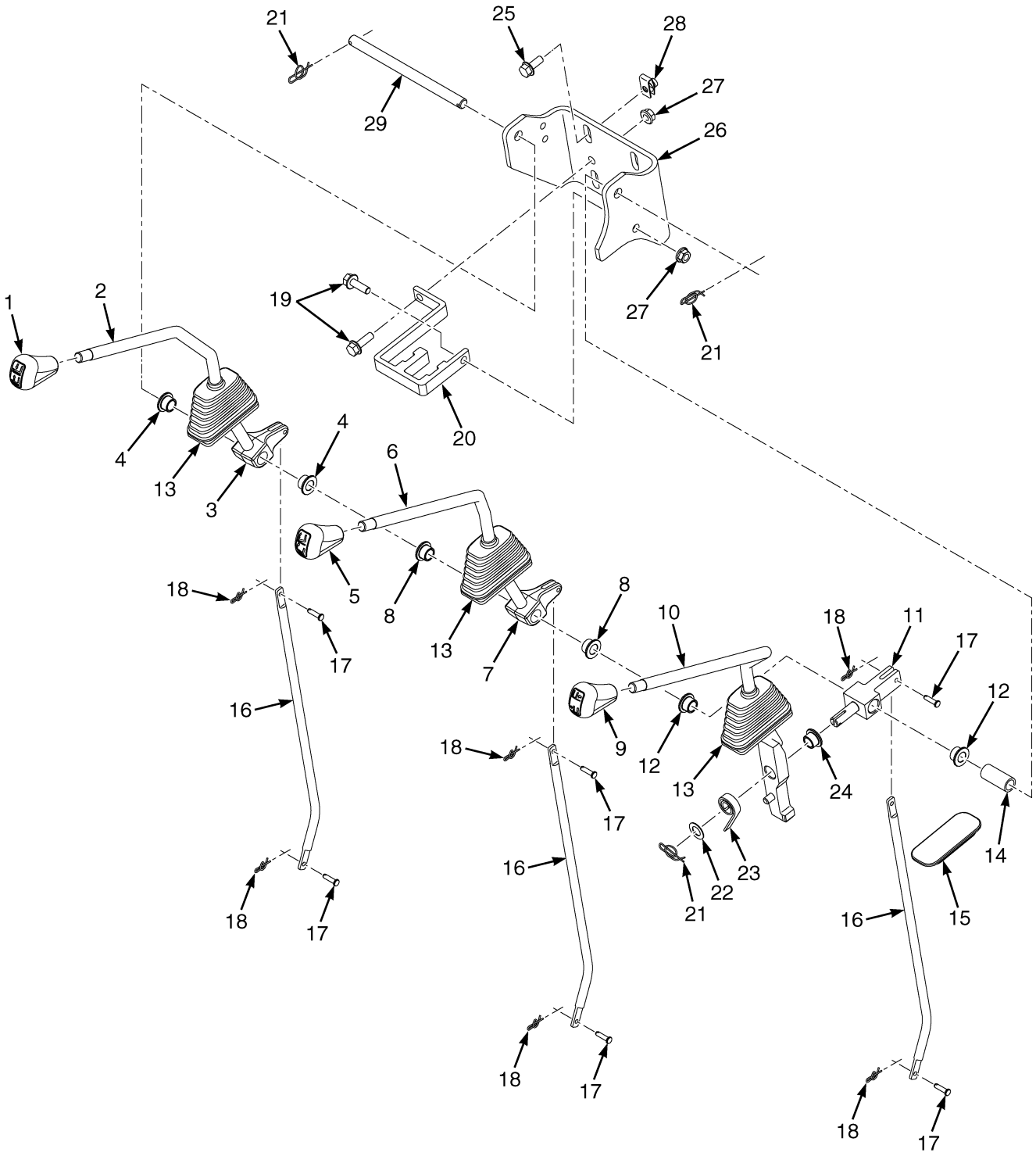

©2026 HYSTER COMPANY

HYDRAULIC LEVERS

WITHOUT RTST OR DSS – 3 FUNCTION WITH DETENT

ITEM	PART NO.	DESCRIPTION	QTY
1	4695854	Knob (Lift)	1
2	4223252	Lever (Lift)	1
2	4223256	Control Lever	1
3	4223261	Yoke	1
4	4223263	Bushing	2
5	4695855	Knob (Tilt)	1
6	4223253	Lever (Tilt)	1
6	4223257	Lever	1
7	4223261	Yoke	1
8	4223263	Bushing	2
9	4695856	Knob (Side-Shift)	1
10	4239324	Lever - 3rd function w/ detent	1
10	4239323	Lever	1
11	4270982	Pivot - M-Hyd Lever Detent	1
11	4223276	Pivot - M-Hyd Levers	1
12	4223263	Bushing	2
13	2081863	Boot	3
14	4223265	Spacer	1
15	4276354	Cap (Control Lever)	1
16	4223260	Link - Control Levers	3
17	309109	Pin	6
18	1517361	Locking Ring Cotter Pin	6
19	1510113	Capscrew	2
20	4223269	Block - Clamping Levers	1
21	1530011	Pin , Cotter	3
22	2305581	Shim (0.030 in.)	1
23	175861	Spring	1
24	4223263	Bushing	1
25	4321958	Capscrew	4
26	4223251	Bracket - Hyd Levers	1
27	~~1382472~~		
	1502543	Nut	2
28	1480237	Nut (Foldover)	4
29	4223262	Pin - Control Levers	1

HYDRAULIC LEVERS (FIGURE 16-51)
WITHOUT RTST OR DSS — 4 FUNCTION WITH DETENT

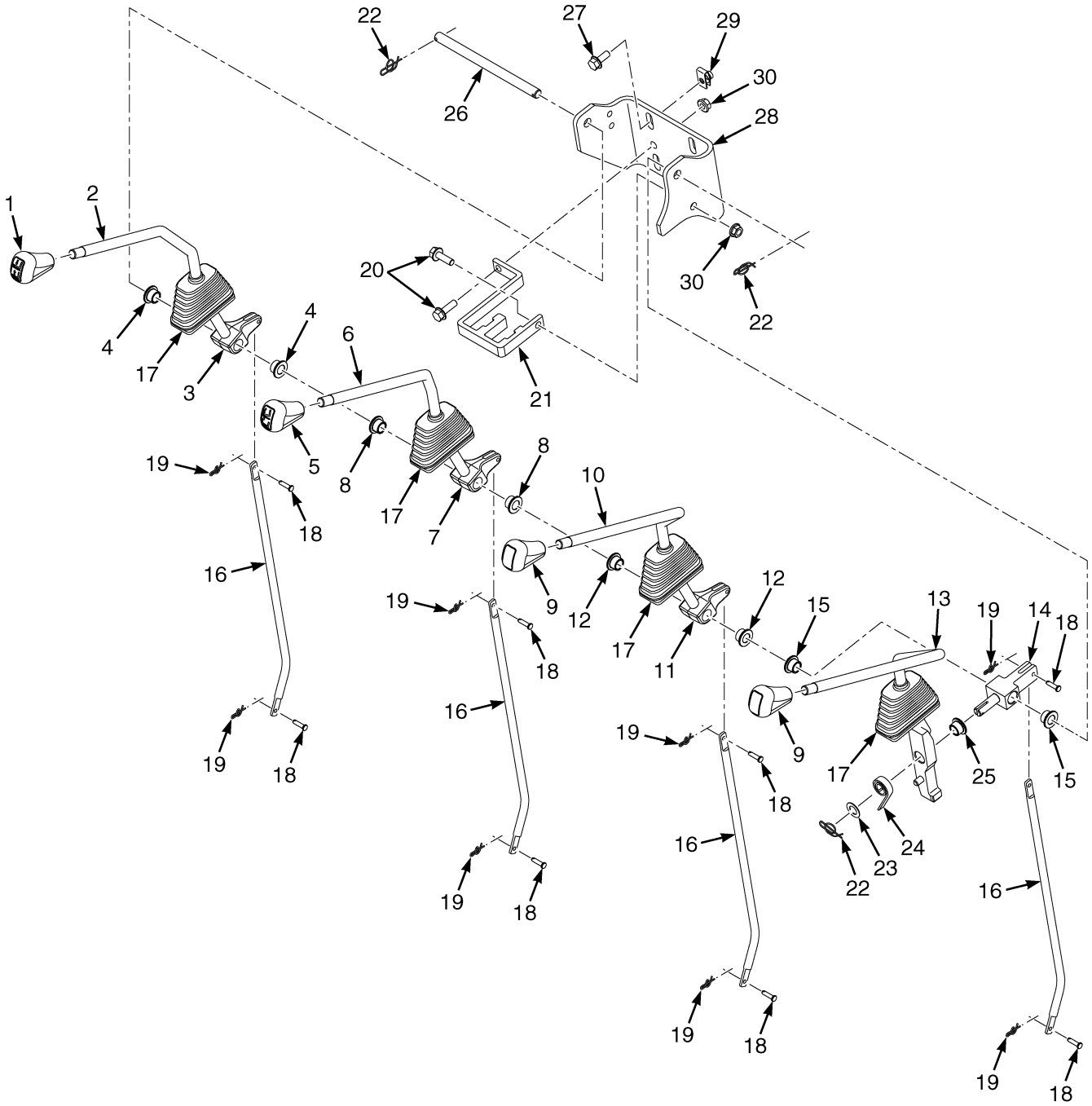

BP151179

©2026 HYSTER COMPANY

HYDRAULIC LEVERS

WITHOUT RTST OR DSS – 4 FUNCTION WITH DETENT

ITEM	PART NO.	DESCRIPTION	QTY
1	4695854	Knob (Lift)	1
2	4223252	Lever (Lift)	1
3	4223261	Yoke	1
4	4223263	Bushing	2
5	4695855	Knob (Tilt)	1
6	4223253	Lever (Tilt)	1
6	4223257	Lever	1
7	4223261	Yoke	1
8	4223263	Bushing	1
9	4696046	Knob (Auxiliary) (Aux 1 and Aux 2)	2
9	**a** 2102678	Label (Positioner) (Fork Positioner)	1
10	4223254	Lever (3rd Function)	1
10	4223258	Lever	1
11	4223261	Yoke	1
12	4223263	Bushing	2
13	4223266	Lever - 4th Function w/ detent	1
14	4270982	Pivot - M-Hyd Lever Detent	1
14	4223276	Pivot - M-Hyd Levers	1
15	4223263	Bushing	2
16	4223260	Link - Control Levers	4
17	2081863	Boot	4
18	309109	Pin	8
19	1517361	Locking Ring Cotter Pin	8
20	1510113	Capscrew	2
21	4223269	Block - Clamping Levers	1
22	1530011	Pin , Cotter	3
23	2305581	Shim (0.030 in.)	1
24	175861	Spring	1
25	4223263	Bushing	1
26	4223262	Pin - Control Levers	1
27	4321958	Capscrew	4
28	4223251	Bracket - Hyd Levers	1
29	1480237	Nut (Foldover)	4
30	~~1382472~~		
	1502543	Nut	2

FOOTNOTES:

a 4th Function

HYDRAULIC LEVERS (FIGURE 16-52)

WITH RTST WITHOUT DSS, WITH RTST AND DSS, WITH DSS WITHOUT RTST — 2 FUNCTION

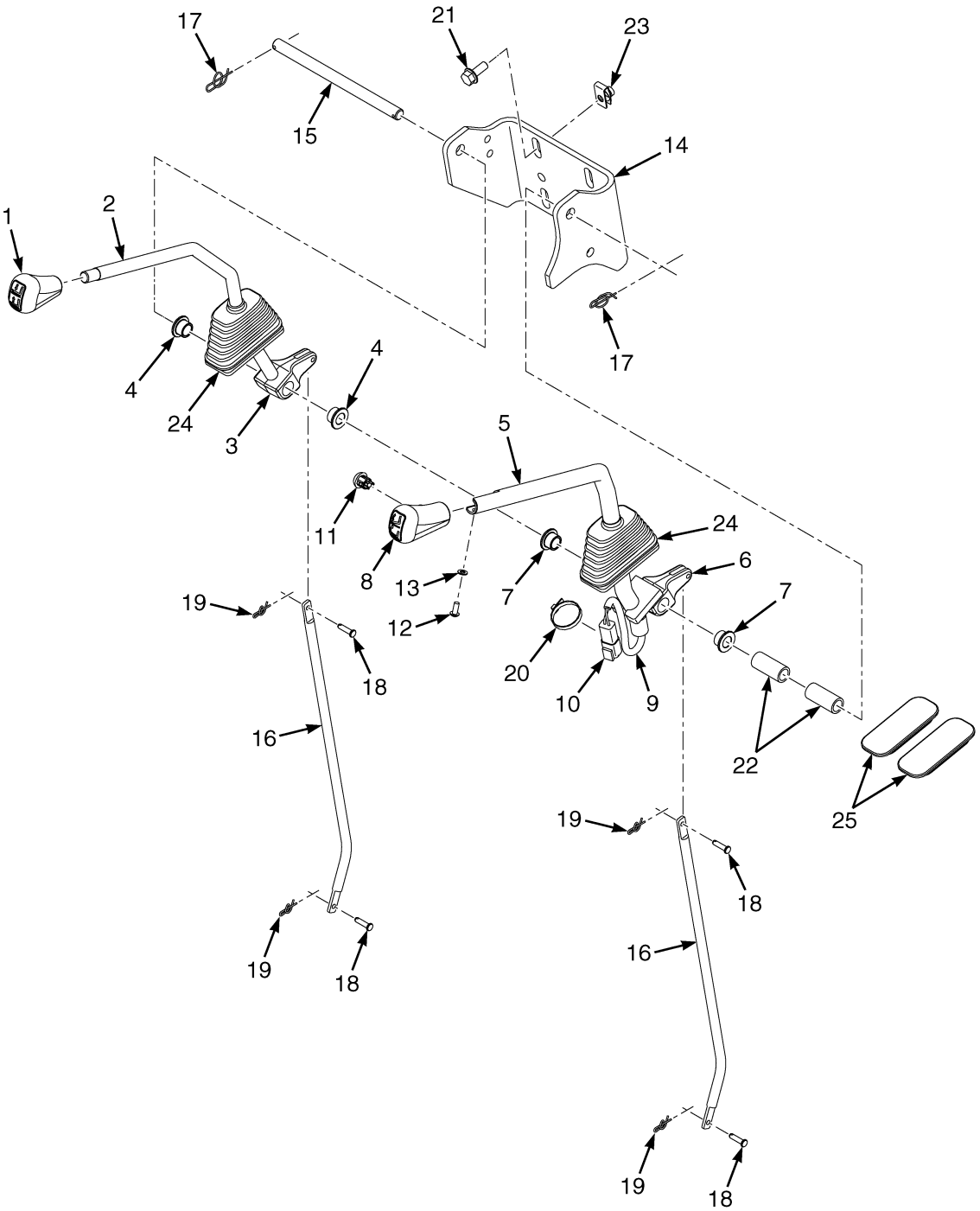

©2026 HYSTER COMPANY

ITEM	PART NO.	DESCRIPTION	QTY
1	4695854	Knob (Lift)	1
2	4223252	Lever (Lift)	1
2	4223256	Control Lever	1
3	4223261	Yoke	1
4	4223263	Bushing	2
5	4275071	Lever (Tilt)	1
5	4276856	Lever	1
5	. . . . .	Lever	1
6	4223261	Yoke	1
7	4223263	Bushing	2
8	4695201	Knob	1
9	4695163	Wire Harness (Manual Interlock)	1
9	~~1570624~~		
	1463140	Terminal (Pin)	2
10	1561559	Connector (2 Pin)	1
10	1561755	Connector (Secondary Lock)	1
11	4694783	Push Button Switch	1
12	296152	Capscrew	1
13	320155	Washer	1
14	4223251	Bracket - Hyd Levers	1
15	4223262	Pin - Control Levers	1
16	4223260	Link - Control Levers	2
17	1530011	Pin , Cotter	2
18	309109	Pin	4
19	1517361	Locking Ring Cotter Pin	4
20	137852	Strap Clamp	1
21	4321958	Capscrew	4
22	4223265	Spacer	2
23	1480237	Nut (Foldover)	4
24	2081863	Boot	2
25	4276354	Cap (Control Lever)	2

HYDRAULIC LEVERS (FIGURE 16-53)

WITH RTST WITHOUT DSS, WITH RTST AND DSS, WITH DSS WITHOUT RTST — 3 FUNCTION

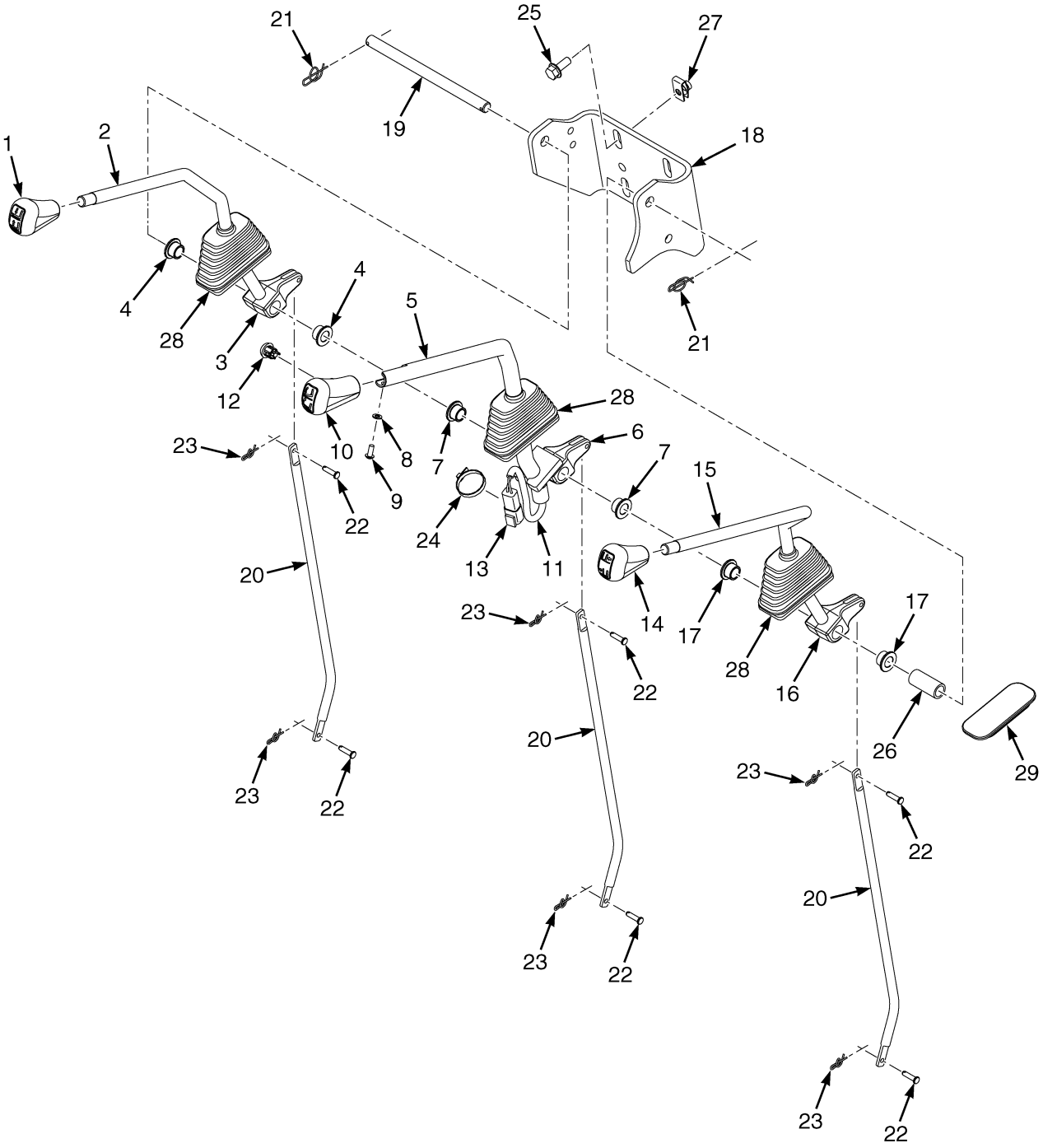

BP151281

©2026 HYSTER COMPANY

ITEM	PART NO.	DESCRIPTION	QTY
1	4695854	Knob (Lift)	1
2	4223252	Lever (Lift)	1
2	4223256	Control Lever	1
3	4223261	Yoke	1
4	4223263	Bushing	2
5	4275071	Lever (Tilt)	1
5	4276856	Lever	1
5	. . . . .	Lever	1
6	4223261	Yoke	1
7	4223263	Bushing	2
8	320155	Washer	1
9	296152	Capscrew	1
10	4695201	Knob	1
11	4695163	Wire Harness (Manual Interlock)	1
11	~~1570624~~		
	1463140	Terminal (Pin)	2
12	4694783	Push Button Switch	1
13	1561755	Connector (Secondary Lock)	1
13	1561559	Connector (2 Pin)	1
14	4695856	Knob (Side-Shift)	1
14	4696046	Knob (Auxiliary) (Option)	1
15	4223254	Lever (3rd Function)	1
15	4223258	Lever	1
16	4223261	Yoke	1
17	4223263	Bushing	2
18	4223251	Bracket - Hyd Levers	1
19	4223262	Pin - Control Levers	1
20	4223260	Link - Control Levers	3
21	1530011	Pin , Cotter	2
22	309109	Pin	6
23	1517361	Locking Ring Cotter Pin	6
24	137852	Strap Clamp	1
25	4321958	Capscrew	4
26	4223265	Spacer	1
27	1480237	Nut (Foldover)	4
28	2081863	Boot	3
29	4276354	Cap (Control Lever)	1

HYDRAULIC LEVERS (FIGURE 16-54)

WITH RTST WITHOUT DSS, WITH RTST AND DSS, WITH DSS WITHOUT RTST — 3 FUNCTION WITH DETENT

©2026 HYSTER COMPANY

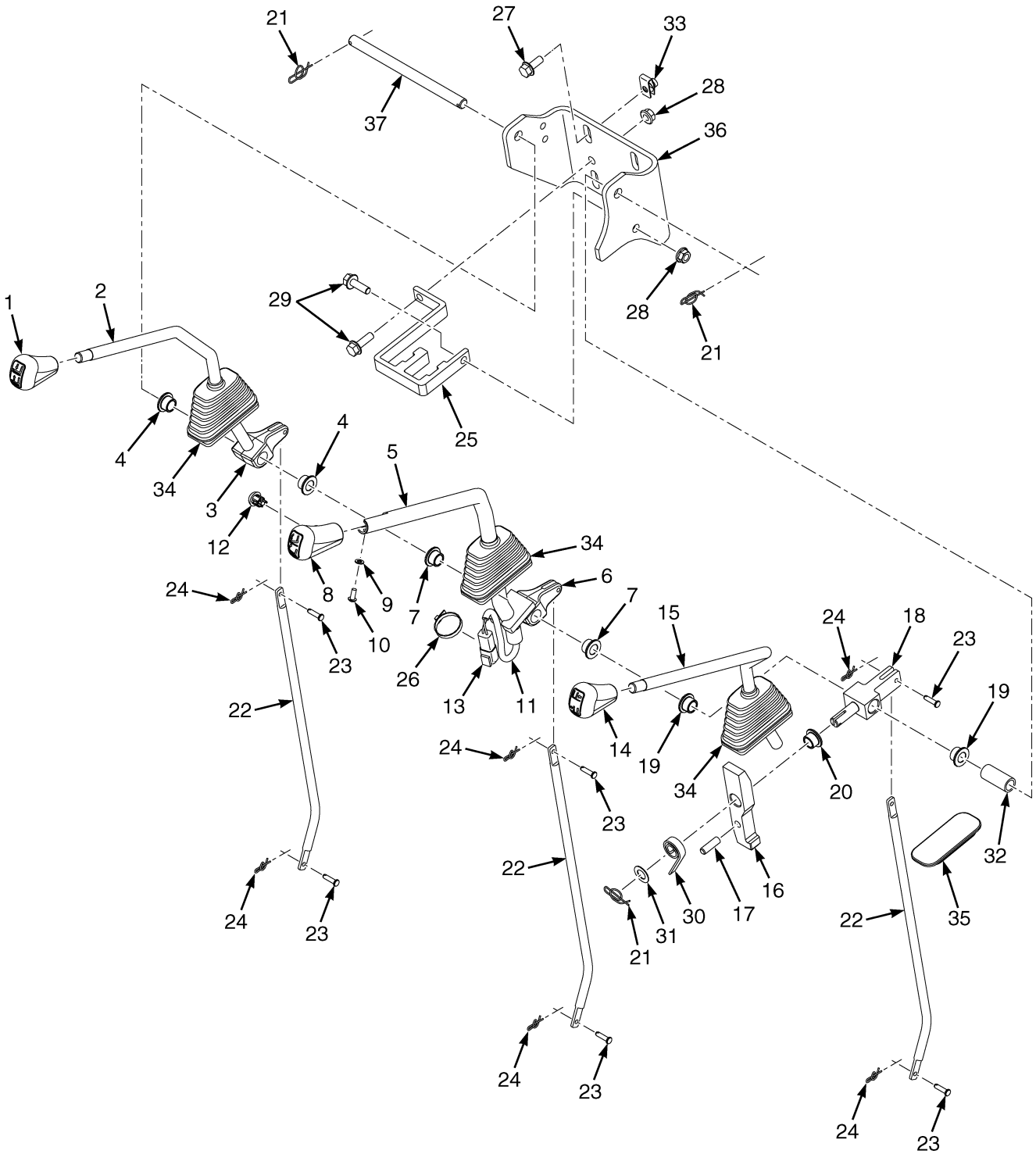

BP151282

ITEM	PART NO.	DESCRIPTION	QTY
1	4695854	Knob (Lift)	1

ITEM	PART NO.	DESCRIPTION	QTY
2	4223252	Lever (Lift)	1
2	4223256	Control Lever	1
3	4223261	Yoke	1
4	4223263	Bushing	2
5	4275071	Lever (Tilt)	1
5	4276856	Lever	1
5	. . . . .	Lever	1
6	4223261	Yoke	1
7	4223263	Bushing	2
8	4695201	Knob	1
9	320155	Washer	1
10	296152	Capscrew	1
11	4695163	Wire Harness (Manual Interlock)	1
11	~~1570624~~		
	1463140	Terminal (Pin)	2
12	4694783	Push Button Switch	1
13	1561755	Connector (Secondary Lock)	1
13	1561559	Connector (2 Pin)	1
14	4695856	Knob (Side-Shift)	1
14	4696046	Knob (Auxiliary) (Option)	1
15	4239324	Lever - 3rd function w/ detent	1
15	4239323	Lever	1
16	. . . . .	Plate	1
17	. . . . .	Pin	1
18	4270982	Pivot - M-Hyd Lever Detent	1
18	4223276	Pivot - M-Hyd Levers	1
19	4223263	Bushing	2
20	4223263	Bushing	1
21	1530011	Pin , Cotter	3
22	4223260	Link - Control Levers	3
23	309109	Pin	6
24	1517361	Locking Ring Cotter Pin	6
25	4223269	Block - Clamping Levers	1
26	137852	Strap Clamp	1
27	4321958	Capscrew	4
28	~~1382472~~		
	1502543	Nut	2
29	1510113	Capscrew	2
30	175861	Spring	1
31	2305581	Shim (0.030 in.)	1
32	4223265	Spacer	1
33	1480237	Nut (Foldover)	4
34	2081863	Boot	3
35	4276354	Cap (Control Lever)	1
36	4223251	Bracket - Hyd Levers	1
37	4223262	Pin - Control Levers	1

See Service Manual for service procedures.
©2026 HYSTER COMPANY

HYDRAULIC LEVERS (FIGURE 16-55)

WITH RTST WITHOUT DSS, WITH RTST AND DSS, WITH DSS WITHOUT RTST — 4 FUNCTION

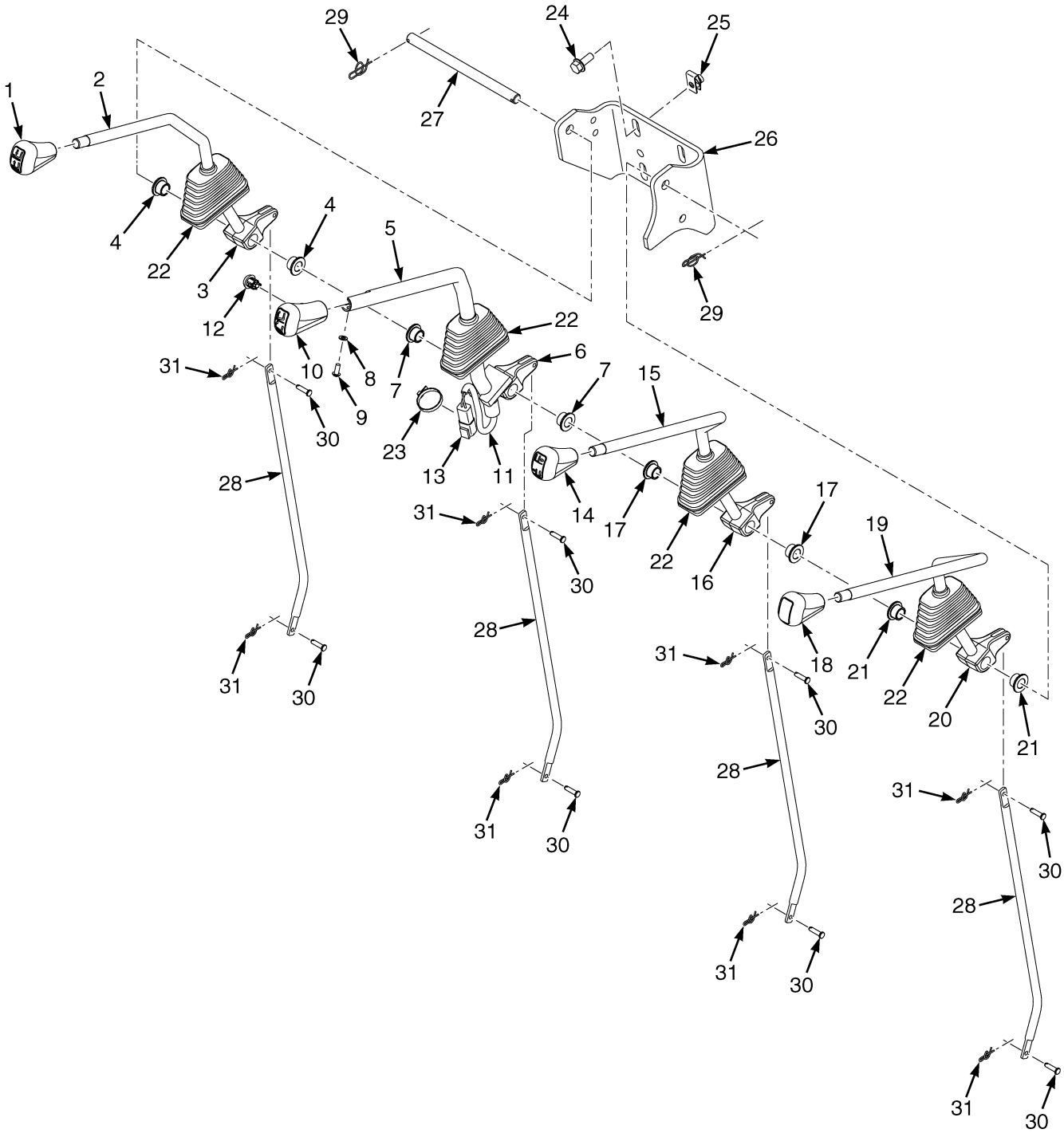

ITEM	PART NO.	DESCRIPTION	QTY
1	4695854	Knob (Lift)	1
2	4223252	Lever (Lift)	1
2	4223256	Control Lever	1
3	4223261	Yoke	1
4	4223263	Bushing	2
5	4275071	Lever (Tilt)	1
5	4276856	Lever	1
5	. . . . .	Lever	1
6	4223261	Yoke	1
7	4223263	Bushing	2
8	320155	Washer	1
9	296152	Capscrew	1
10	4695201	Knob	1
11	4695163	Wire Harness (Manual Interlock)	1
11	~~1570624~~		
	1463140	Terminal (Pin)	2
12	4694783	Push Button Switch	1
13	1561559	Connector (2 Pin)	1
13	1561755	Connector (Secondary Lock)	1
14	4695856	Knob (Side-Shift)	1
14	4696046	Knob (Auxiliary) (Option)	1
15	4223254	Lever (3rd Function)	1
15	4223258	Lever	1
16	4223261	Yoke	1
17	4223263	Bushing	2
18	4696046	Knob (Auxiliary)	1
19	4223255	Lever (Fourth Function)	1
19	4223259	Lever	1
20	4223261	Yoke	1
21	4223263	Bushing	2
22	2081863	Boot	4
23	137852	Strap Clamp	1
24	4321958	Capscrew	4
25	1480237	Nut (Foldover)	4
26	4223251	Bracket - Hyd Levers	1
27	4223262	Pin - Control Levers	1
28	4223260	Link - Control Levers	4
29	1530011	Pin , Cotter	2
30	309109	Pin	8
31	1517361	Locking Ring Cotter Pin	8

See Service Manual for service procedures.
©2026 HYSTER COMPANY

HYDRAULIC LEVERS (FIGURE 16-56)

WITH RTST WITHOUT DSS, WITH RTST AND DSS, WITH DSS WITHOUT RTST — 4 FUNCTION WITH DETENT

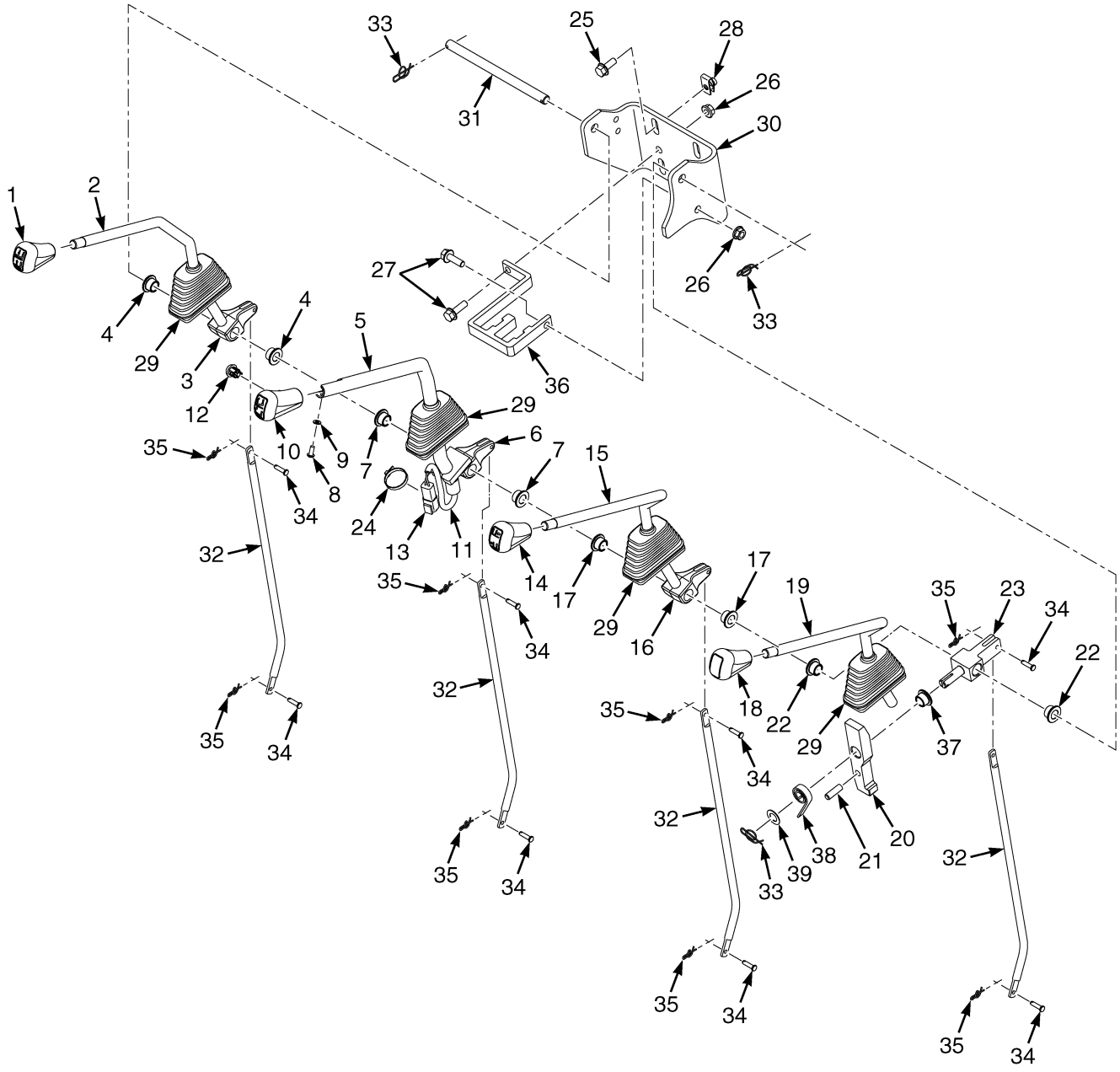

BP151285

ITEM	PART NO.	DESCRIPTION	QTY
1	4695854	Knob (Lift)	1

©2026 HYSTER COMPANY

ITEM	PART NO.	DESCRIPTION	QTY
2	4223252	Lever (Lift)	1
2	4223256	Control Lever	1
3	4223261	Yoke	1
4	4223263	Bushing	2
5	4275071	Lever (Tilt)	1
5	4276856	Lever	1
5	. . . . .	Lever	1
6	4223261	Yoke	1
7	4223263	Bushing	2
8	296152	Capscrew	1
9	320155	Washer	1
10	4695201	Knob	1
11	4695163	Wire Harness (Manual Interlock)	1
11	~~1570624~~		
	1463140	Terminal (Pin)	2
12	4694783	Push Button Switch	1
13	1561559	Connector (2 Pin)	1
13	1561755	Connector (Secondary Lock)	1
14	4695856	Knob (Side-Shift)	1
14	4696046	Knob (Auxiliary) (Option)	1
15	4223254	Lever (3rd Function)	1
15	4223258	Lever	1
16	4223261	Yoke	1
17	4223263	Bushing	2
18	4696046	Knob (Auxiliary)	1
19	4223266	Lever - 4th Function w/ detent	1
20	. . . . .	Plate	1
21	. . . . .	Pin	1
22	4223263	Bushing	2
23	4270982	Pivot - M-Hyd Lever Detent	1
23	4223276	Pivot - M-Hyd Levers	1
24	137852	Strap Clamp	1
25	4321958	Capscrew	4
26	~~1382472~~		
	1502543	Nut	2
27	1510113	Capscrew	2
28	1480237	Nut (Foldover)	4
29	2081863	Boot	4
30	4223251	Bracket - Hyd Levers	1
31	4223262	Pin - Control Levers	1
32	4223260	Link - Control Levers	4
33	1530011	Pin , Cotter	3
34	309109	Pin	8
35	1517361	Locking Ring Cotter Pin	8
36	4223269	Block - Clamping Levers	1
37	4223263	Bushing	1
38	175861	Spring	1
39	2305581	Shim (0.030 in.)	1

HYDRAULIC FAN DRIVE (FIGURE 16-57)
HOSE ARRANGEMENT — PST

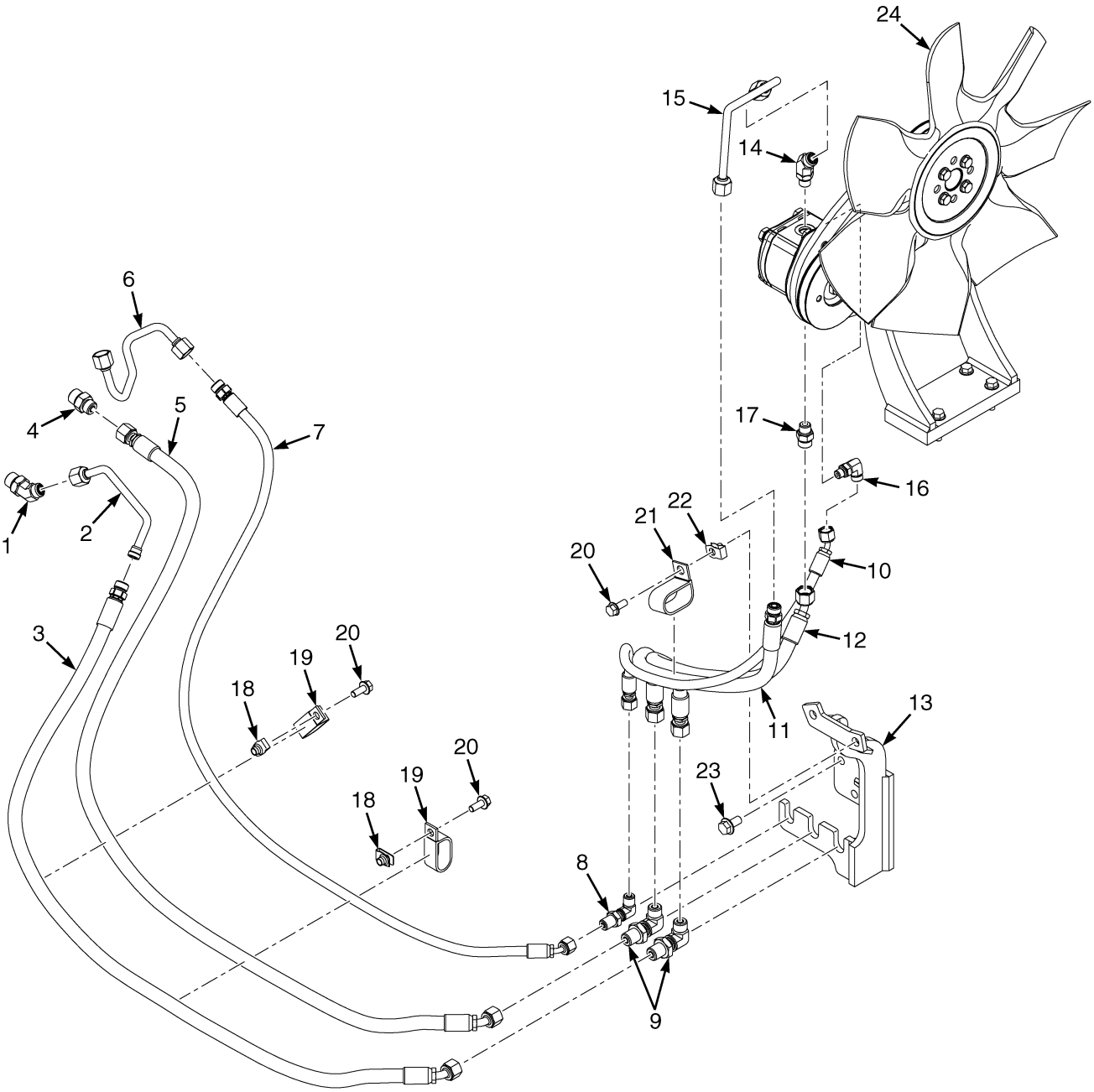

BP151307

©2026 HYSTER COMPANY

HYDRAULIC FAN DRIVE
HOSE ARRANGEMENT – PST

ITEM	PART NO.	DESCRIPTION	QTY
1	1516201	Fitting	1
2	4707394	Tube Assy - HFD (Valve B-Port)	1
3	4699761	Hose Assy - HFD (B / Bottom)	1
4	1486742	Fitting	1
5	4699760	Hose Assy - HFD (A / Top)	1
6	4694616	Tube Assy - HFD (Valve Tank Port)	1
7	4699762	Hose Assy - HFD Drain	1
8	1528578	Fitting	1
9	1528579	Fitting	2
10	4698541	Hose Assy - HFD (Drain)	1
11	4698537	Hose Assy - HFD Rear (Top / A)	1
12	4698540	Hose Assy - HFD Rear (Bottom / B)	1
13	4285390	Bulkhead Weldment - HFD	1
14	1516199	Fitting	1
15	4699763	Tube Assy - HFD (A / Top)	1
16	1487058	Fitting	1
17	1486740	Fitting	1
17	~~6992657~~		
	265787	O-Ring	1
18	1480237	Nut (Foldover)	2
19	176454	Clamp	2
20	1527880	Capscrew	3
21	1326652	Clamp	1
22	1398062	Nut (Fold Over)	1
23	1527883	Capscrew	3
24	. . . . .	Hydraulic Fan Drive (☞Figure 8-4)	1

HYDRAULIC FAN DRIVE (FIGURE 16-58)
HOSE ARRANGEMENT — HST

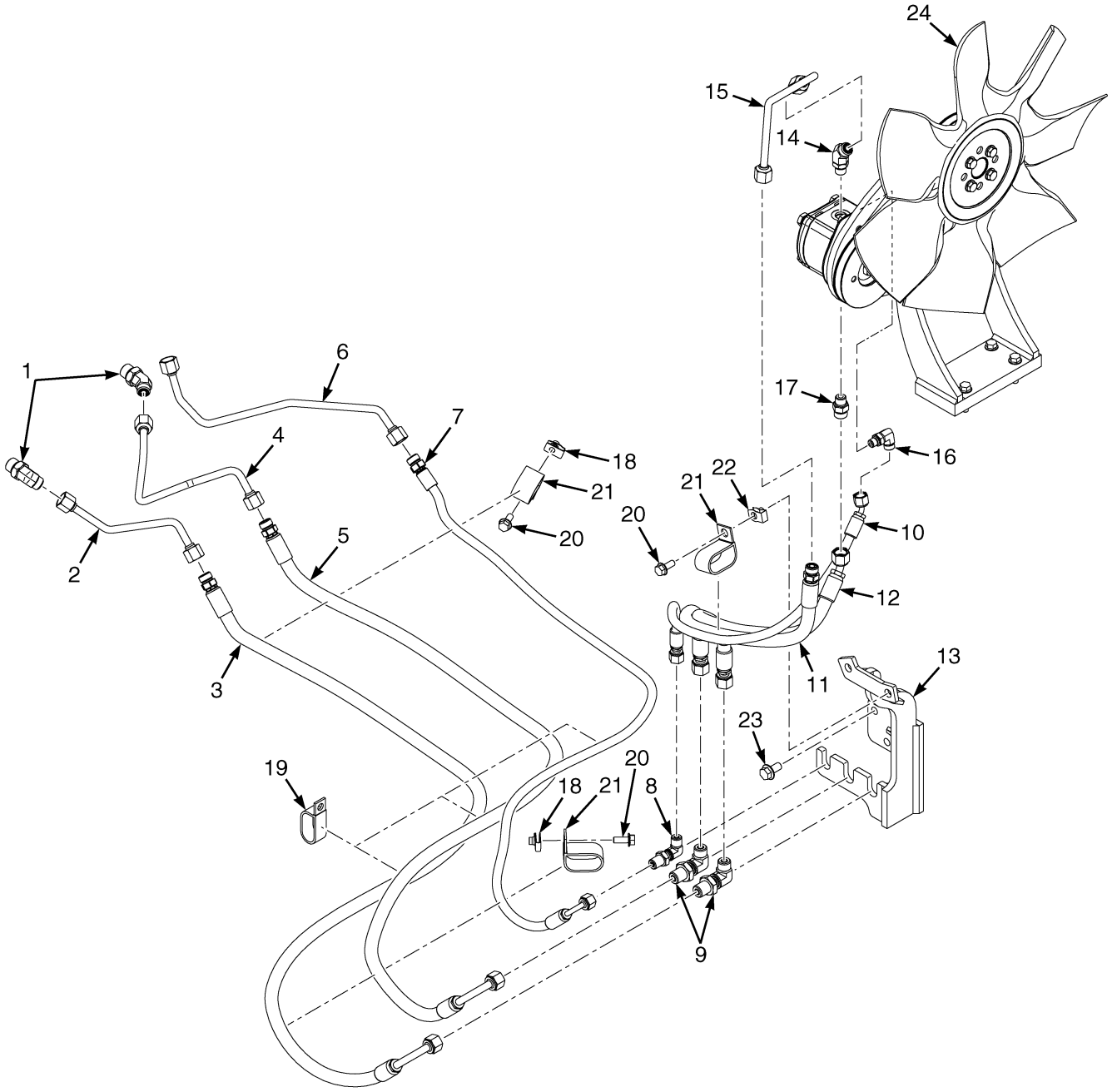

©2026 HYSTER COMPANY

HYDRAULIC FAN DRIVE
HOSE ARRANGEMENT – HST

ITEM	PART NO.	DESCRIPTION	QTY
1	1516201	Fitting	2
2	4710278	Tube Assy - HFD (Port 1B)	1
3	4694282	Hose Assy - HFD (B / Bottom)	1
4	4710277	Tube Assy - HFD (Port 1A)	1
5	4694281	Hose Assy - HFD (A / Top)	1
6	4694284	Tube Assy - HFD (Port SR)	1
7	4694283	Hose Assy - HFD (Drain)	1
8	1528578	Fitting	1
9	1528579	Fitting	2
10	4698541	Hose Assy - HFD (Drain)	1
11	4698537	Hose Assy - HFD Rear (Top / A)	1
12	4698540	Hose Assy - HFD Rear (Bottom / B)	1
13	4285390	Bulkhead Weldment - HFD	1
14	1516199	Fitting	1
15	4699763	Tube Assy - HFD (A / Top)	1
16	1487058	Fitting	1
17	1486740	Fitting	1
17	~~6992657~~		
	265787	O-Ring	1
18	1480237	Nut (Foldover)	2
19	176454	Clamp	1
20	1527880	Capscrew	3
21	1326652	Clamp	3
22	1398062	Nut (Fold Over)	1
23	1527883	Capscrew	3
24	. . . . .	Hydraulic Fan Drive (☞Figure 8-4)	1

HYDRAULIC PISTON PUMP (FIGURE 16-59)
POWERSHIFT TRANSMISSION

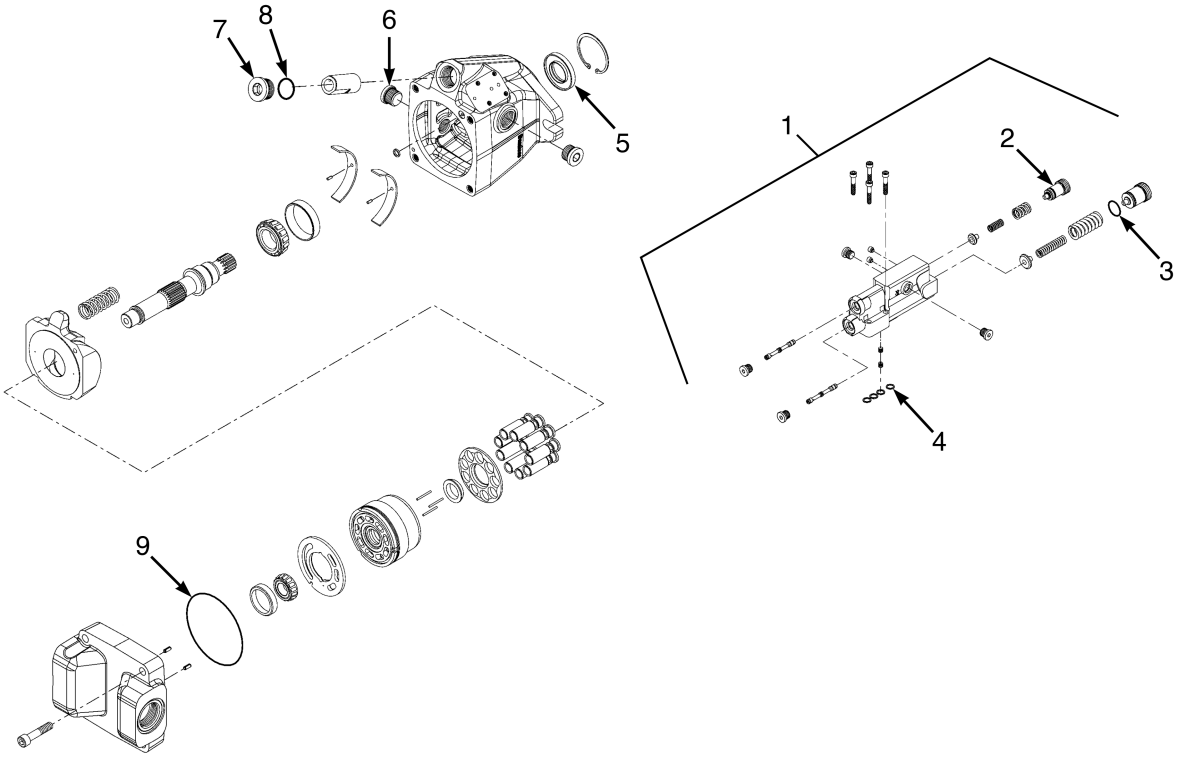

BP151103

See Service Manual for service procedures.
©2026 HYSTER COMPANY

KEY:
A: 30cc/Rev
B: 32cc/Rev

ITEM	PART NO.	DESCRIPTION	QTY A	QTY B
	4710799	Variable Disp Pump - 30 CC/Rev (PST)	1	..
	4710800	Variable Disp Pump - 32 CC/Rev (PST)	..	1
1	4335033	Kit-Hyd Control Valve (PST)	1	1
2	. . . . .	Plug (Adjusting)	1	1
3	. . . . .	O-Ring	1	1
4	. . . . .	Ring Seal	4	4
5	4275418	Seal	1	1
6	4311569	Plug	1	1
7	4311571	Plug (w/ o-ring) (32cc/Rev only)	..	1
8	. . . . .	O-Ring	1	1
9	. . . . .	O-Ring	1	1
	4275431	Kit - Seal Overhaul	1	1

HYDRAULIC PISTON PUMP (FIGURE 16-60)
HYDROSTATIC TRANSMISSION

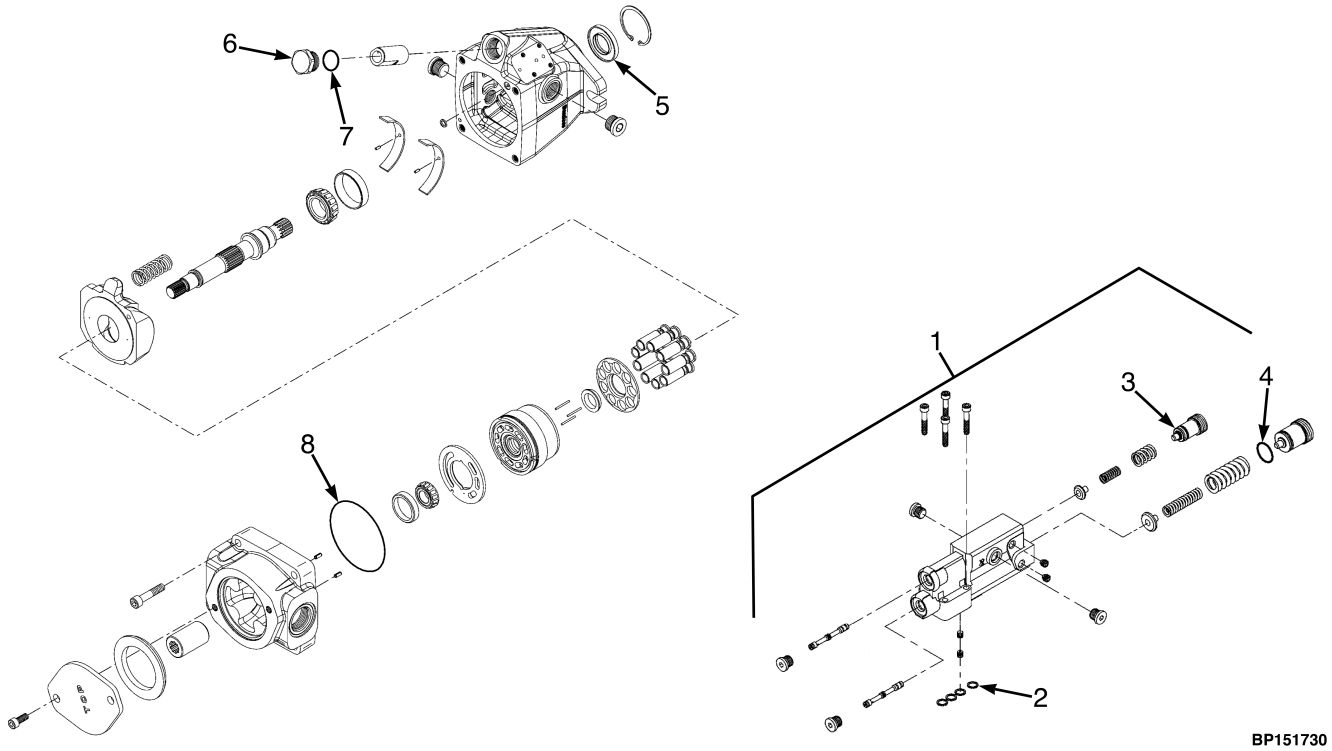

ITEM	PART NO.	DESCRIPTION	QTY
	4710801	Variable Disp Pump - 32 CC/Rev	1
1	~~1697250~~		
	4080506	Kit -Control	1
2	. . . . .	Sealing Ring	1
3	. . . . .	Plug	1
4	. . . . .	O-Ring	1
5	4275418	Seal	1
6	4311571	Plug (w/ o-ring)	1
7	. . . . .	O-Ring	1
8	. . . . .	O-Ring	1
	4275431	Kit - Seal Overhaul	1

See Service Manual for service procedures.
©2026 HYSTER COMPANY

MAST AND TILT CYLINDER INSTALLATION (FIGURE 16-61)

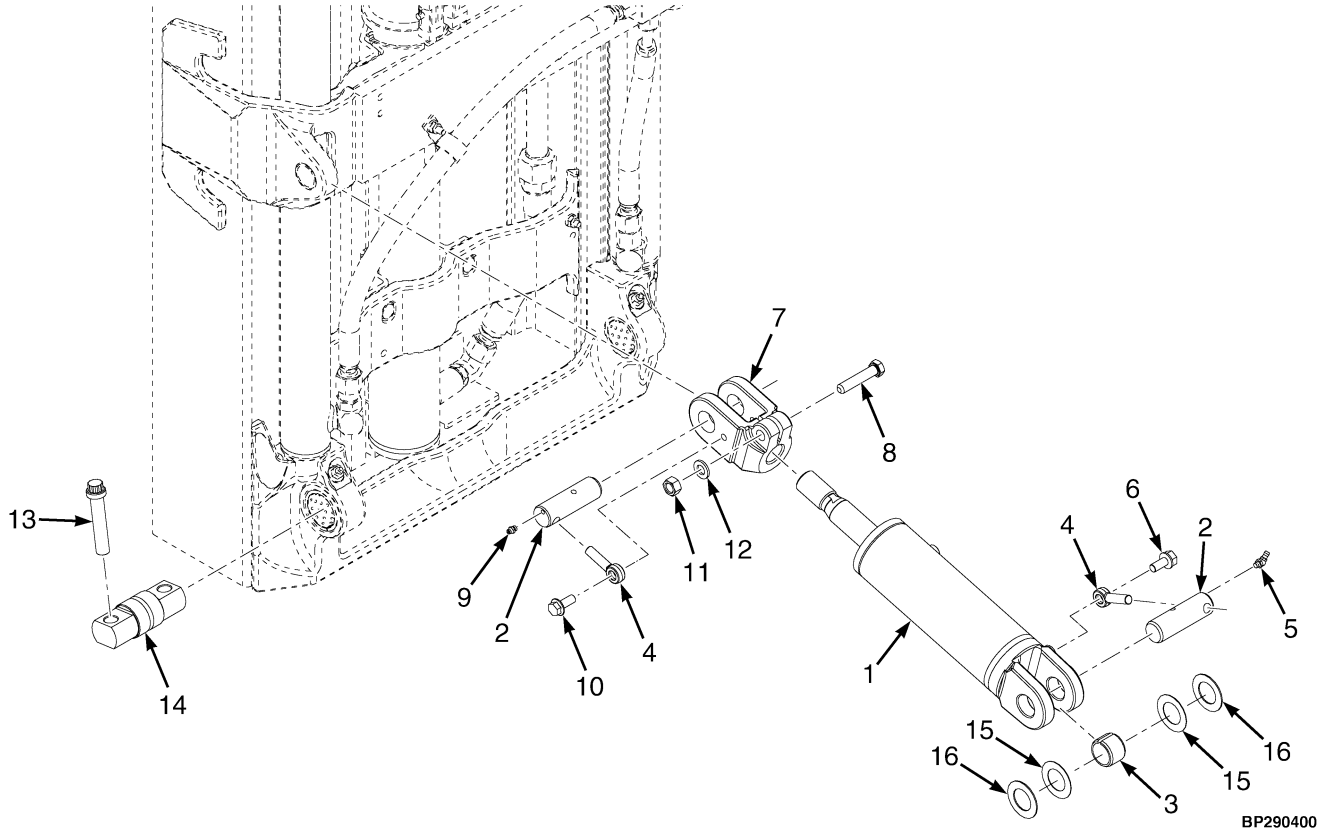

KEY:
A: Standard
B: W/ Tilt Sensor

ITEM	PART NO.	DESCRIPTION	QTY A	QTY B
1	. . . . .	Tilt Cylinders (☞Figure 16-36)	2	2
2	1533493	Pin	4	3
2	4302525	Pin (LH Mast Rod End Only)	..	1
3	300982	Bushing	2	2
4	1533494	Pin Anchor	4	3
5	16040	Grease Fitting	2	2
6	1586013	Capscrew	2	2
6	1663739	Bolt (Alternate Part)	2	2
7	**a** 4635566	Rod End	2	2
7	**b** 4635567	Rod End	2	2
8	1597381	Capscrew	2	2
9	16041	Grease Fitting	2	2
10	4043636	Capscrew	2	1
10	1527883	Capscrew (LH Mast Rod End Only)	..	1
11	1581848	Nut	2	2
12	1581852	Washer	2	2
13	1520290	Capscrew	4	4
14	1514269	Pin (Mast Mounting)	2	2
15	134675	Shim	AR	AR

KEY:
A: Standard
B: W/ Tilt Sensor

ITEM	PART NO.	DESCRIPTION	QTY A	QTY B
16	1325119	Shim	AR	AR

FOOTNOTES:

a H40A - H50A

b H60A - H70A

©2026 HYSTER COMPANY

SECTION 17
MAST-TWO STAGE LIMITED FREE-LIFT

DESCRIPTION	PAGE
CARRIAGE	
INTEGRAL SIDE-SHIFT - TWO STAGE LIMITED FREE-LIFT (H40A-H50A)	17-28
INTEGRAL SIDE-SHIFT - TWO STAGE LIMITED FREE-LIFT (H60A-H70A)	17-30
INTEGRAL SIDE-SHIFT AND STANDARD - MANUFACTURING OPTION	17-32
STANDARD - TWO STAGE LIMITED FREE-LIFT	17-25
CARRIAGE ASSEMBLY	
INTEGRAL SIDE-SHIFT - MANUFACTURING OPTION	17-34
HEADER HOSE AND ATTACHING PARTS	
TWO STAGE LIMITED FREE-LIFT	17-36
TWO STAGE LIMITED FREE-LIFT	17-54
MAIN LIFT CYLINDER ASSEMBLY	
TWO STAGE LIMITED FREE-LIFT - G507	17-10
TWO STAGE LIMITED FREE-LIFT - G562	17-22
TWO STAGE LIMITED FREE-LIFT - A2M1	17-45
TWO STAGE LIMITED FREE-LIFT - A2M2	17-51
MAST ASSEMBLY	
TWO STAGE LIMITED FREE-LIFT - G507 (→ 3/2023)	17-2
TWO STAGE LIMITED FREE-LIFT - G507 (3/2023 →)	17-6
TWO STAGE LIMITED FREE-LIFT - G562 (→ 3/2023)	17-14
TWO STAGE LIMITED FREE-LIFT - G562 (3/2023 →)	17-18
TWO STAGE LIMITED FREE-LIFT - A2M1	17-42
TWO STAGE LIMITED FREE-LIFT - A2M2	17-48
MAST ELECTRICAL	
WIRE TAKE-UP	17-38

©2026 HYSTER COMPANY

MAST ASSEMBLY (FIGURE 17-1)

TWO STAGE LIMITED FREE-LIFT — G507 (→ 3/2023)

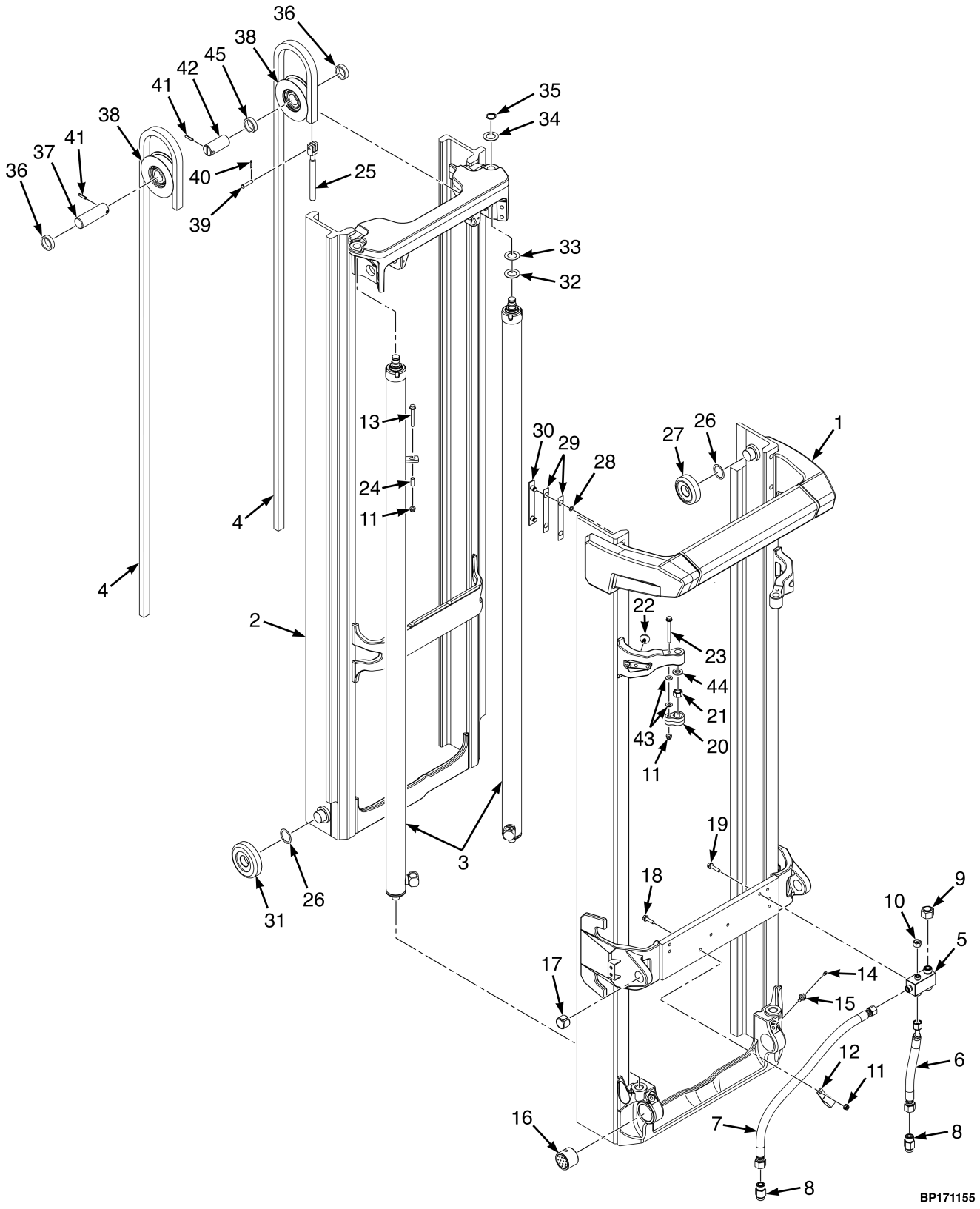

©2026 HYSTER COMPANY

MAST ASSEMBLY

TWO STAGE LIMITED FREE-LIFT – G507 (→ 3/2023)

G507

ITEM	DESCRIPTION 1 2 3 4	LIFT HEIGHT TO BOTTOM OF FORKS			
		2920 mm (115.0 in.)	3020 mm (118.9 in.)	3220 mm (126.8 in.)	3320 mm (130.7 in.)
	Mast Group Number	G507 2920	G507 3020	G507 3220	G507 3320
	Mast Assy	4669024	4669025	4669027	4669028
1	Outer Mast	4224651	4224652	4224654	4224655
2	Inner Mast	4224951	4224952	4224954	4224955
3	Lift Cylinder	4680802	4680803	4680805	4680806
4	Leaf Chain - Fixed Length	4250828	4250829	4250832	4250833

G507

ITEM	DESCRIPTION 1 2 3 4	LIFT HEIGHT TO BOTTOM OF FORKS			
		3420 mm (134.6 in.)	3520 mm (138.6 in.)	3620 mm (142.5 in.)	3720 mm (146.5 in.)
	Mast Group Number	G507 3420	G507 3520	G507 3620	G507 3720
	Mast Assy	4669029	4669030	4669031	4669032
1	Outer Mast	4224656	4224657	4224658	4224659
2	Inner Mast	4224956	4224957	4224958	4224959
3	Lift Cylinder	4680807	4680808	4680809	4680816
4	Leaf Chain - Fixed Length	4250834	4250836	4250837	4250838

G507

ITEM	DESCRIPTION 1 2 3 4	LIFT HEIGHT TO BOTTOM OF FORKS			
		3860 mm (152.0 in.)	4060 mm (159.8 in.)	4160 mm (163.8 in.)	4260 mm (167.7 in.)
	Mast Group Number	G507 3860	G507 4060	G507 4160	G507 4260
	Mast Assy	4669035	4669037	4669038	4669039
1	Outer Mast	4224662	4224664	4224665	4224666
2	Inner Mast	4224962	4224964	4224965	4224966
3	Lift Cylinder	4680818	4680823	4680826	4680828
4	Leaf Chain - Fixed Length	4250842	4250845	4250846	4250847

MAST ASSEMBLY

TWO STAGE LIMITED FREE-LIFT – G507 (→ 3/2023)

G507

ITEM	DESCRIPTION 1 2 3 4	LIFT HEIGHT TO BOTTOM OF FORKS			
		4460 mm (175.6 in.)	4560 mm (179.5 in.)	4760 mm (187.4 in.)	4960 mm (195.3 in.)
	Mast Group Number	G507 4460	G507 4560	G507 4760	G507 4960
	Mast Assy	4669041	4669042	4669044	4669048
1	Outer Mast	4224668	4224669	4224671	4224675
2	Inner Mast	4224968	4224969	4224971	4224975
3	Lift Cylinder	4680832	4680833	4681065	4681067
4	Leaf Chain - Fixed Length	4250850	4250851	4250854	4250859

G507

ITEM	DESCRIPTION 1 2 3 4	LIFT HEIGHT TO BOTTOM OF FORKS			
		5060 mm (199.2 in.)	5460 mm (215.0 in.)	5560 mm (218.9 in.)	6060 mm (238.6 in.)
	Mast Group Number	G507 5060	G507 5460	G507 5560	G507 6060
	Mast Assy	4669049	4669053	4669054	4669061
1	Outer Mast	4224676	4224680	4224681	4224688
2	Inner Mast	4224976	4224980	4224981	4224988
3	Lift Cylinder	4681068	4681072	4681073	4681078
4	Leaf Chain - Fixed Length	4250860	4250866	4250867	4250876

ITEM	PART NO.	DESCRIPTION	QTY
	a	Mast Assy	1
1	**a**	Outer Mast	1
1	4231443	Stubshaft	2
2	**a**	Inner Mast	1
2	4231443	Stubshaft	2
3	**a**	Lift Cylinder	2
4	**a**	Leaf Chain - Fixed Length	2
5	4245292	Manifold - Mast Connection Block	1
6	4700254	Hose Assy	1
7	4700253	Hose Assy	1
8	4700616	Hyd Velocity Fuse	2
9	1529017	Fitting (Blind Plug/Cap)	1
10	1529015	Cap	1
11	4187690	Locknut	3
12	1310611	Clamp	1
13	4189066	Capscrew	2
14	4269502	Capscrew (Lube)	2

See Service Manual for service procedures.
©2026 HYSTER COMPANY

MAST ASSEMBLY

TWO STAGE LIMITED FREE-LIFT – G507 (→ 3/2023)

ITEM	PART NO.	DESCRIPTION	QTY
15	16010	Grease Fitting	1
16	4033414	Bushing	2
17	300982	Bushing	2
18	4185430	Capscrew	1
19	4185431	Capscrew	2
20	4145952	Restraint	2
21	4029443	Nut , Castle	2
22	4275100	Rubber Pad	2
23	4185433	Capscrew	2
24	~~4309896~~		
	4369706	Spacer	2
25	4253178	Chain Anchor	2
26	129387	Shim (0.020 in.)	12
27	4249502	Load Roller	2
27	4249501	Load Roller (Optional)	2
28	104506	O-Ring	4
29	4253176	Shim	2
29	4253175	Shim	2
30	4253173	Wear Strip	2
31	4249506	Load Roller	2
31	4249505	Load Roller (Optional)	2
32	1333382	Washer (Mast Shim) (0.060 in.)	4
33	4242897	Shim	2
33	4242898	Shim (Optional)	2
34	2306942	Shim	2
35	131358	Snap Ring	2
35	248212	Snap Ring (Alternate Part)	2
36	1378691	Spacer	2
36	4356095	Spacer (Alternate Part)	2
37	4172274	Pin - Hose Sheave (LH)	1
38	4223285	Chain Sheave	2
38	4286492	Chain Sheave (Alternate Part)	2
39	4242899	Pin	2
40	~~2056815~~		
	15224	Cotter Pin	2
40	15222	Cotter Pin (Alternate Part)	2
41	302465	Roll Pin	2
42	4179320	Pin - Hose Sheave (RH)	1
43	**b** 1581851	Washer	4
44	**b** 1581854	Washer	2
45	4244113	Spacer	1

FOOTNOTES:

a Refer to Table

b → PENDING PER ECN 16122952

MAST ASSEMBLY (FIGURE 17-2)

TWO STAGE LIMITED FREE-LIFT — G507 (3/2023 →)

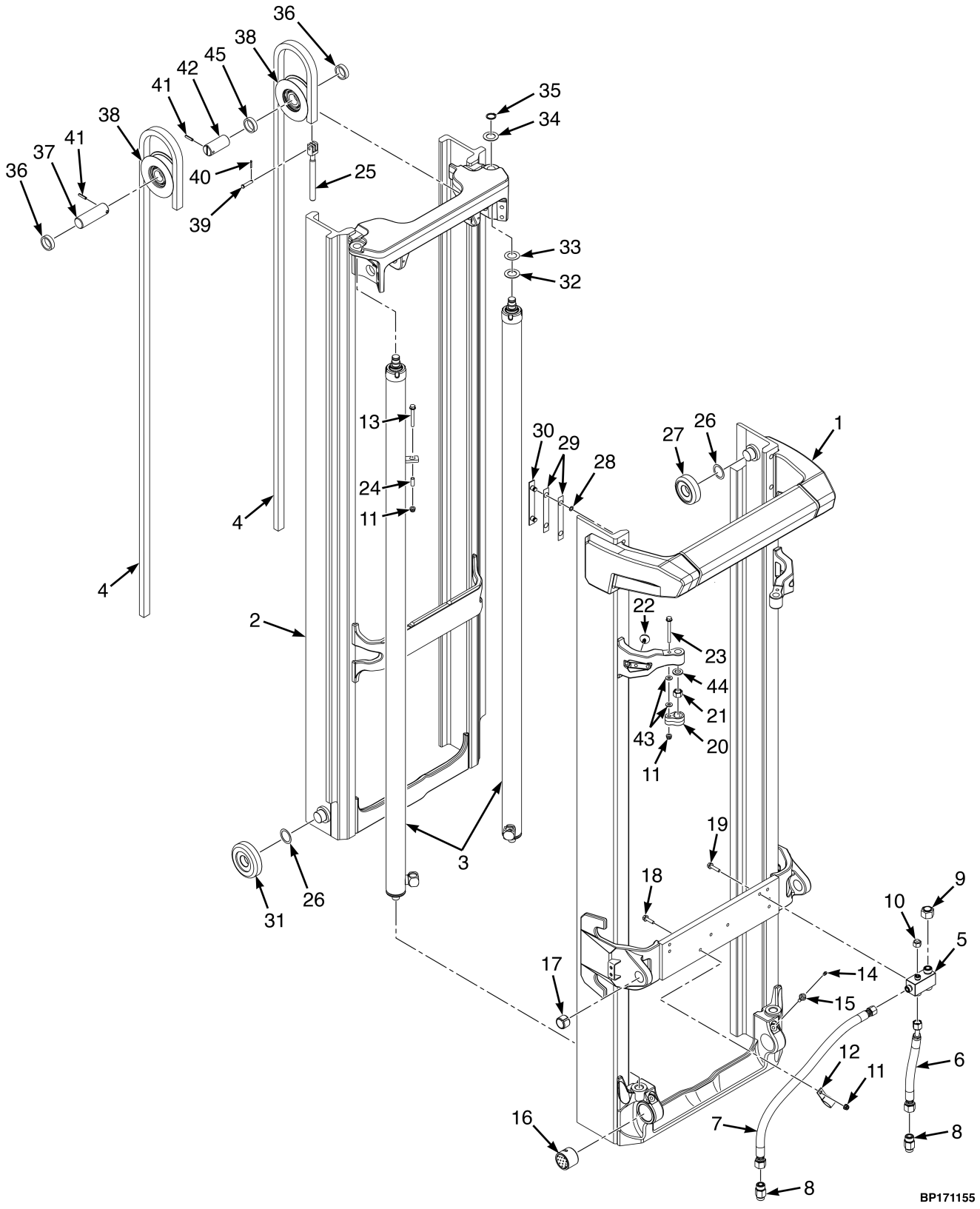

©2026 HYSTER COMPANY

MAST ASSEMBLY

TWO STAGE LIMITED FREE-LIFT – G507 (3/2023 →)

G507

ITEM	DESCRIPTION 1 2 3 4	LIFT HEIGHT TO BOTTOM OF FORKS			
		2920 mm (115.0 in.)	3020 mm (118.9 in.)	3220 mm (126.8 in.)	3320 mm (130.7 in.)
	Mast Group Number	G507 2920	G507 3020	G507 3220	G507 3320
	Mast Assy	4669024	4669025	4669027	4669028
1	Outer Mast	4224651	4224652	4224654	4224655
2	Inner Mast	4361754	4361755	4361757	4361758
3	Lift Cylinder	4680802	4680803	4680805	4680806
4	Leaf Chain - Fixed Length	4250828	4250829	4250832	4250833

G507

ITEM	DESCRIPTION 1 2 3 4	LIFT HEIGHT TO BOTTOM OF FORKS			
		3420 mm (134.6 in.)	3520 mm (138.6 in.)	3620 mm (142.5 in.)	3720 mm (146.5 in.)
	Mast Group Number	G507 3420	G507 3520	G507 3620	G507 3720
	Mast Assy	4669029	4669030	4669031	4669032
1	Outer Mast	4224656	4224657	4224658	4224659
2	Inner Mast	4361759	4361760	4361761	4361762
3	Lift Cylinder	4680807	4680808	4680809	4680816
4	Leaf Chain - Fixed Length	4250834	4250836	4250837	4250838

G507

ITEM	DESCRIPTION 1 2 3 4	LIFT HEIGHT TO BOTTOM OF FORKS			
		3860 mm (152.0 in.)	4060 mm (159.8 in.)	4160 mm (163.8 in.)	4260 mm (167.7 in.)
	Mast Group Number	G507 3860	G507 4060	G507 4160	G507 4260
	Mast Assy	4669035	4669037	4669038	4669039
1	Outer Mast	4224662	4224664	4224665	4224666
2	Inner Mast	4361763	4361765	4361766	4361767
3	Lift Cylinder	4680818	4680823	4680826	4680828
4	Leaf Chain - Fixed Length	4250842	4250845	4250846	4250847

MAST ASSEMBLY

TWO STAGE LIMITED FREE-LIFT – G507 (3/2023 →)

G507

ITEM	DESCRIPTION 1 2 3 4	LIFT HEIGHT TO BOTTOM OF FORKS			
		4460 mm (175.6 in.)	4560 mm (179.5 in.)	4760 mm (187.4 in.)	4960 mm (195.3 in.)
	Mast Group Number	G507 4460	G507 4560	G507 4760	G507 4960
	Mast Assy	4669041	4669042	4669044	4669048
1	Outer Mast	4224668	4224669	4224671	4224675
2	Inner Mast	4361769	4361770	4361772	4361774
3	Lift Cylinder	4680832	4680833	4681065	4681067
4	Leaf Chain - Fixed Length	4250850	4250851	4250854	4250859

G507

ITEM	DESCRIPTION 1 2 3 4	LIFT HEIGHT TO BOTTOM OF FORKS			
		5060 mm (199.2 in.)	5460 mm (215.0 in.)	5560 mm (218.9 in.)	6060 mm (238.6 in.)
	Mast Group Number	G507 5060	G507 5460	G507 5560	G507 6060
	Mast Assy	4669049	4669053	4669054	4669061
1	Outer Mast	4224676	4224680	4224681	4224688
2	Inner Mast	4361775	4361779	4361780	4361785
3	Lift Cylinder	4681068	4681072	4681073	4681078
4	Leaf Chain - Fixed Length	4250860	4250866	4250867	4250876

ITEM	PART NO.	DESCRIPTION	QTY
	a	Mast Assy	1
1	**a**	Outer Mast	1
1	4231443	Stubshaft	2
2	**a**	Inner Mast	1
2	4231443	Stubshaft	2
3	**a**	Lift Cylinder	2
4	**a**	Leaf Chain - Fixed Length	2
5	4245292	Manifold - Mast Connection Block	1
6	4700254	Hose Assy	1
7	4700253	Hose Assy	1
8	4700616	Hyd Velocity Fuse	2
9	1529017	Fitting (Blind Plug/Cap)	1
10	1529015	Cap	1
11	4187690	Locknut	3
12	1310611	Clamp	1
13	4189066	Capscrew	2
14	4269502	Capscrew (Lube)	2

See Service Manual for service procedures.
©2026 HYSTER COMPANY

MAST ASSEMBLY

TWO STAGE LIMITED FREE-LIFT – G507 (3/2023 →)

ITEM	PART NO.	DESCRIPTION	QTY
15	16010	Grease Fitting	1
16	4033414	Bushing	2
17	300982	Bushing	2
18	4185430	Capscrew	1
19	4185431	Capscrew	2
20	4145952	Restraint	2
21	4029443	Nut , Castle	2
22	4275100	Rubber Pad	2
23	4185433	Capscrew	2
24	~~4309896~~		
	4369706	Spacer	2
24	~~4309896~~		
	4369706	Spacer (Alternate Part)	2
25	4253178	Chain Anchor	2
26	129387	Shim (0.020 in.)	12
27	4249502	Load Roller	2
27	4249501	Load Roller (Optional)	2
28	104506	O-Ring	4
29	4253176	Shim	2
29	4253175	Shim	2
30	4253173	Wear Strip	2
31	4249506	Load Roller	2
31	4249505	Load Roller (Optional)	2
32	1333382	Washer (Mast Shim) (0.060 in.)	4
33	4242897	Shim	2
33	4242898	Shim (Optional)	2
34	2306942	Shim	2
35	131358	Snap Ring	2
35	248212	Snap Ring (Alternate Part)	2
36	1378691	Spacer	2
36	4356095	Spacer (Alternate Part)	2
37	4360354	Pin (LH)	1
38	4223285	Chain Sheave	2
38	4286492	Chain Sheave (Alternate Part)	2
39	4242899	Pin	2
40	~~2056815~~		
	15224	Cotter Pin	2
40	15222	Cotter Pin (Alternate Part)	2
41	302465	Roll Pin	2
42	4360625	Pin (RH)	1
43	**b** 1581851	Washer	4
44	**b** 1581854	Washer	2
45	4244113	Spacer	1

FOOTNOTES:

a Refer to Table

b → PENDING PER ECN 16122952

MAIN LIFT CYLINDER ASSEMBLY (FIGURE 17-3)
TWO STAGE LIMITED FREE-LIFT — G507

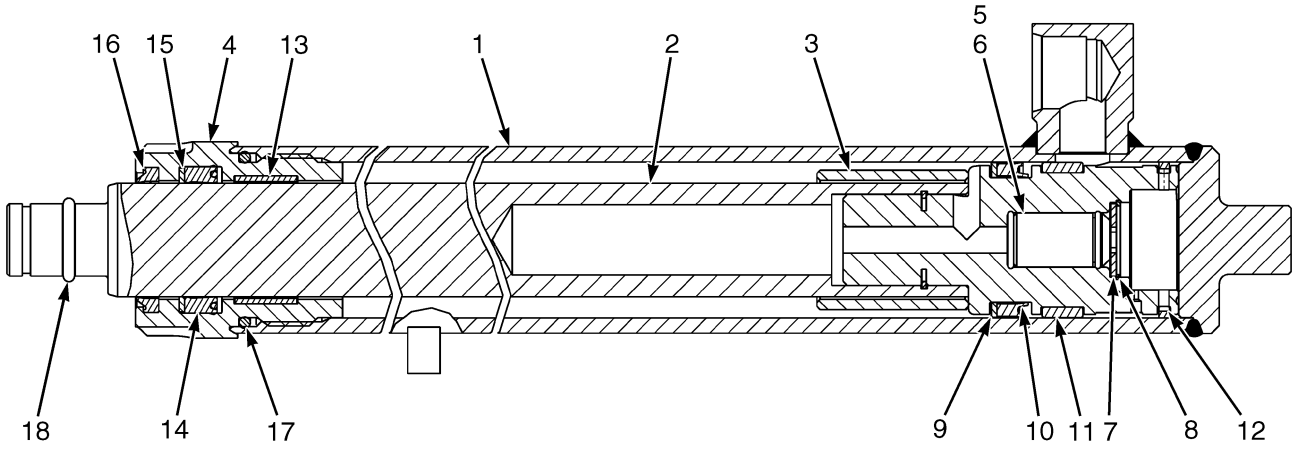

BP170987

MAIN LIFT CYLINDER ASSEMBLY
TWO STAGE LIMITED FREE-LIFT – G507

G507

ITEM	DESCRIPTION 1 2 3 4	LIFT HEIGHT TO BOTTOM OF FORKS			
		2920 mm (115.0 in.)	**3020 mm (118.9 in.)**	**3220 mm (126.8 in.)**	**3320 mm (130.7 in.)**
	Mast Group Number	**G507 2920**	**G507 3020**	**G507 3220**	**G507 3320**
	Cylinder Group Number	**8608707**	**8608708**	**8608710**	**8608711**
	Lift Cylinder	4680802	4680803	4680805	4680806
1	Tube Wldmt-Cylinder	4250692	4250693	4250695	4250696
2	Rod Assy	4246572	4246573	4246575	4246576
3	Spacer	----	----	----	----

©2026 HYSTER COMPANY

MAIN LIFT CYLINDER ASSEMBLY

TWO STAGE LIMITED FREE-LIFT – G507

G507

ITEM	DESCRIPTION 1 2 3 4	LIFT HEIGHT TO BOTTOM OF FORKS			
		3420 mm (134.6 in.)	**3520 mm (138.6 in.)**	**3620 mm (142.5 in.)**	**3720 mm (146.5 in.)**
	Mast Group Number	**G507 3420**	**G507 3520**	**G507 3620**	**G507 3720**
	Cylinder Group Number	**8608712**	**8608713**	**8608714**	**8608715**
	Lift Cylinder	4680807	4680808	4680809	4680816
1	Tube Wldmt-Cylinder	4250697	4250698	4250699	4250700
2	Rod Assy	4246577	4246578	4246579	4246580
3	Spacer	----	----	----	----

G507

ITEM	DESCRIPTION 1 2 3 4	LIFT HEIGHT TO BOTTOM OF FORKS			
		3860 mm (152.0 in.)	**4060 mm (159.8 in.)**	**4160 mm (163.8 in.)**	**4260 mm (167.7 in.)**
	Mast Group Number	**G507 3860**	**G507 4060**	**G507 4160**	**G507 4260**
	Cylinder Group Number	**8608716**	**8608718**	**8608719**	**8608720**
	Lift Cylinder	4680818	4680823	4680826	4680828
1	Tube Wldmt-Cylinder	4250701	4250703	4250704	4250705
2	Rod Assy	4246581	4246583	4246584	4246585
3	Spacer	2045872	2045872	2045872	2045872

G507

ITEM	DESCRIPTION 1 2 3 4	LIFT HEIGHT TO BOTTOM OF FORKS			
		4460 mm (175.6 in.)	**4560 mm (179.5 in.)**	**4760 mm (187.4 in.)**	**4960 mm (195.3 in.)**
	Mast Group Number	**G507 4460**	**G507 4560**	**G507 4760**	**G507 4960**
	Cylinder Group Number	**8608722**	**8608723**	**8608880**	**8608882**
	Lift Cylinder	4680832	4680833	4681065	4681067
1	Tube Wldmt-Cylinder	4250707	4250708	4250758	4250764
2	Rod Assy	4246587	4246588	4246667	4246669
3	Spacer	2045872	2045872	4681150	4681151

©2026 HYSTER COMPANY

MAIN LIFT CYLINDER ASSEMBLY

TWO STAGE LIMITED FREE-LIFT – G507

G507

ITEM	DESCRIPTION 1 2 3 4	LIFT HEIGHT TO BOTTOM OF FORKS			
		5060 mm (199.2 in.)	5460 mm (215.0 in.)	5560 mm (218.9 in.)	6060 mm (238.6 in.)
	Mast Group Number	G507 5060	G507 5460	G507 5560	G507 6060
	Cylinder Group Number	8608883	8608887	8608888	8608893
	Lift Cylinder	4681068	4681072	4681073	4681078
1	Tube Wldmt-Cylinder	4250765	4250769	4250770	4250775
2	Rod Assy	4246670	4246674	4246675	4246680
3	Spacer	4681151	4681151	4681151	4724060

ITEM	PART NO.	DESCRIPTION	QTY
	a	Lift Cylinder	2
1	**a**	Tube Wldmt-Cylinder	1
2	**a**	Rod Assy	1
3	**a**	Spacer	1
4	4615847	Gland	1
5	257913	Check Valve	1
6	190580	O-Ring	1
7	297531	Washer	1
7	637635	Washer (Optional)	1
8	187388	Snap Ring	1
9	638246	Back-Up Ring (Lift Height 2920-4460mm)	1
9	335012	Back-Up Ring (Lift Height 4760-6060mm)	1
10	1381064	Piston Seal (Lift Height 2920-4460mm)	1
10	1381063	Piston Seal (Lift Height 4760-6060mm)	1
11	1356750	Wear Ring	1
12	1360127	Piston Ring	1
13	322902	Wear Ring (Lift Height 2920-4460mm)	1
13	1380570	Wear Ring (Lift Height 4760-6060mm)	1
14	1356749	Rod Seal (Lift Height 2920-4460mm)	1
14	1356752	Rod Seal (Lift Height 4760-6060mm)	1
15	322824	Back-Up Ring (Lift Height 2920-4460mm)	1
16	1383063	Rod Wiper (Lift Height 2920-4460mm)	1
16	1383064	Rod Wiper (Lift Height 4760-6060mm)	1
17	~~4028986~~		
	92861	O-Ring (Lift Height 2920-4460mm)	1
17	59229	O-Ring (Lift Height 4760-6060mm)	1
18	60836	O-Ring	1
	4623973	Kit-Seal (Lift Height 2920-4460mm)	1
	4625475	Kit-Seal (Lift Height 4760-6060mm)	1
	1360128	Sleeve	1
	1360129	Sleeve	1

See Service Manual for service procedures.
©2026 HYSTER COMPANY

FOOTNOTES:

a Refer to Table

MAST ASSEMBLY (FIGURE 17-4)

TWO STAGE LIMITED FREE-LIFT — G562 (→ 3/2023)

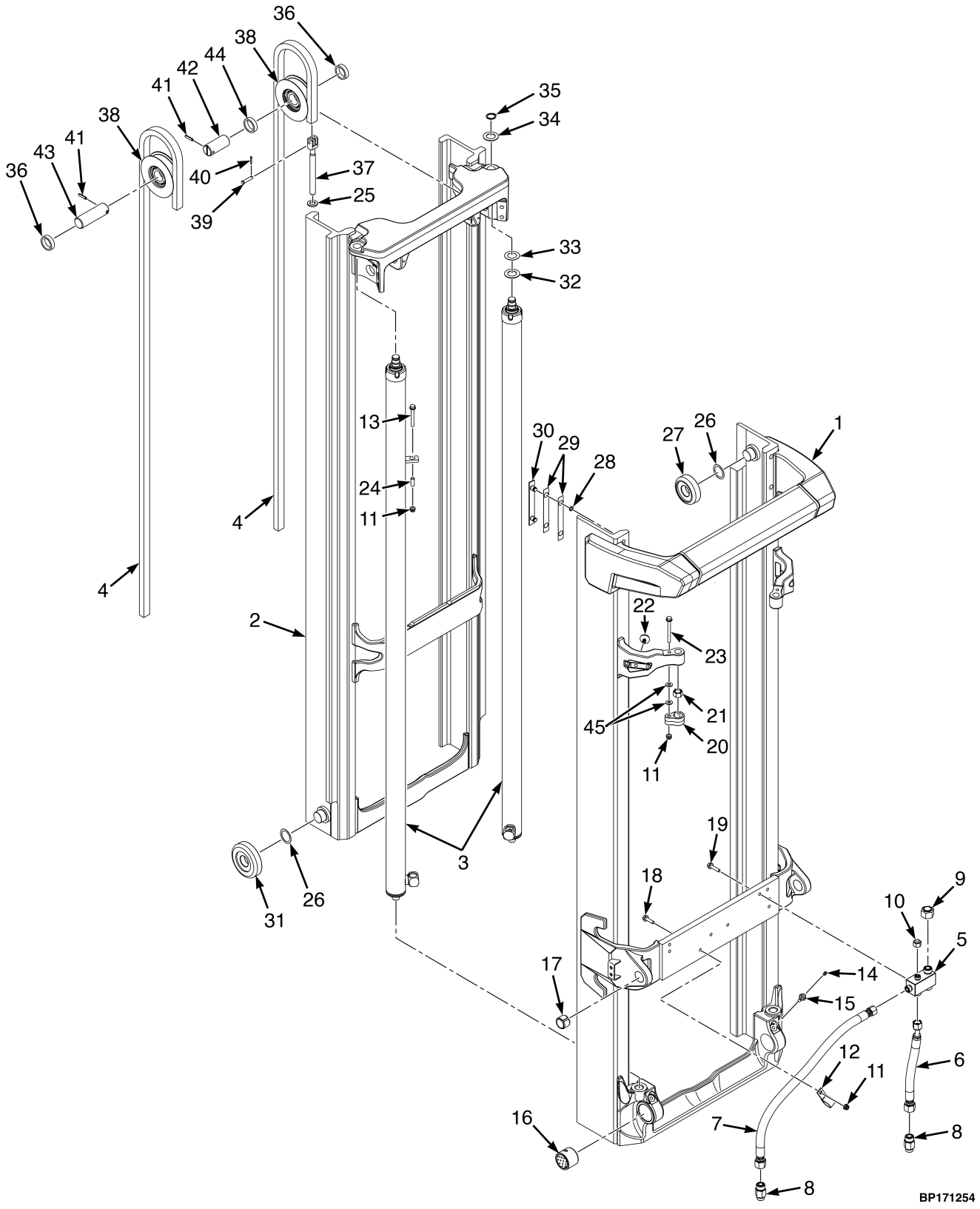

©2026 HYSTER COMPANY

MAST ASSEMBLY

TWO STAGE LIMITED FREE-LIFT – G562 (→ 3/2023)

G562

ITEM	DESCRIPTION 1 2 3 4	LIFT HEIGHT TO BOTTOM OF FORKS			
		2828 mm (111.3 in.)	2928 mm (115.3 in.)	3028 mm (119.2 in.)	3128 mm (123.1 in.)
	Mast Group Number	G562 2828	G562 2928	G562 3028	G562 3128
	Mast Assy	4668975	4668976	4668977	4668978
1	Outer Mast	4224652	4224653	4224654	4224655
2	Inner Mast	4224952	4224953	4224954	4224955
3	Lift Cylinder	4680997	4680998	4680999	4681000
4	Leaf Chain - Fixed Length	4250929	4250930	4250932	4250933

G562

ITEM	DESCRIPTION 1 2 3 4	LIFT HEIGHT TO BOTTOM OF FORKS			
		3228 mm (127.1 in.)	3328 mm (131.0 in.)	3428 mm (135.0 in.)	3528 mm (138.9 in.)
	Mast Group Number	G562 3228	G562 3328	G562 3428	G562 3528
	Mast Assy	4668979	4668980	4668981	4668982
1	Outer Mast	4224656	4224657	4224658	4224659
2	Inner Mast	4224956	4224957	4224958	4224959
3	Lift Cylinder	4681001	4681002	4681003	4681004
4	Leaf Chain - Fixed Length	4250934	4250936	4250937	4250938

G562

ITEM	DESCRIPTION 1 2 3 4	LIFT HEIGHT TO BOTTOM OF FORKS			
		3628 mm (142.8 in.)	3728 mm (146.8 in.)	3828 mm (150.7 in.)	4028 mm (158.6 in.)
	Mast Group Number	G562 3628	G562 3728	G562 3828	G562 4028
	Mast Assy	4668985	4668986	4668987	4668989
1	Outer Mast	4224662	4224663	4224664	4224666
2	Inner Mast	4224962	4224963	4224964	4224966
3	Lift Cylinder	4681005	4681006	4681007	4681037
4	Leaf Chain - Fixed Length	4250942	4250943	4250945	4250947

MAST ASSEMBLY

TWO STAGE LIMITED FREE-LIFT – G562 (→ 3/2023)

G562

ITEM	DESCRIPTION 1 2 3 4	LIFT HEIGHT TO BOTTOM OF FORKS			
		4128 mm (162.5 in.)	4428 mm (174.3 in.)	4528 mm (178.3 in.)	4728 mm (186.1 in.)
	Mast Group Number	G562 4128	G562 4428	G562 4528	G562 4728
	Mast Assy	4668990	4668993	4668994	4668998
1	Outer Mast	4224667	4224670	4224671	4224675
2	Inner Mast	4224967	4224970	4224971	4224975
3	Lift Cylinder	4681038	4681041	4681042	4681044
4	Leaf Chain - Fixed Length	4250949	4250953	4250954	4250959

G562

ITEM	DESCRIPTION 1 2 3 4	LIFT HEIGHT TO BOTTOM OF FORKS			
		5028 mm (198.0 in.)	5428 mm (213.7 in.)	5528 mm (217.6 in.)	5828 mm (229.4 in.)
	Mast Group Number	G562 5028	G562 5428	G562 5528	G562 5828
	Mast Assy	4669001	4669005	4669006	4669011
1	Outer Mast	4224678	4224682	4224683	4224688
2	Inner Mast	4224978	4224982	4224983	4224988
3	Lift Cylinder	4681047	4681051	4681052	4681055
4	Leaf Chain - Fixed Length	4250963	4250969	4250970	4250976

ITEM	PART NO.	DESCRIPTION	QTY
	a	Mast Assy	1
1	**a**	Outer Mast	1
1	4231443	Stubshaft	2
2	**a**	Inner Mast	1
2	4231443	Stubshaft	2
3	**a**	Lift Cylinder	2
4	**a**	Leaf Chain - Fixed Length	2
5	4245292	Manifold - Mast Connection Block	1
6	4700254	Hose Assy	1
7	4700253	Hose Assy	1
8	4700616	Hyd Velocity Fuse	2
9	1529017	Fitting (Blind Plug/Cap)	1
10	1529015	Cap	1
11	4187690	Locknut	3
12	1310611	Clamp	1
13	4189066	Capscrew	2
14	13957	Grease Fitting	2

See Service Manual for service procedures.
©2026 HYSTER COMPANY

MAST ASSEMBLY

TWO STAGE LIMITED FREE-LIFT – G562 (→ 3/2023)

ITEM	PART NO.	DESCRIPTION	QTY
14	16041	Grease Fitting (Optional)	2
15	4033412	Capscrew , Lubed	2
16	4033414	Bushing	2
17	300982	Bushing	2
18	4185430	Capscrew	1
19	4185431	Capscrew	2
20	4145952	Restraint	2
21	4029443	Nut , Castle	2
22	4176370	Rubber Pad	2
23	4185433	Capscrew	2
24	~~4309896~~		
	4369706	Spacer	2
25	**b** 1581854	Washer	2
26	129387	Shim (0.020 in.)	12
26	4263698	Shim (0.762 in.) (Optional)	AR
27	4249502	Load Roller	2
27	4249501	Load Roller (Optional)	2
28	104506	O-Ring	4
29	4253175	Shim	2
29	4253176	Shim (Optional)	2
30	4253173	Wear Strip	2
31	4249506	Load Roller	2
31	4249505	Load Roller (Optional)	2
32	1333382	Washer (Mast Shim) (0.060 in.)	4
33	4242897	Shim	2
33	4242898	Shim (Optional)	2
34	2306942	Shim	2
35	248212	Snap Ring	2
36	1378691	Spacer	3
36	4356095	Spacer (Alternate Part)	2
37	4253420	Chain Anchor	2
38	4223286	Chain Sheave	2
38	4286493	Chain Sheave (Alternate Part)	2
39	4242899	Pin	2
40	~~2056815~~		
	15224	Cotter Pin	2
40	15222	Cotter Pin (Alternate Part)	2
41	302465	Roll Pin	2
42	4179320	Pin - Hose Sheave (RH)	1
43	4172274	Pin - Hose Sheave (LH)	1
44	4244113	Spacer	1
45	**b** 1581851	Washer	4

FOOTNOTES:

a Refer to Table

b → PENDING PER ECN 16122952

MAST ASSEMBLY (FIGURE 17-5)

TWO STAGE LIMITED FREE-LIFT — G562 (3/2023 →)

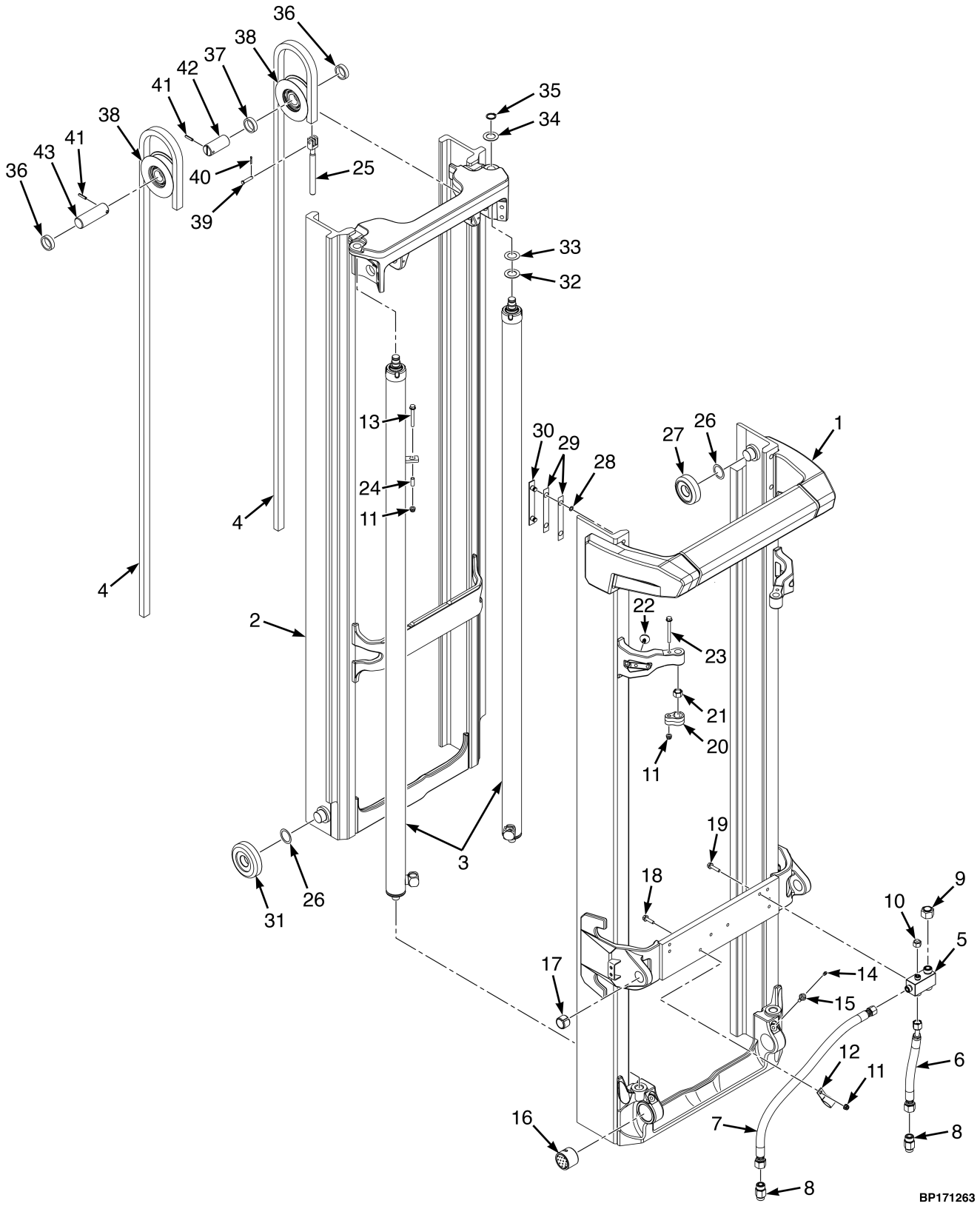

©2026 HYSTER COMPANY

MAST ASSEMBLY

TWO STAGE LIMITED FREE-LIFT – G562 (3/2023 →)

G562

ITEM	DESCRIPTION 1 2 3 4	LIFT HEIGHT TO BOTTOM OF FORKS				
		2828 mm (111.3 in.)	2928 mm (115.3 in.)	3028 mm (119.2 in.)	3128 mm (123.1 in.)	3228 mm (127.1 in.)
	Mast Group Number	G562 2828	G562 2928	G562 3028	G562 3128	G562 3228
	Mast Assy	4668975	4668976	4668977	4668978	4668979
1	Outer Mast	4224652	4224653	4224654	4224655	4224656
2	Inner Mast	4361755	4361756	4361757	4361758	4361759
3	Lift Cylinder	4680997	4680998	4680999	4681000	4681001
4	Leaf Chain - Fixed Length	4250929	4250930	4250932	4250933	4250934

G562

ITEM	DESCRIPTION 1 2 3 4	LIFT HEIGHT TO BOTTOM OF FORKS			
		3328 mm (131.0 in.)	3428 mm (135.0 in.)	3528 mm (138.9 in.)	3628 mm (142.8 in.)
	Mast Group Number	G562 3328	G562 3428	G562 3528	G562 3628
	Mast Assy	4668980	4668981	4668982	4668985
1	Outer Mast	4224657	4224658	4224659	4224662
2	Inner Mast	4361760	4361761	4361762	4361763
3	Lift Cylinder	4681002	4681003	4681004	4681005
4	Leaf Chain - Fixed Length	4250936	4250937	4250938	4250942

G562

ITEM	DESCRIPTION 1 2 3 4	LIFT HEIGHT TO BOTTOM OF FORKS			
		3728 mm (146.8 in.)	3828 mm (150.7 in.)	4028 mm (158.6 in.)	4128 mm (162.5 in.)
	Mast Group Number	G562 3728	G562 3828	G562 4028	G562 4128
	Mast Assy	4668986	4668987	4668989	4668990
1	Outer Mast	4224663	4224664	4224666	4224667
2	Inner Mast	4361764	4361765	4361767	4361768
3	Lift Cylinder	4681006	4681007	4681037	4681038
4	Leaf Chain - Fixed Length	4250943	4250945	4250947	4250949

MAST ASSEMBLY

TWO STAGE LIMITED FREE-LIFT – G562 (3/2023 →)

G562

ITEM	DESCRIPTION 1 2 3 4	LIFT HEIGHT TO BOTTOM OF FORKS			
		4428 mm (174.3 in.)	4528 mm (178.3 in.)	4628 mm (182.2 in.)	4728 mm (186.1 in.)
	Mast Group Number	G562 4428	G562 4528	G562 4628	G562 4728
	Mast Assy	4668993	4668994	4668997	4668998
1	Outer Mast	4224670	4224671	4224674	4224675
2	Inner Mast	4361771	4361772	4361773	4361774
3	Lift Cylinder	4681041	4681042	4681043	4681044
4	Leaf Chain - Fixed Length	4250953	4250954	4250958	4250959

G562

ITEM	DESCRIPTION 1 2 3 4	LIFT HEIGHT TO BOTTOM OF FORKS			
		5028 mm (198.0 in.)	5428 mm (213.7 in.)	5528 mm (217.6 in.)	5828 mm (229.4 in.)
	Mast Group Number	G562 5028	G562 5428	G562 5528	G562 5828
	Mast Assy	4669001	4669005	4669006	4669011
1	Outer Mast	4224678	4224682	4224683	4224688
2	Inner Mast	4361777	4361781	4361782	4361785
3	Lift Cylinder	4681047	4681051	4681052	4681055
4	Leaf Chain - Fixed Length	4250963	4250969	4250970	4250976

ITEM	PART NO.	DESCRIPTION	QTY
	a	Mast Assy	1
1	**a**	Outer Mast	1
1	4231443	Stubshaft	2
2	**a**	Inner Mast	1
2	4231443	Stubshaft	2
3	**a**	Lift Cylinder	2
4	**a**	Leaf Chain - Fixed Length	2
5	4245292	Manifold - Mast Connection Block	1
6	4700254	Hose Assy	1
7	4700253	Hose Assy	1
8	4700616	Hyd Velocity Fuse	2
9	1529017	Fitting (Blind Plug/Cap)	1
10	1529015	Cap	1
11	4187690	Locknut	3
12	1310611	Clamp	1
13	4189066	Capscrew	2
14	13957	Grease Fitting	2

See Service Manual for service procedures.
©2026 HYSTER COMPANY

MAST ASSEMBLY

TWO STAGE LIMITED FREE-LIFT – G562 (3/2023 →)

ITEM	PART NO.	DESCRIPTION	QTY
14	16041	Grease Fitting (Optional)	2
15	4033412	Capscrew , Lubed	2
16	4033414	Bushing	2
17	300982	Bushing	2
18	4185430	Capscrew	1
19	4185431	Capscrew	2
20	4145952	Restraint	2
21	4029443	Nut , Castle	2
22	4176370	Rubber Pad	2
23	4185433	Capscrew	2
24	~~4309896~~		
	4369706	Spacer	2
24	~~4309896~~		
	4369706	Spacer (Alternate Part)	2
25	4253420	Chain Anchor	2
26	129387	Shim (0.020 in.)	12
26	4263698	Shim (0.762 in.) (Optional)	AR
27	4249502	Load Roller	2
27	4249501	Load Roller (Optional)	2
28	104506	O-Ring	4
29	4253175	Shim	2
29	4253176	Shim (Optional)	2
30	4253173	Wear Strip	2
31	4249506	Load Roller	2
31	4249505	Load Roller (Optional)	2
32	1333382	Washer (Mast Shim) (0.060 in.)	4
33	4242897	Shim	2
33	4242898	Shim (Optional)	2
34	2306942	Shim	2
35	248212	Snap Ring	2
36	4356095	Spacer	2
37	4244113	Spacer	1
38	4286493	Chain Sheave	2
39	4242899	Pin	2
40	15222	Cotter Pin	2
41	302465	Roll Pin	2
42	4360625	Pin (RH)	1
43	4360354	Pin (LH)	1

FOOTNOTES:

a Refer to Table

MAIN LIFT CYLINDER ASSEMBLY (FIGURE 17-6)
TWO STAGE LIMITED FREE-LIFT — G562

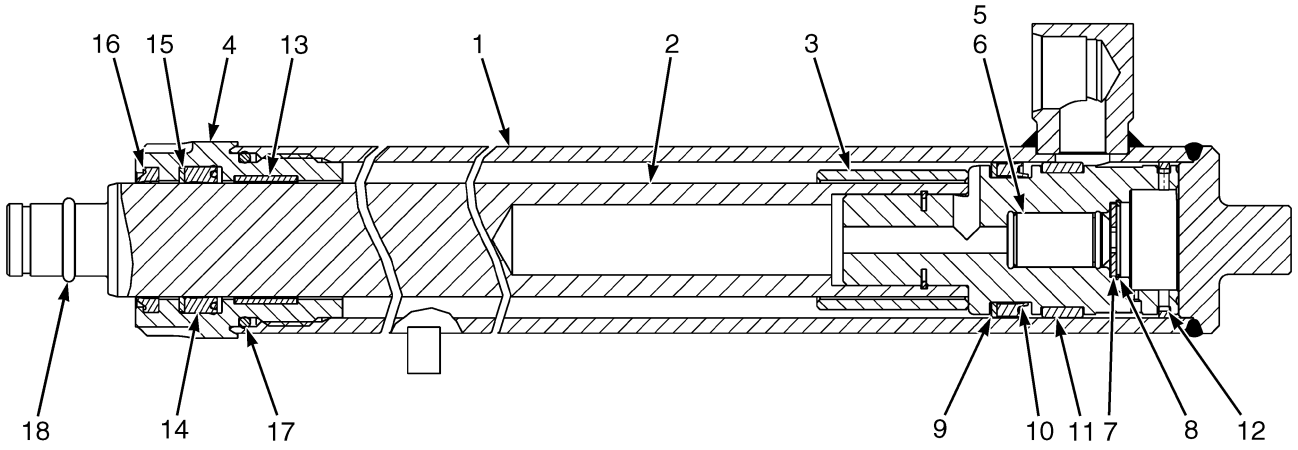

BP170987

MAIN LIFT CYLINDER ASSEMBLY
TWO STAGE LIMITED FREE-LIFT – G562

G562

ITEM	DESCRIPTION 1 2 3 4	LIFT HEIGHT TO BOTTOM OF FORKS				
		2828 mm (111.3 in.)	2928 mm (115.3 in.)	3028 mm (119.2 in.)	3128 mm (123.1 in.)	3228 mm (127.1 in.)
	Mast Group Number	G562 2828	G562 2928	G562 3028	G562 3128	G562 3228
	Cylinder Group Number	8608807	8608808	8608809	8608810	8608811
	Lift Cylinder	4680997	4680998	4680999	4681000	4681001
1	Tube Wldmt-Cylinder	4250742	4250743	4250744	4250745	4250746
2	Rod Assy	4246632	4246633	4246634	4246635	4246636
3	Spacer	1355711	1355711	1355711	1355711	1355711

©2026 HYSTER COMPANY

MAIN LIFT CYLINDER ASSEMBLY
TWO STAGE LIMITED FREE-LIFT – G562

G562

ITEM	DESCRIPTION 1 2 3 4	LIFT HEIGHT TO BOTTOM OF FORKS			
		3328 mm (131.0 in.)	3428 mm (135.0 in.)	3528 mm (138.9 in.)	3628 mm (142.8 in.)
	Mast Group Number	G562 3328	G562 3428	G562 3528	G562 3628
	Cylinder Group Number	8608812	8608813	8608814	8608815
	Lift Cylinder	4681002	4681003	4681004	4681005
1	Tube Wldmt-Cylinder	4250747	4250748	4250749	4250750
2	Rod Assy	4246637	4246638	4246639	4246640
3	Spacer	1355711	1355711	1355711	4658086

G562

ITEM	DESCRIPTION 1 2 3 4	LIFT HEIGHT TO BOTTOM OF FORKS			
		3728 mm (146.8 in.)	3828 mm (150.7 in.)	4028 mm (158.6 in.)	4128 mm (162.5 in.)
	Mast Group Number	G562 3728	G562 3828	G562 4028	G562 4128
	Cylinder Group Number	8608816	8608817	8608852	8608853
	Lift Cylinder	4681006	4681007	4681037	4681038
1	Tube Wldmt-Cylinder	4250751	4250752	4250754	4250755
2	Rod Assy	4246641	4246642	4246662	4246663
3	Spacer	4658086	4658086	2088124	2088124

G562

ITEM	DESCRIPTION 1 2 3 4	LIFT HEIGHT TO BOTTOM OF FORKS			
		4428 mm (174.3 in.)	4528 mm (178.3 in.)	4628 mm (182.2 in.)	4728 mm (186.1 in.)
	Mast Group Number	G562 4428	G562 4528	G562 4628	G562 4728
	Cylinder Group Number	8608856	8608857	8608858	8608859
	Lift Cylinder	4681041	4681042	4681043	4681044
1	Tube Wldmt-Cylinder	4250762	4250758	4250763	4250764
2	Rod Assy	4246666	4246667	4246668	4246669
3	Spacer	2088124	2088124	4625544	4625544

MAIN LIFT CYLINDER ASSEMBLY

TWO STAGE LIMITED FREE-LIFT – G562

G562

ITEM	DESCRIPTION 1 2 3 4	LIFT HEIGHT TO BOTTOM OF FORKS			
		5028 mm (198.0 in.)	5428 mm (213.7 in.)	5528 mm (217.6 in.)	5828 mm (229.4 in.)
	Mast Group Number	G562 5028	G562 5428	G562 5528	G562 5828
	Cylinder Group Number	8608862	8608866	8608867	8608870
	Lift Cylinder	4681047	4681051	4681052	4681055
1	Tube Wldmt-Cylinder	4250767	4250771	4250772	4250775
2	Rod Assy	4246672	4246676	4246677	4246680
3	Spacer	4625544	4625544	4625544	1355837

ITEM	PART NO.	DESCRIPTION	QTY
	a	Lift Cylinder	2
1	a	Tube Wldmt-Cylinder	1
2	a	Rod Assy	1
3	a	Spacer	1
4	4615848	Gland	1
5	257913	Check Valve	1
6	190580	O-Ring	1
7	297531	Washer	1
7	637635	Washer (Optional)	1
8	187388	Snap Ring	1
9	335012	Back-Up Ring	1
10	1381063	Piston Seal	1
11	1356751	Wear Ring	1
12	1356748	Piston Ring	1
13	322902	Wear Ring (Lift Height 2828-3828mm)	1
13	1380570	Wear Ring (Lift Height 4128-5828mm)	1
14	1356749	Rod Seal (Lift Height 2828-3828mm)	1
14	1356752	Rod Seal (Lift Height 4128-5828mm)	1
15	322824	Back-Up Ring	1
16	1383063	Rod Wiper (Lift Height 2828-3828mm)	1
16	1383064	Rod Wiper (Lift Height 4128-5828mm)	1
17	59229	O-Ring	1
18	100153	O-Ring	1
	4623974	Kit-Seal (Lift Height 2828-3828mm)	1
	4625475	Kit-Seal (Lift Height 4128-5828mm)	1
	1360131	Sleeve	1
	1360132	Sleeve	1

FOOTNOTES:

a Refer to Table

©2026 HYSTER COMPANY

CARRIAGE (FIGURE 17-7)

STANDARD — TWO STAGE LIMITED FREE-LIFT

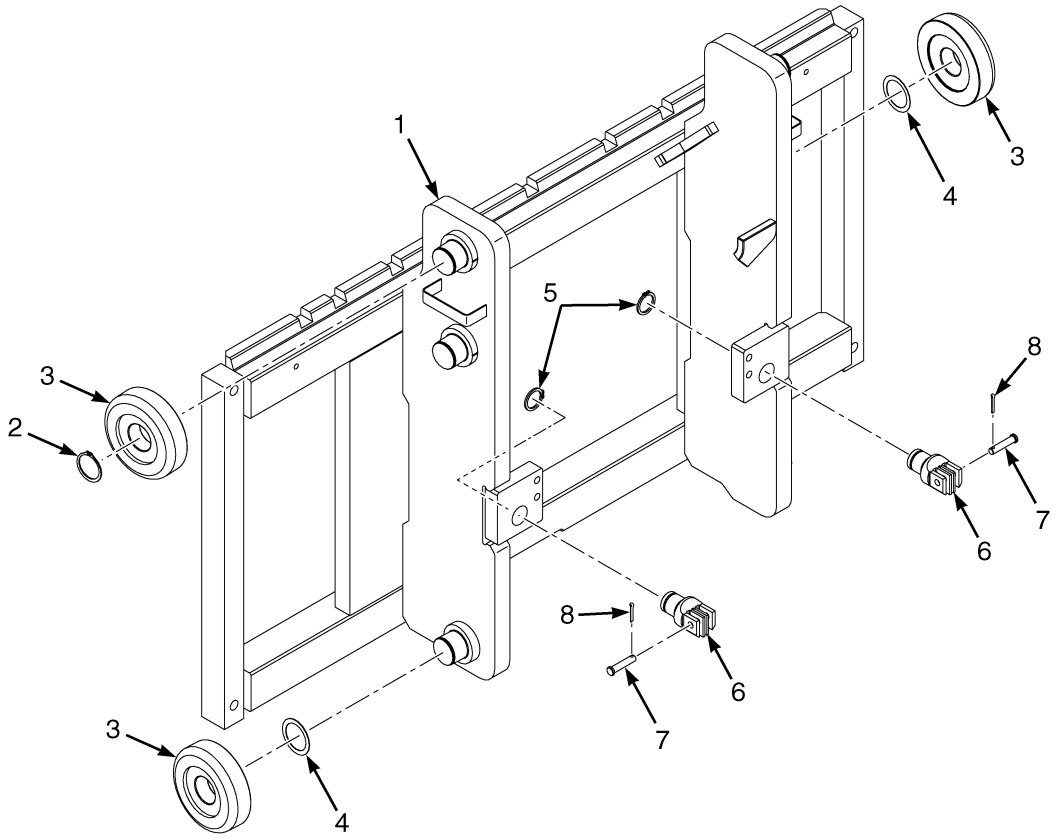

KEY:
A: Class II
B: Class III

ITEM	PART NO.	DESCRIPTION	QTY A	QTY B
	4689679	Carriage - Std, Class II	1	..
	4680894	Carriage - Std, Class III	..	1
	4680895	Carriage - Std, Class III	..	1
	4680896	Carriage - Std, Class III	..	1
1	4243067	Carriage Wldmt (Class II) (1067mm)	1	..
1	4224742	Carriage Wldmt (Class III) (42in) (1067mm)	..	1
1	4224743	Carriage Wldmt (Class III) (1220mm)	..	1
1	4224744	Carriage Wldmt - (Class III) (1372mm)	..	1
1	4258594	Stubshaft	6	6
2	58901	Snap Ring	2	2
3	4251096	Load Roller	6	6
3	4251095	Load Roller (Optional)	6	6
4	129387	Shim (0.020 in.)	AR	AR
4	4263698	Shim (0.762 in.) (Optional)	AR	AR
5	131358	Snap Ring	2	2
6	4253172	Chain Anchor	2	..
6	4253179	Chain Anchor	..	2
7	4242899	Pin	2	2

KEY:
A: Class II
B: Class III

ITEM	PART NO.	DESCRIPTION	QTY A	QTY B
8	~~2056815~~			
	15224	Cotter Pin	2	2

©2026 HYSTER COMPANY

NOTES

CARRIAGE (FIGURE 17-8)

INTEGRAL SIDE-SHIFT — TWO STAGE LIMITED FREE-LIFT (H40A-H50A)

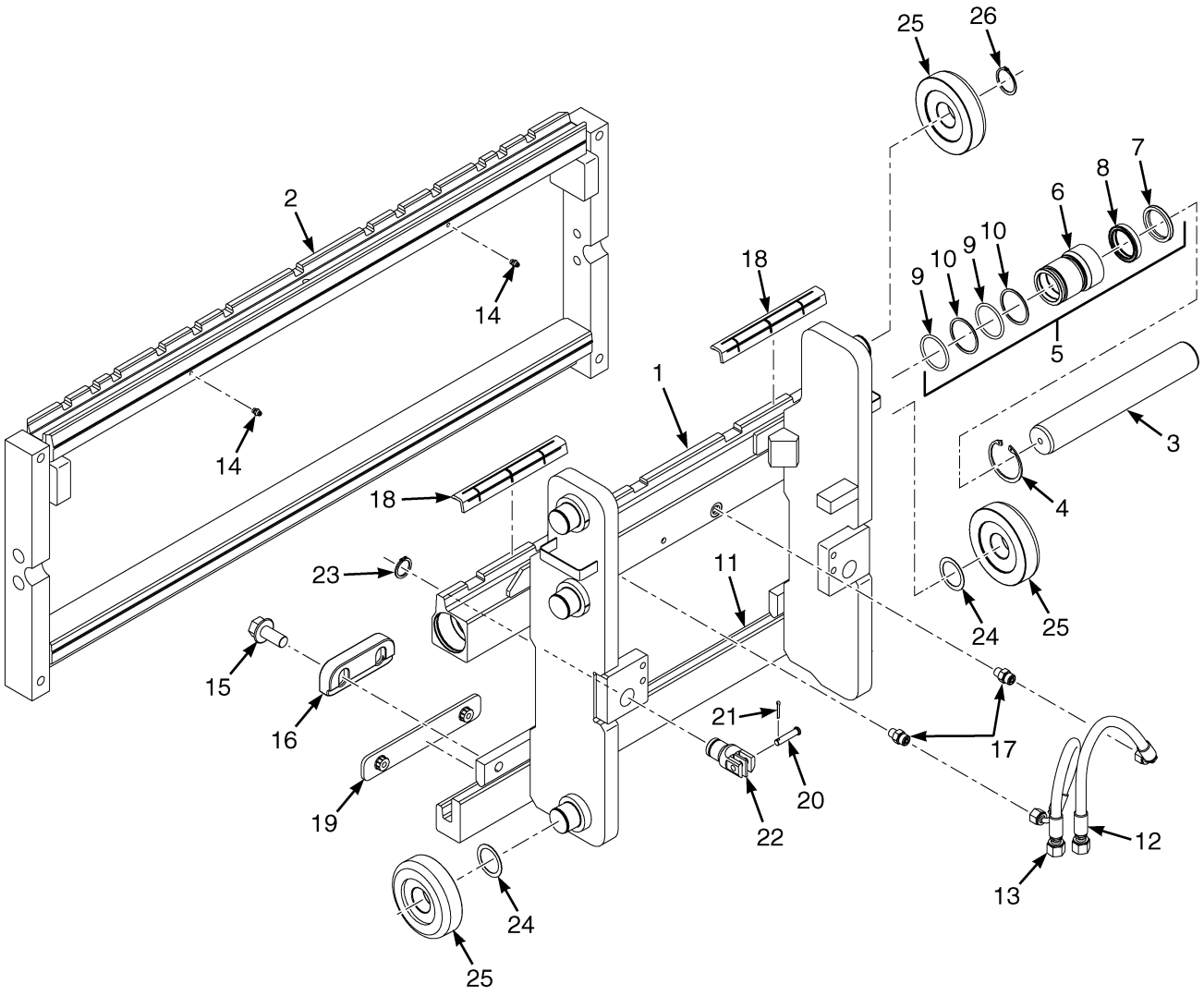

BP171074

©2026 HYSTER COMPANY

CARRIAGE

INTEGRAL SIDE-SHIFT – TWO STAGE LIMITED FREE-LIFT (H40A-H50A)

ITEM	PART NO.	DESCRIPTION	QTY
	a 4695335	Side-Shift Carriage (1067mm)	1
	4695333	Side-Shift Carriage (1067mm)	1
1	**a** 4266854	Carriage Wldmt (1067mm)	1
1	4243085	Carriage Wldmt (1067mm)	1
1	4258594	Stubshaft	6
2	4330059	Frame (42in)	1
3	4090982	Cylinder Rod	2
4	128444	Snap Ring	2
5	4215251	Gland Assembly	2
6	4215095	Gland	2
7	1383064	Rod Wiper	2
8	2032488	Seal	2
9	55407	O-Ring	4
10	153919	Back-Up Ring	4
11	4292621	Bearing - Strip Lower Carriage Bar (1067mm)	1
12	4696104	Hose Assy	1
13	4696103	Hose Assy	1
14	4318979	Grease Fitting	2
15	4239917	Capscrew	4
16	4687153	Hook (Lower)	2
17	4116399	Fitting , Straight	2
18	4693335	Bearing (Upper)	2
19	4693334	Bearing (Lower)	2
20	4242899	Pin	2
21	~~2056815~~		
	15224	Cotter Pin	2
22	4253172	Chain Anchor	2
23	131358	Snap Ring	2
24	129387	Shim (0.020 in.)	AR
24	4263698	Shim (0.762 in.) (Optional)	AR
25	4251096	Load Roller	6
25	4251095	Load Roller (Optional)	6
26	58901	Snap Ring	2
	4217294	Kit-Seal	1

FOOTNOTES:

a Large Tire Variant Only

©2026 HYSTER COMPANY

CARRIAGE (FIGURE 17-9)

INTEGRAL SIDE-SHIFT — TWO STAGE LIMITED FREE-LIFT (H60A-H70A)

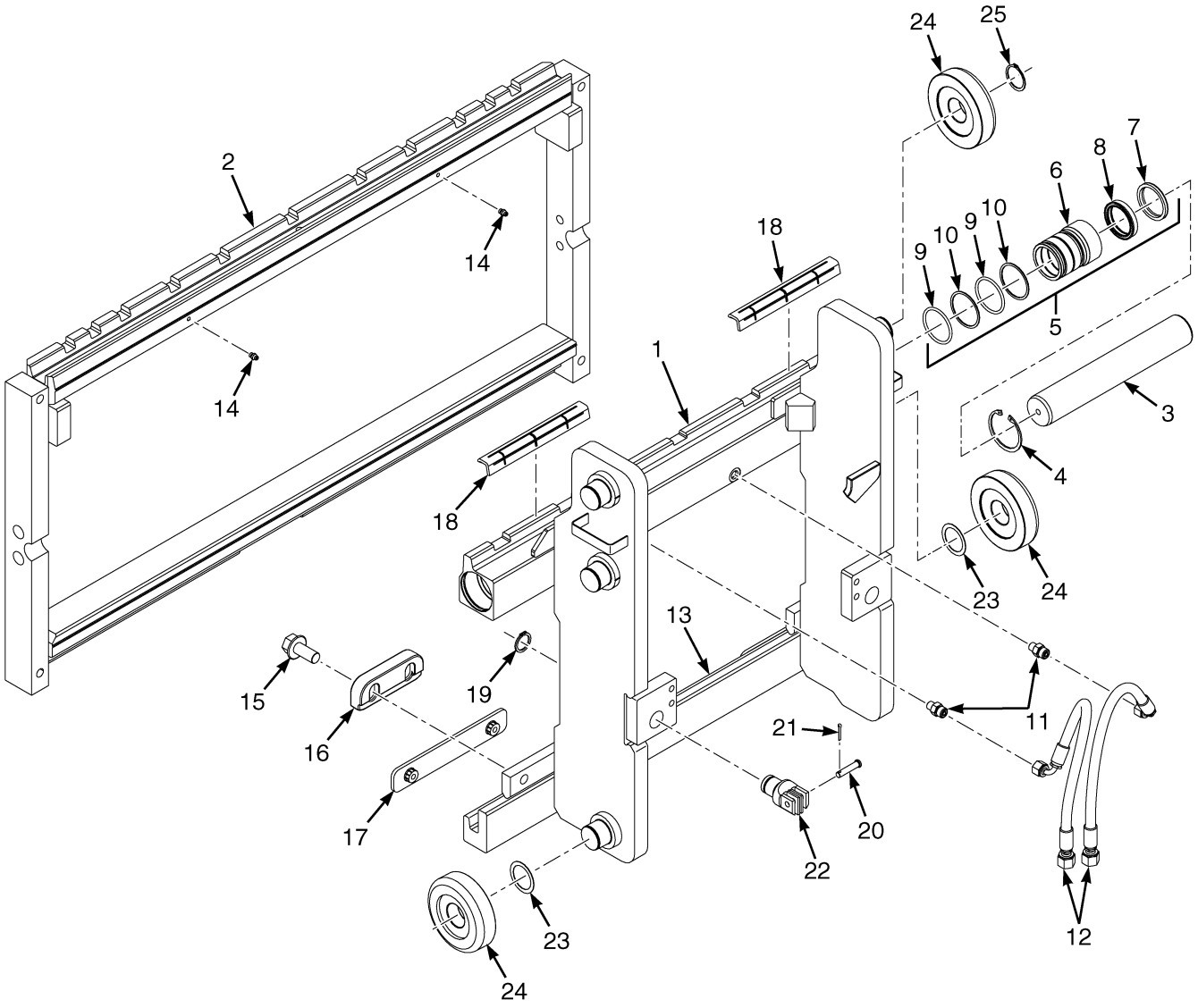

©2026 HYSTER COMPANY

CARRIAGE

INTEGRAL SIDE-SHIFT – TWO STAGE LIMITED FREE-LIFT (H60A-H70A)

ITEM	PART NO.	DESCRIPTION	QTY
	4695326	Side-Shift Carriage	1
	4695327	Side-Shift Carriage	1
	4695328	Side-Shift Carriage	1
1	4243071	Carriage Wldmt (42in)	1
1	4243072	Carriage Wldmt	1
1	4243073	Carriage Wldmt	1
1	4258594	Stubshaft	6
2	4330083	Frame (42in)	1
2	4330084	Frame (48in)	1
2	4330085	Frame (54in) (1372mm)	1
3	4090984	Cylinder Rod (1067mm)	2
3	4090985	Cylinder Rod (1219mm/1372mm)	2
4	304522	Snap Ring	2
5	4215252	Gland (Assembly) (Class III)	2
6	4215096	Gland	1
7	1383065	Rod Wiper	1
8	378440	Seal	1
9	~~4028986~~		
	92861	O-Ring	2
10	147972	Back-Up Ring	2
11	4116399	Fitting , Straight	2
12	4684711	Hose Assy	2
13	4292621	Bearing - Strip Lower Carriage Bar (1067mm)	1
13	4292622	Bearing - Strip Lower Carriage Bar (1219mm)	1
13	4292623	Bearing - Strip Lower Carriage Bar (1372mm)	1
14	4318979	Grease Fitting	2
15	4239917	Capscrew	4
16	4687153	Hook (Lower)	2
17	4693334	Bearing (Lower)	2
18	4693335	Bearing (Upper)	2
19	131358	Snap Ring	2
20	4242899	Pin	2
21	~~2056815~~		
	15224	Cotter Pin	2
22	4253179	Chain Anchor	2
23	129387	Shim (0.020 in.)	AR
23	4263698	Shim (0.762 in.) (Optional)	AR
24	4251096	Load Roller	6
24	4251095	Load Roller (Optional)	6
25	58901	Snap Ring	2
	4217295	Kit-Seal	1

CARRIAGE (FIGURE 17-10)

INTEGRAL SIDE-SHIFT AND STANDARD — MANUFACTURING OPTION

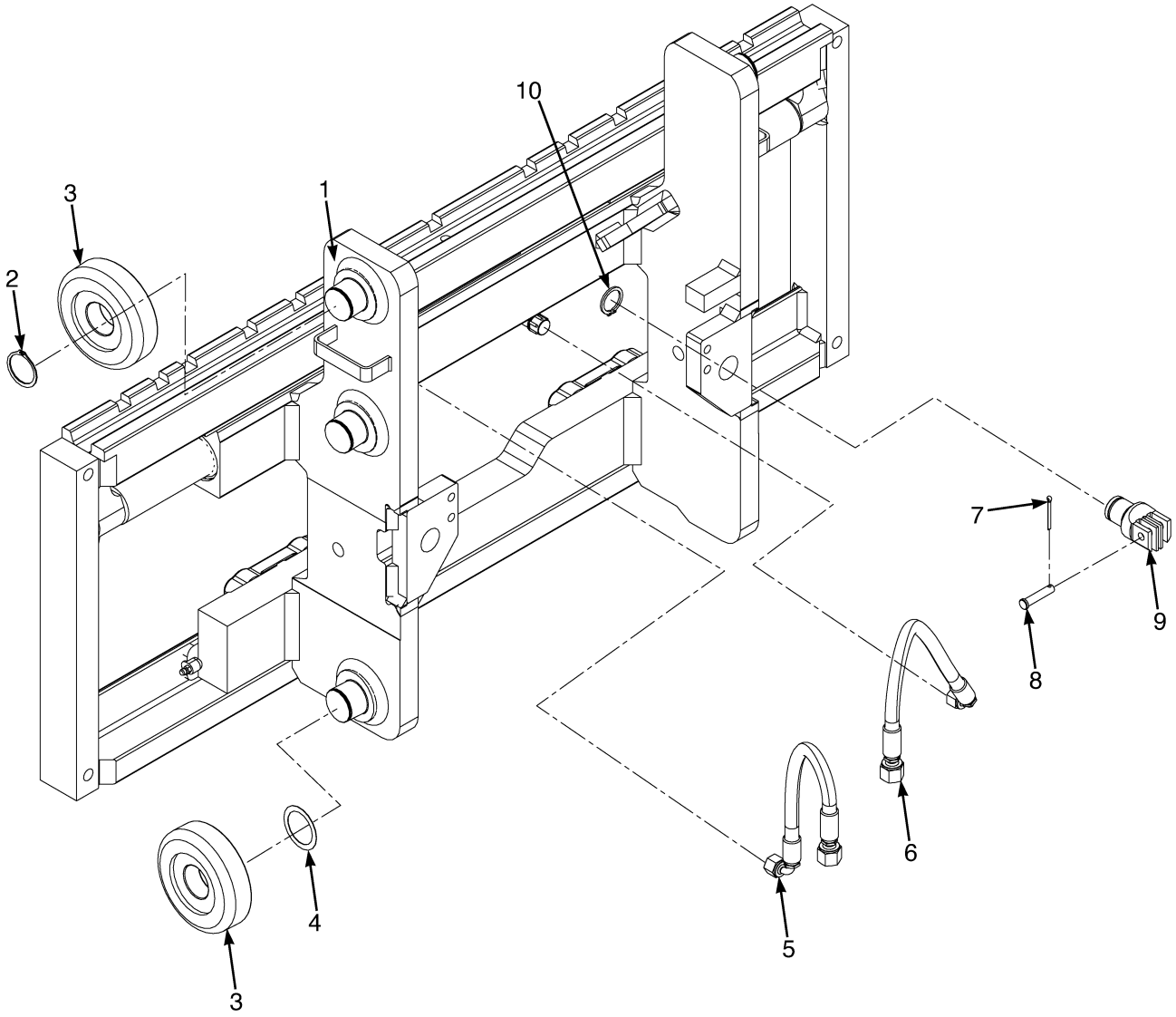

BP290512

©2026 HYSTER COMPANY

CARRIAGE

INTEGRAL SIDE-SHIFT AND STANDARD – MANUFACTURING OPTION

KEY:
A: ISS Cls II
B: ISS Cls III
C: Std Cls II
D: Std Cls III

ITEM	PART NO.	DESCRIPTION	QTY A	QTY B	QTY C	QTY D
	4725371	Side-Shift Carriage (Class II)	1	..	..	..
	4725375	Side-Shift Carriage (Class III) (42in)	..	1	..	..
	4725374	Side-Shift Carriage (Class III) (48in)	..	1	..	..
	4732089	Carriage (Class II) (42in)	..	..	1	..
	4732090	Carriage (Class III) (42in)	..	..	..	1
1	4724844	Side-Shift Carriage (Class II) (42in) (☞Figure 17-11)	1	..	..	..
1	4724845	Side-Shift Carriage (Class III) (42in) (☞Figure 17-11)	..	1	..	..
1	4724842	Side-Shift Carriage (Class III) (48in) (☞Figure 17-11)	..	1	..	..
1	4243067	Carriage Wldmt (Class II)	..	..	1	..
1	4224742	Carriage Wldmt (Class III) (42in)	..	..	..	1
2	58901	Snap Ring	2	2	2	2
3	4251096	Load Roller	6	6	6	6
3	4251095	Load Roller (Optional)	6	6	6	6
4	129387	Shim (0.020 in.)	AR	AR	AR	AR
4	4263698	Shim (0.762 in.) (Optional)	AR	AR	AR	AR
5	4696103	Hose Assy (Class II)	1	..	..	..
5	4684711	Hose Assy (Class III)	..	1	..	..
6	4696104	Hose Assy (Class II)	1	..	..	..
6	4684711	Hose Assy (Class III)	..	1	..	..
7	~~2056815~~					
	15224	Cotter Pin	2	2	2	2
8	4242899	Pin	2	2	2	2
9	4342153	Chain Anchor (Class II)	2	..	2	..
9	~~4342154~~					
	4397086	Chain Anchor (Class III)	..	2	..	2
10	131358	Snap Ring	2	2	2	2

CARRIAGE ASSEMBLY (FIGURE 17-11)
INTEGRAL SIDE-SHIFT — MANUFACTURING OPTION

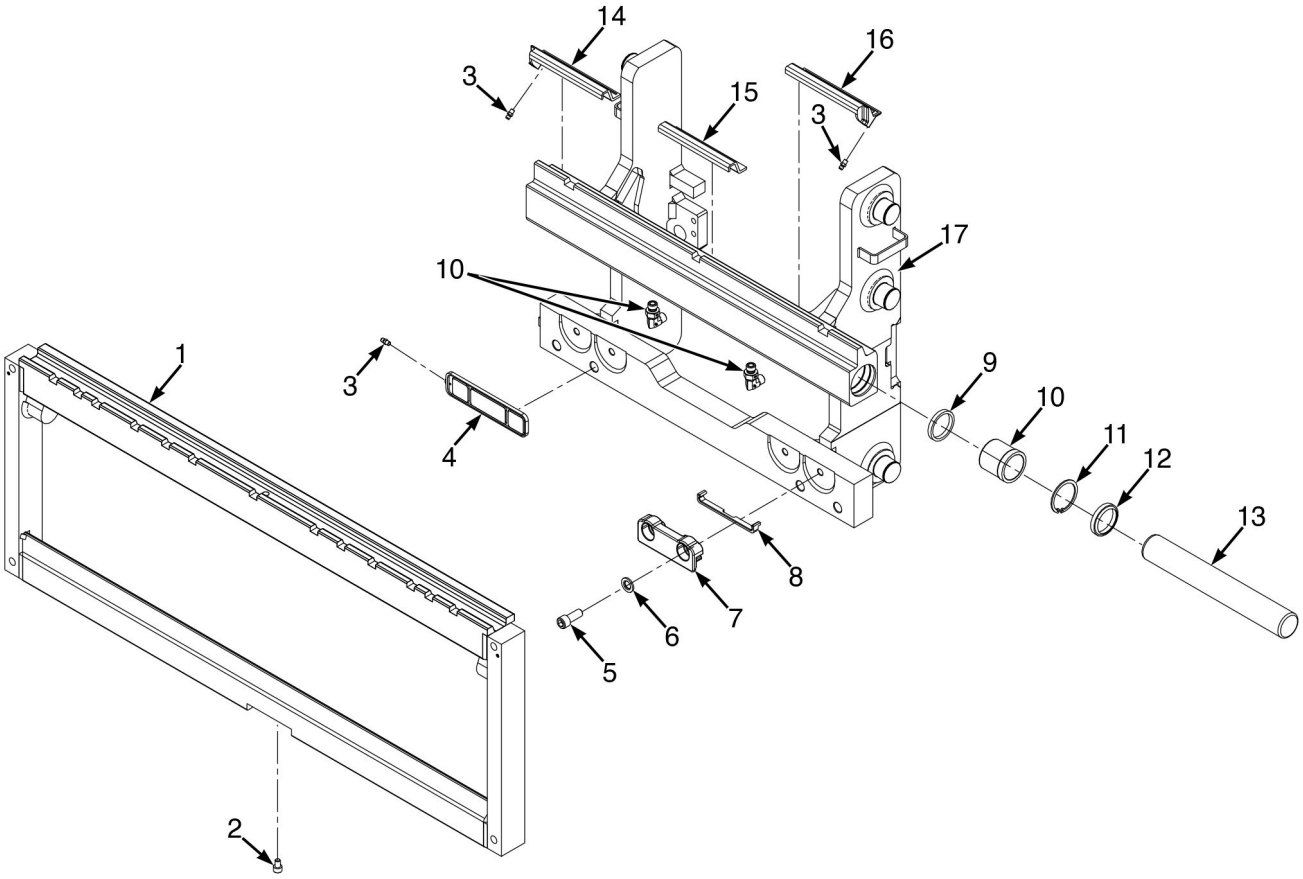

BP171340

©2026 HYSTER COMPANY

CARRIAGE ASSEMBLY

INTEGRAL SIDE-SHIFT – MANUFACTURING OPTION

ITEM	PART NO.	DESCRIPTION	QTY
	4724844	Side-Shift Carriage (Class II) (42in)	1
	4724845	Side-Shift Carriage (Class III) (42in)	1
	4724842	Side-Shift Carriage (Class III) (48in)	1
1	81062031	Frame (Class II) (42in)	1
1	81062045	Frame (Class III) (42in)	1
1	81062148	Frame (48in)	1
2	81058297	Screw	1
3	16041	Grease Fitting	4
4	4010156	Pad	2
5	4164432	Screw (Class II)	4
5	. . . . .	Screw (Class III)	4
6	4010153	Washer (Class II)	4
6	4188863	Washer (Class III)	4
7	4010154	Hook (Class II)	2
7	4188868	Hook (Class III)	2
8	4010155	Pad	2
9	1495880	Seal	2
10	1495898	Bushing	2
11	1495921	Snap Ring	2
12	1495901	Rod Wiper	2
13	. . . . .	Rod	2
14	1495893	Pad	1
15	2796247	Bearing	1
16	1495894	Pad	1
17	81062037	Frame (Fixed, Class II) (42in)	1
17	81062101	Frame (Fixed, Class III) (42in)	1
17	81062150	Frame (Fixed, Class III) (48in)	1
18	81058298	Fitting	2
	1593555	Kit-Seal (Side-Shift Cylinder)	1

©2026 HYSTER COMPANY

HEADER HOSE AND ATTACHING PARTS (FIGURE 17-12)

TWO STAGE LIMITED FREE-LIFT

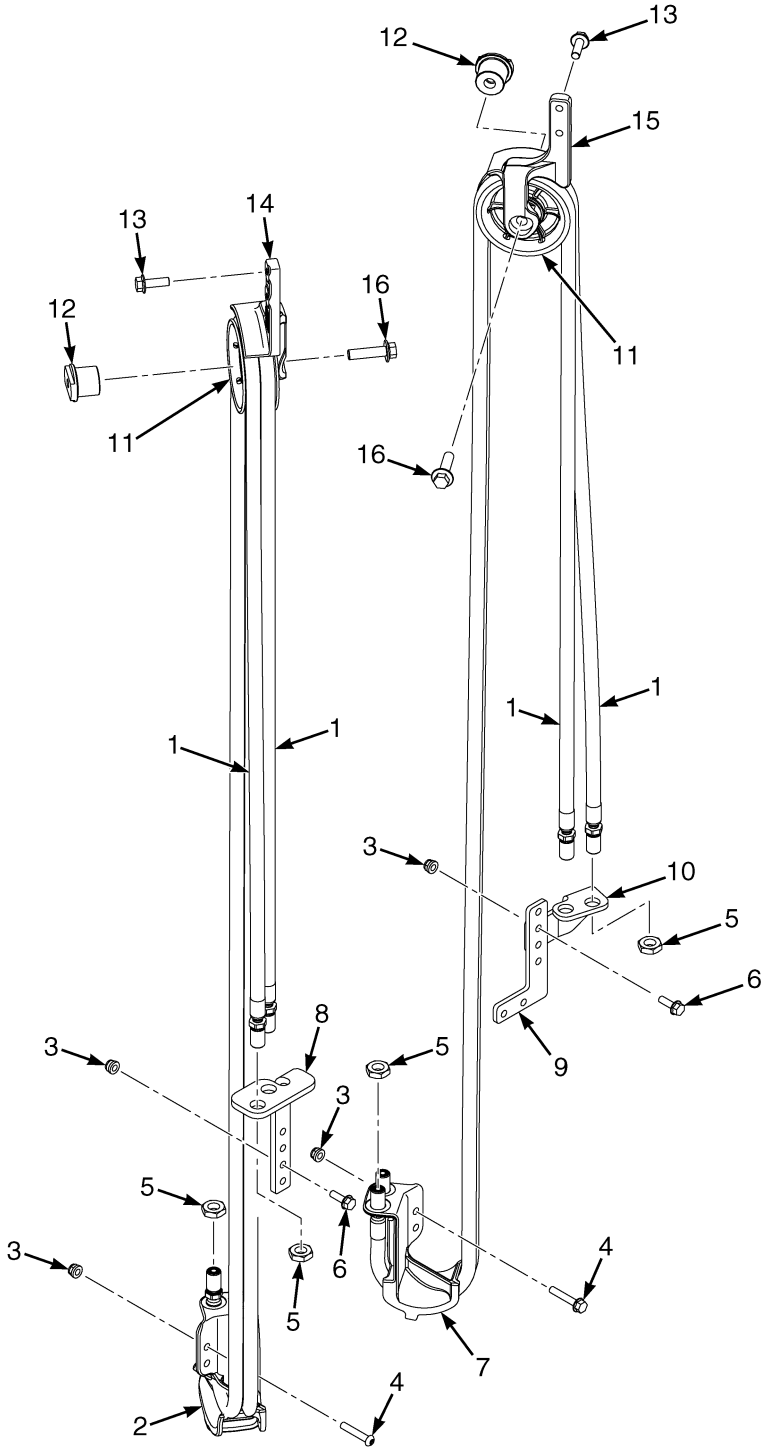

©2026 HYSTER COMPANY

HEADER HOSE AND ATTACHING PARTS

TWO STAGE LIMITED FREE-LIFT

KEY:
A: 3rd Function Position
B: 4th Function Position

ITEM	PART NO.	DESCRIPTION	QTY A	QTY B
1	4684253	Header Hose (Lift Height 3220mm)	2	2
1	4684262	Header Hose (Lift Height 4160mm)	2	2
1	4684263	Header Hose (Lift Height 4260mm)	2	2
1	4684265	Header Hose (Lift Height 4460mm)	2	2
1	4684250	Header Hose (Lift Height 2228-2920mm)	2	2
1	4684251	Header Hose (Lift Height 3020/2828mm)	2	2
1	4684252	Header Hose (Lift Height 3120/2928mm)	2	2
1	4684254	Header Hose (Lift Height 3320/3128mm)	2	2
1	4684255	Header Hose (Lift Height 3420/3228mm)	2	2
1	4684256	Header Hose (Lift Height 3520/3328mm)	2	2
1	4684257	Header Hose (Lift Height 3620/3428mm)	2	2
1	4684258	Header Hose (Lift Height 3720/3528mm)	2	2
1	4684259	Header Hose (Lift Height 3860/3628mm)	2	2
1	4684261	Header Hose (Lift Height 4060/3828mm)	2	2
1	4684264	Header Hose (Lift Height 4360/4128mm)	2	2
1	4684267	Header Hose (Lift Height 4660/4428mm)	2	2
1	4684268	Header Hose (Lift Height 4760/4528mm)	2	2
1	4684269	Header Hose (Lift Height 4860/4628mm)	2	4
1	4684270	Header Hose (Lift Height 4960/4728mm)	2	2
1	4684275	Header Hose (Lift Height 5460/5228mm)	2	2
1	4684277	Header Hose (Lift Height 5660/5428mm)	2	2
1	4684281	Header Hose (Lift Height 6060/5828mm)	2	2
2	4242773	Bracket	1	..
3	4187690	Locknut	4	6
4	4295980	Screw	2	2
5	4187786	Nut	4	4
6	4185429	Capscrew	2	4
7	4242775	Bracket	..	1
8	4256970	Bracket	1	..
9	4256971	Bracket	..	1
10	4272095	Bracket	..	1
11	**a** 4177916	Hose Sheave	1	1
11	**b** 4360357	Hose Sheave	1	1
12	**a** 4013267	Stubshaft	1	1
12	**b** 4360355	Stubshaft	1	1
13	4185434	Capscrew	2	2
14	4250570	Bracket	1	..
15	4251161	Bracket	..	1
16	4260495	Capscrew	1	1

FOOTNOTES:

a → 3/2023

b 3/2023 →

MAST ELECTRICAL (FIGURE 17-13)

WIRE TAKE-UP

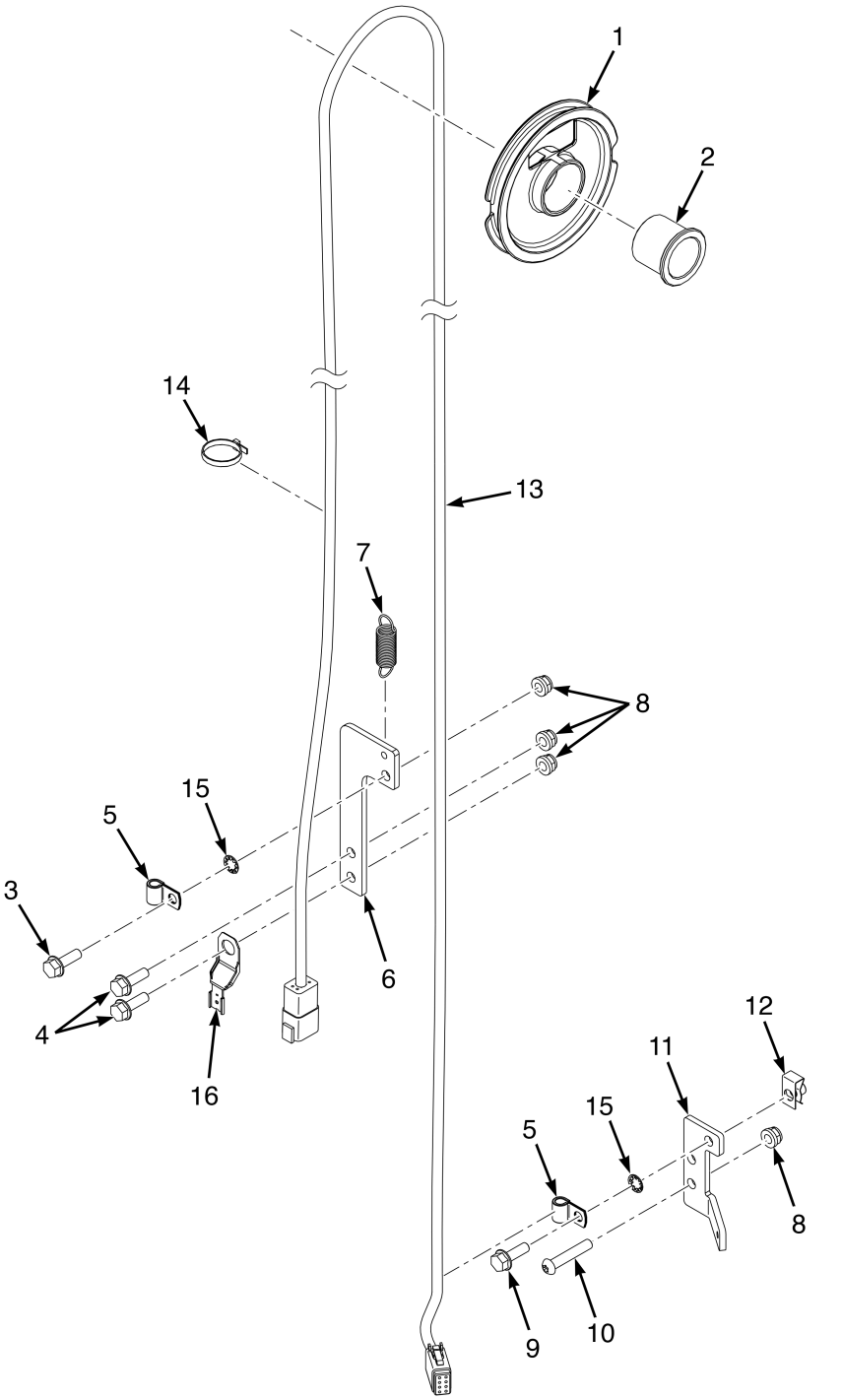

©2026 HYSTER COMPANY

MAST ELECTRICAL
WIRE TAKE-UP

KEY:
A: 2.0-2.5T
B: 3.0-3.5T

ITEM	PART NO.	DESCRIPTION	QTY A	QTY B
1	4314974	Sheave	1	1
2	4314555	Bushing	1	1
3	4185429	Capscrew	1	1
4	**a** 4185429	Capscrew	2	2
5	2304805	Hose Clamp	2	2
6	**a** 4270375	Bracket - Power to Carriage Termination	1	1
7	4692425	Spring	1	1
8	4187690	Locknut (w/ 3F Header Hose)	1	1
8	**a** 4187690	Locknut	5	5
9	4188211	Capscrew	1	1
10	4295980	Screw	2	2
11	4261795	Bracket - 2LFL Cable Termination	1	1
12	1398062	Nut (Fold Over)	1	1
13	4690615	Cable Assy - Power to Carriage (Lift Height 2920mm)	1	..
13	4690615	Cable Assy - Power to Carriage (Lift Height 2728mm)	..	1
13	4690618	Cable Assy - Power to Carriage (Lift Height 3120mm)	1	..
13	4690618	Cable Assy - Power to Carriage (Lift Height 2928mm)	..	1
13	4690619	Cable Assy - Power to Carriage (Lift Height 3220mm)	1	..
13	4690619	Cable Assy - Power to Carriage (Lift Height 3028mm)	..	1
13	4690620	Cable Assy - Power to Carriage (Lift Height 3320mm)	1	..
13	4690620	Cable Assy - Power to Carriage (Lift Height 3128mm)	..	1
13	4690621	Cable Assy - Power to Carriage (Lift Height 3420mm)	1	..
13	4690621	Cable Assy - Power to Carriage (Lift Height 3228mm)	..	1
13	4690622	Cable Assy - Power to Carriage (Lift Height 3520mm)	1	..
13	4690622	Cable Assy - Power to Carriage (Lift Height 3328mm)	..	1
13	4690623	Cable Assy - Power to Carriage (Lift Height 3620mm)	1	..
13	4690623	Cable Assy - Power to Carriage (Lift Height 3428mm)	..	1
13	4690624	Cable Assy - Power to Carriage (Lift Height 3720mm)	1	..
13	4690624	Cable Assy - Power to Carriage (Lift Height 3528mm)	..	1
13	4690625	Cable Assy - Power to Carriage (Lift Height 3860mm)	1	..
13	4690625	Cable Assy - Power to Carriage (Lift Height 3628mm)	..	1
13	4690627	Cable Assy - Power to Carriage (Lift Height 4060mm)	1	..
13	4690627	Cable Assy - Power to Carriage (Lift Height 3828mm)	..	1
13	4690628	Cable Assy - Power to Carriage (Lift Height 4160mm)	1	..
13	4690628	Cable Assy - Power to Carriage (Lift Height 3928mm)	..	1
13	4690629	Cable Assy - Power to Carriage (Lift Height 4260mm)	1	..
13	4690629	Cable Assy - Power to Carriage (Lift Height 4028mm)	..	1
13	4690630	Cable Assy - Power to Carriage (Lift Height 4360mm)	1	..
13	4690630	Cable Assy - Power to Carriage (Lift Height 4128mm)	..	1
13	4690631	Cable Assy - Power to Carriage (Lift Height 4460mm)	1	..
13	4690631	Cable Assy - Power to Carriage (Lift Height 4228mm)	..	1
13	4690633	Cable Assy - Power to Carriage (Lift Height 4660mm)	1	..
13	4690633	Cable Assy - Power to Carriage (Lift Height 4428mm)	..	1
13	4690634	Cable Assy - Power to Carriage (Lift Height 4760mm)	1	..
13	4690634	Cable Assy - Power to Carriage (Lift Height 4528mm)	..	1

©2026 HYSTER COMPANY

MAST ELECTRICAL
WIRE TAKE-UP

KEY:
A: 2.0-2.5T
B: 3.0-3.5T

ITEM	PART NO.	DESCRIPTION	QTY A	QTY B
13	4690636	Cable Assy - Power to Carriage (Lift Height 4960mm)	1	..
13	4690636	Cable Assy - Power to Carriage (Lift Height 4728mm)	..	1
13	4690641	Cable Assy - Power to Carriage (Lift Height 5460mm)	1	..
13	4690641	Cable Assy - Power to Carriage (Lift Height 5228mm)	..	1
13	4690643	Cable Assy - Power to Carriage (Lift Height 5660mm)	1	..
13	4690643	Cable Assy - Power to Carriage (Lift Height 5428mm)	..	1
13	4690647	Cable Assy - Power to Carriage (Lift Height 6060mm)	1	..
13	4690647	Cable Assy - Power to Carriage (Lift Height 5828mm)	..	1
14	137852	Strap Clamp	1	1
15	296360	Washer	2	2
16	1582442	Clip	1	1

FOOTNOTES:

a Without 3F Header Hose only.

©2026 HYSTER COMPANY

NOTES

MAST ASSEMBLY (FIGURE 17-14)
TWO STAGE LIMITED FREE-LIFT — A2M1

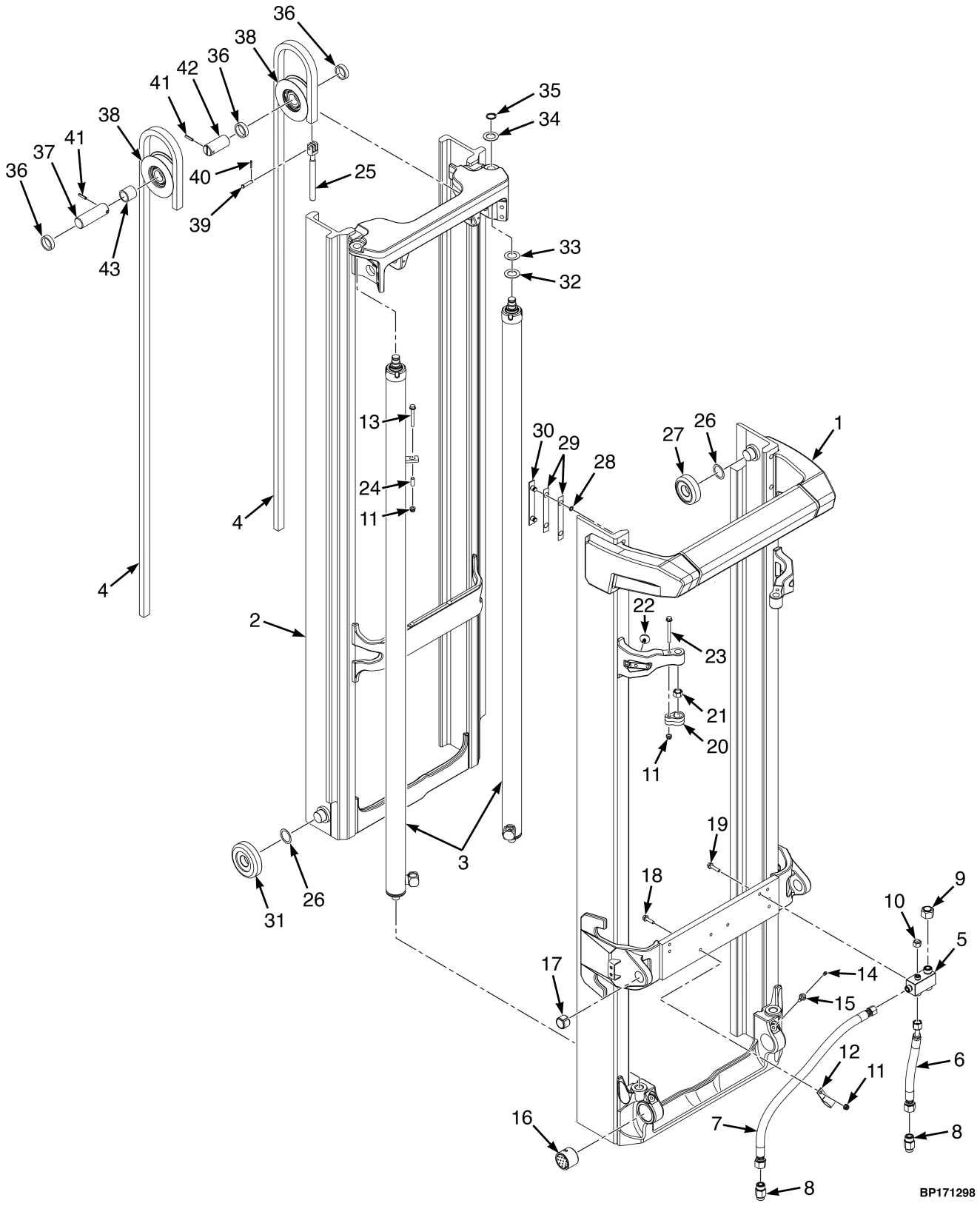

©2026 HYSTER COMPANY

MAST ASSEMBLY
TWO STAGE LIMITED FREE-LIFT – A2M1

ITEM	PART NO.	DESCRIPTION	QTY
	4718292	Mast Assy (Lift Height 2920mm/115in)	1
	4718295	Mast Assy (Lift Height 3220mm/126.8in)	1
	4718298	Mast Assy (Lift Height 3520mm/138.6in)	1
	4718301	Mast Assy (Lift Height 3860mm/152in)	1
	4718304	Mast Assy (Lift Height 4160mm/163.8in)	1
	4718307	Mast Assy (Lift Height 4460mm/175.6in)	1
	4718310	Mast Assy (Lift Height 4760mm/187.4in)	1
	4718312	Mast Assy (Lift Height 4960mm/195.3in)	1
	4718317	Mast Assy (Lift Height 5460mm/215in)	1
	4718323	Mast Assy (Lift Height 6060mm/238.6in)	1
1	4224651	Outer Mast (Lift Height 2920mm/115in)	1
1	4224654	Outer Mast (Lift Height 3220mm/126.8in)	1
1	4224657	Outer Mast (Lift Height 3520mm/138.6in)	1
1	4224662	Outer Mast (Lift Height 3860mm/152in)	1
1	4224665	Outer Mast (Lift Height 4160mm/163.8in)	1
1	4224668	Outer Mast (Lift Height 4460mm/175.6in)	1
1	4224671	Outer Mast (Lift Height 4760mm/187.4in)	1
1	4224675	Outer Mast (Lift Height 4960mm/195.3in)	1
1	4224680	Outer Mast (Lift Height 5460mm/215in)	1
1	4224688	Outer Mast (Lift Height 6060mm/238.6in)	1
1	4231443	Stubshaft	2
2	4361754	Inner Mast (Lift Height 2920mm/115in)	1
2	4361757	Inner Mast (Lift Height 3220mm/126.8in)	1
2	4361760	Inner Mast (Lift Height 3520mm/138.6in)	1
2	4361763	Inner Mast (Lift Height 3860mm/152in)	1
2	4361766	Inner Mast (Lift Height 4160mm/163.8in)	1
2	4361769	Inner Mast (Lift Height 4460mm/175.6in)	1
2	4361772	Inner Mast (Lift Height 4760mm/187.4in)	1
2	4361774	Inner Mast (Lift Height 4960mm/195.3in)	1
2	4361779	Inner Mast (Lift Height 5460mm/215in)	1
2	4361785	Inner Mast (Lift Height 6060mm/238.6in)	1
2	4231443	Stubshaft	2
3	. . . . .	Main Lift Cylinder (☞Figure 17-15)	2
4	4337028	Leaf Chain - Fixed Length (Lift Height 2920mm/115in)	2
4	4337032	Leaf Chain - Fixed Length (Lift Height 3220mm/126.8in)	2
4	4337036	Leaf Chain - Fixed Length (Lift Height 3520mm/138.6in)	2
4	4337042	Leaf Chain - Fixed Length (Lift Height 3860mm/152in)	2
4	4337046	Leaf Chain - Fixed Length (Lift Height 4160mm/163.8in)	2
4	4337050	Leaf Chain - Fixed Length (Lift Height 4460mm/175.6in)	2
4	4337054	Leaf Chain - Fixed Length (Lift Height 4760mm/187.4in)	2
4	4337059	Leaf Chain - Fixed Length (Lift Height 4960mm/195.3in)	2
4	4337066	Leaf Chain - Fixed Length (Lift Height 5460mm/215in)	2
4	4337076	Leaf Chain - Fixed Length (Lift Height 6060mm/238.6in)	2
5	4245292	Manifold - Mast Connection Block	1
6	4700254	Hose Assy	1
7	4700253	Hose Assy	1
8	4700616	Hyd Velocity Fuse	2
9	1529017	Fitting (Blind Plug/Cap)	1
10	1529015	Cap	1
11	4187690	Locknut	3

MAST ASSEMBLY

TWO STAGE LIMITED FREE-LIFT – A2M1

ITEM	PART NO.	DESCRIPTION	QTY
12	1310611	Clamp	1
13	4189066	Capscrew	2
14	4269502	Capscrew (Lube)	2
15	16010	Grease Fitting	1
16	4033414	Bushing	2
17	300982	Bushing	2
18	4185430	Capscrew	1
19	4185431	Capscrew	2
20	4145952	Restraint	2
21	4029443	Nut , Castle	2
22	4275100	Rubber Pad	2
23	4185433	Capscrew	2
24	~~4309896~~		
	4369706	Spacer	2
25	4335944	Chain Anchor	2
26	129387	Shim (0.020 in.)	12
27	4249502	Load Roller	2
27	4249501	Load Roller (Optional)	2
28	104506	O-Ring	4
29	4253176	Shim	2
29	4253175	Shim	2
30	4253173	Wear Strip	2
31	4249506	Load Roller	2
31	4249505	Load Roller (Optional)	2
32	1333382	Washer (Mast Shim) (0.060 in.)	4
33	4242897	Shim	2
33	4242898	Shim (Optional)	2
34	2306942	Shim	2
35	248212	Snap Ring	2
36	4356095	Spacer	3
37	4360354	Pin (LH)	1
38	4286492	Chain Sheave	2
39	4242899	Pin	2
40	15222	Cotter Pin	2
41	302465	Roll Pin	2
42	4360625	Pin (RH)	1
43	4244114	Spacer	1

See Service Manual for service procedures.
©2026 HYSTER COMPANY

MAIN LIFT CYLINDER ASSEMBLY (FIGURE 17-15)

TWO STAGE LIMITED FREE-LIFT — A2M1

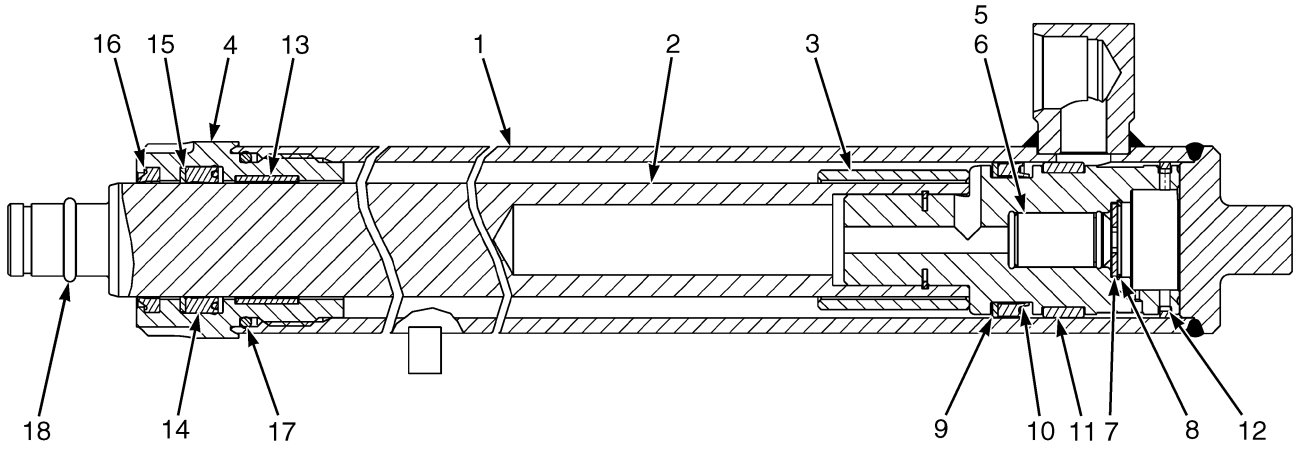

BP170987

ITEM	PART NO.	DESCRIPTION	QTY
	4680802	Lift Cylinder (Lift Height 2920mm/115in)	2
	4680805	Lift Cylinder (Lift Height 3220mm/126.8in)	2
	4680808	Lift Cylinder (Lift Height 3520mm/138.6in)	2
	4680818	Lift Cylinder (Lift Height 3860mm/152in)	2
	4680832	Lift Cylinder (Lift Height 4160mm/163.8in)	2
	4680832	Lift Cylinder (Lift Height 4460mm/175.6in)	2
	4681065	Lift Cylinder (Lift Height 4760mm/187.4in)	2
	4681067	Lift Cylinder (Lift Height 4960mm/195.3in)	2
	4681072	Lift Cylinder (Lift Height 5460mm/215in)	2
	4681078	Lift Cylinder (Lift Height 6060mm/238.6in)	2
1	4250692	Tube Wldmt-Cylinder (Lift Height 2920mm/115in)	1
1	4250695	Tube Wldmt-Cylinder (Lift Height 3220mm/126.8in)	1
1	4250698	Tube Wldmt-Cylinder (Lift Height 3520mm/138.6in)	1
1	4250701	Tube Wldmt-Cylinder (Lift Height 3860mm/152in)	1
1	4250704	Tube Wldmt-Cylinder (Lift Height 4160mm/163.8in)	1
1	4250707	Tube Wldmt-Cylinder (Lift Height 4460mm/175.6in)	1
1	4250758	Tube Wldmt-Cylinder (Lift Height 4760mm/187.4in)	1
1	4250764	Tube Wldmt-Cylinder (Lift Height 4960mm/195.3in)	1
1	4250769	Tube Wldmt-Cylinder (Lift Height 5460mm/215in)	1
1	4250775	Tube Wldmt-Cylinder (Lift Height 6060mm/238.6in)	1
2	4246572	Rod Assy (Lift Height 2920mm/115in)	1
2	4246575	Rod Assy (Lift Height 3220mm/126.8in)	1
2	4246578	Rod Assy (Lift Height 3520mm/138.6in)	1
2	4246581	Rod Assy (Lift Height 3860mm/152in)	1
2	4246587	Rod Assy (Lift Height 4160mm/163.8in)	1
2	4246587	Rod Assy (Lift Height 4460mm/175.6in)	1

ITEM	PART NO.	DESCRIPTION	QTY
2	4246667	Rod Assy (Lift Height 4760mm/187.4in)	1
2	4246669	Rod Assy (Lift Height 4960mm/195.3in)	1
2	4246674	Rod Assy (Lift Height 5460mm/215in)	1
2	4246680	Rod Assy (Lift Height 6060mm/238.6in)	1
3	2045872	Spacer (Lift Height 3860mm/152in - Lift Height 4460mm/175.6in)	1
3	4681150	Spacer (Lift Height 4760mm/187.4in)	1
3	4681151	Spacer (Lift Height 4960mm/195.3in and Lift Height 5460mm/215in)	1
3	4724060	Spacer (Lift Height 6060mm/238.6in)	1
4	4615847	Gland	1
5	257913	Check Valve	1
6	190580	O-Ring	1
7	297531	Washer	1
7	637635	Washer (Optional)	1
8	187388	Snap Ring	1
9	638246	Back-Up Ring (Lift Height 2920mm/115in - Lift Height 4460mm/175.6in)	1
9	335012	Back-Up Ring (Lift Height 4760mm/187.4in - Lift Height 6060mm/238.6in)	1
10	1381064	Piston Seal (Lift Height 2920mm/115in - Lift Height 4460mm/175.6in)	1
10	1381063	Piston Seal (Lift Height 4760mm/187.4in - Lift Height 6060mm/238.6in)	1
11	1356750	Wear Ring	1
12	1360127	Piston Ring	1
13	322902	Wear Ring (Lift Height 2920mm/115in - Lift Height 4460mm/175.6in)	1
13	1380570	Wear Ring (Lift Height 4760mm/187.4in - Lift Height 6060mm/238.6in)	1
14	1356749	Rod Seal (Lift Height 2920mm/115in - Lift Height 4460mm/175.6in)	1
14	1356752	Rod Seal (Lift Height 4760mm/187.4in - Lift Height 6060mm/238.6in)	1
15	322824	Back-Up Ring (Lift Height 2920mm/115in - Lift Height 4460mm/175.6in)	1
16	1383063	Rod Wiper (Lift Height 2920mm/115in - Lift Height 4460mm/175.6in)	1
16	1383064	Rod Wiper (Lift Height 4760mm/187.4in - Lift Height 6060mm/238.6in)	1
17	~~4028986~~		
	92861	O-Ring (Lift Height 2920mm/115in - Lift Height 4460mm/175.6in)	1
17	59229	O-Ring (Lift Height 4760mm/187.4in - Lift Height 6060mm/238.6in)	1
18	60836	O-Ring	1
	4623973	Kit-Seal (Lift Height 2920mm/115in - Lift Height 4460mm/175.6in)	1
	4625475	Kit-Seal (Lift Height 4760mm/187.4in - Lift Height 6060mm/238.6in)	1
	1360128	Sleeve	1
	1360129	Sleeve	1

See Service Manual for service procedures.
©2026 HYSTER COMPANY

NOTES

MAST ASSEMBLY (FIGURE 17-16)
TWO STAGE LIMITED FREE-LIFT — A2M2

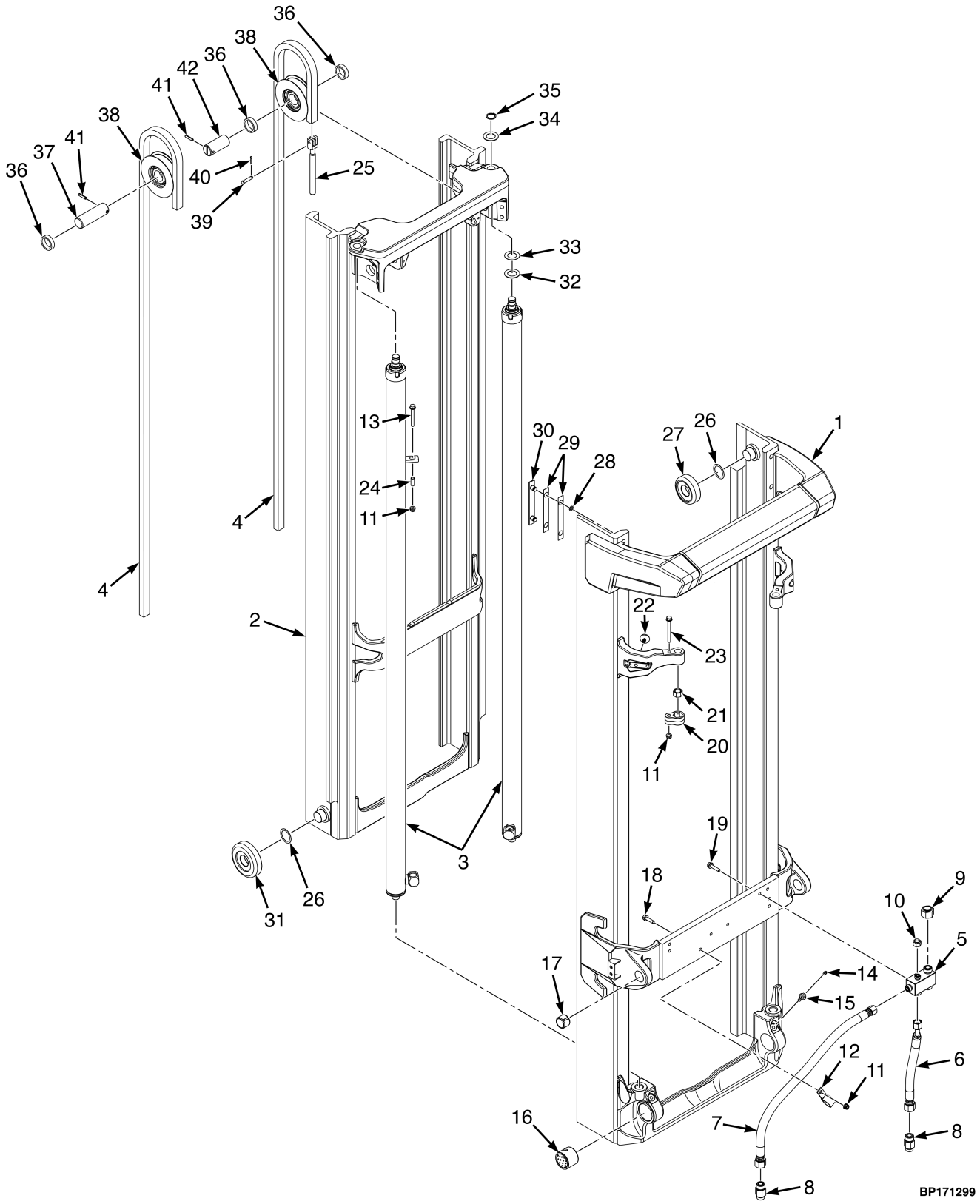

©2026 HYSTER COMPANY

MAST ASSEMBLY
TWO STAGE LIMITED FREE-LIFT – A2M2

ITEM	PART NO.	DESCRIPTION	QTY
	4718331	Mast Assy (Lift Height 2928mm/115.3in)	1
	4718334	Mast Assy (Lift Height 3228mm/127.1in)	1
	4718335	Mast Assy (Lift Height 3328mm/131in)	1
	4718337	Mast Assy (Lift Height 3528mm/138.9in)	1
	4718340	Mast Assy (Lift Height 3828mm/150.7in)	1
	4718343	Mast Assy (Lift Height 4128mm/162.5in)	1
	4718346	Mast Assy (Lift Height 4428mm/174.3in)	1
	4718349	Mast Assy (Lift Height 4728mm/186.1in)	1
	4718356	Mast Assy (Lift Height 5428mm/213.7in)	1
	4718360	Mast Assy (Lift Height 5828mm/229.4in)	1
1	4224653	Outer Mast (Lift Height 2928mm/115.3in)	1
1	4224656	Outer Mast (Lift Height 3228mm/127.1in)	1
1	4224657	Outer Mast (Lift Height 3328mm/131in)	1
1	4224659	Outer Mast (Lift Height 3528mm/138.9in)	1
1	4224664	Outer Mast (Lift Height 3828mm/150.7in)	1
1	4224667	Outer Mast (Lift Height 4128mm/162.5in)	1
1	4224670	Outer Mast (Lift Height 4428mm/174.3in)	1
1	4224675	Outer Mast (Lift Height 4728mm/186.1in)	1
1	4224682	Outer Mast (Lift Height 5428mm/213.7in)	1
1	4224668	Outer Mast (Lift Height 5828mm/229.4in)	1
1	4231443	Stubshaft	2
2	4361756	Inner Mast (Lift Height 2928mm/115.3in)	1
2	4361759	Inner Mast (Lift Height 3228mm/127.1in)	1
2	4361760	Inner Mast (Lift Height 3328mm/131in)	1
2	4361762	Inner Mast (Lift Height 3528mm/138.9in)	1
2	4361765	Inner Mast (Lift Height 3828mm/150.7in)	1
2	4361768	Inner Mast (Lift Height 4128mm/162.5in)	1
2	4361771	Inner Mast (Lift Height 4428mm/174.3in)	1
2	4361774	Inner Mast (Lift Height 4728mm/186.1in)	1
2	4361781	Inner Mast (Lift Height 5428mm/213.7in)	1
2	4361785	Inner Mast (Lift Height 5828mm/229.4in)	1
2	4231443	Stubshaft	2
3	. . . . .	Main Lift Cylinder (☞Figure 17-17)	2
4	4337130	Leaf Chain - Fixed Length (Lift Height 2928mm/115.3in)	2
4	4337134	Leaf Chain - Fixed Length (Lift Height 3228mm/127.1in)	2
4	4337136	Leaf Chain - Fixed Length (Lift Height 3328mm/131in)	2
4	4337138	Leaf Chain - Fixed Length (Lift Height 3528mm/138.9in)	2
4	4337145	Leaf Chain - Fixed Length (Lift Height 3828mm/150.7in)	2
4	4337149	Leaf Chain - Fixed Length (Lift Height 4128mm/162.5in)	2
4	4337153	Leaf Chain - Fixed Length (Lift Height 4428mm/174.3in)	2
4	4337159	Leaf Chain - Fixed Length (Lift Height 4728mm/186.1in)	2
4	4337169	Leaf Chain - Fixed Length (Lift Height 5428mm/213.7in)	2
4	4337176	Leaf Chain - Fixed Length (Lift Height 5828mm/229.4in)	2
5	4245292	Manifold - Mast Connection Block	1
6	4700254	Hose Assy	1
7	4700253	Hose Assy	1
8	4700616	Hyd Velocity Fuse	2
9	1529017	Fitting (Blind Plug/Cap)	1
10	1529015	Cap	1
11	4187690	Locknut	3

MAST ASSEMBLY

TWO STAGE LIMITED FREE-LIFT – A2M2

ITEM	PART NO.	DESCRIPTION	QTY
12	1310611	Clamp	1
13	4189066	Capscrew	2
14	4269502	Capscrew (Lube)	2
15	16010	Grease Fitting	2
16	4033414	Bushing	2
17	300982	Bushing	2
18	4185430	Capscrew	1
19	4185431	Capscrew	2
20	4145952	Restraint	2
21	4029443	Nut , Castle	2
22	4176370	Rubber Pad	2
23	4185433	Capscrew	2
24	~~4309896~~		
	4369706	Spacer	2
25	~~4329736~~		
	4397079	Chain Anchor	2
26	129387	Shim (0.020 in.)	12
26	4263698	Shim (0.762 in.) (Optional)	AR
27	4249502	Load Roller	2
27	4249501	Load Roller (Optional)	2
28	104506	O-Ring	4
29	4253175	Shim	2
29	4253176	Shim (Optional)	2
30	4253173	Wear Strip	2
31	4249506	Load Roller	2
31	4249505	Load Roller (Optional)	2
32	1333382	Washer (Mast Shim) (0.060 in.)	4
33	4242897	Shim	2
33	4242898	Shim (Optional)	2
34	2306942	Shim	2
35	248212	Snap Ring	2
36	4356095	Spacer	3
37	4360354	Pin (LH)	1
38	4286493	Chain Sheave	2
39	4242899	Pin	2
40	15222	Cotter Pin	2
41	302465	Roll Pin	2
42	4360625	Pin (RH)	1

See Service Manual for service procedures.
©2026 HYSTER COMPANY

MAIN LIFT CYLINDER ASSEMBLY (FIGURE 17-17)

TWO STAGE LIMITED FREE-LIFT — A2M2

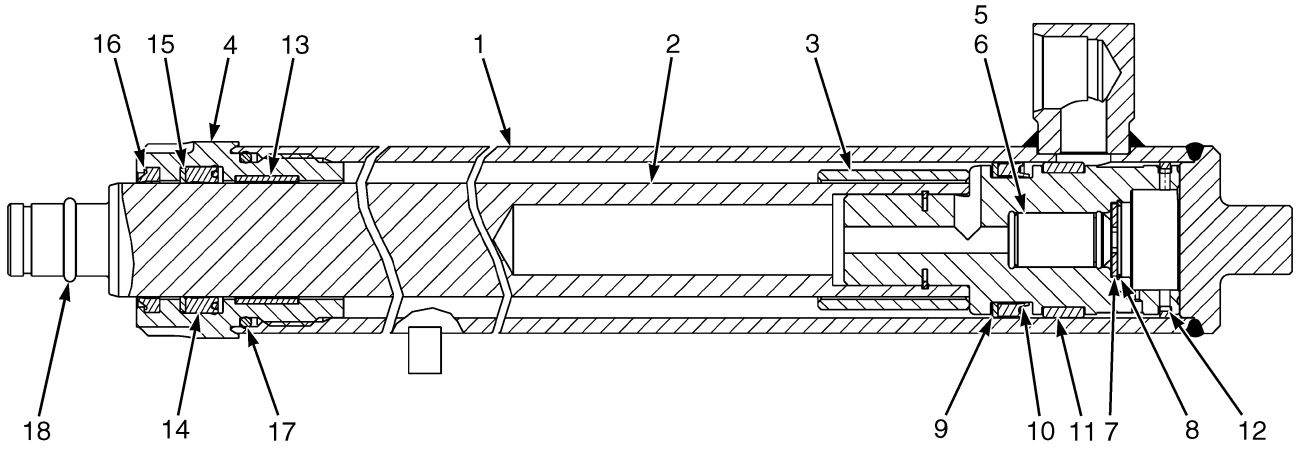

BP170987

ITEM	PART NO.	DESCRIPTION	QTY
	4680998	Lift Cylinder (Lift Height 2928mm/115.3in)	2
	4681001	Lift Cylinder (Lift Height 3228mm/127.1in)	2
	4681002	Lift Cylinder (Lift Height 3328mm/131in)	2
	4681004	Lift Cylinder (Lift Height 3528mm/138.9in)	2
	4681007	Lift Cylinder (Lift Height 3828mm/150.7in)	2
	4681038	Lift Cylinder (Lift Height 4128mm/162.5in)	2
	4681041	Lift Cylinder (Lift Height 4428mm/174.3in)	2
	4681044	Lift Cylinder (Lift Height 4728mm/186.1in)	2
	4681051	Lift Cylinder (Lift Height 5428mm/213.7in)	2
	4681055	Lift Cylinder (Lift Height 5828mm/229.4in)	2
1	4250743	Tube Wldmt-Cylinder (Lift Height 2928mm/115.3in)	1
1	4250746	Tube Wldmt-Cylinder (Lift Height 3228mm/127.1in)	1
1	4250747	Tube Wldmt-Cylinder (Lift Height 3328mm/131in)	1
1	4250749	Tube Wldmt-Cylinder (Lift Height 3528mm/138.9in)	1
1	4250752	Tube Wldmt-Cylinder (Lift Height 3828mm/150.7in)	1
1	4250755	Tube Wldmt-Cylinder (Lift Height 4128mm/162.5in)	1
1	4250762	Tube Wldmt-Cylinder (Lift Height 4428mm/174.3in)	1
1	4250764	Tube Wldmt-Cylinder (Lift Height 4728mm/186.1in)	1
1	4250771	Tube Wldmt-Cylinder (Lift Height 5428mm/213.7in)	1
1	4250775	Tube Wldmt-Cylinder (Lift Height 5828mm/229.4in)	1
2	4246633	Rod Assy (Lift Height 2928mm/115.3in)	1
2	4246636	Rod Assy (Lift Height 3228mm/127.1in)	1
2	4246637	Rod Assy (Lift Height 3328mm/131in)	1
2	4246639	Rod Assy (Lift Height 3528mm/138.9in)	1
2	4246642	Rod Assy (Lift Height 3828mm/150.7in)	1
2	4246663	Rod Assy (Lift Height 4128mm/162.5in)	1

ITEM	PART NO.	DESCRIPTION	QTY
2	4246666	Rod Assy (Lift Height 4428mm/174.3in)	1
2	4246669	Rod Assy (Lift Height 4728mm/186.1in)	1
2	4246676	Rod Assy (Lift Height 5428mm/213.7in)	1
2	4246680	Rod Assy (Lift Height 5828mm/229.4in)	1
3	1355711	Spacer (Lift Height 2928mm/115.3in - Lift Height 3528mm/138.9in)	1
3	4658086	Spacer (Lift Height 3828mm/150.7in)	1
3	2088124	Spacer (Lift Height 4128mm/162.5in and Lift Height 4428mm/174.3in)	1
3	4625544	Spacer (Lift Height 4728mm/186.1in and Lift Height 5428mm/213.7in)	1
3	1355837	Spacer (Lift Height 5828mm/229.4in)	1
4	4615848	Gland	1
5	257913	Check Valve	1
6	190580	O-Ring	1
7	297531	Washer	1
7	637635	Washer (Optional)	1
8	187388	Snap Ring	1
9	335012	Back-Up Ring	1
10	1381063	Piston Seal	1
11	1356751	Wear Ring	1
12	1356748	Piston Ring	1
13	322902	Wear Ring (Lift Height 2828-3828mm)	1
13	1380570	Wear Ring (Lift Height 4128-5828mm)	1
14	1356749	Rod Seal (Lift Height 2828-3828mm)	1
14	1356752	Rod Seal (Lift Height 4128-5828mm)	1
15	322824	Back-Up Ring	1
16	1383063	Rod Wiper (Lift Height 2828-3828mm)	1
16	1383064	Rod Wiper (Lift Height 4128-5828mm)	1
17	59229	O-Ring	1
18	60836	O-Ring	1
	4623974	Kit-Seal (Lift Height 2828-3828mm)	1
	4625475	Kit-Seal (Lift Height 4128-5828mm)	1
	1360131	Sleeve	1
	1360132	Sleeve	1

See Service Manual for service procedures.
©2026 HYSTER COMPANY

NOTES

HEADER HOSE AND ATTACHING PARTS (FIGURE 17-18)

TWO STAGE LIMITED FREE-LIFT

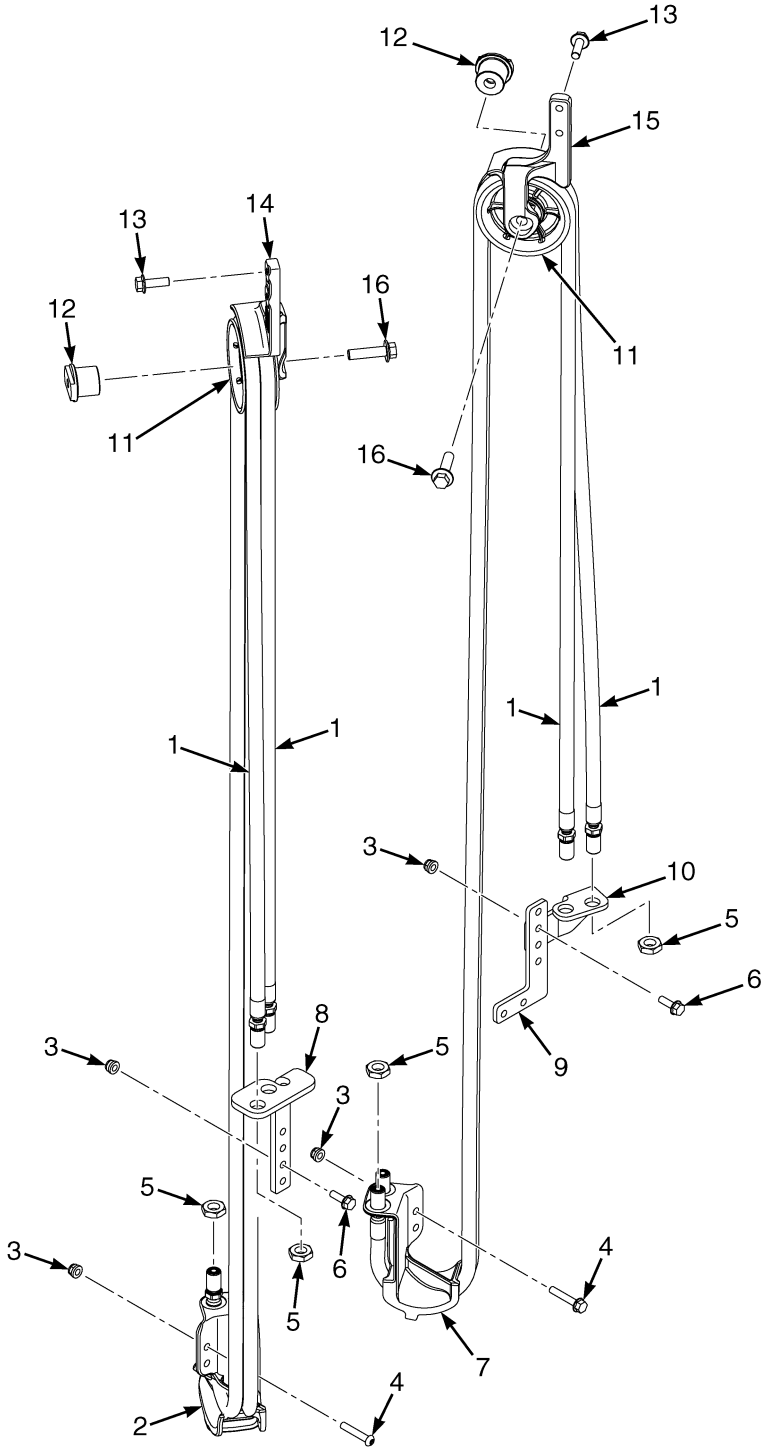

©2026 HYSTER COMPANY

HEADER HOSE AND ATTACHING PARTS

TWO STAGE LIMITED FREE-LIFT

KEY:
A: 3rd Function Position
B: 4th Function Position

ITEM	PART NO.	DESCRIPTION	QTY A	QTY B
1	4684250	Header Hose (Lift Height 2228-2920mm)	2	2
1	4684253	Header Hose (Lift Height 3220/3028mm)	2	2
1	4684256	Header Hose (Lift Height 3520/3328mm)	2	2
1	4684259	Header Hose (Lift Height 3860/3628mm)	2	2
1	4684262	Header Hose (Lift Height 4160/3928mm)	2	2
1	4684265	Header Hose (Lift Height 4460/4228mm)	2	2
1	4684267	Header Hose (Lift Height 4660/4428mm)	2	2
1	4684268	Header Hose (Lift Height 4760/4528mm)	2	2
1	4684270	Header Hose (Lift Height 4960/4728mm)	2	2
1	4684275	Header Hose (Lift Height 5460/5228mm)	2	2
1	4684281	Header Hose (Lift Height 6060/5828mm)	2	2
2	4242773	Bracket	1	..
3	4187690	Locknut	4	6
4	4295980	Screw	2	2
5	4187786	Nut	4	4
6	4185429	Capscrew	2	4
7	4242775	Bracket	..	1
8	4256970	Bracket	1	..
9	4256971	Bracket	..	1
10	4272095	Bracket	..	1
11	4360357	Hose Sheave	1	1
12	4360355	Stubshaft	1	1
13	4185434	Capscrew	2	2
14	4250570	Bracket	1	..
15	4251161	Bracket	..	1
16	4260495	Capscrew	1	1

©2026 HYSTER COMPANY

NOTES

©2026 HYSTER COMPANY

18 MAST-TWO STAGE FULL FREE-LIFT

SECTION 18
MAST-TWO STAGE FULL FREE-LIFT

DESCRIPTION	PAGE
CARRIAGE	
INTEGRAL SIDE-SHIFT - TWO STAGE FULL FREE-LIFT	18-44
STANDARD - TWO STAGE FULL FREE-LIFT	18-48
FREE LIFT TUBES	
TWO STAGE FULL FREE-LIFT (→ 8/2025)	18-65
TWO STAGE FULL FREE-LIFT (8/2025 →)	18-66
FREE-LIFT CYLINDER	
TWO STAGE FULL FREE-LIFT - F509\F564	18-39
HEADER HOSE AND ATTACHING PARTS	
TWO STAGE FULL FREE-LIFT (→ 8/2025)	18-50
TWO STAGE FULL FREE-LIFT - H50A WITH 28X9 TIRES (→ 8/2025)	18-54
TWO STAGE FULL FREE-LIFT (8/2025 →)	18-58
TWO STAGE FULL FREE-LIFT - H50A WITH 28X9 TIRES (8/2025 →)	18-62
LEFT HAND MAIN LIFT CYLINDER	
TWO STAGE FULL FREE-LIFT - F509	18-10
TWO STAGE FULL FREE-LIFT - F564	18-29
MAST ASSEMBLY	
TWO STAGE FULL FREE-LIFT - F509 (PAGE 1 OF 2)	18-2
TWO STAGE FULL FREE-LIFT - F509 (PAGE 2 OF 2)	18-6
TWO STAGE FULL FREE-LIFT - F564 (PAGE 1 OF 2)	18-22
TWO STAGE FULL FREE-LIFT - F564 (PAGE 2 OF 2)	18-26
RIGHT HAND MAIN LIFT CYLINDERS	
TWO STAGE FULL FREE-LIFT - F509 (→ PENDING PER ECN 16126609)	18-14
TWO STAGE FULL FREE-LIFT - F509 (PENDING PER ECN 16126609 →)	18-18
TWO STAGE FULL FREE-LIFT - F564 (→ PENDING PER ECN 16126609)	18-32
TWO STAGE FULL FREE-LIFT - F564 (PENDING PER ECN 16126609 →)	18-36

©2026 HYSTER COMPANY

MAST ASSEMBLY (FIGURE 18-1)
TWO STAGE FULL FREE-LIFT — F509 (PAGE 1 OF 2)

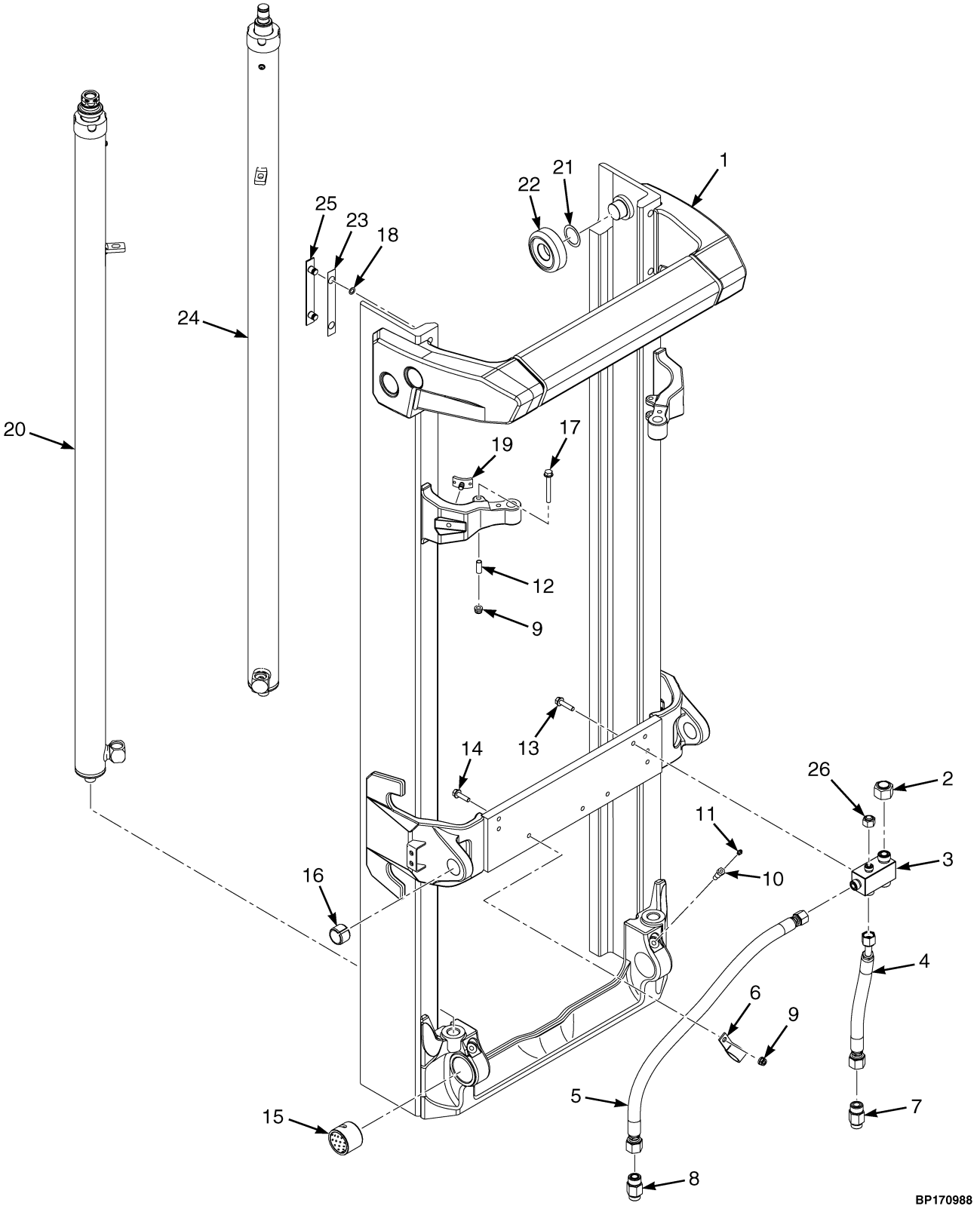

©2026 HYSTER COMPANY

MAST ASSEMBLY

TWO STAGE FULL FREE-LIFT – F509 (PAGE 1 OF 2)

F509

ITEM	DESCRIPTION 1 2 3 4	LIFT HEIGHT TO BOTTOM OF FORKS				
		2950 mm (116.1 in.)	3000 mm (118.1 in.)	3200 mm (126.0 in.)	3300 mm (129.9 in.)	3400 mm (133.9 in.)
	Mast Group Number	F509 2950	F509 3000	F509 3200	F509 3300	F509 3400
	Mast Assy	4686524	4686525	4686527	4686528	4686529
1	Outer Mast	4224651	4224651	4224653	4224654	4224655
20	Cylinder Assy	4673064	4673065	4673067	4673068	4673069

F509

ITEM	DESCRIPTION 1 2 3 4	LIFT HEIGHT TO BOTTOM OF FORKS			
		3500 mm (137.8 in.)	3600 mm (141.7 in.)	3700 mm (145.7 in.)	3800 mm (149.6 in.)
	Mast Group Number	F509 3500	F509 3600	F509 3700	F509 3800
	Mast Assy	4686530	4686531	4686532	4686533
1	Outer Mast	4224656	4224657	4224658	4224659
20	Cylinder Assy	4673070	4673071	4673072	4673073

F509

ITEM	DESCRIPTION 1 2 3 4	LIFT HEIGHT TO BOTTOM OF FORKS			
		4020 mm (158.3 in.)	4520 mm (178.0 in.)	4920 mm (193.7 in.)	5520 mm (217.3 in.)
	Mast Group Number	F509 4020	F509 4520	F509 4920	F509 5520
	Mast Assy	4686534	4686539	4686543	4686548
1	Outer Mast	4224662	4224667	4224671	4224678
20	Cylinder Assy	4673074	4673079	4673083	4673088

ITEM	PART NO.	DESCRIPTION	QTY
	a	Mast Assy	1
1	**a**	Outer Mast	1
1	4231443	Stubshaft	2
2	1529017	Fitting (Blind Plug/Cap)	1
3	4245292	Manifold - Mast Connection Block	1
4	4700254	Hose Assy	1
5	4700253	Hose Assy	1
6	1310611	Clamp	1
7	4702780	Hyd Velocity Fuse	1
8	1486749	Fitting	1
9	4187690	Locknut	6
10	4033412	Capscrew , Lubed	2

©2026 HYSTER COMPANY

MAST ASSEMBLY

TWO STAGE FULL FREE-LIFT – F509 (PAGE 1 OF 2)

ITEM	PART NO.	DESCRIPTION	QTY
11	16010	Grease Fitting	1
12	~~4309896~~		
	4369706	Spacer	2
12	~~4309896~~		
	4369706	Spacer (Alternate Part)	2
13	4185431	Capscrew	2
14	4185430	Capscrew	1
15	4033414	Bushing	2
16	300982	Bushing	2
17	4189066	Capscrew	4
18	104506	O-Ring	4
19	4176370	Rubber Pad	2
20	**a**	Cylinder Assy	1
21	129387	Shim (0.020 in.)	8
21	4263698	Shim (0.762 in.) (Optional)	12
22	4249502	Load Roller	2
22	4249501	Load Roller (Optional)	2
23	4253176	Shim	2
23	4253175	Shim (Optional)	2
24	. . . . .	RH Main Lift Cylinder (☞Figure 18-5, ☞Figure 18-4)	1
25	4253173	Wear Strip	2
26	1529015	Cap (w/o Accumulator)	1

FOOTNOTES:

a Refer to Table

©2026 HYSTER COMPANY

NOTES

MAST ASSEMBLY (FIGURE 18-2)
TWO STAGE FULL FREE-LIFT — F509 (PAGE 2 OF 2)

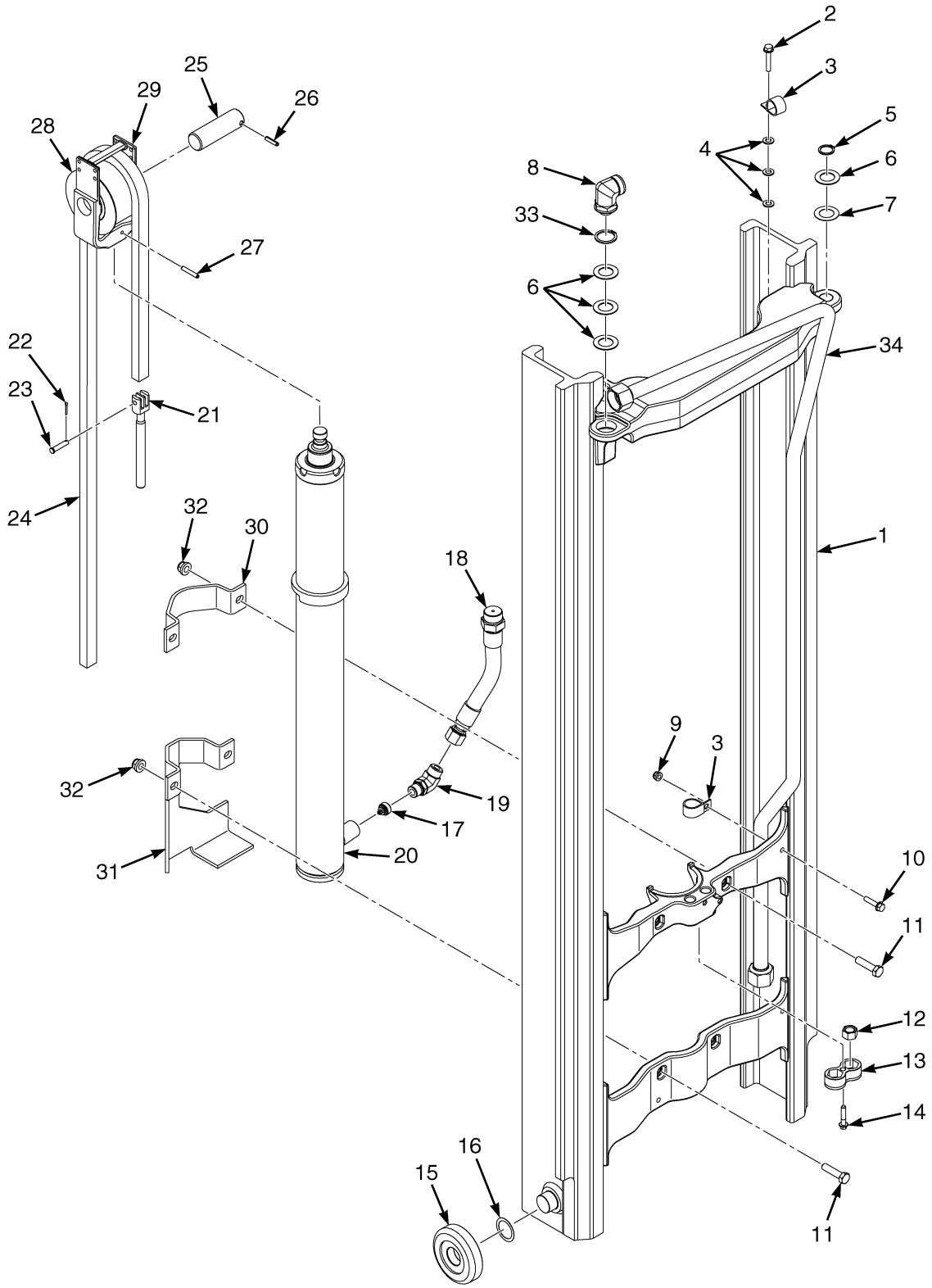

©2026 HYSTER COMPANY

MAST ASSEMBLY

TWO STAGE FULL FREE-LIFT – F509 (PAGE 2 OF 2)

F509

ITEM	DESCRIPTION 1 2 3 4	LIFT HEIGHT TO BOTTOM OF FORKS				
		2950 mm (116.1 in.)	3000 mm (118.1 in.)	3200 mm (126.0 in.)	3300 mm (129.9 in.)	3400 mm (133.9 in.)
	Mast Group Number	F509 2950	F509 3000	F509 3200	F509 3300	F509 3400
	Mast Assy	4686524	4686525	4686527	4686528	4686529
1	Intermediate Mast	4234501	4234501	4234503	4234504	4234505
18	Hose Assy	4710449	4710449	4710451	4710452	4710452
20	Cylinder Assy	4680810	4680810	4680812	4680813	4680814
24	Leaf Chain - Fixed Length	4250817	4250817	4250820	4250821	4250823
34	Tube Assy	4693519	4693519	4693519	4693519	4700632

F509

ITEM	DESCRIPTION 1 2 3 4	LIFT HEIGHT TO BOTTOM OF FORKS			
		3500 mm (137.8 in.)	3600 mm (141.7 in.)	3700 mm (145.7 in.)	3800 mm (149.6 in.)
	Mast Group Number	F509 3500	F509 3600	F509 3700	F509 3800
	Mast Assy	4686530	4686531	4686532	4686533
1	Intermediate Mast	4234506	4234507	4234508	4234509
18	Hose Assy	4710449	4710450	4710451	4710452
20	Cylinder Assy	4680815	4680817	4680819	4680820
24	Leaf Chain - Fixed Length	4250824	4250825	4250827	4250828
34	Tube Assy	4693520	4693520	4693520	4693520

MAST ASSEMBLY

TWO STAGE FULL FREE-LIFT – F509 (PAGE 2 OF 2)

F509

ITEM	DESCRIPTION 1 2 3 4	LIFT HEIGHT TO BOTTOM OF FORKS			
		4020 mm (158.3 in.)	4520 mm (178.0 in.)	4920 mm (193.7 in.)	5520 mm (217.3 in.)
	Mast Group Number	F509 4020	F509 4520	F509 4920	F509 5520
	Mast Assy	4686534	4686539	4686543	4686548
1	Intermediate Mast	4234512	4234517	4234521	4234528
18	Hose Assy	4710449	4710450	4710454	4710453
20	Cylinder Assy	4680824	4680835	4680841	4680854
24	Leaf Chain - Fixed Length	4250832	4250825	4250830	4250840
34	Tube Assy	4693521	4693522	4693522	4693518

ITEM	PART NO.	DESCRIPTION	QTY
	a	Mast Assy	1
1	**a**	Intermediate Mast	1
1	4231443	Stubshaft	2
2	4193301	Capscrew	1
3	178119	Clamp	3
3	4361913	Clamp (Alternate Part)	2
4	1581557	Washer	3
5	131358	Snap Ring	1
6	1333382	Washer (Mast Shim) (0.060 in.)	4
7	4242897	Shim	1
7	4242898	Shim (Optional)	1
8	1481090	Fitting	1
9	4187690	Locknut	3
10	4185431	Capscrew	2
11	1581827	Capscrew	4
12	4029443	Nut , Castle	2
13	4175491	Restraint - Chain Anchor nut, double	1
14	4133281	Capscrew	1
15	4249506	Load Roller	2
15	4249505	Load Roller (Optional)	2
16	129387	Shim (0.020 in.)	AR
17	4055505	Flow Valve	1
18	**a**	Hose Assy	1
19	4106301	Fitting	1
20	**a**	Cylinder Assy	1
21	4253178	Chain Anchor	2
22	~~2056815~~		
	15224	Cotter Pin	2
22	15222	Cotter Pin (Alternate Part)	2
23	4242899	Pin	2
24	**a**	Leaf Chain - Fixed Length	2
25	4172274	Pin - Hose Sheave	1

See Service Manual for service procedures.
©2026 HYSTER COMPANY

MAST ASSEMBLY

TWO STAGE FULL FREE-LIFT – F509 (PAGE 2 OF 2)

ITEM	PART NO.	DESCRIPTION	QTY
25	4341825	Pin (Alternate Part)	1
26	302465	Roll Pin	1
27	302468	Roll Pin	1
28	4223287	Chain Sheave	1
29	4249630	Crosshead	1
30	4057611	Clamp	1
31	4231398	Clamp	1
32	4187692	Locknut	4
33	304526	Snap Ring	1
34	**a**	Tube Assy	1

FOOTNOTES:

a Refer to Table

LEFT HAND MAIN LIFT CYLINDER (FIGURE 18-3)
TWO STAGE FULL FREE-LIFT — F509

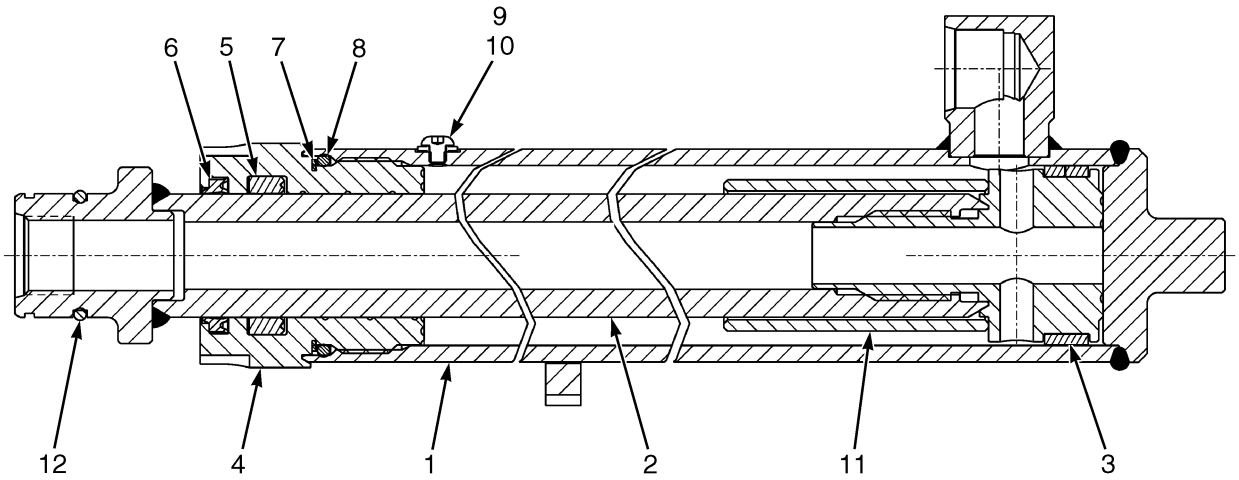

BP170990

LEFT HAND MAIN LIFT CYLINDER
TWO STAGE FULL FREE-LIFT – F509

F509

ITEM	DESCRIPTION 1 2 3 4	LIFT HEIGHT TO BOTTOM OF FORKS				
		2950 mm (116.1 in.)	3000 mm (118.1 in.)	3200 mm (126.0 in.)	3300 mm (129.9 in.)	3400 mm (133.9 in.)
	Mast Group Number	F509 2950	F509 3000	F509 3200	F509 3300	F509 3400
	Cylinder Group Number	8836715	8836716	8836718	8836719	8836720
	Cylinder Assy	4673064	4673065	4673067	4673068	4673069
1	Tube Wldmt-Cylinder	4673171	4673171	4673173	4673174	4673175
2	Cylinder Rod	4673028	4673028	4673030	4673031	4673032
11	Spacer	1355285	4176796	4176796	4176796	4176796

©2026 HYSTER COMPANY

LEFT HAND MAIN LIFT CYLINDER

TWO STAGE FULL FREE-LIFT – F509

F509

ITEM	DESCRIPTION 1 2 3 4	LIFT HEIGHT TO BOTTOM OF FORKS			
		3500 mm (137.8 in.)	**3600 mm (141.7 in.)**	**3700 mm (145.7 in.)**	**3800 mm (149.6 in.)**
	Mast Group Number	**F509 3500**	**F509 3600**	**F509 3700**	**F509 3800**
	Cylinder Group Number	**8836721**	**8836722**	**8836723**	**8836724**
	Cylinder Assy	4673070	4673071	4673072	4673073
1	Tube Wldmt-Cylinder	4673176	4673177	4673178	4673179
2	Cylinder Rod	4673033	4673034	4673035	4673036
11	Spacer	4176796	4176796	4176796	4176796

F509

ITEM	DESCRIPTION 1 2 3 4	LIFT HEIGHT TO BOTTOM OF FORKS			
		4020 mm (158.3 in.)	**4520 mm (178.0 in.)**	**4920 mm (193.7 in.)**	**5520 mm (217.3 in.)**
	Mast Group Number	**F509 4020**	**F509 4520**	**F509 4920**	**F509 5520**
	Cylinder Group Number	**8836725**	**8836730**	**8836734**	**8836739**
	Cylinder Assy	4673074	4673079	4673083	4673088
1	Tube Wldmt-Cylinder	4673180	4673185	4673189	4673194
2	Cylinder Rod	4673037	4673042	4673046	4673051
11	Spacer	4673585	4673585	4673585	4673591

ITEM	PART NO.	DESCRIPTION	QTY
	a	Cylinder Assy	1
1	**a**	Tube Wldmt-Cylinder	1
2	**a**	Cylinder Rod	1
3	1356747	Wear Ring	1
4	1355713	Gland	1
5	1381095	Rod Seal	1
6	1463104	Rod Wiper (Type "AY")	1
7	147972	Back-Up Ring	1
8	59229	O-Ring	1
9	295649	Screw (Button Head)	1
10	190887	Sealing Ring	1
11	**a**	Spacer	1
12	39152	O-Ring	1
	1496922	Kit-Seal	1

©2026 HYSTER COMPANY

FOOTNOTES:

a Refer to Table

©2026 HYSTER COMPANY

NOTES

RIGHT HAND MAIN LIFT CYLINDERS (FIGURE 18-4)

TWO STAGE FULL FREE-LIFT — F509 (→ PENDING PER ECN 16126609)

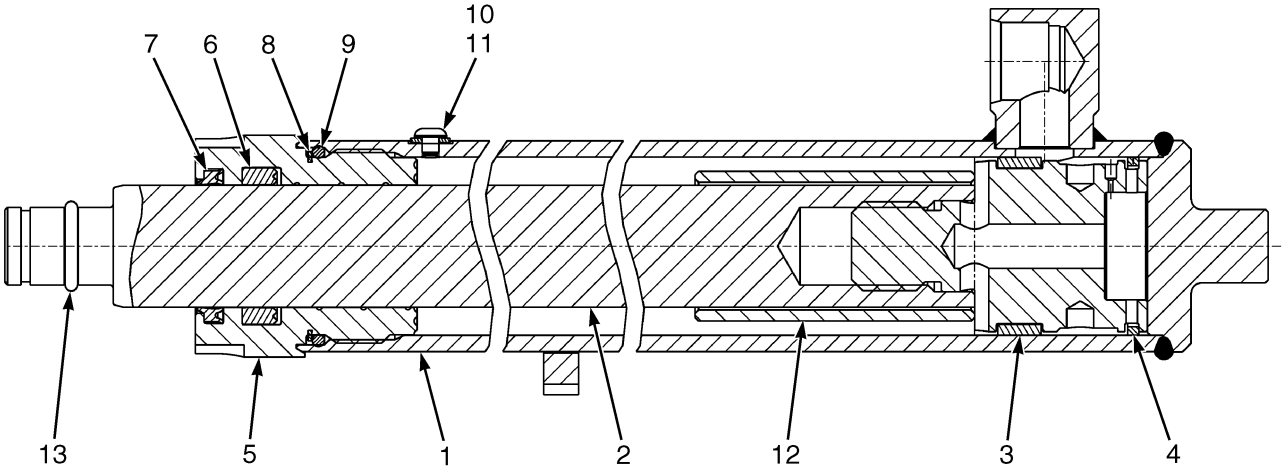

BP170991

©2026 HYSTER COMPANY

RIGHT HAND MAIN LIFT CYLINDERS

TWO STAGE FULL FREE-LIFT – F509 (→ PENDING PER ECN 16126609)

F509

ITEM	DESCRIPTION 1 2 3 4	LIFT HEIGHT TO BOTTOM OF FORKS			
		3000 mm (118.1 in.)	3200 mm (126.0 in.)	3300 mm (129.9 in.)	3400 mm (133.9 in.)
	Mast Group Number	F509 3000	F509 3200	F509 3300	F509 3400
	Cylinder Group Number	8836926	8836928	8836929	8836930
	Cylinder Assy	4673370	4673372	4673373	4673374
1	Tube Wldmt-Cylinder	4673171	4673173	4673174	4673175
2	Cylinder Rod	4673301	4673303	4673304	4673305
12	Spacer	----	----	----	----

F509

ITEM	DESCRIPTION 1 2 3 4	LIFT HEIGHT TO BOTTOM OF FORKS			
		3500 mm (137.8 in.)	3600 mm (141.7 in.)	3700 mm (145.7 in.)	3800 mm (149.6 in.)
	Mast Group Number	F509 3500	F509 3600	F509 3700	F509 3800
	Cylinder Group Number	8836931	8836932	8836933	8836934
	Cylinder Assy	4673375	4673376	4673377	4673378
1	Tube Wldmt-Cylinder	4673176	4673177	4673178	4673179
2	Cylinder Rod	4673306	4673307	4673308	4673309
12	Spacer	----	----	----	----

F509

ITEM	DESCRIPTION 1 2 3 4	LIFT HEIGHT TO BOTTOM OF FORKS			
		4020 mm (158.3 in.)	4520 mm (178.0 in.)	4920 mm (193.7 in.)	5520 mm (217.3 in.)
	Mast Group Number	F509 4020	F509 4520	F509 4920	F509 5520
	Cylinder Group Number	8836935	8836940	8836944	8836949
	Cylinder Assy	4673379	4673384	4673388	4673393
1	Tube Wldmt-Cylinder	4673180	4673185	4673189	4673194
2	Cylinder Rod	4673310	4673315	4673319	4673324
12	Spacer	2045872	2045872	2045872	4673590

©2026 HYSTER COMPANY

RIGHT HAND MAIN LIFT CYLINDERS

TWO STAGE FULL FREE-LIFT – F509 (→ PENDING PER ECN 16126609)

ITEM	PART NO.	DESCRIPTION	QTY
	a	Cylinder Assy	1
1	**a**	Tube Wldmt-Cylinder	1
2	**a**	Cylinder Rod	1
3	1356747	Wear Ring	1
4	1356748	Piston Ring	1
5	1355713	Gland	1
6	1381095	Rod Seal	1
7	1463104	Rod Wiper (Type "AY")	1
8	147972	Back-Up Ring	1
9	59229	O-Ring	1
10	295649	Screw (Button Head)	1
11	190887	Sealing Ring	1
12	**a**	Spacer	1
13	100153	O-Ring	1
13	60836	O-Ring (Alternate Part)	1
	1496922	Kit-Seal	1

FOOTNOTES:

a Refer to Table

©2026 HYSTER COMPANY

NOTES

RIGHT HAND MAIN LIFT CYLINDERS (FIGURE 18-5)

TWO STAGE FULL FREE-LIFT — F509 (PENDING PER ECN 16126609 →)

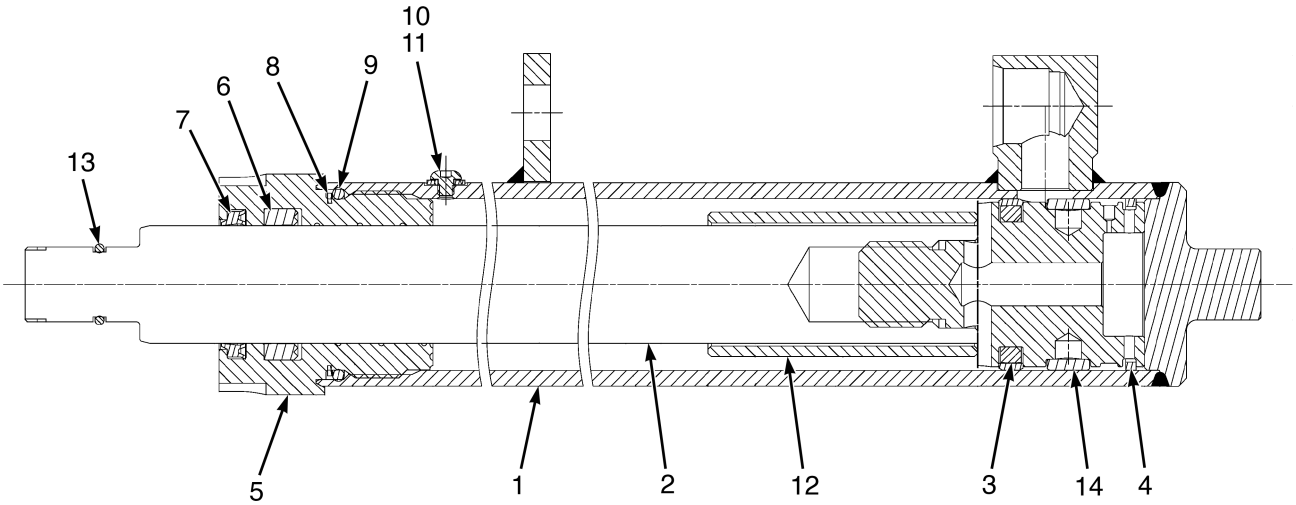

BP171277

©2026 HYSTER COMPANY

RIGHT HAND MAIN LIFT CYLINDERS

TWO STAGE FULL FREE-LIFT – F509 (PENDING PER ECN 16126609 →)

ITEM	PART NO.	DESCRIPTION	QTY
	4733288	Cylinder Assy (Lift Height 3000mm/118.1in)	1
	4733290	Cylinder Assy (Lift Height 3200mm/126in)	1
	4733291	Cylinder Assy (Lift Height 3300mm/129.9in)	1
	4733292	Cylinder Assy (Lift Height 3400mm/133.9in)	1
	4733293	Cylinder Assy (LH 3500mm/137.8in)	1
	4733294	Cylinder Assy (Lift Height 3600mm/141.7in)	1
	4733295	Cylinder Assy (Lift Height 3700mm/145.7in)	1
	4733296	Cylinder Assy (Lift Height 3800mm/149.6in)	1
	4733297	Cylinder Assy (Lift Height 4020mm/158.3in)	1
	4733302	Cylinder Assy (Lift Height 4520mm/178in)	1
	4733306	Cylinder Assy (Lift Height 4920mm/193.7in)	1
	4733311	Cylinder Assy (Lift Height (LH 5520mm/217.3in)	1
1	4673171	Tube Wldmt-Cylinder (Lift Height 3000mm/118.1in)	1
1	4673173	Tube Wldmt-Cylinder (Lift Height 3200mm/126in)	1
1	4673174	Tube Wldmt-Cylinder (Lift Height 3300mm/129.9in)	1
1	4673175	Tube Wldmt-Cylinder (Lift Height 3400mm/133.9in)	1
1	4673176	Tube Wldmt-Cylinder (Lift Height 3500mm/137.8in)	1
1	4673177	Tube Wldmt-Cylinder (Lift Height 3600mm/141.7in)	1
1	4673178	Tube Wldmt-Cylinder (Lift Height 3700mm/145.7in)	1
1	4673179	Tube Wldmt-Cylinder (Lift Height 3800mm/149.6in)	1
1	4673180	Tube Wldmt-Cylinder (Lift Height 4020mm/158.3in)	1
1	4673185	Tube Wldmt-Cylinder (Lift Height 4520mm/178in)	1
1	4673189	Tube Wldmt-Cylinder (Lift Height 4920mm/193.7in)	1
1	4673194	Tube Wldmt-Cylinder (Lift Height 5520mm/217.3in)	1
2	4733256	Rod Assy (Lift Height 3000mm/118.1in)	1
2	4733258	Rod Assy (Lift Height 3200mm/126in)	1
2	4733259	Rod Assy (Lift Height 3300mm/129.9in)	1
2	4733260	Rod Assy (Lift Height 3400mm/133.9in)	1
2	4733261	Rod Assy (Lift Height 3500mm/137.8in)	1
2	4733262	Rod Assy (Lift Height 3600mm/141.7in)	1
2	4733263	Rod Assy (Lift Height 3700mm/145.7in)	1
2	4733264	Rod Assy (Lift Height 3800mm/149.6in)	1
2	4733265	Rod Assy (Lift Height 4020mm/158.3in)	1
2	4733270	Rod Assy (Lift Height 4520mm/178in)	1
2	4733274	Rod Assy (Lift Height 4920mm/193.7in)	1
2	4733279	Rod Assy (Lift Height 5520mm/217.3in)	1
3	4731845	Piston Seal	1
4	1356748	Piston Ring	1
5	1355713	Gland	1
6	1381095	Rod Seal	1
7	1463104	Rod Wiper (Type "AY")	1
8	147972	Back-Up Ring	1
9	59229	O-Ring	1
10	295649	Screw (Button Head)	1
10	4363244	Capscrew (Optional)	1
11	190887	Sealing Ring	1
12	2045872	Spacer (Lift Height 4020mm/158.3in - 4920mm/193.7in)	1
12	4673590	Spacer (Lift Height 5520mm/217.3in)	1
13	60836	O-Ring	1
14	1356751	Wear Ring	1

©2026 HYSTER COMPANY

RIGHT HAND MAIN LIFT CYLINDERS

TWO STAGE FULL FREE-LIFT – F509 (PENDING PER ECN 16126609 →)

ITEM	PART NO.	DESCRIPTION	QTY
	4733224	Kit-Seal	1

©2026 HYSTER COMPANY

NOTES

MAST ASSEMBLY (FIGURE 18-6)
TWO STAGE FULL FREE-LIFT — F564 (PAGE 1 OF 2)

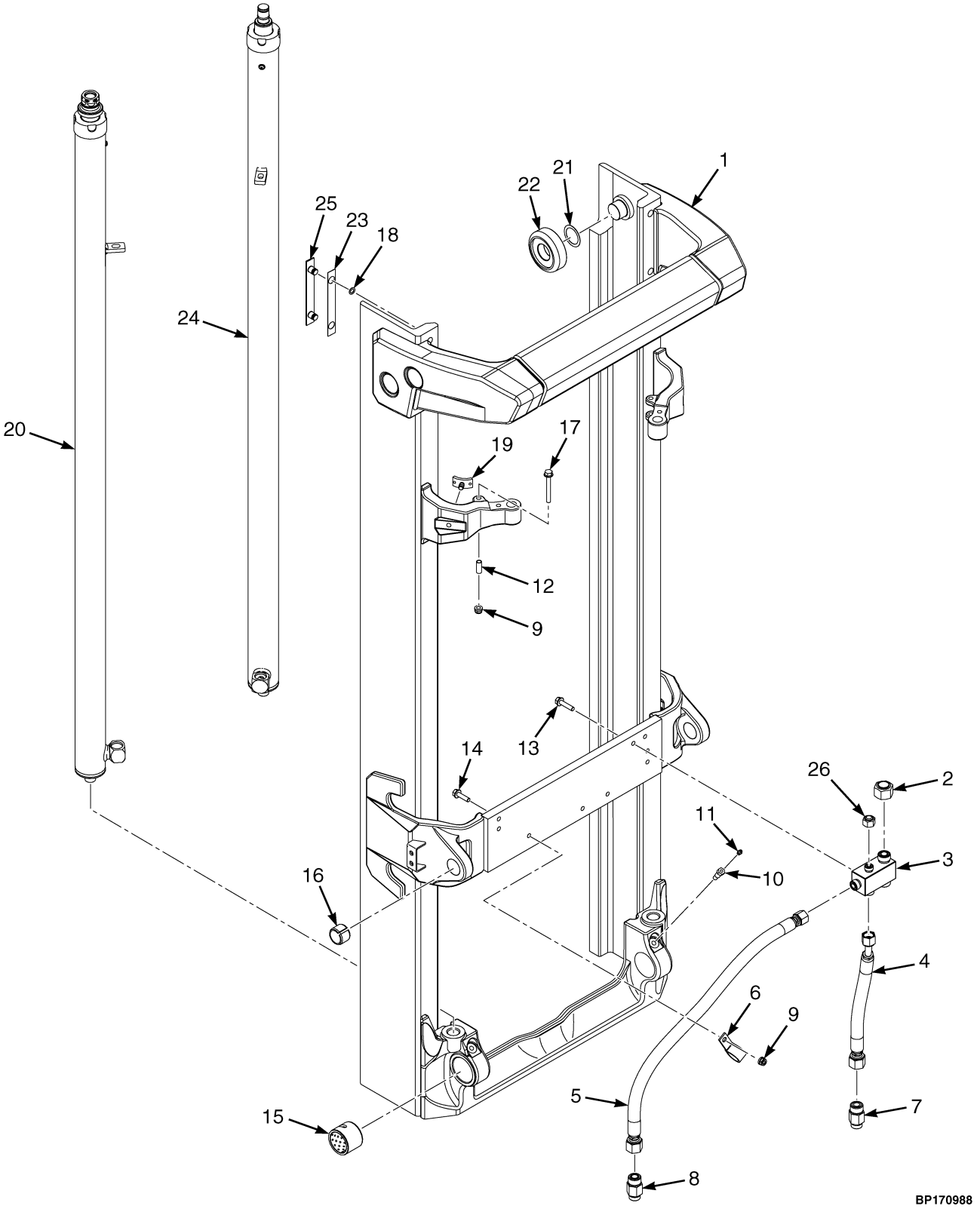

©2026 HYSTER COMPANY

MAST ASSEMBLY

TWO STAGE FULL FREE-LIFT – F564 (PAGE 1 OF 2)

F564

ITEM	DESCRIPTION 1 2 3 4	LIFT HEIGHT TO BOTTOM OF FORKS				
		2954 mm (116.3 in.)	3054 mm (120.2 in.)	3154 mm (124.2 in.)	3254 mm (128.1 in.)	3354 mm (132.0 in.)
	Mast Group Number	F564 2954	F564 3054	F564 3154	F564 3254	F564 3354
	Mast Assy	4686557	4686558	4686559	4686560	4686561
1	Outer Mast	4224652	4224653	4224654	4224655	4224656

F564

ITEM	DESCRIPTION 1 2 3 4	LIFT HEIGHT TO BOTTOM OF FORKS			
		3454 mm (136.0 in.)	3554 mm (139.9 in.)	3654 mm (143.9 in.)	3954 mm (155.7 in.)
	Mast Group Number	F564 3454	F564 3554	F564 3654	F564 3954
	Mast Assy	4686562	4686563	4686564	4686567
1	Outer Mast	4224657	4224658	4224659	4224663

F564

ITEM	DESCRIPTION 1 2 3 4	LIFT HEIGHT TO BOTTOM OF FORKS			
		4054 mm (159.6 in.)	4454 mm (175.4 in.)	4954 mm (195.0 in.)	5354 mm (210.8 in.)
	Mast Group Number	F564 4054	F564 4454	F564 4954	F564 5354
	Mast Assy	4686569	4686573	4686577	4686581
1	Outer Mast	4224664	4224668	4224674	4224678

ITEM	PART NO.	DESCRIPTION	QTY
	a	Mast Assy	1
1	**a**	Outer Mast	1
1	4231443	Stubshaft	2
2	1529017	Fitting (Blind Plug/Cap)	1
3	4245292	Manifold - Mast Connection Block	1
4	4700254	Hose Assy	1
5	4700253	Hose Assy	1
6	1310611	Clamp	1
7	4700616	Hyd Velocity Fuse	1
8	1486749	Fitting	1
9	4187690	Locknut	6
10	4033412	Capscrew , Lubed	2
11	16010	Grease Fitting	1
12	~~4309896~~		
	4369706	Spacer	2
12	~~4309896~~		
	4369706	Spacer (Alternate Part)	2

©2026 HYSTER COMPANY

MAST ASSEMBLY

TWO STAGE FULL FREE-LIFT – F564 (PAGE 1 OF 2)

ITEM	PART NO.	DESCRIPTION	QTY
13	4185431	Capscrew	2
14	4185430	Capscrew	1
15	4033414	Bushing	2
16	300982	Bushing	2
17	4189066	Capscrew	2
18	104506	O-Ring	4
19	4176370	Rubber Pad	2
20	. . . . .	Main Lift Cylinder (LH) (☞Figure 18-8)	1
21	129387	Shim (0.020 in.)	8
22	4249502	Load Roller	2
22	4249501	Load Roller (Optional)	2
23	4253176	Shim	2
23	4253175	Shim (Optional)	2
24	. . . . .	Main Lift Cylinder (RH) (☞Figure 18-9, ☞Figure 18-10)	1
25	4253173	Wear Strip	2
26	1529015	Cap (w/o Accumulator)	1

FOOTNOTES:

a Refer to Table

©2026 HYSTER COMPANY

NOTES

MAST ASSEMBLY (FIGURE 18-7)
TWO STAGE FULL FREE-LIFT — F564 (PAGE 2 OF 2)

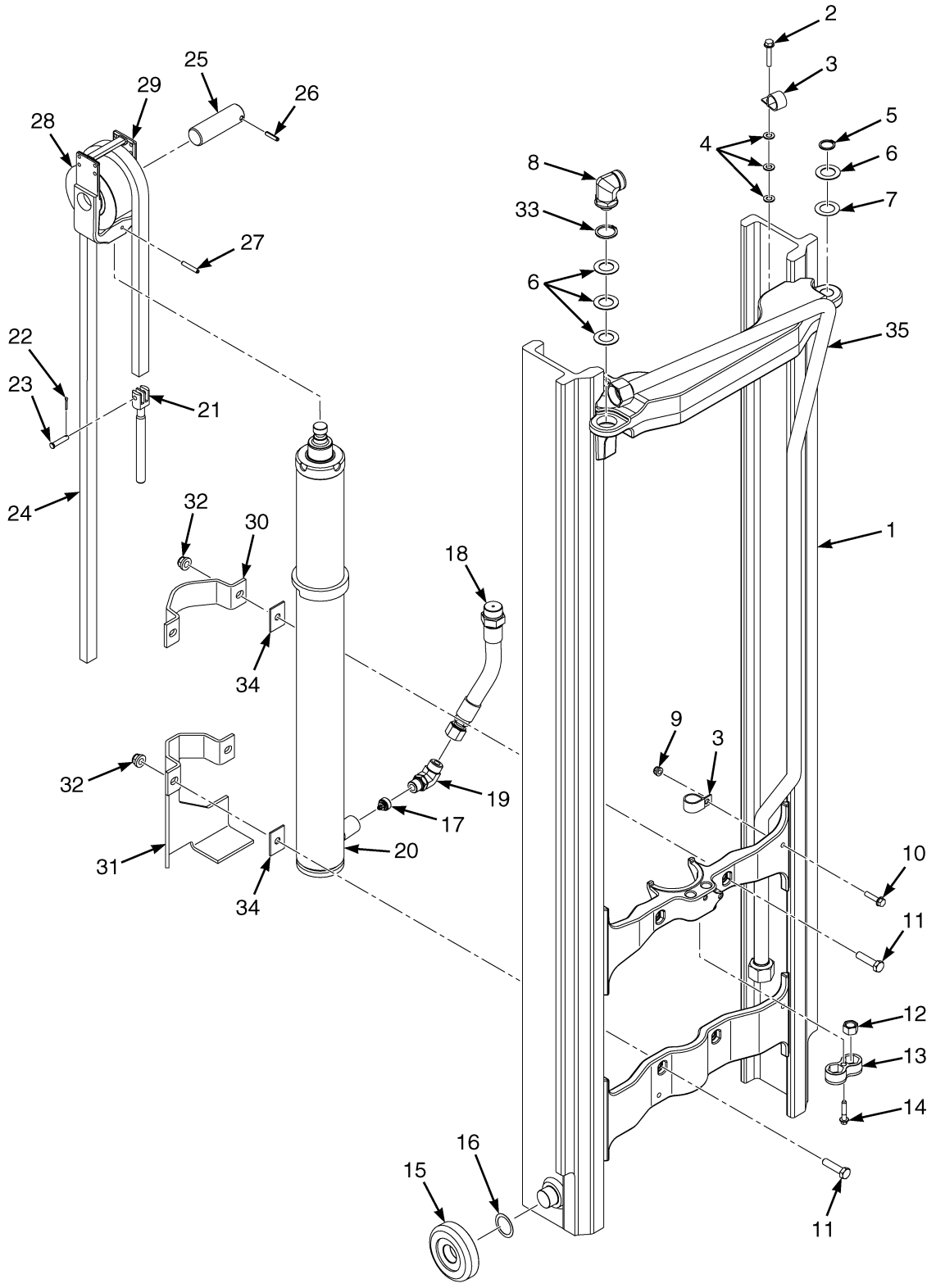

©2026 HYSTER COMPANY

MAST ASSEMBLY

TWO STAGE FULL FREE-LIFT – F564 (PAGE 2 OF 2)

F564

ITEM	DESCRIPTION 1 2 3 4	LIFT HEIGHT TO BOTTOM OF FORKS				
		2954 mm (116.3 in.)	3054 mm (120.2 in.)	3154 mm (124.2 in.)	3254 mm (128.1 in.)	3354 mm (132.0 in.)
	Mast Group Number	F564 2954	F564 3054	F564 3154	F564 3254	F564 3354
	Mast Assy	4686557	4686558	4686559	4686560	4686561
1	Intermediate Mast	4234502	4234503	4234504	4234505	4234506
18	Hose Assy	4710450	4710451	4710452	4710452	4710449
24	Leaf Chain - Fixed Length	4250919	4250920	4250921	4250923	4250924
35	Tube Assy	4693519	4693519	4693519	4700632	4693520

F564

ITEM	DESCRIPTION 1 2 3 4	LIFT HEIGHT TO BOTTOM OF FORKS			
		3454 mm (136.0 in.)	3554 mm (139.9 in.)	3654 mm (143.9 in.)	3954 mm (155.7 in.)
	Mast Group Number	F564 3454	F564 3554	F564 3654	F564 3954
	Mast Assy	4686562	4686563	4686564	4686567
1	Intermediate Mast	4234507	4234508	4234509	4234513
18	Hose Assy	4710450	4710451	4710452	4710450
24	Leaf Chain - Fixed Length	4250925	4250927	4250928	4250933
35	Tube Assy	4693520	4693520	4693520	4693521

F564

ITEM	DESCRIPTION 1 2 3 4	LIFT HEIGHT TO BOTTOM OF FORKS			
		4054 mm (159.6 in.)	4454 mm (175.4 in.)	4954 mm (195.0 in.)	5354 mm (210.8 in.)
	Mast Group Number	F564 4054	F564 4454	F564 4954	F564 5354
	Mast Assy	4686569	4686573	4686577	4686581
1	Intermediate Mast	4234514	4234518	4234524	4234528
18	Hose Assy	4710451	4710451	4710449	4710453
24	Leaf Chain - Fixed Length	4250934	4250927	4250934	4250940
35	Tube Assy	4693521	4693522	4693518	4693518

ITEM	PART NO.	DESCRIPTION	QTY
	a	Mast Assy	1

MAST ASSEMBLY

TWO STAGE FULL FREE-LIFT – F564 (PAGE 2 OF 2)

ITEM	PART NO.	DESCRIPTION	QTY
1	**a**	Intermediate Mast	1
1	4231443	Stubshaft	2
2	4193301	Capscrew	1
3	178119	Clamp	3
3	4361913	Clamp (Alternate Part)	2
4	1581557	Washer	3
5	131358	Snap Ring	1
6	1333382	Washer (Mast Shim) (0.060 in.)	4
7	4242897	Shim	1
7	4242898	Shim (Optional)	1
8	1481090	Fitting	1
9	4187690	Locknut	3
10	4185431	Capscrew	2
11	1581827	Capscrew	4
12	4029443	Nut , Castle	2
13	4175491	Restraint - Chain Anchor nut, double	1
14	4133281	Capscrew	1
15	4249506	Load Roller	2
15	4249505	Load Roller (Optional)	2
16	129387	Shim (0.020 in.)	AR
17	4327449	Flow Valve	1
18	**a**	Hose Assy	1
19	4106301	Fitting	1
20	. . . . .	Free Lift Cylinder	1
21	4253420	Chain Anchor	2
22	~~2056815~~		
	15224	Cotter Pin	2
22	15222	Cotter Pin (Alternate Part)	2
23	4242899	Pin	2
24	**a**	Leaf Chain - Fixed Length	2
25	4172274	Pin - Hose Sheave	1
25	4341825	Pin (Alternate Part)	1
26	302465	Roll Pin	1
27	302468	Roll Pin	1
28	4223287	Chain Sheave	1
29	4249630	Crosshead	1
30	4057611	Clamp	1
31	4231398	Clamp	1
32	4187692	Locknut	4
33	304526	Snap Ring	1
34	1354902	Spacer	4
35	**a**	Tube Assy	1

FOOTNOTES:

a Refer to Table

©2026 HYSTER COMPANY

LEFT HAND MAIN LIFT CYLINDER (FIGURE 18-8)
TWO STAGE FULL FREE-LIFT — F564

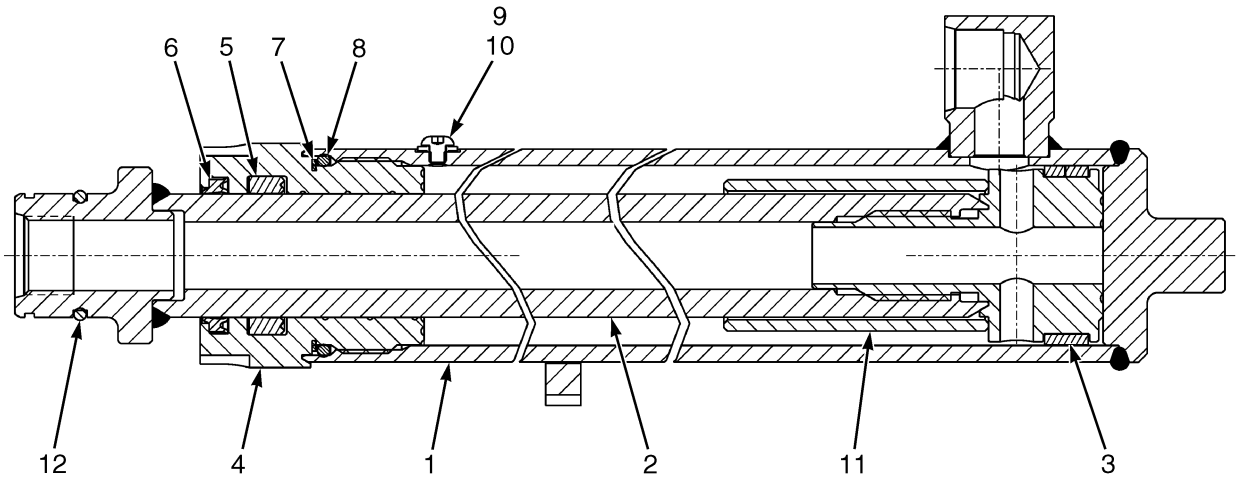

BP170990

LEFT HAND MAIN LIFT CYLINDER
TWO STAGE FULL FREE-LIFT – F564

F564

ITEM	DESCRIPTION 1 2 3 4	LIFT HEIGHT TO BOTTOM OF FORKS				
		2954 mm (116.3 in.)	3054 mm (120.2 in.)	3154 mm (124.2 in.)	3254 mm (128.1 in.)	3354 mm (132.0 in.)
	Mast Group Number	F564 2954	F564 3054	F564 3154	F564 3254	F564 3354
	Cylinder Group Number	8836757	8836758	8836759	8836760	8836761
	Cylinder Assy	4673106	4673107	4673108	4673109	4673110
1	Tube Wldmt-Cylinder	4673172	4673173	4673174	4673175	4673176
2	Cylinder Rod	4673029	4673030	4673031	4673032	4673033
11	Spacer	4673586	4673586	4673586	4673586	4673586

LEFT HAND MAIN LIFT CYLINDER

TWO STAGE FULL FREE-LIFT – F564

F564

ITEM	DESCRIPTION 1 2 3 4	LIFT HEIGHT TO BOTTOM OF FORKS			
		3454 mm (136.0 in.)	3554 mm (139.9 in.)	3654 mm (143.9 in.)	3954 mm (155.7 in.)
	Mast Group Number	F564 3454	F564 3554	F564 3654	F564 3954
	Cylinder Group Number	8836762	8836763	8836764	8836766
	Cylinder Assy	4673111	4673112	4673113	4673115
1	Tube Wldmt-Cylinder	4673177	4673178	4673179	4673181
2	Cylinder Rod	4673034	4673035	4673036	4673038
11	Spacer	4673586	4673586	4673586	4673592

F564

ITEM	DESCRIPTION 1 2 3 4	LIFT HEIGHT TO BOTTOM OF FORKS			
		4054 mm (159.6 in.)	4454 mm (175.4 in.)	4954 mm (195.0 in.)	5354 mm (210.8 in.)
	Mast Group Number	F564 4054	F564 4454	F564 4954	F564 5354
	Cylinder Group Number	8836767	8836771	8836775	8836779
	Cylinder Assy	4673116	4673120	4673124	4673128
1	Tube Wldmt-Cylinder	4673182	4673186	4673190	4673194
2	Cylinder Rod	4673039	4673043	4673047	4673051
11	Spacer	4673592	4673592	4673596	4673596

ITEM	PART NO.	DESCRIPTION	QTY
	a	Cylinder Assy	1
1	**a**	Tube Wldmt-Cylinder	1
2	**a**	Cylinder Rod	1
3	1356747	Wear Ring	1
4	1355713	Gland	1
5	1381095	Rod Seal	1
6	1463104	Rod Wiper (Type "AY")	1
7	147972	Back-Up Ring	1
8	59229	O-Ring	1
9	295649	Screw (Button Head)	1
10	190887	Sealing Ring	1
11	**a**	Spacer	1
12	39152	O-Ring	1
	1496922	Kit-Seal	1

See Service Manual for service procedures.
©2026 HYSTER COMPANY

FOOTNOTES:

a Refer to Table

RIGHT HAND MAIN LIFT CYLINDERS (FIGURE 18-9)

TWO STAGE FULL FREE-LIFT — F564 (→ PENDING PER ECN 16126609)

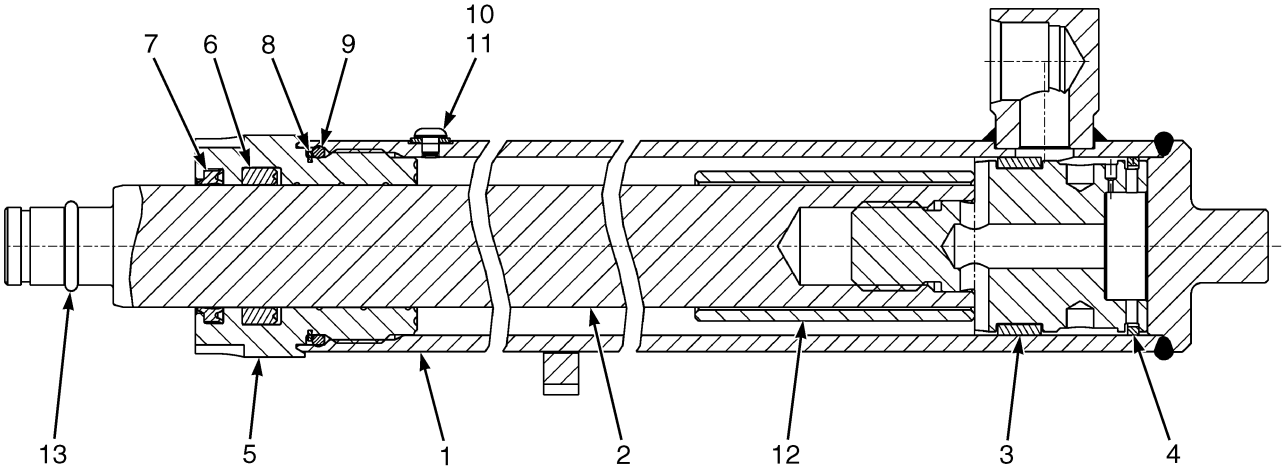

BP170991

©2026 HYSTER COMPANY

RIGHT HAND MAIN LIFT CYLINDERS

TWO STAGE FULL FREE-LIFT – F564 (→ PENDING PER ECN 16126609)

F564

ITEM	DESCRIPTION 1 2 3 4	LIFT HEIGHT TO BOTTOM OF FORKS				
		2954 mm (116.3 in.)	3054 mm (120.2 in.)	3154 mm (124.2 in.)	3254 mm (128.1 in.)	3354 mm (132.0 in.)
	Mast Group Number	F564 2954	F564 3054	F564 3154	F564 3254	F564 3354
	Cylinder Group Number	8836987	8836988	8836989	8836990	8836991
	Cylinder Assy	4673431	4673432	4673433	4673434	4673435
1	Tube Wldmt-Cylinder	4673172	4673173	4673174	4673175	4673176
2	Cylinder Rod	4673302	4673303	4673304	4673305	4673306
12	Spacer	1355711	1355711	1355711	1355711	1355711

F564

ITEM	DESCRIPTION 1 2 3 4	LIFT HEIGHT TO BOTTOM OF FORKS			
		3454 mm (136.0 in.)	3554 mm (139.9 in.)	3654 mm (143.9 in.)	3954 mm (155.7 in.)
	Mast Group Number	F564 3454	F564 3554	F564 3654	F564 3954
	Cylinder Group Number	8836992	8836993	8836994	8836996
	Cylinder Assy	4673436	4673437	4673438	4673440
1	Tube Wldmt-Cylinder	4673177	4673178	4673179	4673181
2	Cylinder Rod	4673307	4673308	4673309	4673311
12	Spacer	1355711	1355711	1355711	4658086

F564

ITEM	DESCRIPTION 1 2 3 4	LIFT HEIGHT TO BOTTOM OF FORKS			
		4054 mm (159.6 in.)	4454 mm (175.4 in.)	4954 mm (195.0 in.)	5354 mm (210.8 in.)
	Mast Group Number	F564 4054	F564 4454	F564 4954	F564 5354
	Cylinder Group Number	8836997	8837001	8837005	8837009
	Cylinder Assy	4673441	4673445	4673449	4673453
1	Tube Wldmt-Cylinder	4673182	4673186	4673190	4673194
2	Cylinder Rod	4673312	4673316	4673320	4673324
12	Spacer	4658086	4658086	2077818	2077818

RIGHT HAND MAIN LIFT CYLINDERS

TWO STAGE FULL FREE-LIFT – F564 (→ PENDING PER ECN 16126609)

ITEM	PART NO.	DESCRIPTION	QTY
	a	Cylinder Assy	1
1	**a**	Tube Wldmt-Cylinder	1
2	**a**	Cylinder Rod	1
3	1356747	Wear Ring	1
4	1356748	Piston Ring	1
5	1355713	Gland	1
6	1381095	Rod Seal	1
7	1463104	Rod Wiper (Type "AY")	1
8	147972	Back-Up Ring	1
9	59229	O-Ring	1
10	295649	Screw (Button Head)	1
11	190887	Sealing Ring	1
12	**a**	Spacer	1
13	100153	O-Ring	1
13	60836	O-Ring (Alternate Part)	1
	1496922	Kit-Seal	1

FOOTNOTES:

a Refer to Table

©2026 HYSTER COMPANY

NOTES

RIGHT HAND MAIN LIFT CYLINDERS (FIGURE 18-10)

TWO STAGE FULL FREE-LIFT — F564 (PENDING PER ECN 16126609 →)

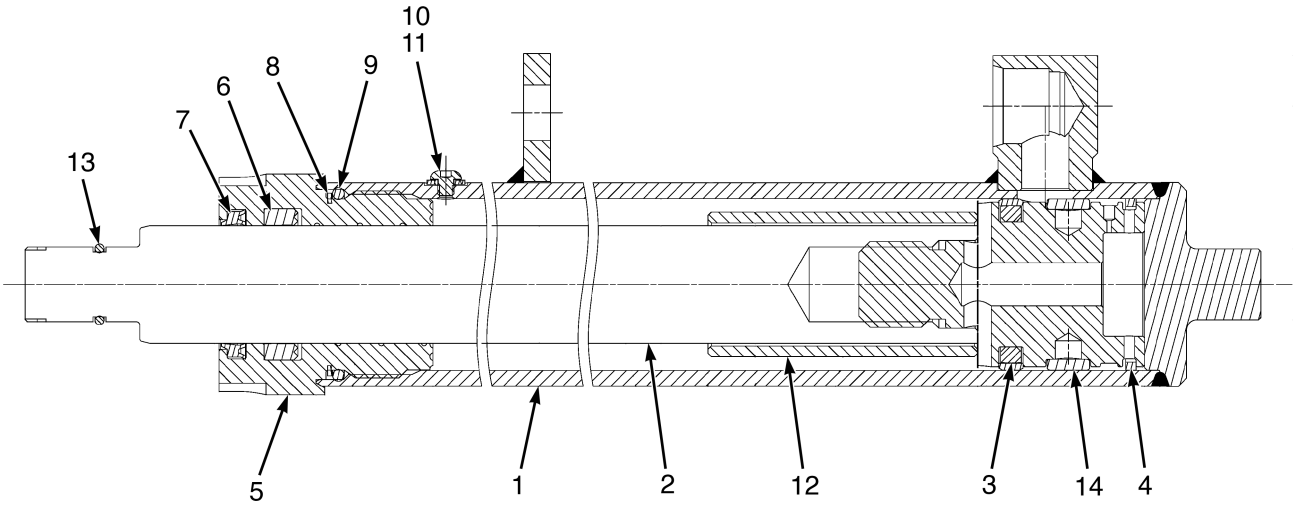

BP171277

©2026 HYSTER COMPANY

RIGHT HAND MAIN LIFT CYLINDERS

TWO STAGE FULL FREE-LIFT – F564 (PENDING PER ECN 16126609 →)

ITEM	PART NO.	DESCRIPTION	QTY
	4733319	Cylinder Assy (LH 2954mm/116.3in)	1
	4733320	Cylinder Assy (LH 3054mm/120.2in)	1
	4733321	Cylinder Assy (LH 3154mm/124.2in)	1
	4733322	Cylinder Assy (LH 3254mm/128.1in)	1
	4733323	Cylinder Assy (LH 3354mm/132in)	1
	4733324	Cylinder Assy (LH 3454mm/136in)	1
	4733325	Cylinder Assy (LH 3554mm/139.9in)	1
	4733326	Cylinder Assy (LH 3654mm/143.9in)	1
	4733328	Cylinder Assy (LH 3954mm/155.7in)	1
	4733329	Cylinder Assy (LH 4054mm/159.6in)	1
	4733333	Cylinder Assy (LH 4454mm/175.4in)	1
	4733337	Cylinder Assy (LH 4954mm/195in)	1
	4733341	Cylinder Assy (LH 5354mm/210.8in)	1
1	4673172	Tube Wldmt-Cylinder (LH 2954mm/116.3in)	1
1	4673173	Tube Wldmt-Cylinder (LH 3054mm/120.2in)	1
1	4673174	Tube Wldmt-Cylinder (LH 3154mm/124.2in)	1
1	4673175	Tube Wldmt-Cylinder (LH 3254mm/128.1in)	1
1	4673176	Tube Wldmt-Cylinder (LH 3354mm/132in)	1
1	4673177	Tube Wldmt-Cylinder (LH 3454mm/136in)	1
1	4673178	Tube Wldmt-Cylinder (LH 3554mm/139.9in)	1
1	4673179	Tube Wldmt-Cylinder (LH 3654mm/143.9in)	1
1	4673181	Tube Wldmt-Cylinder (LH 3954mm/155.7in)	1
1	4673182	Tube Wldmt-Cylinder (LH 4054mm/159.6in)	1
1	4673186	Tube Wldmt-Cylinder (LH 4454mm/175.4in)	1
1	4673190	Tube Wldmt-Cylinder (LH 4954mm/195in)	1
1	4673194	Tube Wldmt-Cylinder (LH 5354mm/210.8in)	1
2	4733257	Rod Assy (LH 2954mm/116.3in)	1
2	4733258	Rod Assy (LH 3054mm/120.2in)	1
2	4733259	Rod Assy (LH 3154mm/124.2in)	1
2	4733260	Rod Assy (LH 3254mm/128.1in)	1
2	4733261	Rod Assy (LH 3354mm/132in)	1
2	4733262	Rod Assy (LH 3454mm/136in)	1
2	4733263	Rod Assy (LH 3554mm/139.9in)	1
2	4733264	Rod Assy (LH 3654mm/143.9in)	1
2	4733266	Rod Assy (LH 3954mm/155.7in)	1
2	4733267	Rod Assy (LH 4054mm/159.6in)	1
2	4733271	Rod Assy (LH 4454mm/175.4in)	1
2	4733275	Rod Assy (LH 4954mm/195in)	1
2	4733279	Rod Assy (LH 5354mm/210.8in)	1
3	4731845	Piston Seal	1
4	1356748	Piston Ring	1
5	1355713	Gland	1
6	1381095	Rod Seal	1
7	1463104	Rod Wiper (Type "AY")	1
8	147972	Back-Up Ring	1
9	59229	O-Ring	1
10	295649	Screw (Button Head)	1
10	4363244	Capscrew (Optional)	1
11	190887	Sealing Ring	1
12	1355711	Spacer (LH 2954mm/116.3in - 3654mm/143.9in)	1

©2026 HYSTER COMPANY

RIGHT HAND MAIN LIFT CYLINDERS

TWO STAGE FULL FREE-LIFT – F564 (PENDING PER ECN 16126609 →)

ITEM	PART NO.	DESCRIPTION	QTY
12	4658086	Spacer (LH 3954mm/155.7in - 4454mm/175.4in)	1
12	2077818	Spacer (LH 4954mm/195in - 5354mm/210.8in)	1
13	60836	O-Ring	1
14	1356751	Wear Ring	1
	4733224	Kit-Seal	1
	1360131	Sleeve	1

See Service Manual for service procedures.
©2026 HYSTER COMPANY

FREE-LIFT CYLINDER (FIGURE 18-11)
TWO STAGE FULL FREE-LIFT — F509\F564

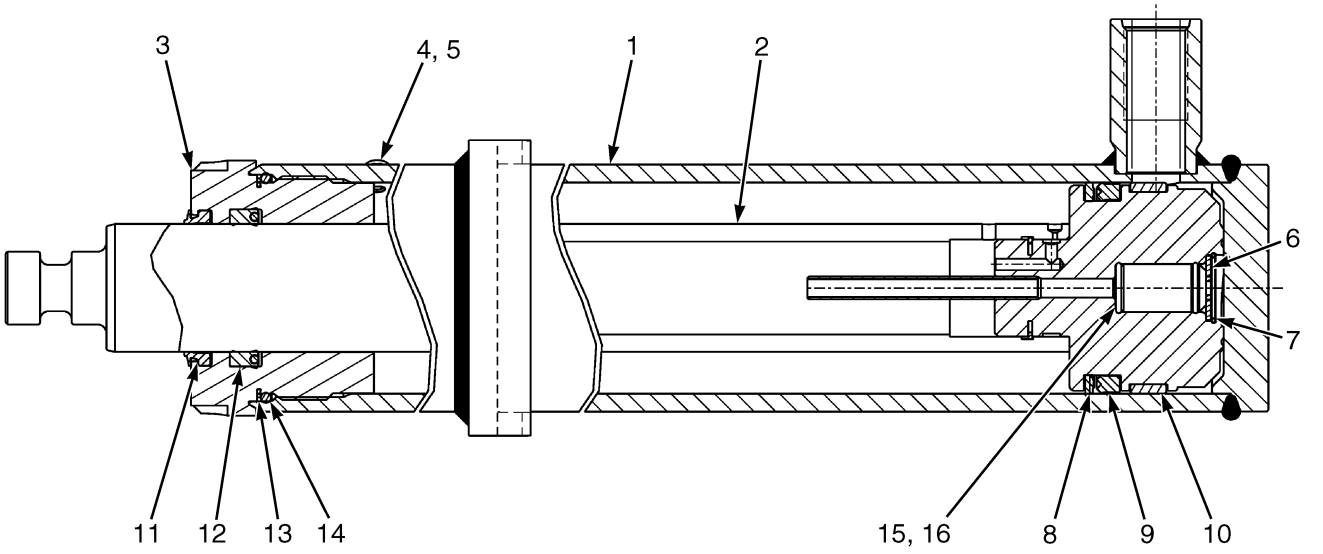

BP170992

FREE-LIFT CYLINDER
TWO STAGE FULL FREE-LIFT – F509\F564

F509

ITEM	DESCRIPTION 1 2 3 4	LIFT HEIGHT TO BOTTOM OF FORKS			
		3000 mm (118.1 in.)	3200 mm (126.0 in.)	3300 mm (129.9 in.)	3400 mm (133.9 in.)
	Mast Group Number	**F509 3000**	**F509 3200**	**F509 3300**	**F509 3400**
	Cylinder Group Number	**8609601**	**8609603**	**8609604**	**8609605**
	Cylinder Assy	4680810	4680812	4680813	4680814
1	Tube Wldmt-Cylinder	4251401	4251403	4251404	4251405
2	Cylinder Rod	4179933	4179935	4179936	4179961

FREE-LIFT CYLINDER

TWO STAGE FULL FREE-LIFT – F509\F564

F509

ITEM	DESCRIPTION 1 2 3 4	LIFT HEIGHT TO BOTTOM OF FORKS			
		3500 mm (137.8 in.)	**3600 mm (141.7 in.)**	**3700 mm (145.7 in.)**	**3800 mm (149.6 in.)**
	Mast Group Number	**F509 3500**	**F509 3600**	**F509 3700**	**F509 3800**
	Cylinder Group Number	**8609606**	**8609607**	**8609608**	**8609609**
	Cylinder Assy	4680815	4680817	4680819	4680820
1	Tube Wldmt-Cylinder	4251406	4251407	4251408	4251409
2	Cylinder Rod	4179937	4179938	4179939	4179940

F509

ITEM	DESCRIPTION 1 2 3 4	LIFT HEIGHT TO BOTTOM OF FORKS			
		4020 mm (158.3 in.)	**4520 mm (178.0 in.)**	**4920 mm (193.7 in.)**	**5520 mm (217.3 in.)**
	Mast Group Number	**F509 4020**	**F509 4520**	**F509 4920**	**F509 5520**
	Cylinder Group Number	**8609611**	**8609616**	**8609620**	**8609627**
	Cylinder Assy	4680824	4680835	4680841	4680854
1	Tube Wldmt-Cylinder	4251411	4251416	4251420	4251427
2	Cylinder Rod	4179942	4179946	4179949	4179955

F564

ITEM	DESCRIPTION 1 2 3 4	LIFT HEIGHT TO BOTTOM OF FORKS				
		2954 mm (116.3 in.)	**3054 mm (120.2 in.)**	**3154 mm (124.2 in.)**	**3254 mm (128.1 in.)**	**3354 mm (132.0 in.)**
	Mast Group Number	**F564 2954**	**F564 3054**	**F564 3154**	**F564 3254**	**F564 3354**
	Cylinder Group Number	**8609702**	**8609703**	**8609704**	**8609705**	**8609706**
	Cylinder Assy	4681932	4681933	4681934	4681935	4681936
1	Tube Wldmt-Cylinder	4251352	4251353	4251354	4251355	4251356
2	Cylinder Rod	4180014	4180015	4180016	4180041	4180017

©2026 HYSTER COMPANY

FREE-LIFT CYLINDER

TWO STAGE FULL FREE-LIFT – F509\F564

F564

ITEM	DESCRIPTION 1 2 3 4	LIFT HEIGHT TO BOTTOM OF FORKS			
		3454 mm (136.0 in.)	3554 mm (139.9 in.)	3654 mm (143.9 in.)	3954 mm (155.7 in.)
	Mast Group Number	F564 3454	F564 3554	F564 3654	F564 3954
	Cylinder Group Number	8609707	8609708	8609709	8609712
	Cylinder Assy	4681937	4681938	4681939	4681942
1	Tube Wldmt-Cylinder	4251357	4251358	4251359	4251362
2	Cylinder Rod	4180018	4180019	4180020	4180023

F564

ITEM	DESCRIPTION 1 2 3 4	LIFT HEIGHT TO BOTTOM OF FORKS			
		4054 mm (159.6 in.)	4454 mm (175.4 in.)	4954 mm (195.0 in.)	5354 mm (210.8 in.)
	Mast Group Number	F564 4054	F564 4454	F564 4954	F564 5354
	Cylinder Group Number	8609713	8609717	8609723	8609727
	Cylinder Assy	4681943	4680880	4680886	4680890
1	Tube Wldmt-Cylinder	4251363	4251367	4251373	4251377
2	Cylinder Rod	4180024	4180027	4180032	4180035

KEY:
A: F509 Mast
B: F564 Mast

ITEM	PART NO.	DESCRIPTION	QTY A	QTY B
	a	Cylinder Assy	1	1
1	**a**	Tube Wldmt-Cylinder	1	1
2	**a**	Cylinder Rod	1	1
3	~~4601465~~			
	4719149	Gland	1	1
4	190887	Sealing Ring	1	1
5	1361302	Screw	1	1
6	297531	Washer	1	1
6	637635	Washer (Optional)	1	1
7	187388	Snap Ring	1	1
8	2013089	Back-Up Ring	1	..
8	637565	Back-Up Ring	..	1
9	2013088	Rod Seal	1	..
9	309062	Rod Seal	..	1

FREE-LIFT CYLINDER

TWO STAGE FULL FREE-LIFT – F509\F564

KEY:
A: F509 Mast
B: F564 Mast

ITEM	PART NO.	DESCRIPTION	QTY A	QTY B
10	1358972	Wear Ring	1	..
10	636941	Wear Ring	..	1
11	1464001	Rod Wiper	1	1
12	1622946	Rod Seal	1	1
13	147973	Back-Up Ring	1	..
13	164840	Back-Up Ring	..	1
14	90263	O-Ring	1	..
14	15880	O-Ring	..	1
15	257913	Check Valve	1	1
16	190580	O-Ring	1	1
	4681457	Kit-Seal Kit	1	..
	4681458	Kit-Seal Kit	..	1

FOOTNOTES:

a Refer to Table

See Service Manual for service procedures.
©2026 HYSTER COMPANY

NOTES

CARRIAGE (FIGURE 18-12)

INTEGRAL SIDE-SHIFT — TWO STAGE FULL FREE-LIFT

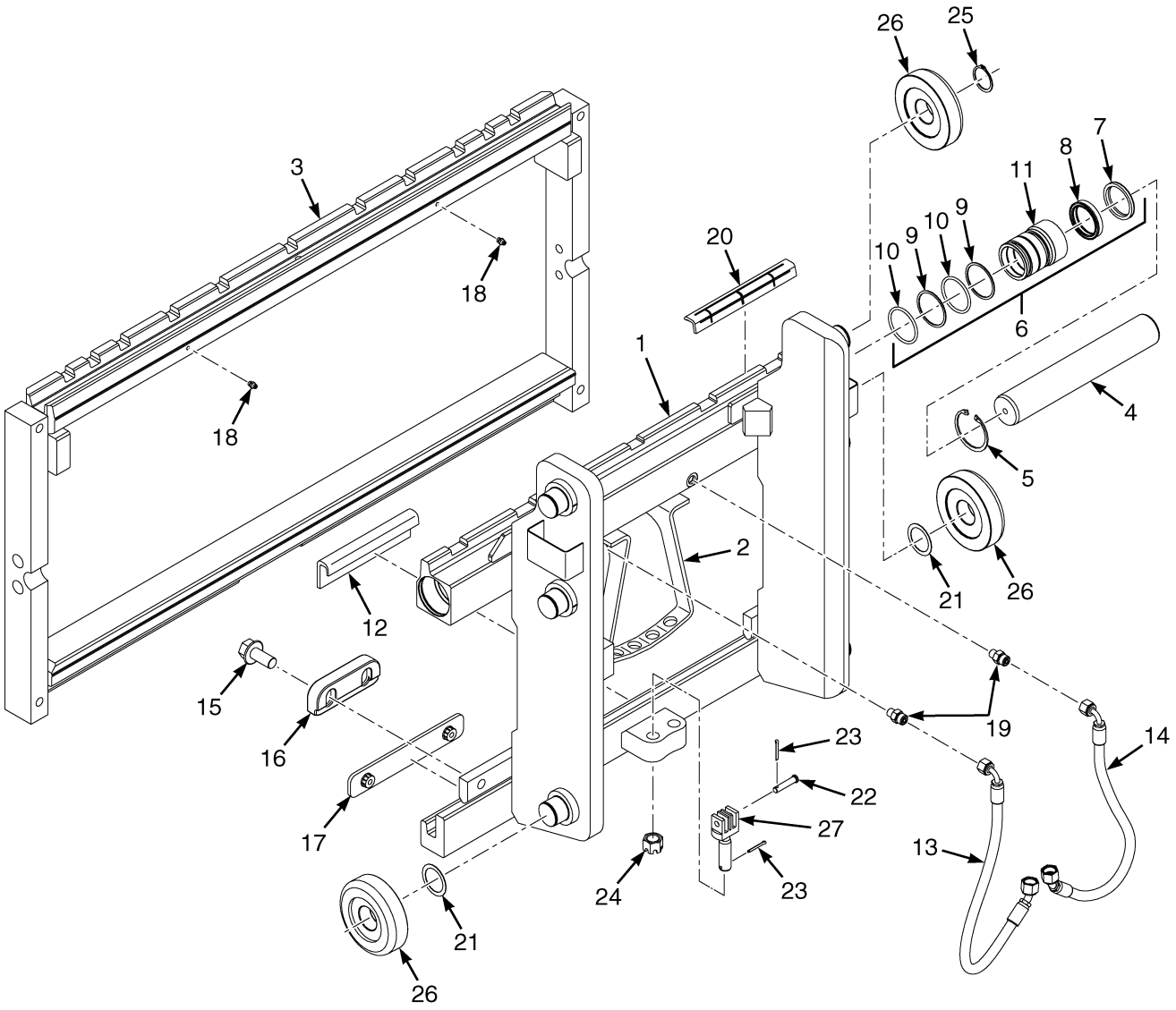

©2026 HYSTER COMPANY

CARRIAGE

INTEGRAL SIDE-SHIFT – TWO STAGE FULL FREE-LIFT

KEY:
A: Class II
B: Class III

ITEM	PART NO.	DESCRIPTION	QTY A	QTY B
	4695350	Side-Shift Carriage , ISS Class II	1	..
	4695352	Side-Shift Carriage - ISS, Class II (1067mm) Large Tire Variant	1	..
	4695358	Side-Shift Carriage - ISS, Class III (1067mm)	..	1
	4695359	Side-Shift Carriage - ISS, Class III (1220mm)	..	1
	4695360	Side-Shift Carriage - ISS, Class III (1372mm)	..	1
1	4263859	Carriage Wldmt (Class II)	1	..
1	4266966	Carriage Wldmt (Class II) Large Tire Variant	1	..
1	4224587	Carriage Wldmt (1067mm Class III)	..	1
1	4224588	Carriage Wldmt (1220mm Class III)	..	1
1	4224589	Carriage Wldmt (1372mm Class III)	..	1
1	4258594	Stubshaft	6	6
2	4187428	Plate (Hose)	1	..
2	4261322	Plate (Hose)	..	1
3	4330059	Frame (42in) (1067mm)	1	..
3	4330083	Frame (42in) (1067mm)	..	1
3	4330084	Frame (48in) (1219mm)	..	1
3	4330085	Frame (54in) (1372mm)	..	1
4	4090982	Cylinder Rod	2	..
4	4090984	Cylinder Rod (1067mm)	..	2
4	4090985	Cylinder Rod (1220mm/1372mm)	..	2
5	128444	Snap Ring	2	..
5	304552	Snap Ring	..	2
6	4215251	Gland Assembly	2	..
6	4215252	Gland (Assembly) (Class III)	..	2
7	1383064	Rod Wiper	2	..
7	1383065	Rod Wiper	..	2
8	2032488	Seal	2	..
8	378440	Seal	..	2
9	153919	Back-Up Ring	4	..
9	147972	Back-Up Ring	..	4
10	55407	O-Ring	4	..
10	~~4028986~~			
	92861	O-Ring	..	4
11	4215095	Gland	1	..
11	4215096	Gland	..	1
12	4292621	Bearing - Strip Lower Carriage Bar (1067mm)	1	1
12	4292622	Bearing - Strip Lower Carriage Bar (1220mm)	..	1
12	4292623	Bearing - Strip Lower Carriage Bar (1375mm)	..	1
13	4684780	Hose Assy	..	1
13	4711992	Hose Assy	1	..
14	4684781	Hose Assy	..	1
14	4711993	Hose Assy	1	..
15	4239917	Capscrew	4	4
16	4687153	Hook (Lower)	2	2
17	4693334	Bearing (Lower)	2	2

©2026 HYSTER COMPANY

CARRIAGE

INTEGRAL SIDE-SHIFT – TWO STAGE FULL FREE-LIFT

KEY:
A: Class II
B: Class III

ITEM	PART NO.	DESCRIPTION	QTY A	QTY B
18	4318979	Grease Fitting	2	2
19	4116399	Fitting , Straight	2	2
20	4693335	Bearing (Upper)	2	2
21	129387	Shim (0.020 in.)	AR	AR
21	4263698	Shim (0.762 in.) (Optional)	AR	AR
22	4242899	Pin	2	2
23	~~2056815~~			
	15224	Cotter Pin	4	4
24	4219867	Nut , Castle	2	2
25	58901	Snap Ring	2	2
26	4251096	Load Roller	6	6
26	4251095	Load Roller (Optional)	6	6
27	4253177	Chain Anchor	2	..
27	4253180	Chain Anchor	..	2
	4217294	Kit-Seal (Class II)	1	..
	4217295	Kit-Seal (Class III)	..	1

©2026 HYSTER COMPANY

NOTES

CARRIAGE (FIGURE 18-13)
STANDARD — TWO STAGE FULL FREE-LIFT

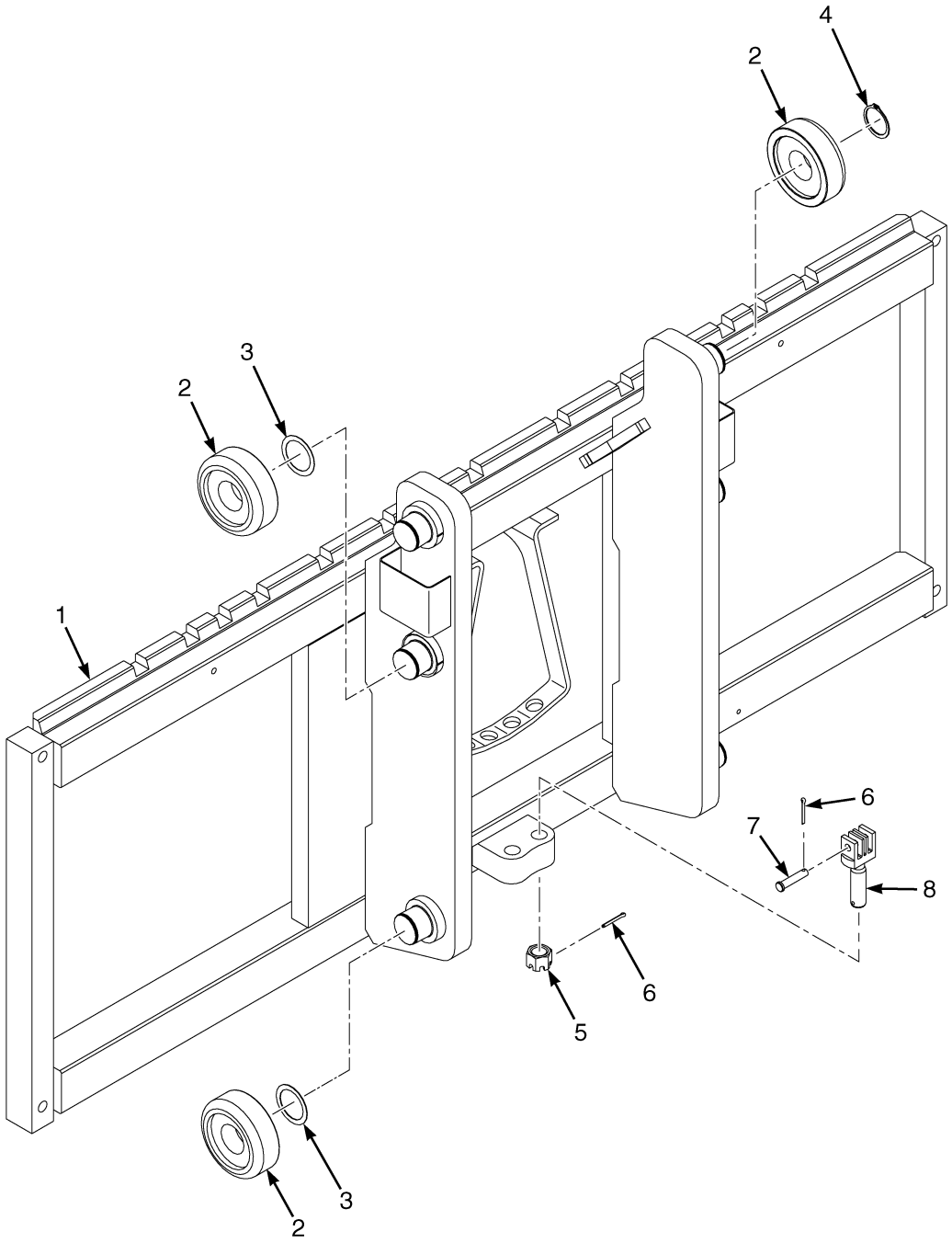

BP171049

©2026 HYSTER COMPANY

CARRIAGE

STANDARD – TWO STAGE FULL FREE-LIFT

KEY:
A: Class II
B: Class III

ITEM	PART NO.	DESCRIPTION	QTY A	QTY B
	4689691	Carriage - Std, Class II	1	..
	4680902	Carriage - Std, Class III	..	1
	4680903	Carriage - Std, Class III	..	1
	4680904	Carriage - Std, Class III	..	1
1	4224836	Carriage Wldmt (Class II)	1	..
1	4224796	Carriage Wldmt (1067mm Class III)	..	1
1	4224797	Carriage Wldmt (1220mm Class III)	..	1
1	4224798	Carriage Wldmt (1372mm Class III)	..	1
1	4258594	Stubshaft	6	6
2	4251096	Load Roller	6	6
2	4251095	Load Roller (Optional)	6	6
3	129387	Shim (0.020 in.)	AR	AR
3	4263698	Shim (0.762 in.) (Optional)	AR	AR
4	58901	Snap Ring	2	2
5	4219867	Nut , Castle	2	2
6	~~2056815~~			
	15224	Cotter Pin	4	4
7	4242899	Pin	2	2
8	4253177	Chain Anchor	2	..
8	4253180	Chain Anchor	..	2

HEADER HOSE AND ATTACHING PARTS (FIGURE 18-14)

TWO STAGE FULL FREE-LIFT (→ 8/2025)

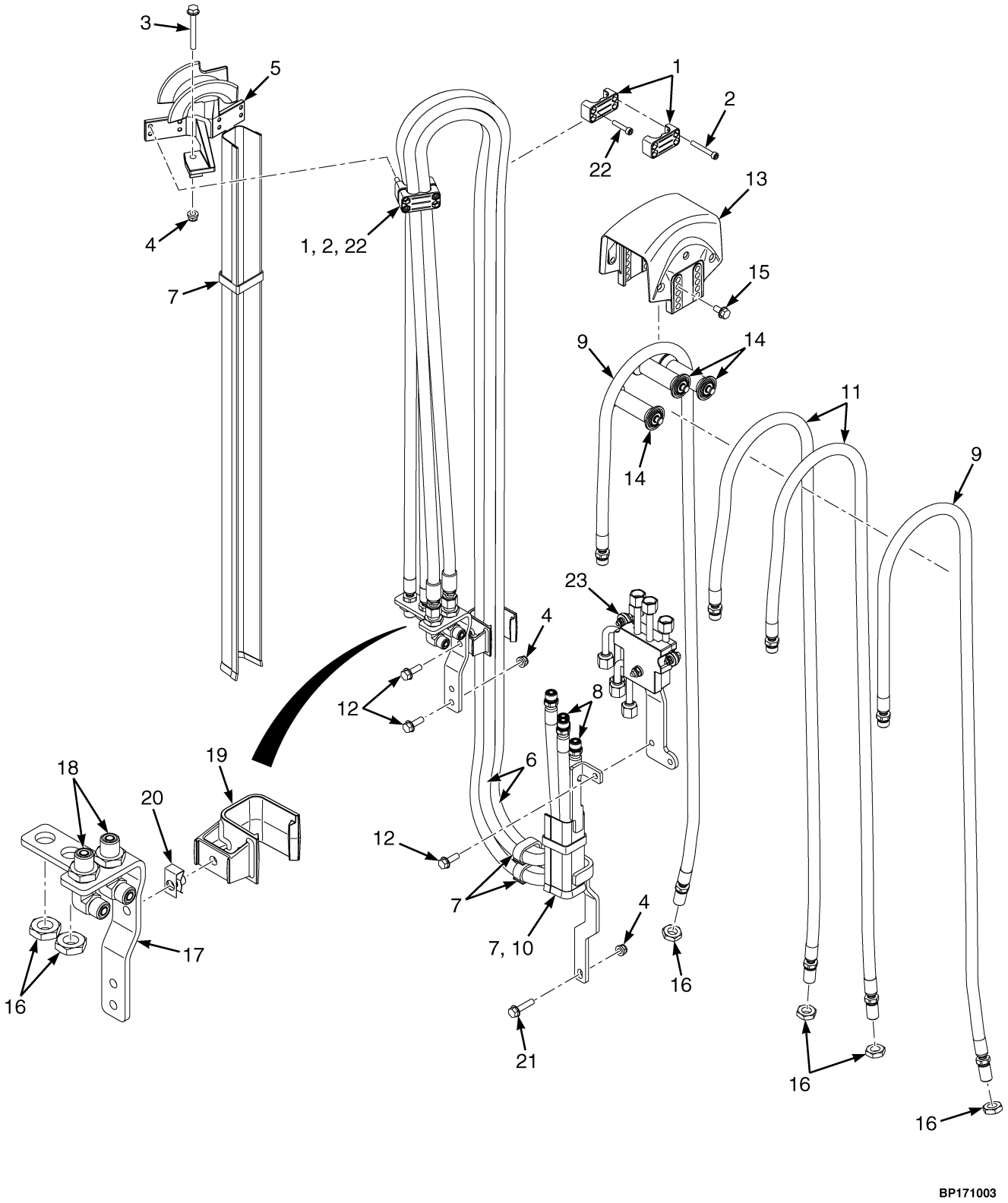

©2026 HYSTER COMPANY

HEADER HOSE AND ATTACHING PARTS

TWO STAGE FULL FREE-LIFT (→ 8/2025)

KEY:
A: 3 Function
B: 4 Function

ITEM	PART NO.	DESCRIPTION	QTY A	QTY B
1	4702210	Clamp	2	4
2	1581843	Capscrew	4	4
3	4189066	Capscrew	1	1
4	4187690	Locknut	4	4
5	**b** 4196851	Bracket Wldmt (w/ Channel) (Lift Height 2750/3000-3300/3154mm)	1	1
5	**c** 4728300	Bracket Wldmt (w/ Channel) (Lift Height 2750/3000-3300/3154mm)	1	1
5	**b** 4196852	Bracket Wldmt (w/ Channel) (Lift Height 3400/3254-3700/3554mm)	1	1
5	**c** 4728301	Bracket Wldmt (w/ Channel) (Lift Height 3400/3254-3700/3554mm)	1	1
5	**b** 4196853	Bracket Wldmt (w/ Channel) (Lift Height 3800/3654 and 4020/3854mm)	1	1
5	**c** 4728302	Bracket Wldmt (w/ Channel) (Lift Height 3800/3654 and 4020/3854mm)	1	1
5	**b** 4196854	Bracket Wldmt (w/ Channel) (Lift Height 4120/3954mm)	1	1
5	**c** 4728303	Bracket Wldmt (w/ Channel) (Lift Height 4120/3954mm)	1	1
5	**b** 4196855	Bracket Wldmt (w/ Channel) (Lift Height 4520/4354 and 4620/4454mm)	1	1
5	**c** 4728304	Bracket Wldmt (w/ Channel) (Lift Height 4520/4354 and 4620/4454mm)	1	1
5	**b** 4196856	Bracket Wldmt (w/ Channel) (Lift Height 4920/4754 and 5120/4954mm)	1	1
5	**c** 4728305	Bracket Wldmt (w/ Channel) (Lift Height 4920/4754 and 5120/4954mm)	1	1
5	**b** 4196857	Bracket Wldmt (w/ Channel) (Lift Height 5520/5354mm)	1	1
5	**c** 4728306	Bracket Wldmt (w/ Channel) (Lift Height 5520/5354mm)	1	1
6	4710471	Header Hose (Lift Height 2750-3000/2604-2854mm)	..	2
6	4710472	Header Hose (Lift Height 3100/2954mm)	..	2
6	4710473	Header Hose (Lift Height 3200/3054mm)	..	2
6	4710474	Header Hose (Lift Height 3300/3154mm)	..	2
6	4710475	Header Hose (Lift Height 3400/3254mm)	..	2
6	4710476	Header Hose (Lift Height 3500/3354mm)	..	2
6	4710477	Header Hose (Lift Height 3600/3454mm)	..	2
6	4710478	Header Hose (Lift Height 3700/3554mm)	..	2
6	4710479	Header Hose (Lift Height 3800/3654mm)	..	2
6	4710482	Header Hose (Lift Height 4020/3854mm)	..	2
6	4710483	Header Hose (Lift Height 4120/3954mm)	..	2
6	4710487	Header Hose (Lift Height 4520/4354mm)	..	2
6	**a** 4721309	Header Hose (Lift Height 4520/4354mm) (Alternate Part)	..	1
6	4710488	Header Hose (Lift Height 4620/4454mm)	..	2
6	**a** 4721310	Header Hose (Lift Height 4620/4454mm) (Alternate Part)	..	1
6	4710491	Header Hose (Lift Height 4920/4754mm)	..	2
6	**a** 4721313	Header Hose (Lift Height 4920/4754mm) (Alternate Part)	..	1
6	4710494	Header Hose (Lift Height 5120/4954mm)	..	2
6	**a** 4721316	Header Hose (Lift Height 5120/4954mm) (Alternate Part)	..	1
6	4710498	Header Hose (Lift Height 5520/5354mm)	..	2
6	**a** 4721320	Header Hose (Lift Height 5520/5354mm) (Alternate Part)	..	1
7	4215659	Retainer	AR	AR
8	4710421	Header Hose (Lift Height 2750-3000/2604-2854mm)	2	2
8	4710422	Header Hose (Lift Height 3100/2954mm)	2	2
8	4710423	Header Hose (Lift Height 3200/3054mm)	2	2
8	4710424	Header Hose (Lift Height 3300/3154mm)	2	2
8	4710425	Header Hose (Lift Height 3400/3254mm)	2	2

©2026 HYSTER COMPANY

HEADER HOSE AND ATTACHING PARTS

TWO STAGE FULL FREE-LIFT (→ 8/2025)

KEY:
A: 3 Function
B: 4 Function

ITEM	PART NO.	DESCRIPTION	QTY A	QTY B
8	4710426	Header Hose (Lift Height 3500/3354mm)	2	2
8	4710427	Header Hose (Lift Height 3600/3454mm)	2	2
8	4710428	Header Hose (Lift Height 3700/3554mm)	2	2
8	4710429	Header Hose (Lift Height 3800/3654mm)	2	2
8	4710432	Header Hose (Lift Height 4020/3854mm)	2	2
8	4710433	Header Hose (Lift Height 4120/3954mm)	2	2
8	4710437	Header Hose (Lift Height 4520/4354mm)	2	2
8	**a** 4721259	Header Hose (Lift Height 4520/4354mm) (Alternate Part)	1	1
8	4710438	Header Hose (Lift Height 4620/4454mm)	2	2
8	**a** 4721260	Header Hose (Lift Height 4620/4454mm) (Alternate Part)	1	1
8	4710441	Header Hose (Lift Height 4920/4754mm)	2	2
8	**a** 4721263	Header Hose (Lift Height 4920/4754mm) (Alternate Part)	1	1
8	4710444	Header Hose (Lift Height 5120/4954mm)	2	2
8	**a** 4721266	Header Hose (Lift Height 5120/4954mm) (Alternate Part)	1	1
8	4710448	Header Hose (Lift Height 5520/5354mm)	2	2
8	**a** 4721270	Header Hose (Lift Height 5520/5354mm) (Alternate Part)	1	1
9	4688217	Header Hose (Lift Height 2750-3000/2604-2854mm)	..	2
9	4688218	Header Hose (Lift Height 3100/2954mm)	..	2
9	4688219	Header Hose (Lift Height 3200/3054mm)	..	2
9	4688220	Header Hose (Lift Height 3300/3154mm)	..	2
9	4688221	Header Hose (Lift Height 3400/3254mm)	..	2
9	4688222	Header Hose (Lift Height 3500/3354mm)	..	2
9	4688223	Header Hose (Lift Height 3600/3454mm)	..	2
9	4688224	Header Hose (Lift Height 3700/3554mm)	..	2
9	4688225	Header Hose (Lift Height 3800/3654mm)	..	2
9	4688228	Header Hose (Lift Height 4020/3854mm)	..	2
9	4688229	Header Hose (Lift Height 4120/3954mm)	..	2
9	4688233	Header Hose (Lift Height 4520/4354mm)	..	2
9	4688234	Header Hose (Lift Height 4620/4454mm)	..	2
9	4688237	Header Hose (Lift Height 4920/4754mm)	..	2
9	4688240	Header Hose (Lift Height 5120/4954mm)	..	2
9	4688244	Header Hose (Lift Height 5520/5354mm)	..	2
10	4279056	Bracket Wldmt (Lift Height 2750/3000-4120/3954mm)	1	1
10	4279057	Bracket Wldmt (Lift Height 4520/4354-5520/5354mm)	1	1
11	4688184	Header Hose (Lift Height 2750-3000/2604-2854mm)	2	2
11	4688185	Header Hose (Lift Height 3100/2954mm)	2	2
11	4688186	Header Hose (Lift Height 3200/3054mm)	2	2
11	4688187	Header Hose (Lift Height 3300/3154mm)	2	2
11	4688188	Header Hose (Lift Height 3400/3254mm)	2	2
11	4688189	Header Hose (Lift Height 3500/3354mm)	2	2
11	4688190	Header Hose (Lift Height 3600/3454mm)	2	2
11	4688191	Header Hose (Lift Height 3700/3554mm)	2	2
11	4688192	Header Hose (Lift Height 3800/3654mm)	2	2
11	4688195	Header Hose (Lift Height 4020/3854mm)	2	2
11	4688196	Header Hose (Lift Height 4120/3954mm)	2	2

See Service Manual for service procedures.
©2026 HYSTER COMPANY

HEADER HOSE AND ATTACHING PARTS

TWO STAGE FULL FREE-LIFT (→ 8/2025)

KEY:
A: 3 Function
B: 4 Function

ITEM	PART NO.	DESCRIPTION	QTY A	QTY B
11	4688200	Header Hose (Lift Height 4520/4354mm)	2	2
11	4688201	Header Hose (Lift Height 4620/4454mm)	2	2
11	4688204	Header Hose (Lift Height 4920/4754mm)	2	2
11	4688207	Header Hose (Lift Height 5120/4954mm)	2	2
11	4688211	Header Hose (Lift Height 5520/5354mm)	2	2
12	4185429	Capscrew	5	5
13	4696052	Crosshead - Hose Guide	1	1
14	. . . . .	Roller	3	3
15	4223693	Capscrew	4	4
16	4187786	Nut	8	10
17	4249631	Bracket	1	1
18	1528579	Fitting	..	2
19	4260617	Molding - Trough Clamp	1	1
20	1398062	Nut (Fold Over)	1	1
21	4185431	Capscrew	1	1
22	1581742	Capscrew	2	4
23	. . . . .	Free Lift Tubes (☞Figure 18-18)	1	1

FOOTNOTES:

a Single twin line hose assembly
b → S/N R177V01662X
c S/N R177V01663X →

HEADER HOSE AND ATTACHING PARTS (FIGURE 18-15)

TWO STAGE FULL FREE-LIFT — H50A WITH 28X9 TIRES (→ 8/2025)

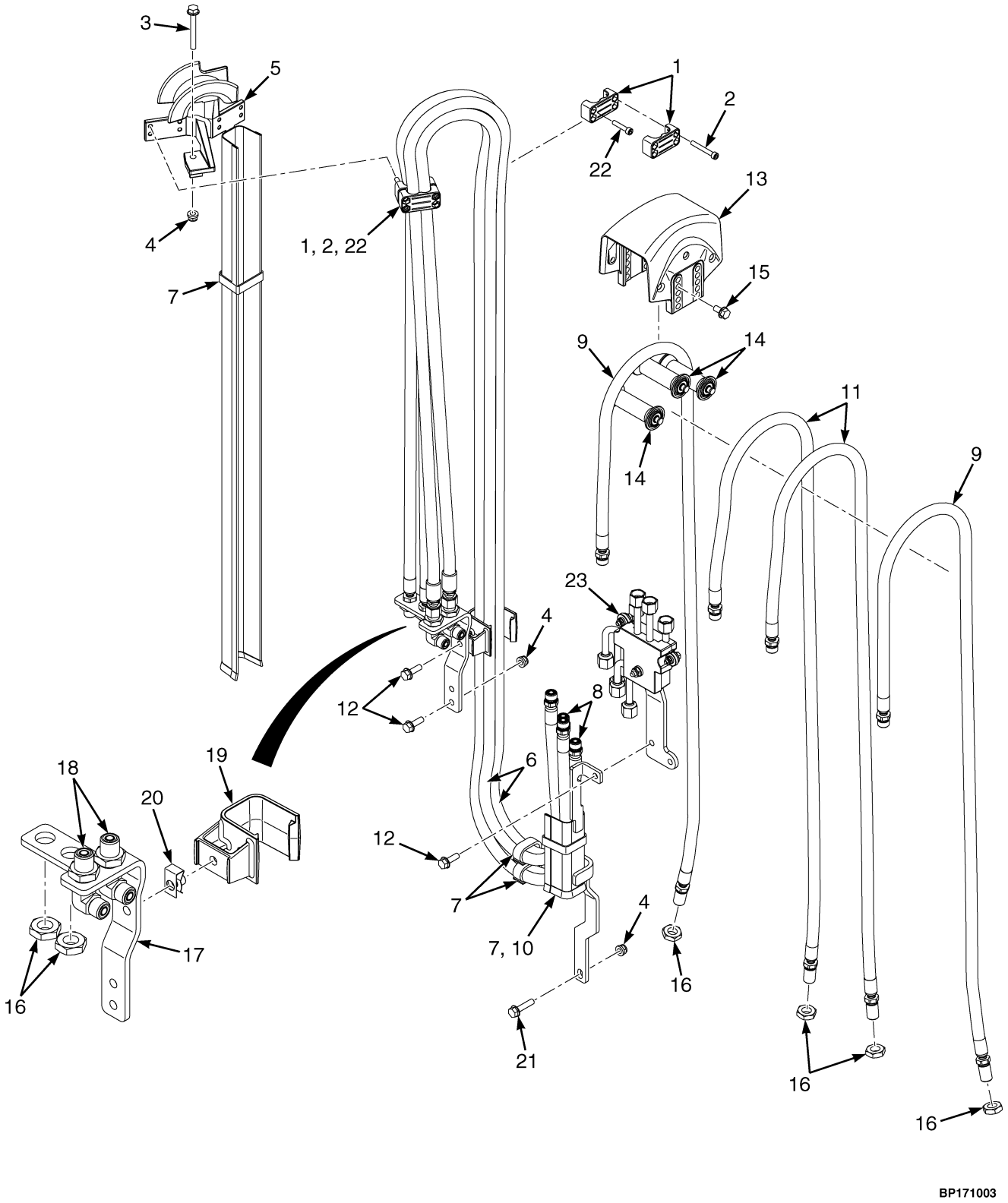

©2026 HYSTER COMPANY

HEADER HOSE AND ATTACHING PARTS

TWO STAGE FULL FREE-LIFT – H50A WITH 28X9 TIRES (→ 8/2025)

KEY:
A: 3 Function
B: 4 Function

ITEM	PART NO.	DESCRIPTION	QTY A	QTY B
1	1360386	Clamp (Double Hose)	2	4
2	1581843	Capscrew	4	4
3	4189066	Capscrew	1	1
4	4187690	Locknut	4	4
5	**b** 4196851	Bracket Wldmt (w/ Channel) (Lift Height 2750-3300mm)	1	1
5	**c** 4728300	Bracket Wldmt (w/ Channel) (Lift Height 2750-3300mm)	1	1
5	**b** 4196852	Bracket Wldmt (w/ Channel) (Lift Height 3400-3700mm)	1	1
5	**c** 4728301	Bracket Wldmt (w/ Channel) (Lift Height 3400-3700mm)	1	1
5	**b** 4196853	Bracket Wldmt (w/ Channel) (Lift Height 3800-4020mm)	1	1
5	**c** 4728302	Bracket Wldmt (w/ Channel) (Lift Height 3800-4020mm)	1	1
5	**b** 4196855	Bracket Wldmt (w/ Channel) (Lift Height 4520mm)	1	1
5	**c** 4728304	Bracket Wldmt (w/ Channel) (Lift Height 4520mm)	1	1
6	4710471	Header Hose (Lift Height 2750-3000mm)	..	2
6	4710473	Header Hose (Lift Height 3200mm)	..	2
6	4710474	Header Hose (Lift Height 3300mm)	..	2
6	4710475	Header Hose (Lift Height 3400mm)	..	2
6	4710476	Header Hose (Lift Height 3500mm)	..	2
6	4710477	Header Hose (Lift Height 3600mm)	..	2
6	4710478	Header Hose (Lift Height 3700mm)	..	2
6	4710479	Header Hose (Lift Height 3800mm)	..	2
6	4710482	Header Hose (Lift Height 4020mm)	..	2
6	4710487	Header Hose (Lift Height 4520mm)	..	2
6	**a** 4721309	Header Hose (Lift Height 4520mm) (Alternate Part)	..	1
6	4710491	Header Hose (Lift Height 4920mm)	..	2
6	**a** 4721313	Header Hose (Lift Height 4920mm) (Alternate Part)	..	1
6	4710498	Header Hose (Lift Height 5520mm)	..	2
6	**a** 4721320	Header Hose (Lift Height 5520mm) (Alternate Part)	..	1
7	4215659	Retainer	AR	AR
8	4710421	Header Hose (Lift Height 2750-3000mm)	2	2
8	4710423	Header Hose (Lift Height 3200mm)	2	2
8	4710424	Header Hose (Lift Height 3300mm)	2	2
8	4710425	Header Hose (Lift Height 3400mm)	2	2
8	4710426	Header Hose (Lift Height 3500mm)	2	2
8	4710427	Header Hose (Lift Height 3600mm)	2	2
8	4710428	Header Hose (Lift Height 3700mm)	2	2
8	4710429	Header Hose (Lift Height 3800mm)	2	2
8	4710432	Header Hose (Lift Height 4020mm)	2	2
8	4710437	Header Hose (Lift Height 4520mm)	2	2
8	**a** 4721259	Header Hose (Lift Height 4520mm) (Alternate Part)	1	1
8	4710441	Header Hose (Lift Height 4920mm)	2	2
8	**a** 4721263	Header Hose (Lift Height 4920mm) (Alternate Part)	1	1
8	4710448	Header Hose (Lift Height 5520mm)	2	2
8	**a** 4721270	Header Hose (Lift Height 5520mm) (Alternate Part)	1	1
9	4688329	Header Hose (Lift Height 2750-3000mm)	..	2
9	4688331	Header Hose (Lift Height 3200mm)	..	2

HEADER HOSE AND ATTACHING PARTS

TWO STAGE FULL FREE-LIFT – H50A WITH 28X9 TIRES (→ 8/2025)

KEY:
A: 3 Function
B: 4 Function

ITEM	PART NO.	DESCRIPTION	QTY A	QTY B
9	4688332	Header Hose (Lift Height 3300mm)	..	2
9	4688333	Header Hose (Lift Height 3400mm)	..	2
9	4688334	Header Hose (Lift Height 3500mm)	..	2
9	4688335	Header Hose (Lift Height 3600mm)	..	2
9	4688336	Header Hose (Lift Height 3700mm)	..	2
9	4688337	Header Hose (Lift Height 3800mm)	..	2
9	4688340	Header Hose (Lift Height 4020mm)	..	2
9	4688345	Header Hose (Lift Height 4520mm)	..	2
9	4688349	Header Hose (Lift Height 4920mm)	..	2
9	4688356	Header Hose (Lift Height 5520mm)	..	2
10	4279056	Bracket Wldmt (Lift Height 2750-4020mm)	1	1
10	4279057	Bracket Wldmt (Lift Height 4520-5520mm)	1	1
11	4688301	Header Hose (Lift Height 2750-3000mm)	2	2
11	4688303	Header Hose (Lift Height 3200mm)	2	2
11	4688304	Header Hose (Lift Height 3300mm)	2	2
11	4688305	Header Hose (Lift Height 3400mm)	2	2
11	4688306	Header Hose (Lift Height 3500mm)	2	2
11	4688307	Header Hose (Lift Height 3600mm)	2	2
11	4688308	Header Hose (Lift Height 3700mm)	2	2
11	4688309	Header Hose (Lift Height 3800mm)	2	2
11	4688312	Header Hose (Lift Height 4020mm)	2	2
11	4688317	Header Hose (Lift Height 4520mm)	2	2
11	4688321	Header Hose (Lift Height 4920mm)	2	2
11	4688328	Header Hose (Lift Height 5520mm)	2	2
12	4185429	Capscrew	5	5
13	4696052	Crosshead - Hose Guide	1	1
14	. . . . .	Roller	3	3
15	4223693	Capscrew	4	4
16	4187786	Nut	8	10
17	4249631	Bracket	1	1
18	1528579	Fitting	..	2
19	4260617	Molding - Trough Clamp	1	1
20	1398062	Nut (Fold Over)	1	1
21	4185431	Capscrew	1	1
22	1581742	Capscrew	2	4
23	. . . . .	Free Lift Tubes (☞Figure 18-18)	1	1

FOOTNOTES:

a Single twin line hose assembly
b → S/N R177V01662X
c S/N R177V01663X →

©2026 HYSTER COMPANY

NOTES

HEADER HOSE AND ATTACHING PARTS (FIGURE 18-16)

TWO STAGE FULL FREE-LIFT (8/2025 →)

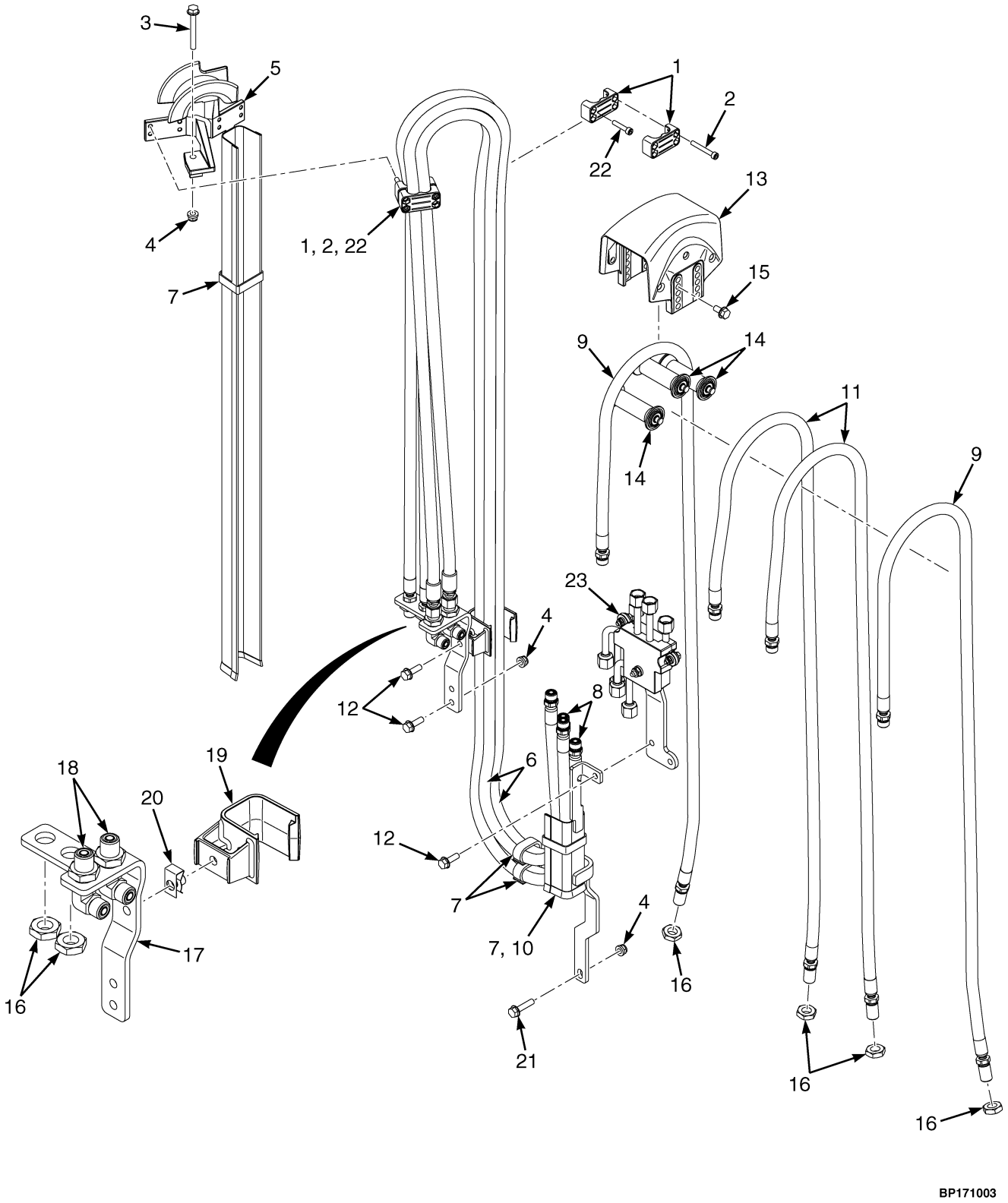

©2026 HYSTER COMPANY

HEADER HOSE AND ATTACHING PARTS

TWO STAGE FULL FREE-LIFT (8/2025 →)

KEY:
A: 3 Function
B: 4 Function

ITEM	PART NO.	DESCRIPTION	QTY A	QTY B
1	4702210	Clamp	2	4
2	1581843	Capscrew	4	4
3	4189066	Capscrew	1	1
4	4187690	Locknut	4	4
5	**a** 4196851	Bracket Wldmt (w/ Channel) (Lift Height 2750/3000-3300/3154mm)	1	1
5	**b** 4728300	Bracket Wldmt (w/ Channel) (Lift Height 2750/3000-3300/3154mm)	1	1
5	**a** 4196852	Bracket Wldmt (w/ Channel) (Lift Height 3400/3254-3700/3554mm)	1	1
5	**b** 4728301	Bracket Wldmt (w/ Channel) (Lift Height 3400/3254-3700/3554mm)	1	1
5	**a** 4196853	Bracket Wldmt (w/ Channel) (Lift Height 3800/3654 and 4020/3854mm)	1	1
5	**b** 4728302	Bracket Wldmt (w/ Channel) (Lift Height 3800/3654 and 4020/3854mm)	1	1
5	**a** 4196854	Bracket Wldmt (w/ Channel) (Lift Height 4120/3954mm)	1	1
5	**b** 4728303	Bracket Wldmt (w/ Channel) (Lift Height 4120/3954mm)	1	1
5	**a** 4196855	Bracket Wldmt (w/ Channel) (Lift Height 4520/4354 and 4620/4454mm)	1	1
5	**b** 4728304	Bracket Wldmt (w/ Channel) (Lift Height 4520/4354 and 4620/4454mm)	1	1
5	**a** 4196856	Bracket Wldmt (w/ Channel) (Lift Height 4920/4754 and 5120/4954mm)	1	1
5	**b** 4728305	Bracket Wldmt (w/ Channel) (Lift Height 4920/4754 and 5120/4954mm)	1	1
5	**a** 4196857	Bracket Wldmt (w/ Channel) (Lift Height 5520/5354mm)	1	1
5	**b** 4728306	Bracket Wldmt (w/ Channel) (Lift Height 5520/5354mm)	1	1
6	4721293	Header Hose (Lift Height 2750-3000/2604-2854mm)	..	1
6	4721294	Header Hose (Lift Height 3100/2954mm)	..	1
6	4721295	Header Hose (Lift Height 3200/3054mm)	..	1
6	4721296	Header Hose (Lift Height 3300/3154mm)	..	1
6	4721297	Header Hose (Lift Height 3400/3254mm)	..	1
6	4721298	Header Hose (Lift Height 3500/3354mm)	..	1
6	4721299	Header Hose (Lift Height 3600/3454mm)	..	1
6	4721300	Header Hose (Lift Height 3700/3554mm)	..	1
6	4721301	Header Hose (Lift Height 3800/3654mm)	..	1
6	4721304	Header Hose (Lift Height 4020/3854mm)	..	1
6	4721305	Header Hose (Lift Height 4120/3954mm)	..	1
6	4721309	Header Hose (Lift Height 4520/4354mm)	..	1
6	4721310	Header Hose (Lift Height 4620/4454mm)	..	1
6	4721313	Header Hose (Lift Height 4920/4754mm)	..	1
6	4721316	Header Hose (Lift Height 5120/4954mm)	..	1
6	4721320	Header Hose (Lift Height 5520/5354mm)	..	1
7	4215659	Retainer	AR	AR
8	4721243	Header Hose (Lift Height 2750-3000/2604-2854mm)	1	1
8	4721244	Header Hose (Lift Height 3100/2954mm)	1	1
8	4721245	Header Hose (Lift Height 3200/3054mm)	1	1
8	4721246	Header Hose (Lift Height 3300/3154mm)	1	1
8	4721247	Header Hose (Lift Height 3400/3254mm)	1	1
8	4721248	Header Hose (Lift Height 3500/3354mm)	1	1
8	4721249	Header Hose (Lift Height 3600/3454mm)	1	1
8	4721250	Header Hose (Lift Height 3700/3554mm)	1	1
8	4721251	Header Hose (Lift Height 3800/3654mm)	1	1
8	4721254	Header Hose (Lift Height 4020/3854mm)	1	1

©2026 HYSTER COMPANY

HEADER HOSE AND ATTACHING PARTS

TWO STAGE FULL FREE-LIFT (8/2025 →)

KEY:
A: 3 Function
B: 4 Function

ITEM	PART NO.	DESCRIPTION	QTY A	QTY B
8	4721255	Header Hose (Lift Height 4120/3954mm)	1	1
8	4721259	Header Hose (Lift Height 4520/4354mm)	1	1
8	4721260	Header Hose (Lift Height 4620/4454mm)	1	1
8	4721263	Header Hose (Lift Height 4920/4754mm)	1	1
8	4721266	Header Hose (Lift Height 5120/4954mm)	1	1
8	4721270	Header Hose (Lift Height 5520/5354mm)	1	1
9	4688217	Header Hose (Lift Height 2750-3000/2604-2854mm)	..	2
9	4688218	Header Hose (Lift Height 3100/2954mm)	..	2
9	4688219	Header Hose (Lift Height 3200/3054mm)	..	2
9	4688220	Header Hose (Lift Height 3300/3154mm)	..	2
9	4688221	Header Hose (Lift Height 3400/3254mm)	..	2
9	4688222	Header Hose (Lift Height 3500/3354mm)	..	2
9	4688223	Header Hose (Lift Height 3600/3454mm)	..	2
9	4688224	Header Hose (Lift Height 3700/3554mm)	..	2
9	4688225	Header Hose (Lift Height 3800/3654mm)	..	2
9	4688228	Header Hose (Lift Height 4020/3854mm)	..	2
9	4688229	Header Hose (Lift Height 4120/3954mm)	..	2
9	4688233	Header Hose (Lift Height 4520/4354mm)	..	2
9	4688234	Header Hose (Lift Height 4620/4454mm)	..	2
9	4688237	Header Hose (Lift Height 4920/4754mm)	..	2
9	4688240	Header Hose (Lift Height 5120/4954mm)	..	2
9	4688244	Header Hose (Lift Height 5520/5354mm)	..	2
10	4279056	Bracket Wldmt (Lift Height 2750/3000-4120/3954mm)	1	1
10	4279057	Bracket Wldmt (Lift Height 4520/4354-5520/5354mm)	1	1
11	4688184	Header Hose (Lift Height 2750-3000/2604-2854mm)	2	2
11	4688185	Header Hose (Lift Height 3100/2954mm)	2	2
11	4688186	Header Hose (Lift Height 3200/3054mm)	2	2
11	4688187	Header Hose (Lift Height 3300/3154mm)	2	2
11	4688188	Header Hose (Lift Height 3400/3254mm)	2	2
11	4688189	Header Hose (Lift Height 3500/3354mm)	2	2
11	4688190	Header Hose (Lift Height 3600/3454mm)	2	2
11	4688191	Header Hose (Lift Height 3700/3554mm)	2	2
11	4688192	Header Hose (Lift Height 3800/3654mm)	2	2
11	4688195	Header Hose (Lift Height 4020/3854mm)	2	2
11	4688196	Header Hose (Lift Height 4120/3954mm)	2	2
11	4688200	Header Hose (Lift Height 4520/4354mm)	2	2
11	4688201	Header Hose (Lift Height 4620/4454mm)	2	2
11	4688204	Header Hose (Lift Height 4920/4754mm)	2	2
11	4688207	Header Hose (Lift Height 5120/4954mm)	2	2
11	4688211	Header Hose (Lift Height 5520/5354mm)	2	2
12	4185429	Capscrew	5	5
13	4696052	Crosshead - Hose Guide	1	1
14	. . . . .	Roller	3	3
15	4223693	Capscrew	4	4
16	4187786	Nut	8	10

See Service Manual for service procedures.
©2026 HYSTER COMPANY

HEADER HOSE AND ATTACHING PARTS

TWO STAGE FULL FREE-LIFT (8/2025 →)

KEY:
A: 3 Function
B: 4 Function

ITEM	PART NO.	DESCRIPTION	QTY A	QTY B
17	4249631	Bracket	1	1
18	1528579	Fitting	..	2
19	4260617	Molding - Trough Clamp	1	1
20	1398062	Nut (Fold Over)	1	1
21	4185431	Capscrew	1	1
22	1581742	Capscrew	2	4
23	. . . . .	Free Lift Tubes (☞Figure 18-18)	1	1

FOOTNOTES:

a → S/N R177V01662X

b S/N R177V01663X →

HEADER HOSE AND ATTACHING PARTS (FIGURE 18-17)

TWO STAGE FULL FREE-LIFT — H50A WITH 28X9 TIRES (8/2025 →)

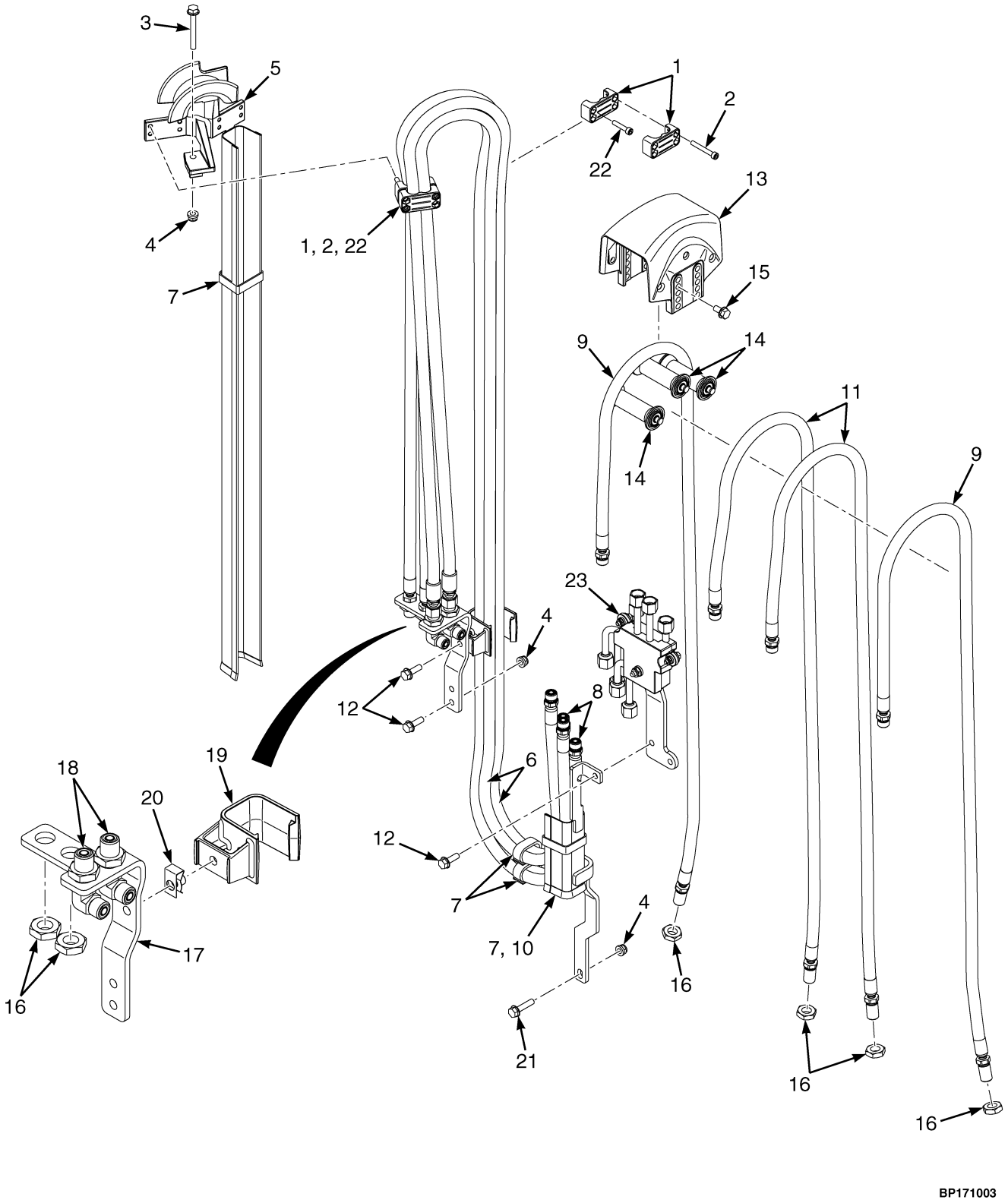

©2026 HYSTER COMPANY

HEADER HOSE AND ATTACHING PARTS

TWO STAGE FULL FREE-LIFT – H50A WITH 28X9 TIRES (8/2025 →)

KEY:
A: 3 Function
B: 4 Function

ITEM	PART NO.	DESCRIPTION	QTY A	QTY B
1	1360386	Clamp (Double Hose)	2	4
2	1581843	Capscrew	4	4
3	4189066	Capscrew	1	1
4	4187690	Locknut	4	4
5	**a** 4196851	Bracket Wldmt (w/ Channel) (Lift Height 2750-3300mm)	1	1
5	**b** 4728300	Bracket Wldmt (w/ Channel) (Lift Height 2750-3300mm)	1	1
5	**a** 4196852	Bracket Wldmt (w/ Channel) (Lift Height 3400-3700mm)	1	1
5	**b** 4728301	Bracket Wldmt (w/ Channel) (Lift Height 3400-3700mm)	1	1
5	**a** 4196853	Bracket Wldmt (w/ Channel) (Lift Height 3800-4020mm)	1	1
5	**b** 4728302	Bracket Wldmt (w/ Channel) (Lift Height 3800-4020mm)	1	1
5	**a** 4196855	Bracket Wldmt (w/ Channel) (Lift Height 4520mm)	1	1
5	**b** 4728304	Bracket Wldmt (w/ Channel) (Lift Height 4520mm)	1	1
6	4721293	Header Hose (Lift Height 2750-3000mm)	..	1
6	4721295	Header Hose (Lift Height 3200mm)	..	1
6	4721296	Header Hose (Lift Height 3300mm)	..	1
6	4721297	Header Hose (Lift Height 3400mm)	..	1
6	4721298	Header Hose (Lift Height 3500mm)	..	1
6	4721299	Header Hose (Lift Height 3600mm)	..	1
6	4721300	Header Hose (Lift Height 3700mm)	..	1
6	4721301	Header Hose (Lift Height 3800mm)	..	1
6	4721304	Header Hose (Lift Height 4020mm)	..	1
6	4721309	Header Hose (Lift Height 4520mm)	..	1
6	4721313	Header Hose (Lift Height 4920mm)	..	1
6	4721320	Header Hose (Lift Height 5520mm)	..	1
7	4215659	Retainer	AR	AR
8	4721243	Header Hose (Lift Height 2750-3000mm)	1	1
8	4721245	Header Hose (Lift Height 3200mm)	1	1
8	4721246	Header Hose (Lift Height 3300mm)	1	1
8	4721247	Header Hose (Lift Height 3400mm)	1	1
8	4721248	Header Hose (Lift Height 3500mm)	1	1
8	4721249	Header Hose (Lift Height 3600mm)	1	1
8	4721250	Header Hose (Lift Height 3700mm)	1	1
8	4721251	Header Hose (Lift Height 3800mm)	1	1
8	4721254	Header Hose (Lift Height 4020mm)	1	1
8	4721259	Header Hose (Lift Height 4520mm)	1	1
8	4721263	Header Hose (Lift Height 4920mm)	1	1
8	4721270	Header Hose (Lift Height 5520mm)	1	1
9	4688329	Header Hose (Lift Height 2750-3000mm)	..	2
9	4688331	Header Hose (Lift Height 3200mm)	..	2
9	4688332	Header Hose (Lift Height 3300mm)	..	2
9	4688333	Header Hose (Lift Height 3400mm)	..	2
9	4688334	Header Hose (Lift Height 3500mm)	..	2
9	4688335	Header Hose (Lift Height 3600mm)	..	2
9	4688336	Header Hose (Lift Height 3700mm)	..	2
9	4688337	Header Hose (Lift Height 3800mm)	..	2

©2026 HYSTER COMPANY

HEADER HOSE AND ATTACHING PARTS

TWO STAGE FULL FREE-LIFT – H50A WITH 28X9 TIRES (8/2025 →)

KEY:
A: 3 Function
B: 4 Function

ITEM	PART NO.	DESCRIPTION	QTY A	QTY B
9	4688340	Header Hose (Lift Height 4020mm)	..	2
9	4688345	Header Hose (Lift Height 4520mm)	..	2
9	4688349	Header Hose (Lift Height 4920mm)	..	2
9	4688356	Header Hose (Lift Height 5520mm)	..	2
10	4279056	Bracket Wldmt (Lift Height 2750-4020mm)	1	1
10	4279057	Bracket Wldmt (Lift Height 4520-5520mm)	1	1
11	4688301	Header Hose (Lift Height 2750-3000mm)	2	2
11	4688303	Header Hose (Lift Height 3200mm)	2	2
11	4688304	Header Hose (Lift Height 3300mm)	2	2
11	4688305	Header Hose (Lift Height 3400mm)	2	2
11	4688306	Header Hose (Lift Height 3500mm)	2	2
11	4688307	Header Hose (Lift Height 3600mm)	2	2
11	4688308	Header Hose (Lift Height 3700mm)	2	2
11	4688309	Header Hose (Lift Height 3800mm)	2	2
11	4688312	Header Hose (Lift Height 4020mm)	2	2
11	4688317	Header Hose (Lift Height 4520mm)	2	2
11	4688321	Header Hose (Lift Height 4920mm)	2	2
11	4688328	Header Hose (Lift Height 5520mm)	2	2
12	4185429	Capscrew	5	5
13	4696052	Crosshead - Hose Guide	1	1
14	. . . . .	Roller	3	3
15	4223693	Capscrew	4	4
16	4187786	Nut	8	10
17	4249631	Bracket	1	1
18	1528579	Fitting	..	2
19	4260617	Molding - Trough Clamp	1	1
20	1398062	Nut (Fold Over)	1	1
21	4185431	Capscrew	1	1
22	1581742	Capscrew	2	4
23	. . . . .	Free Lift Tubes (☞Figure 18-18)	1	1

FOOTNOTES:

a → S/N R177V01662X

b S/N R177V01663X →

©2026 HYSTER COMPANY

FREE LIFT TUBES (FIGURE 18-18)

TWO STAGE FULL FREE-LIFT (→ 8/2025)

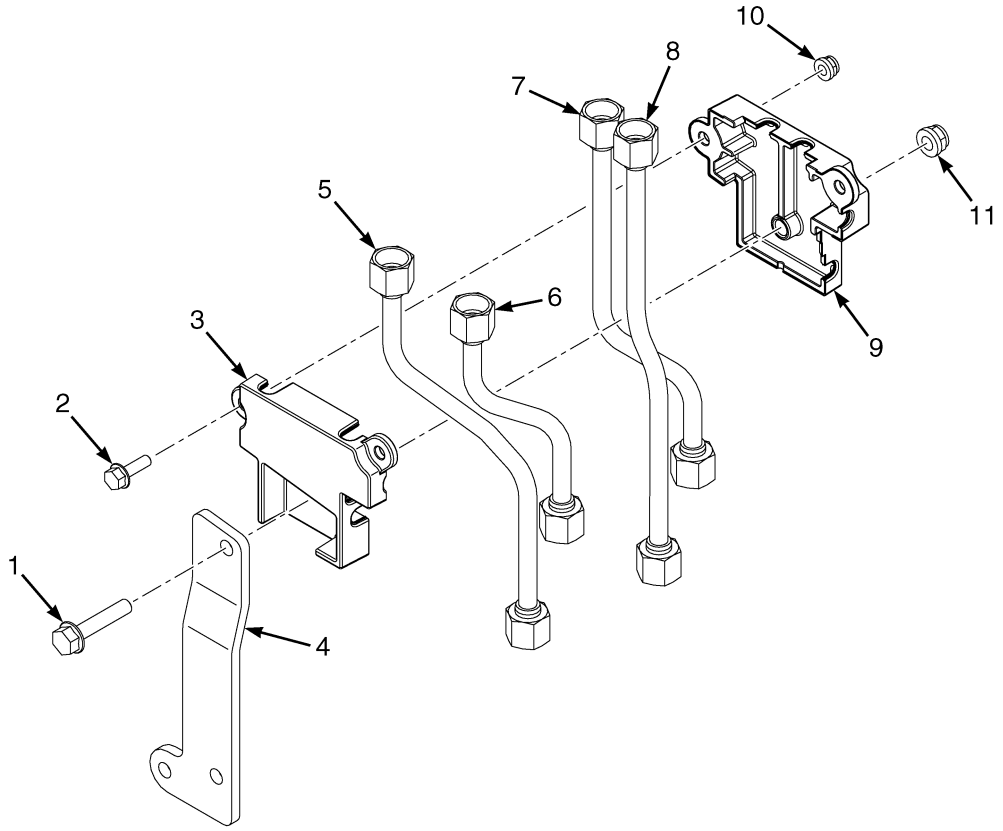

BP171035

ITEM	PART NO.	DESCRIPTION	QTY
	4223686	Tube Assy (3 Function) (Lift Height 2954-3454mm)	1
	4223689	Tube Assy (4 Function) (Lift Height 2954-3454mm)	1
	4336714	Tube Assy (3 Function) (Lift Height 4454-5520mm)	1
	4336715	Tube Assy (4 Function) (Lift Height 4454-5520mm)	1
1	4185432	Capscrew	1
1	4133281	Capscrew (Alternate Part)	1
2	4188201	Capscrew	2
3	4700251	Clamp	1
4	4223375	Bracket - Free Lift Tube	1
5	4688481	Tube Assy (LH) (4F)	1
5	4721253	Tube Assy (LH)(4F) (Lift Height 4454-5520mm)	1
6	4688482	Tube Assy (RH) (4F)	1
7	4688479	Tube Assy (LH) (3F)	1
7	4721252	Tube Assy (LH)(3F) (Lift Height 4454-5520mm)	1
8	4688480	Tube Assy (RH) (3F)	1
9	4700252	Clamp	1
10	4187689	Locknut	2
11	4187690	Locknut	1

FREE LIFT TUBES (FIGURE 18-19)

TWO STAGE FULL FREE-LIFT (8/2025 →)

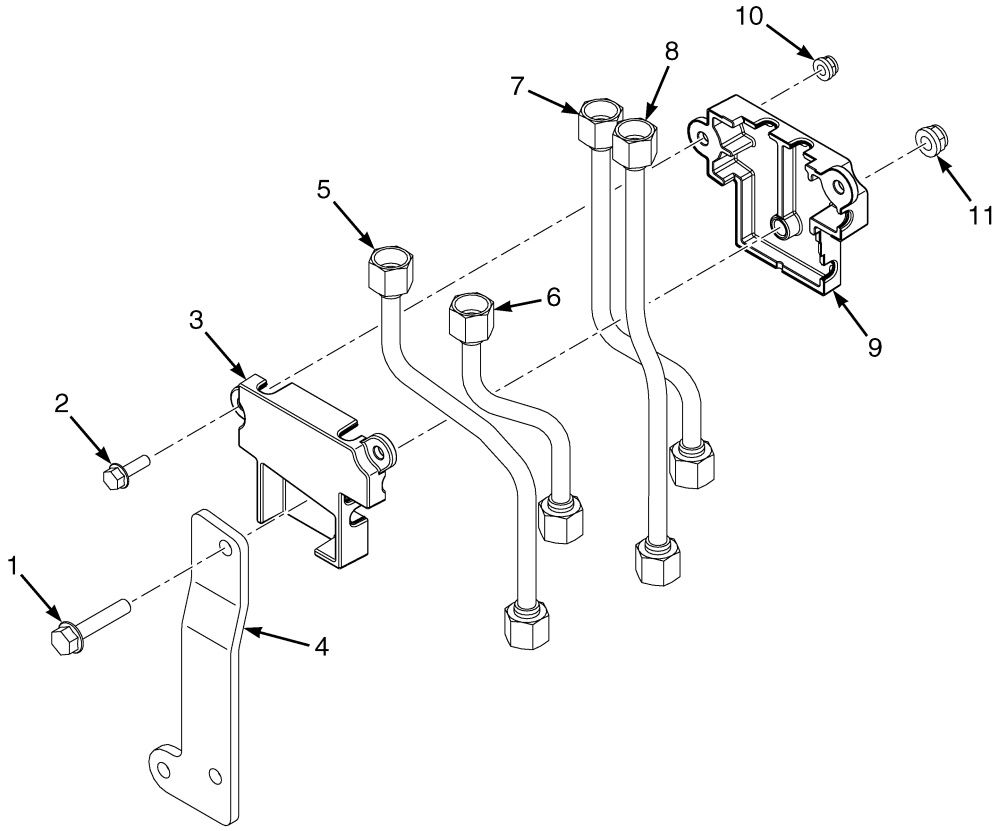

ITEM	PART NO.	DESCRIPTION	QTY
	4336714	Tube Assy (3 Function)	1
	4336715	Tube Assy (4 Function)	1
1	4133281	Capscrew	1
2	4188201	Capscrew	2
3	4700251	Clamp	1
4	4223375	Bracket - Free Lift Tube	1
5	4721253	Tube Assy (LH)(4F)	1
6	4688482	Tube Assy (RH) (4F)	1
7	4721252	Tube Assy (LH)(3F)	1
8	4688480	Tube Assy (RH) (3F)	1
9	4700252	Clamp	1
10	4187689	Locknut	2
11	4187690	Locknut	1

©2026 HYSTER COMPANY

19 MAST-FOUR STAGE FULL FREE-LIFT

SECTION 19
MAST-FOUR STAGE FULL FREE-LIFT

DESCRIPTION	PAGE
CARRIAGE	
INTEGRAL SIDE-SHIFT - FOUR STAGE FULL FREE-LIFT	19-24
STANDARD - FOUR STAGE FULL FREE-LIFT	19-22
FREE-LIFT CYLINDER	
FOUR STAGE FULL FREE-LIFT	19-20
HEADER HOSE	
FOUR STAGE FULL FREE-LIFT (→ 6/2023)	19-28
FOUR STAGE FULL FREE-LIFT (6/2023 →)	19-30
MAIN LIFT CYLINDER ASSEMBLY	
FOUR STAGE FULL FREE-LIFT - LEFT HAND	19-16
FOUR STAGE FULL FREE-LIFT - RIGHT HAND	19-18
MAST ASSEMBLY	
FOUR STAGE FULL FREE-LIFT - PAGE 1 OF 3	19-2
FOUR STAGE FULL FREE-LIFT - PAGE 2 OF 3	19-6
FOUR STAGE FULL FREE-LIFT - PAGE 3 OF 3 (→ 9/2023)	19-8
FOUR STAGE FULL FREE-LIFT - PAGE 3 OF 3 (9/2023 →)	19-12

©2026 HYSTER COMPANY

MAST ASSEMBLY (FIGURE 19-1)
FOUR STAGE FULL FREE-LIFT — PAGE 1 OF 3

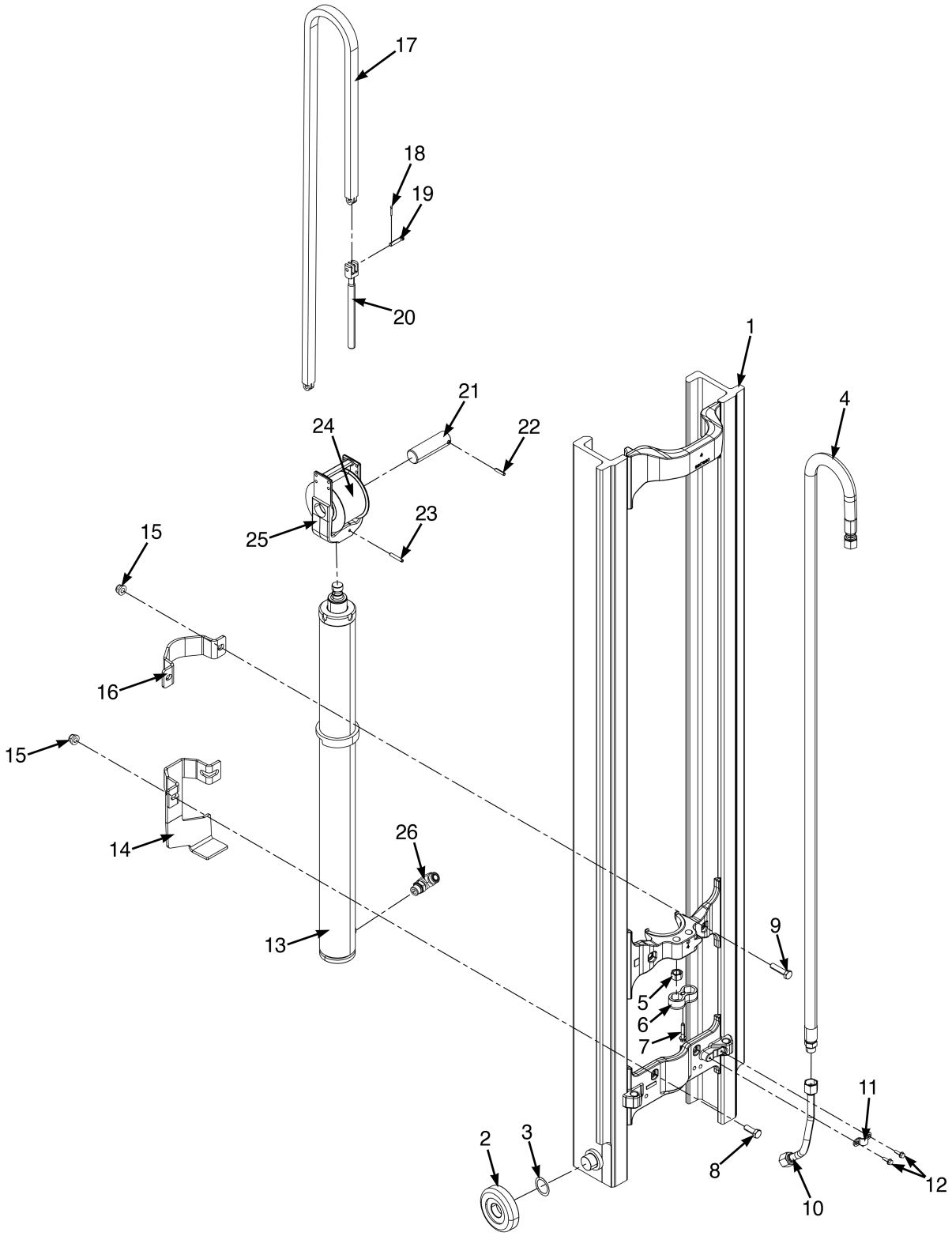

©2026 HYSTER COMPANY

MAST ASSEMBLY

FOUR STAGE FULL FREE-LIFT – PAGE 1 OF 3

ITEM	PART NO.	DESCRIPTION	QTY
	4694222	Mast Assy (Lift Height 6058mm)	1
	4694223	Mast Assy (Lift Height 6362mm)	1
	4694217	Mast Assy (Lift Height 6669mm)	1
	4694224	Mast Assy (Lift Height 6970mm)	1
	4694241	Mast Assy (Lift Height 6220mm)	1
1	4240805	Inner Mast (Lift Height 6058mm)	1
1	4240806	Inner Mast (Lift Height 6362mm)	1
1	4240807	Inner Mast (Lift Height 6669mm)	1
1	4240808	Inner Mast (Lift Height 6970mm)	1
1	4240807	Inner Mast (Lift Height 6220mm)	1
1	4231443	Stubshaft	2
2	4249506	Load Roller	2
2	4249505	Load Roller (Optional)	2
3	129387	Shim (0.020 in.)	AR
3	4263698	Shim (0.762 in.) (Optional)	AR
4	4693809	Hose Assy (High Pressure) (Lift Height 6058mm)	1
4	4693810	Hose Assy (High Pressure) (Lift Height 6362mm)	1
4	4693811	Hose Assy (High Pressure) (Lift Height 6669mm)	1
4	4693812	Hose Assy (High Pressure) (Lift Height 6970mm)	1
4	4693811	Hose Assy (High Pressure) (Lift Height 6220mm)	1
5	4029443	Nut , Castle	2
6	4175491	Restraint - Chain Anchor nut, double	1
7	4133281	Capscrew	1
8	1596404	Capscrew	2
9	1581827	Capscrew	2
10	4689824	Tube Assy	1
11	4240903	Bracket	1
12	4188201	Capscrew	2
13	4690419	Free Lift Cylinder (Lift Height 6058mm)	1
13	4690420	Free Lift Cylinder (Lift Height 6362mm)	1
13	4690421	Free Lift Cylinder (Lift Height 6669mm)	1
13	4690422	Free Lift Cylinder (Lift Height 6970mm)	1
13	4672902	Free Lift Cylinder (Lift Height 6220mm)	1
14	4335234	Clamp	1
15	4187692	Locknut	4
16	4057611	Clamp	1
17	4250821	Leaf Chain - Fixed Length (Lift Height 6058mm)	2
17	4250824	Leaf Chain - Fixed Length (Lift Height 6362mm)	2
17	4250827	Leaf Chain - Fixed Length (Lift Height 6669mm)	2
17	4250829	Leaf Chain - Fixed Length (Lift Height 6970mm)	2
17	4250826	Leaf Chain - Fixed Length (Lift Height 6220mm)	2
18	15222	Cotter Pin	2
19	4242899	Pin	2
20	4253178	Chain Anchor	2
21	4325657	Pin	1
22	302465	Roll Pin	1
23	302468	Roll Pin	1
24	4223287	Chain Sheave	1
25	4249630	Crosshead	1
26	**a** 4615307	Flow Valve	1

MAST ASSEMBLY

FOUR STAGE FULL FREE-LIFT – PAGE 1 OF 3

ITEM	PART NO.	DESCRIPTION	QTY
26	**b** 1482177	Valve	1

FOOTNOTES:

a → 9/2023

b 9/2023 →

©2026 HYSTER COMPANY

NOTES

MAST ASSEMBLY (FIGURE 19-2)
FOUR STAGE FULL FREE-LIFT — PAGE 2 OF 3

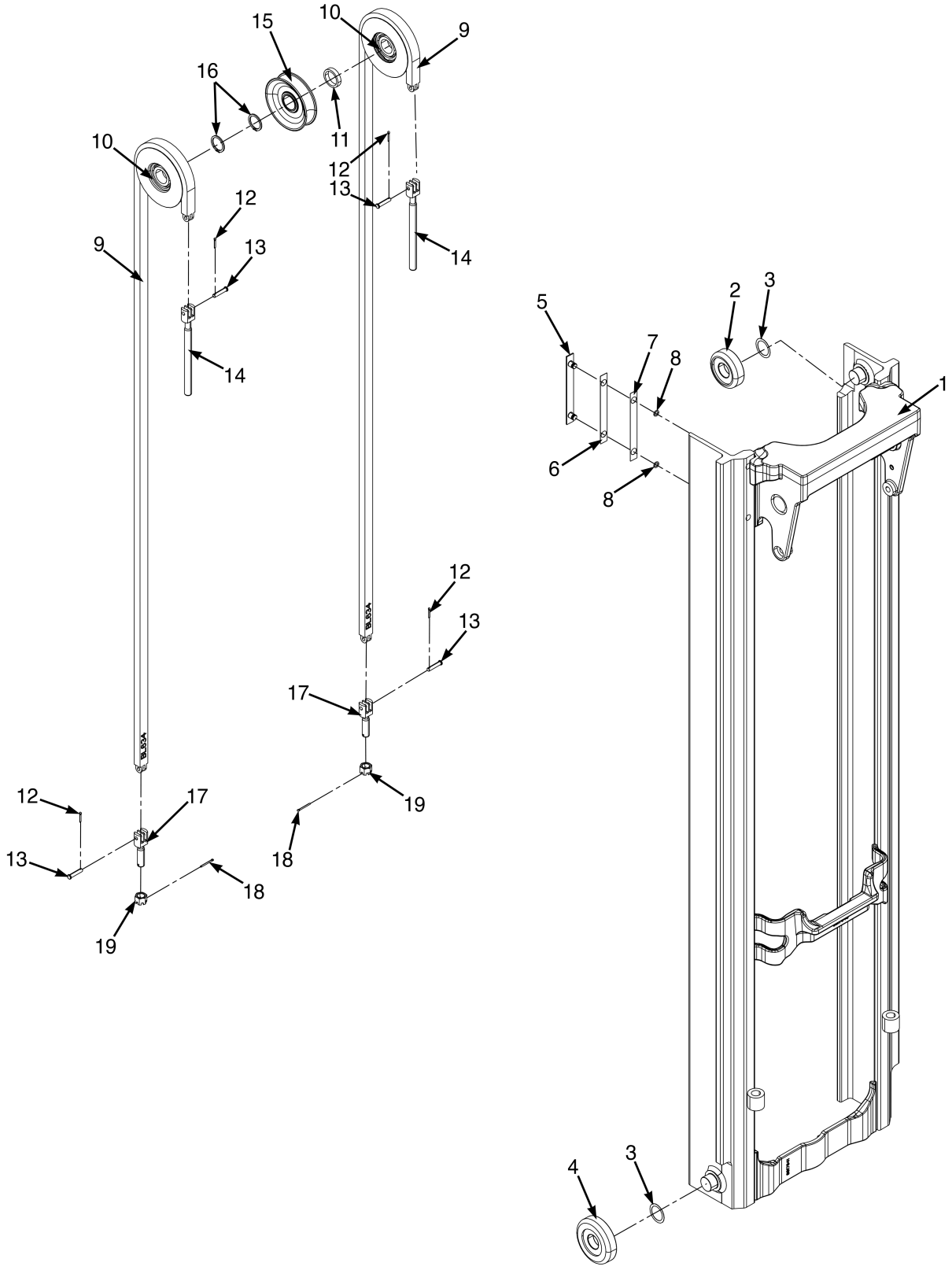

©2026 HYSTER COMPANY

MAST ASSEMBLY

FOUR STAGE FULL FREE-LIFT – PAGE 2 OF 3

ITEM	PART NO.	DESCRIPTION	QTY
	4694222	Mast Assy (Lift Height 6058mm)	1
	4694223	Mast Assy (Lift Height 6362mm)	1
	4694217	Mast Assy (Lift Height 6669mm)	1
	4694224	Mast Assy (Lift Height 6970mm)	1
	4694241	Mast Assy (Lift Height 6220mm)	1
1	4240705	Intermediate Mast (Lift Height 6058mm)	1
1	4240706	Intermediate Mast (Lift Height 6362mm)	1
1	4240707	Intermediate Mast (Lift Height 6669mm)	1
1	4240708	Intermediate Mast (Lift Height 6970mm)	1
1	4240707	Intermediate Mast (Lift Height 6220mm)	1
1	4231443	Stubshaft	2
2	4249502	Load Roller	1
2	4249501	Load Roller (Optional)	1
3	129387	Shim (0.020 in.)	AR
3	4263698	Shim (0.762 in.) (Optional)	AR
4	4249506	Load Roller	1
4	4249505	Load Roller (Optional)	1
5	4253173	Wear Strip	2
6	4253175	Shim	2
7	4253176	Shim	2
8	104506	O-Ring	4
9	4250829	Leaf Chain - Fixed Length (Lift Height 6058mm)	2
9	4250832	Leaf Chain - Fixed Length (Lift Height 6362mm)	2
9	4250834	Leaf Chain - Fixed Length (Lift Height 6669mm)	2
9	4250837	Leaf Chain - Fixed Length (Lift Height 6970mm)	2
9	4250834	Leaf Chain - Fixed Length (Lift Height 6220mm)	2
10	4240555	Chain Sheave (Main Lift)	2
11	4244113	Spacer	1
12	15222	Cotter Pin	4
13	4242899	Pin	4
14	4253178	Chain Anchor	2
15	4325658	Hose Sheave (Free Lift Supply)	1
16	304526	Snap Ring	2
17	4253177	Chain Anchor	2
18	~~2056815~~		
	15224	Cotter Pin	2
19	4219867	Nut , Castle	2

©2026 HYSTER COMPANY

MAST ASSEMBLY (FIGURE 19-3)

FOUR STAGE FULL FREE-LIFT — PAGE 3 OF 3 (→ 9/2023)

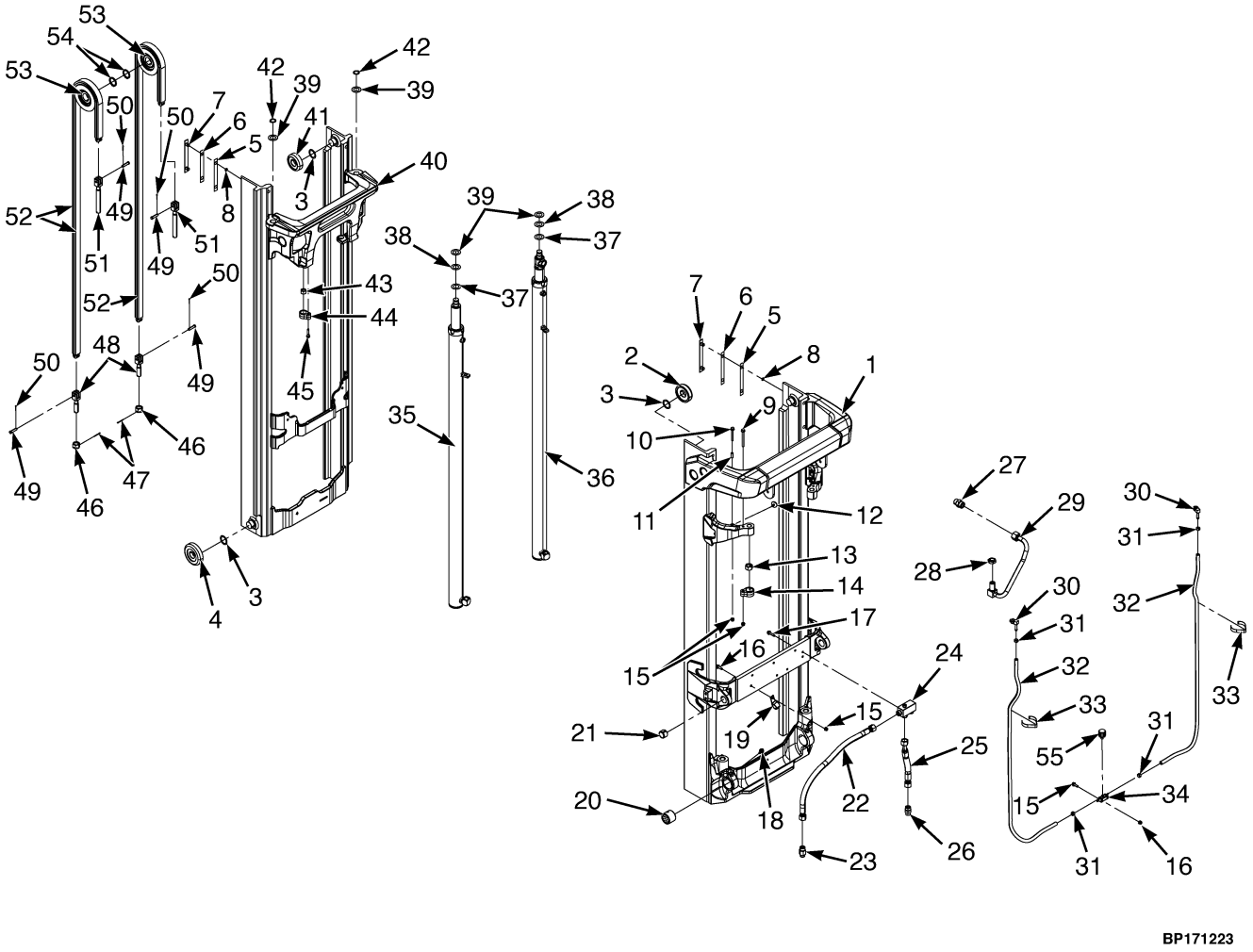

©2026 HYSTER COMPANY

MAST ASSEMBLY

FOUR STAGE FULL FREE-LIFT – PAGE 3 OF 3 (→ 9/2023)

ITEM	PART NO.	DESCRIPTION	QTY
	4694222	Mast Assy (Lift Height 6058mm)	1
	4694223	Mast Assy (Lift Height 6362mm)	1
	4694217	Mast Assy (Lift Height 6669mm)	1
	4694224	Mast Assy (Lift Height 6970mm)	1
	4694241	Mast Assy (Lift Height 6220mm)	1
1	4240505	Outer Mast (Lift Height 6058mm)	1
1	4240506	Outer Mast (Lift Height 6362mm)	1
1	4240507	Outer Mast (Lift Height 6669mm)	1
1	4240508	Outer Mast (Lift Height 6970mm)	1
1	4240507	Outer Mast (Lift Height 6220mm)	1
1	4231443	Stubshaft	2
2	4249502	Load Roller	2
2	4249501	Load Roller (Optional)	2
3	129387	Shim (0.020 in.)	AR
3	4263698	Shim (0.762 in.) (Optional)	AR
4	4249506	Load Roller	2
4	4249505	Load Roller (Optional)	2
5	4253175	Shim	4
6	4253176	Shim	4
7	4253173	Wear Strip	4
8	104506	O-Ring	8
9	4082846	Capscrew	2
10	4189066	Capscrew	2
11	~~4309896~~		
	4369706	Spacer	2
12	4275100	Rubber Pad	2
13	292620	Nut	2
14	4240554	Restraint (Chain Anchor)	2
15	4187690	Locknut	7
16	4185429	Capscrew	3
17	4185431	Capscrew	2
18	4269502	Capscrew (Lube)	2
18	16010	Grease Fitting	1
19	1310611	Clamp	1
20	4033414	Bushing	2
21	300982	Bushing	2
22	2102881	Hose Assy	1
23	1550159	Velocity Fuse	1
24	4334000	Manifold	1
25	4720435	Hose Assy	1
26	1486749	Fitting	1
27	1473888	Fitting	1
27	~~1495115~~		
	280154	O-Ring	1
28	~~6996710~~		
	1528603	Locknut , Bulkhead (ORFS/T - 1-14)	1
29	4690127	Tube Assy	1
30	17221	Fitting	2
30	16483	O-Ring	1
31	353198	Clamp	4

©2026 HYSTER COMPANY

MAST ASSEMBLY

FOUR STAGE FULL FREE-LIFT – PAGE 3 OF 3 (→ 9/2023)

ITEM	PART NO.	DESCRIPTION	QTY
32	4693822	Hose (Lift Height 6058mm)	2
32	4693823	Hose (Lift Height 6362mm)	2
32	4693824	Hose (Lift Height 6669mm)	2
32	4693825	Hose (Lift Height 6970mm)	2
32	4693824	Hose (Lift Height 6220mm)	2
33	4240558	Retainer	4
33	4233556	Hose Clamp (Alternate Part)	4
34	4720171	Tank (Drain Back Collection)	1
35	4689930	Cylinder Assy (LH) (Lift Height 6058mm)	1
35	4689931	Cylinder Assy (LH) (Lift Height 6362mm)	1
35	4689932	Cylinder Assy (LH) (Lift Height 6669mm)	1
35	4689933	Cylinder Assy (LH) (Lift Height 6970mm)	1
35	4689948	Cylinder Assy (LH) (Lift Height 6220mm)	1
36	4690984	Cylinder Assy (RH) (Lift Height 6058mm)	1
36	4690985	Cylinder Assy (RH) (Lift Height 6362mm)	1
36	4690986	Cylinder Assy (RH) (Lift Height 6669mm)	1
36	4690987	Cylinder Assy (RH) (Lift Height 6970mm)	1
36	4691001	Cylinder Assy (RH) (Lift Height 6220mm)	1
37	4242898	Shim	2
38	4242897	Shim	2
39	1333382	Washer (Mast Shim) (0.060 in.)	4
40	4240605	Intermediate Mast (Lift Height 6058mm)	1
40	4240606	Intermediate Mast (Lift Height 6362mm)	1
40	4240607	Intermediate Mast (Lift Height 6669mm)	1
40	4240608	Intermediate Mast (Lift Height 6970mm)	1
40	4240607	Intermediate Mast (Lift Height 6220mm)	1
40	4231443	Stubshaft	2
41	4249499	Load Roller	2
41	4270149	Load Roller (Optional)	2
42	131358	Snap Ring	2
43	4029443	Nut , Castle	2
44	4145952	Restraint	2
45	4133281	Capscrew	2
46	4219868	Nut , Castle	2
47	15234	Cotter Pin	2
48	4240561	Chain Anchor	2
49	4242899	Pin	4
50	15232	Cotter Pin	4
51	4240562	Chain Anchor	2
52	4077646	Leaf Chain - Fixed Length (Lift Height 6058mm)	2
52	4077648	Leaf Chain - Fixed Length (Lift Height 6362mm)	2
52	4077650	Leaf Chain - Fixed Length (Lift Height 6669mm)	2
52	4077653	Leaf Chain - Fixed Length (Lift Height 6970mm)	2
52	4077650	Leaf Chain - Fixed Length (Lift Height 6220mm)	2
53	4345375	Chain Sheave	2
54	304527	Snap Ring	2
55	4348957	Breather Cap	1

©2026 HYSTER COMPANY

NOTES

MAST ASSEMBLY (FIGURE 19-4)

FOUR STAGE FULL FREE-LIFT — PAGE 3 OF 3 (9/2023 →)

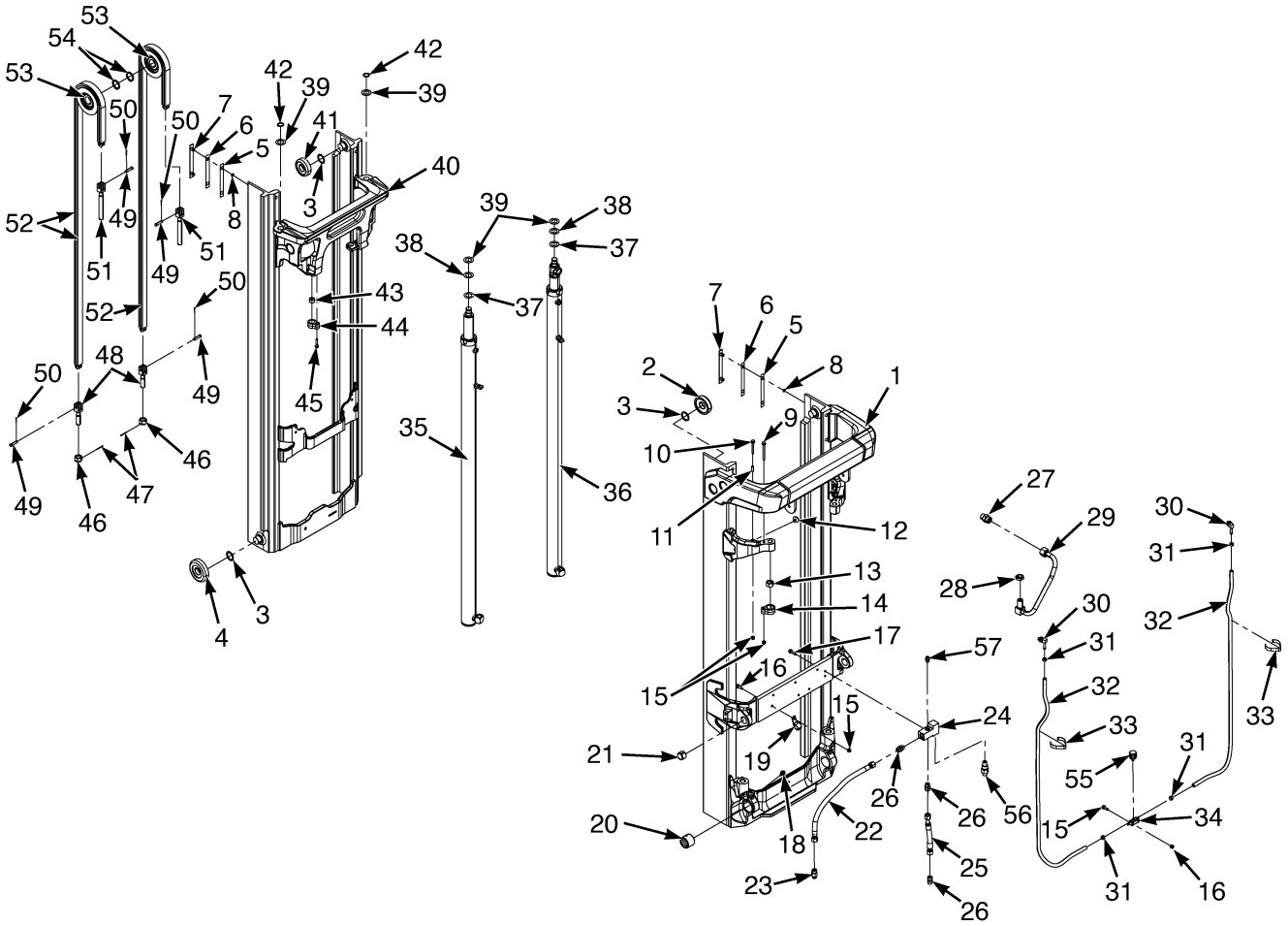

BP171276

©2026 HYSTER COMPANY

MAST ASSEMBLY

FOUR STAGE FULL FREE-LIFT – PAGE 3 OF 3 (9/2023 →)

ITEM	PART NO.	DESCRIPTION	QTY
	4694222	Mast Assy (Lift Height 6058mm)	1
	4694223	Mast Assy (Lift Height 6362mm)	1
	4694217	Mast Assy (Lift Height 6669mm)	1
	4694224	Mast Assy (Lift Height 6970mm)	1
	4694241	Mast Assy (Lift Height 6220mm)	1
1	4240505	Outer Mast (Lift Height 6058mm)	1
1	4240506	Outer Mast (Lift Height 6362mm)	1
1	4240507	Outer Mast (Lift Height 6669mm)	1
1	4240508	Outer Mast (Lift Height 6970mm)	1
1	4240507	Outer Mast (Lift Height 6220mm)	1
1	4231443	Stubshaft	2
2	4249502	Load Roller	2
2	4249501	Load Roller (Optional)	2
3	129387	Shim (0.020 in.)	AR
3	4263698	Shim (0.762 in.) (Optional)	AR
4	4249506	Load Roller	2
4	4249505	Load Roller (Optional)	2
5	4253175	Shim	4
6	4253176	Shim	4
7	4253173	Wear Strip	4
8	104506	O-Ring	8
9	4082846	Capscrew	2
10	4189066	Capscrew	2
11	~~4309896~~		
	4369706	Spacer	2
12	4275100	Rubber Pad	2
13	292620	Nut	2
14	4240554	Restraint (Chain Anchor)	2
15	4187690	Locknut	7
16	4185429	Capscrew	3
17	4185431	Capscrew	2
18	4269502	Capscrew (Lube)	2
18	16010	Grease Fitting	1
19	1310611	Clamp	1
20	4033414	Bushing	2
21	300982	Bushing	2
22	4734401	Hose Assy	1
23	4734473	Hyd Velocity Fuse	1
24	4733755	Valve Block	1
25	4734400	Hose Assy	1
26	1486749	Fitting	3
27	1473888	Fitting	1
27	~~1495115~~		
	280154	O-Ring	1
28	~~6996710~~		
	1528603	Locknut , Bulkhead (ORFS/T - 1-14)	1
29	4690127	Tube Assy	1
30	17221	Fitting	2
30	16483	O-Ring	1
31	353198	Clamp	4

MAST ASSEMBLY

FOUR STAGE FULL FREE-LIFT – PAGE 3 OF 3 (9/2023 →)

ITEM	PART NO.	DESCRIPTION	QTY
32	4693822	Hose (Lift Height 6058mm)	2
32	4693823	Hose (Lift Height 6362mm)	2
32	4693824	Hose (Lift Height 6669mm)	2
32	4693825	Hose (Lift Height 6970mm)	2
32	4693824	Hose (Lift Height 6220mm)	2
33	4240558	Retainer	4
33	4233556	Hose Clamp (Alternate Part)	4
34	4720171	Tank (Drain Back Collection)	1
35	4689930	Cylinder Assy (LH) (Lift Height 6058mm)	1
35	4689931	Cylinder Assy (LH) (Lift Height 6362mm)	1
35	4689932	Cylinder Assy (LH) (Lift Height 6669mm)	1
35	4689933	Cylinder Assy (LH) (Lift Height 6970mm)	1
35	4689948	Cylinder Assy (LH) (Lift Height 6220mm)	1
36	4690984	Cylinder Assy (RH) (Lift Height 6058mm)	1
36	4690985	Cylinder Assy (RH) (Lift Height 6362mm)	1
36	4690986	Cylinder Assy (RH) (Lift Height 6669mm)	1
36	4690987	Cylinder Assy (RH) (Lift Height 6970mm)	1
36	4691001	Cylinder Assy (RH) (Lift Height 6220mm)	1
37	4242898	Shim	2
38	4242897	Shim	2
39	1333382	Washer (Mast Shim) (0.060 in.)	4
40	4240605	Intermediate Mast (Lift Height 6058mm)	1
40	4240606	Intermediate Mast (Lift Height 6362mm)	1
40	4240607	Intermediate Mast (Lift Height 6669mm)	1
40	4240608	Intermediate Mast (Lift Height 6970mm)	1
40	4240607	Intermediate Mast (Lift Height 6220mm)	1
40	4231443	Stubshaft	2
41	4249499	Load Roller	2
41	4270149	Load Roller (Optional)	2
42	131358	Snap Ring	2
43	4029443	Nut , Castle	2
44	4145952	Restraint	2
45	4133281	Capscrew	2
46	4219868	Nut , Castle	2
47	15234	Cotter Pin	2
48	4240561	Chain Anchor	2
49	4242899	Pin	4
50	15232	Cotter Pin	4
51	4240562	Chain Anchor	2
52	4077646	Leaf Chain - Fixed Length (Lift Height 6058mm)	2
52	4077648	Leaf Chain - Fixed Length (Lift Height 6362mm)	2
52	4077650	Leaf Chain - Fixed Length (Lift Height 6669mm)	2
52	4077653	Leaf Chain - Fixed Length (Lift Height 6970mm)	2
52	4077650	Leaf Chain - Fixed Length (Lift Height 6220mm)	2
53	4345375	Chain Sheave	2
54	304527	Snap Ring	2
55	4348957	Breather Cap	1
56	1481348	Lowering Control Valve	1
57	1486740	Fitting	1

See Service Manual for service procedures.
©2026 HYSTER COMPANY

NOTES

MAIN LIFT CYLINDER ASSEMBLY (FIGURE 19-5)

FOUR STAGE FULL FREE-LIFT — LEFT HAND

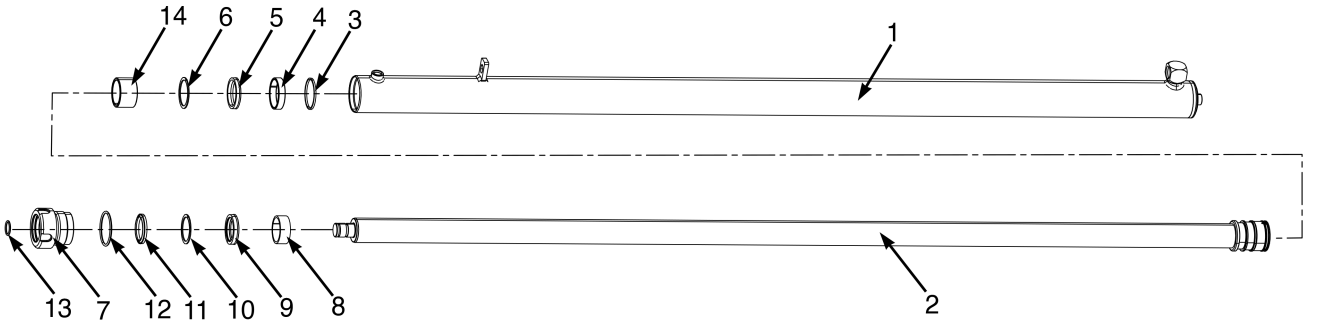

BP171224

©2026 HYSTER COMPANY

MAIN LIFT CYLINDER ASSEMBLY
FOUR STAGE FULL FREE-LIFT – LEFT HAND

KEY:
A: Class II
B: Class III

ITEM	PART NO.	DESCRIPTION	QTY A	QTY B
	4689930	Cylinder Assy (Lift Height 6058mm)	1	..
	4689931	Cylinder Assy (Lift Height 6362mm)	1	..
	4689932	Cylinder Assy (Lift Height 6669mm)	1	..
	4689933	Cylinder Assy (Lift Height 6970mm)	1	..
	4689948	Cylinder Assy (Lift Height 6220mm)	..	1
1	4690934	Tube Wldmt-Cylinder (Lift Height 6058mm)	1	..
1	4690935	Tube Wldmt-Cylinder (Lift Height 6362mm)	1	..
1	4690938	Tube Wldmt-Cylinder (Lift Height 6669mm)	1	..
1	4690939	Tube Wldmt-Cylinder (Lift Height 6970mm)	1	..
1	4690938	Tube Wldmt-Cylinder (Lift Height 6220mm)	..	1
2	4690850	Rod Assy (Lift Height 6058mm)	1	..
2	4690851	Rod Assy (Lift Height 6362mm)	1	..
2	4690852	Rod Assy (Lift Height 6669mm)	1	..
2	4690853	Rod Assy (Lift Height 6970mm)	1	..
2	4690852	Rod Assy (Lift Height 6220mm)	..	1
3	1379063	Piston Ring	1	1
4	1379064	Wear Ring	1	1
5	1381066	Piston Seal	1	1
6	638249	Back-Up Ring	1	1
7	4689957	Gland	1	1
8	334155	Wear Ring	1	1
9	378440	Seal	1	1
10	215928	Back-UP Ring	1	1
11	1383065	Rod Wiper	1	1
12	57664	O-Ring	1	1
13	39373	O-Ring	1	1
14	2065130	Spacer (Lift Height 6058mm)	1	..
14	2035072	Spacer (Lift Height 6362mm)	1	..
14	4690735	Spacer (Lift Height 6669mm)	1	..
14	4607518	Spacer (Lift Height 6970mm)	1	..
14	4690744	Spacer (Lift Height 6220mm)	..	1
	4269001	Kit-Seal	1	1

©2026 HYSTER COMPANY

MAIN LIFT CYLINDER ASSEMBLY (FIGURE 19-6)

FOUR STAGE FULL FREE-LIFT — RIGHT HAND

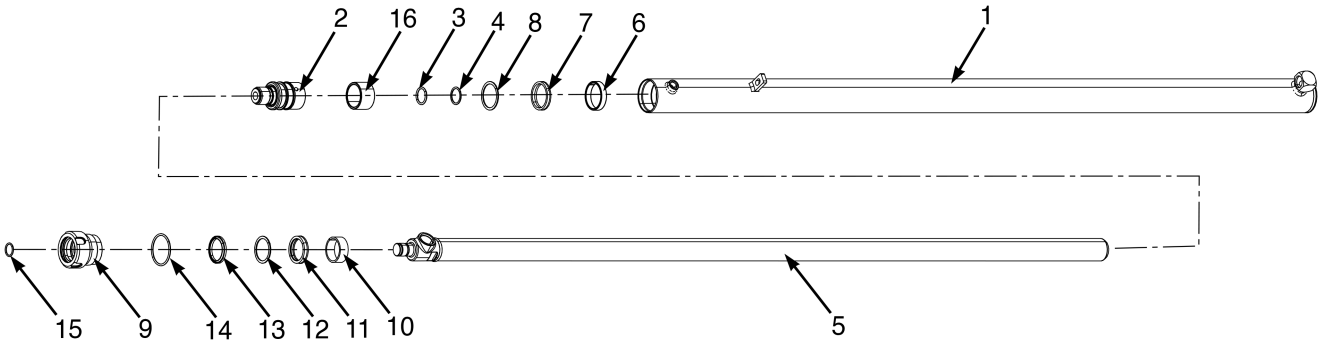

BP171225

KEY:
A: Class II
B: Class III

ITEM	PART NO.	DESCRIPTION	QTY A	QTY B
	4690984	Cylinder Assy (Lift Height 6058mm)	1	..
	4690985	Cylinder Assy (Lift Height 6362mm)	1	..
	4690986	Cylinder Assy (Lift Height 6669mm)	1	..
	4690987	Cylinder Assy (Lift Height 6970mm)	1	..
	4691001	Cylinder Assy (Lift Height 6220mm)	1	..
1	4690934	Tube Wldmt-Cylinder (Lift Height 6058mm)	1	..
1	4690935	Tube Wldmt-Cylinder (Lift Height 6362mm)	1	..
1	4690938	Tube Wldmt-Cylinder (Lift Height 6669mm)	1	..
1	4690939	Tube Wldmt-Cylinder (Lift Height 6970mm)	1	..
1	4690938	Tube Wldmt-Cylinder (Lift Height 6220mm)	..	1
2	. . . . .	Piston Cylinder	1	1
3	237812	O-Ring	1	1
4	165053	Back-Up Ring	1	1
5	4690968	Cylinder Rod (Lift Height 6058mm)	1	..
5	4690969	Cylinder Rod (Lift Height 6362mm)	1	..
5	4690970	Cylinder Rod (Lift Height 6669mm)	1	..
5	4690971	Cylinder Rod (Lift Height 6970mm)	1	..
5	4690970	Cylinder Rod (Lift Height 6220mm)	..	1
6	1379064	Wear Ring	1	1
7	1381066	Piston Seal	1	1
8	638249	Back-Up Ring	1	1
9	4689957	Gland	1	1
10	334155	Wear Ring	1	1
11	378440	Seal	1	1
12	215928	Back-UP Ring	1	1
13	1383065	Rod Wiper	1	1
14	57664	O-Ring	1	1
15	39373	O-Ring	1	1
16	2065130	Spacer (Lift Height 6058mm)	1	..
16	2035072	Spacer (Lift Height 6362mm)	1	..
16	4690735	Spacer (Lift Height 6669mm)	1	..
16	4607518	Spacer (Lift Height 6970mm)	1	..
16	4690744	Spacer (Lift Height 6220mm)	..	1

See Service Manual for service procedures.
©2026 HYSTER COMPANY

KEY:
A: Class II
B: Class III

ITEM	PART NO.	DESCRIPTION	QTY A	QTY B
	4269001	Kit-Seal	1	1

FREE-LIFT CYLINDER (FIGURE 19-7)
FOUR STAGE FULL FREE-LIFT

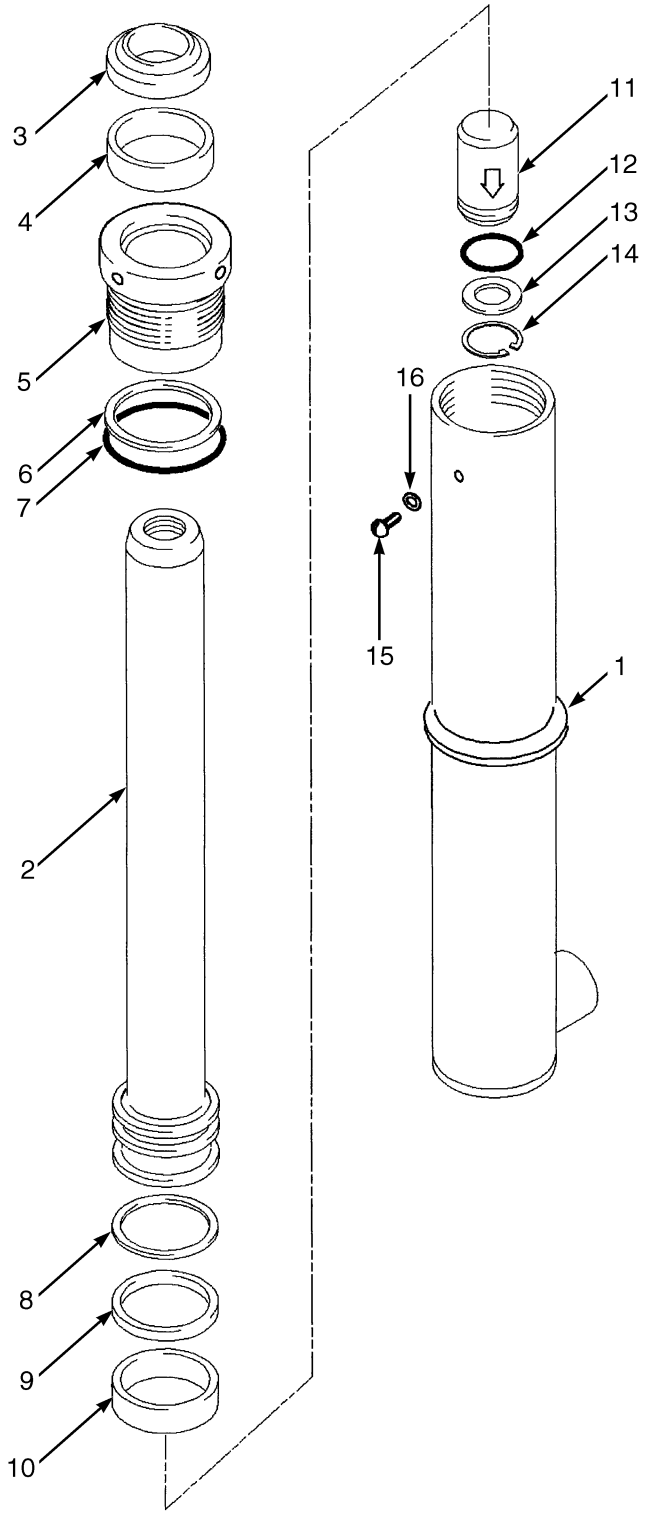

BP170160

©2026 HYSTER COMPANY

FREE-LIFT CYLINDER
FOUR STAGE FULL FREE-LIFT

ITEM	PART NO.	DESCRIPTION	QTY
	4690419	Free Lift Cylinder (Lift Height 6058mm)	1
	4690420	Free Lift Cylinder (Lift Height 6362mm)	1
	4690421	Free Lift Cylinder (Lift Height 6669mm)	1
	4690422	Free Lift Cylinder (Lift Height 6970mm)	1
	4672902	Free Lift Cylinder (Lift Height 6220mm)	1
1	4232355	Tube Wldmt-Cylinder (Lift Height 6058mm)	1
1	4232357	Tube Wldmt-Cylinder (Lift Height 6362mm)	1
1	4232359	Tube Wldmt-Cylinder (Lift Height 6669mm)	1
1	4232360	Tube Wldmt-Cylinder (Lift Height 6970mm)	1
1	4232358	Tube Wldmt-Cylinder (Lift Height 6220mm)	1
2	4234454	Rod Assy (Lift Height 6058mm)	1
2	4234456	Rod Assy (Lift Height 6362mm)	1
2	4234458	Rod Assy (Lift Height 6669mm)	1
2	4234483	Rod Assy (Lift Height 6970mm)	1
2	4234458	Rod Assy (Lift Height 6220mm)	1
3	1463105	Rod Wiper	1
4	1622946	Rod Seal	1
5	1362880	Gland	1
6	615135	Back-Up Ring	1
7	55146	O-Ring	1
8	638250	Back-Up Ring	1
9	201829	Rod Seal	1
10	1362881	Wear Ring	1
11	297538	Check Valve	1
12	190580	O-Ring	1
13	297531	Washer	1
13	637635	Washer (Optional)	1
14	187388	Snap Ring	1
15	295649	Screw (Button Head)	1
16	190887	Sealing Ring	1
	4676393	Kit-Seal	1

©2026 HYSTER COMPANY

CARRIAGE (FIGURE 19-8)
STANDARD — FOUR STAGE FULL FREE-LIFT

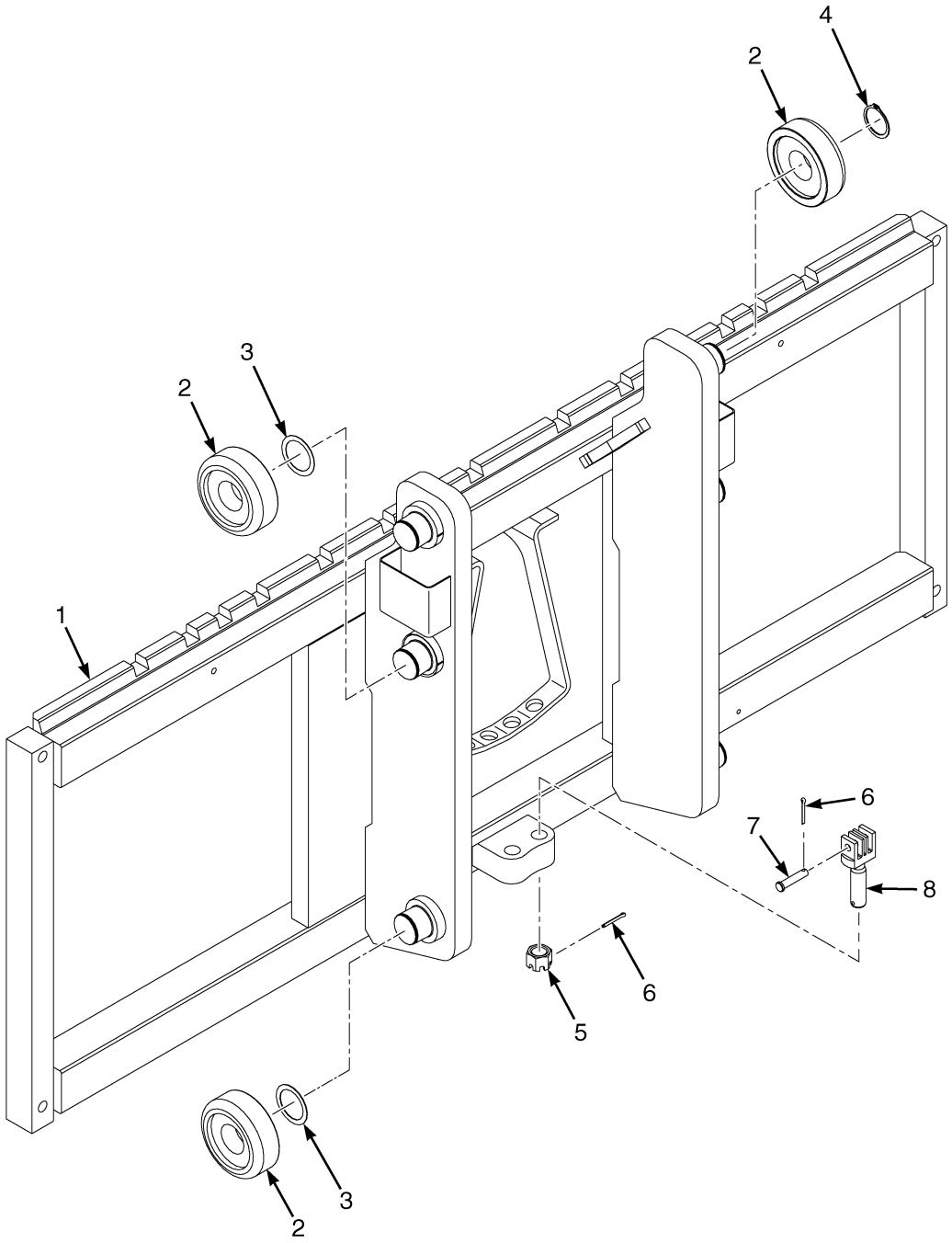

BP171049

©2026 HYSTER COMPANY

CARRIAGE

STANDARD – FOUR STAGE FULL FREE-LIFT

KEY:
A: Class II
B: Class III

ITEM	PART NO.	DESCRIPTION	QTY A	QTY B
	4693946	Carriage - Standard, Class II	1	..
	4693965	Carriage - Standard, Class III	..	1
	4693966	Carriage - Standard, Class III	..	1
	4693967	Carriage - Standard, Class III	..	1
1	4240214	Carriage Wldmt - Standard, Class II	1	..
1	4240222	Carriage Wldmt - Standard, Class III	..	1
1	4240223	Carriage Wldmt - Standard, Class III	..	1
1	4240224	Carriage Wldmt - Standard, Class III	..	1
1	4258594	Stubshaft	6	6
2	1333399	Load Roller ("B") (3.63 in./3.62 in.)	6	6
2	1395169	Load Roller ("A") (3.61 in./3.60 in.) (Optional)	6	6
2	1337900	Load Roller ("C") (3.67 in./3.66 in.) (Optional)	6	6
3	129387	Shim (0.020 in.)	AR	AR
3	4263698	Shim (0.762 in.) (Optional)	AR	AR
4	58901	Snap Ring	2	2
5	4219867	Nut , Castle	2	2
6	~~2056815~~			
	15224	Cotter Pin	2	2
7	4242899	Pin	2	2
8	4253177	Chain Anchor	2	..
8	4253180	Chain Anchor	..	2
8	4253177	Chain Anchor (Alternate Part)	..	2

CARRIAGE (FIGURE 19-9)

INTEGRAL SIDE-SHIFT — FOUR STAGE FULL FREE-LIFT

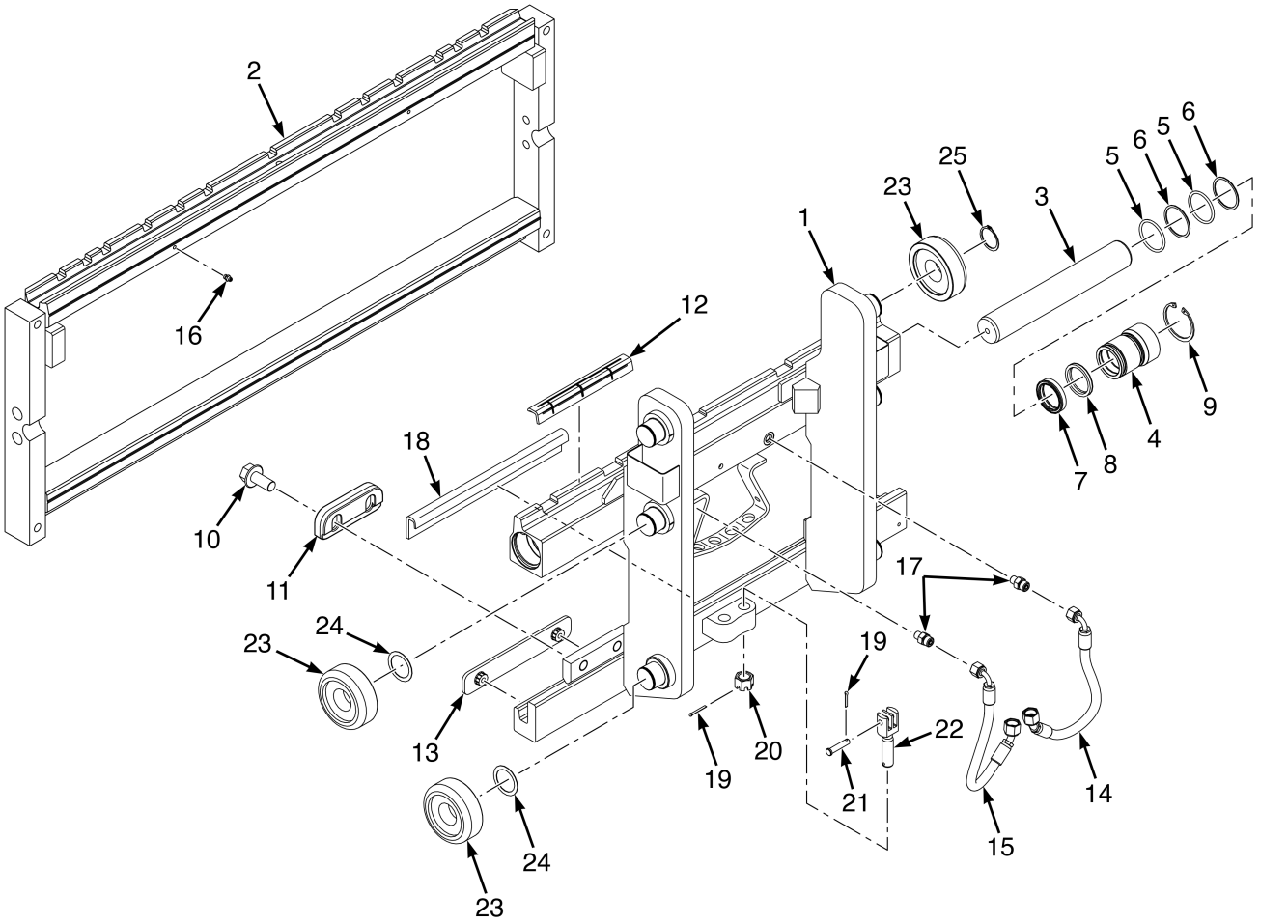

©2026 HYSTER COMPANY

CARRIAGE

INTEGRAL SIDE-SHIFT – FOUR STAGE FULL FREE-LIFT

KEY:
A: Class II
B: Class III

ITEM	PART NO.	DESCRIPTION	QTY A	QTY B
	4694125	Side-Shift Carriage - ISS, Class II	1	..
	4693981	Side-Shift Carriage - ISS, Class III	..	1
	4693982	Side-Shift Carriage - ISS, Class III	..	1
	4693983	Side-Shift Carriage - ISS, Class III	..	1
1	4240231	Carriage Wldmt - ISS, Class II (1067mm)	1	..
1	4240238	Carriage Wldmt - ISS, Class III (1067mm)	..	1
1	4240239	Carriage Wldmt - ISS, Class III (1220mm)	..	1
1	4240240	Carriage Wldmt - ISS, Class III (1372mm)	..	1
1	4258594	Stubshaft	6	6
2	4330059	Frame (42in)	1	..
2	4330083	Frame (42in) (1067mm)	..	1
2	4330084	Frame (48in) (1220mm)	..	1
2	4330085	Frame (54in) (1372mm)	..	1
3	4090982	Cylinder Rod	2	..
3	4090984	Cylinder Rod	..	2
4	4215251	Gland Assembly	2	..
4	4215252	Gland (Assembly) (Class III)	..	1
4	4215095	Gland	1	..
4	4215096	Gland	..	1
4	4217294	Kit-Seal	1	..
4	4217295	Kit-Seal	..	1
5	55407	O-Ring	4	..
5	~~4028986~~			
	92861	O-Ring	..	4
6	153919	Back-Up Ring	4	..
6	147972	Back-Up Ring	..	4
7	2032488	Seal	2	..
7	378440	Seal	..	2
8	1383064	Rod Wiper	2	..
8	1383065	Rod Wiper	..	2
9	128444	Snap Ring	2	..
9	304552	Snap Ring	..	2
10	4239917	Capscrew	4	4
11	4687153	Hook (Lower)	2	2
12	4693335	Bearing (Upper)	2	2
13	4693334	Bearing (Lower)	2	2
14	4698109	Hose Assy	1	..
14	4698111	Hose Assy	..	1
15	4711992	Hose Assy	1	..
15	4698110	Hose Assy	..	1
16	4318979	Grease Fitting	2	2
17	4116399	Fitting , Straight	2	2
18	4292621	Bearing - Strip Lower Carriage Bar (1067mm)	1	1
18	4292622	Bearing - Strip Lower Carriage Bar (1220mm)	..	1
18	4292623	Bearing - Strip Lower Carriage Bar (1372mm)	..	1

©2026 HYSTER COMPANY

CARRIAGE

INTEGRAL SIDE-SHIFT – FOUR STAGE FULL FREE-LIFT

KEY:
A: Class II
B: Class III

ITEM	PART NO.	DESCRIPTION	QTY A	QTY B
19	~~2056815~~			
	15224	Cotter Pin	4	4
20	4219867	Nut , Castle	2	2
21	4242899	Pin	2	2
22	4253177	Chain Anchor	2	..
22	4253180	Chain Anchor	..	2
22	4253177	Chain Anchor (Alternate Part)	..	2
23	1333399	Load Roller ("B") (3.63 in./3.62 in.)	6	6
23	1395169	Load Roller ("A") (3.61 in./3.60 in.) (Optional)	6	6
23	1337900	Load Roller ("C") (3.67 in./3.66 in.) (Optional)	6	6
24	129387	Shim (0.020 in.)	12	12
24	4263698	Shim (0.762 in.) (Optional)	12	12
25	58901	Snap Ring	2	2

See Service Manual for service procedures.
©2026 HYSTER COMPANY

NOTES

HEADER HOSE (FIGURE 19-10)
FOUR STAGE FULL FREE-LIFT (→ 6/2023)

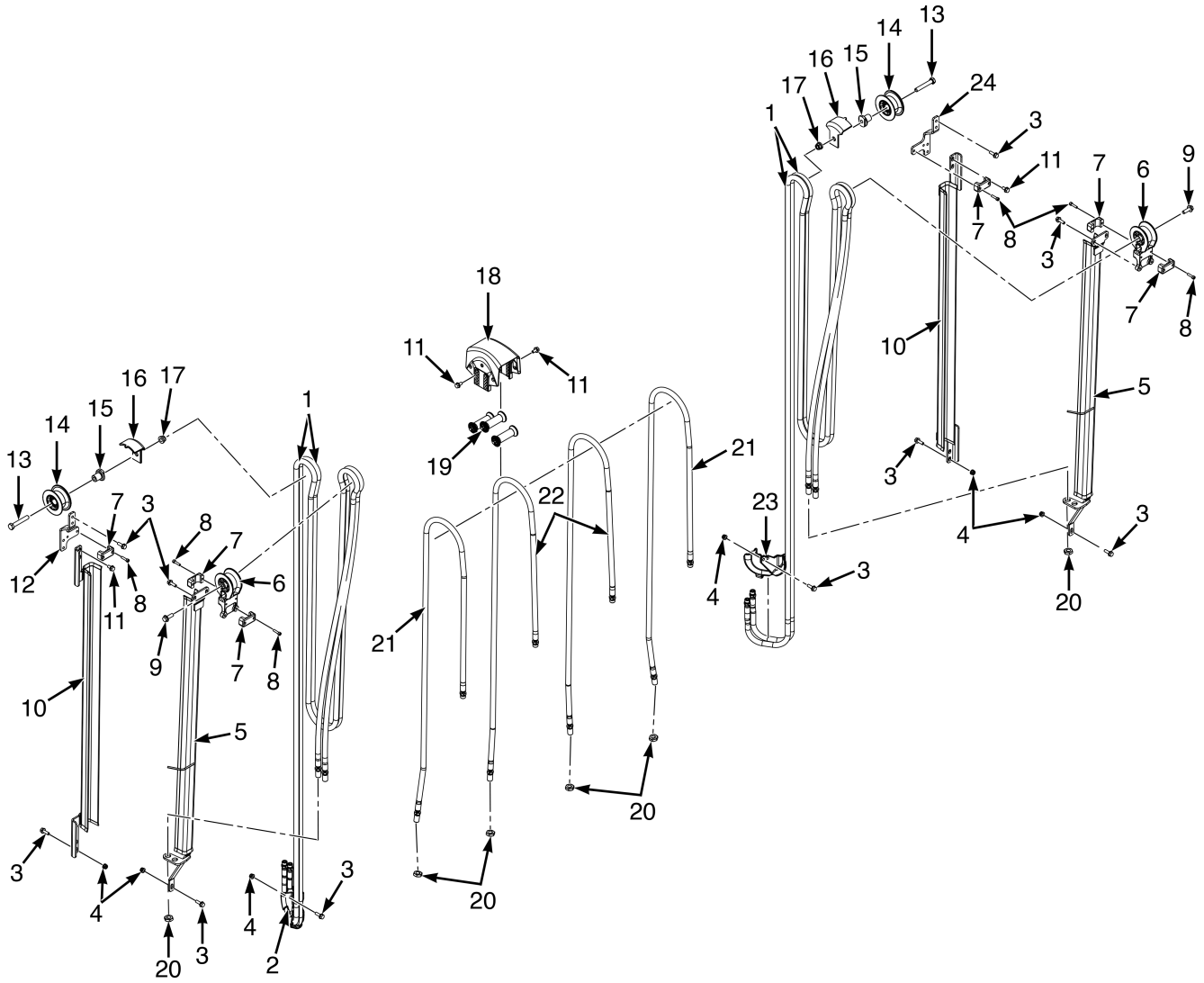

©2026 HYSTER COMPANY

HEADER HOSE

FOUR STAGE FULL FREE-LIFT (→ 6/2023)

ITEM	PART NO.	DESCRIPTION	QTY
1	4691256	Header Hose (LH 6058mm, Class II)	4
1	4735556	Header Hose (LH 6058mm, Class II) / (Alternate Part)	4
1	4691257	Header Hose (LH 6362mm, Class II)	4
1	4735557	Header Hose (LH 6362mm, Class II) / (Alternate Part)	4
1	4691259	Header Hose (LH 6669mm, Class II and 6220mm, Class III)	4
1	4735558	Header Hose (LH 6669mm, Class II and 6220mm, Class III) / (Alternate Part)	4
1	4691260	Header Hose (LH 6970mm, Class II)	4
1	4735559	Header Hose (LH 6970mm, Class II) / (Alternate Part)	4
2	4683827	Casting - Header Hose Turnaround	1
3	4185429	Capscrew	18
4	4187690	Locknut	5
5	4239905	Channel (LH 6058mm, Class II)	1
5	4239906	Channel (LH 6362mm, Class II)	1
5	4239907	Channel (LH 6669mm, Class II and 6220mm, Class III)	1
5	4239908	Channel (LH 6970mm, Class II)	1
6	4257404	Hose Guide	2
7	1360386	Clamp (Double Hose)	6
8	1581741	Capscrew	12
9	4185434	Capscrew	2
10	4240005	Channel (LH 6058mm, Class II)	1
10	4240006	Channel (LH 6362mm, Class II)	1
10	4240007	Channel (LH 6669mm, Class II and 6220mm, Class III)	1
10	4240008	Channel (LH 6970mm, Class II)	1
11	4223693	Capscrew	4
12	4256957	Plate	1
13	4299180	Capscrew	1
14	~~1381595~~		
	1494017	Hose Sheave	2
15	4289068	Stubshaft	2
16	4289019	Cap - Header Hose Sheave	2
17	4187692	Locknut	2
18	4696052	Crosshead - Hose Guide	1
19	. . . . .	Roller	3
20	4187786	Nut	8
21	4719096	Header Hose (LH 6058mm, Class II)	2
21	4719097	Header Hose (LH 6362mm, Class II)	2
21	4719098	Header Hose (LH 6669mm, Class II and 6220mm, Class III)	2
21	4719099	Header Hose (LH 6970mm, Class II)	2
22	4719090	Header Hose (LH 6058mm, Class II)	2
22	4719105	Header Hose (LH 6362mm, Class II)	2
22	4719091	Header Hose (LH 6669mm, Class II and 6220mm, Class III)	2
22	4719092	Header Hose (LH 6970mm, Class II)	2
23	4684006	Casting - Header Hose Turnaround	1
24	4256956	Plate	1

©2026 HYSTER COMPANY

HEADER HOSE (FIGURE 19-11)

FOUR STAGE FULL FREE-LIFT (6/2023 →)

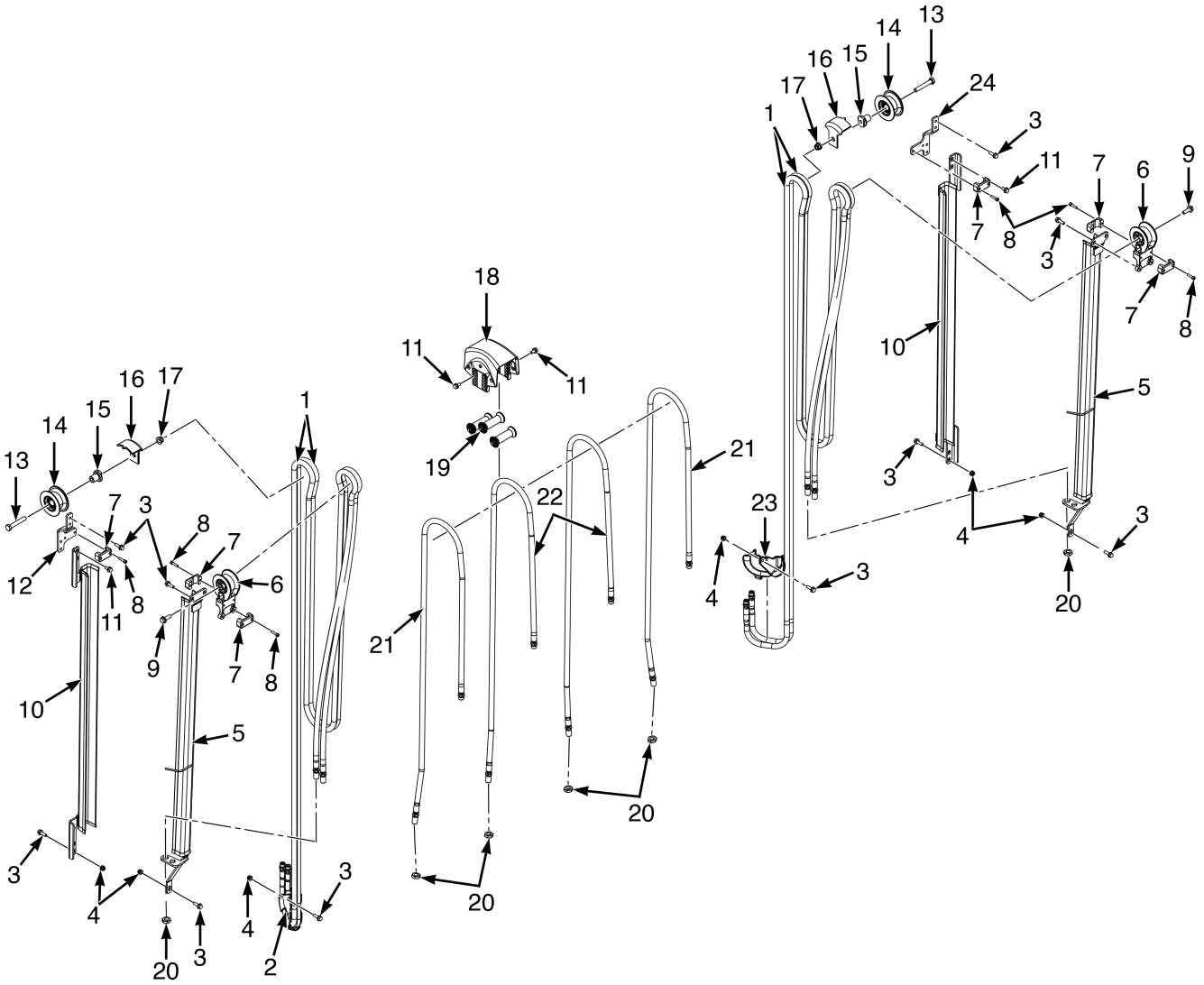

©2026 HYSTER COMPANY

HEADER HOSE

FOUR STAGE FULL FREE-LIFT (6/2023 →)

KEY:
A: With 3 Function Only
B: With 3rd and 4th Function

ITEM	PART NO.	DESCRIPTION	QTY A	QTY B
1	4735554	Header Hose (Lift Height 4900-5500mm Cls II / 4790-5150mm Cls III)	1	2
1	4735555	Header Hose (Lift Height 5754/5380mm)	1	2
1	4735556	Header Hose (Lift Height 6058/5660mm)	1	2
1	4735557	Header Hose (Lift Height 6362/5940mm)	1	2
1	4735558	Header Hose (Lift Height 6669/6220mm)	1	2
1	4735559	Header Hose (Lift Height 6970/6500mm)	1	2
1	4735560	Header Hose (Lift Height 7274/6780mm)	1	2
1	4735561	Header Hose (Lift Height 7578/7060mm)	1	2
1	4735562	Header Hose (Lift Height 7882/7340mm)	1	2
1	4735563	Header Hose (Lift Height 8186/7620mm)	1	2
1	4735564	Header Hose (Lift Height 8490/7900mm)	1	2
1	4735565	Header Hose (Lift Height 8794/8180mm)	1	2
1	4735566	Header Hose (Lift Height 9098/8460mm)	1	2
2	**a** 4683827	Casting - Header Hose Turnaround	1	1
2	**c** 4734785	Casting - Header Hose Turnaround	1	1
3	4185429	Capscrew	9	18
4	4187690	Locknut	5	10
5	4239901	Channel (Lift Height 4900-5500mm Cls II / 4790-5150mm Cls III)	1	2
5	4239904	Channel (Lift Height 5754/5380mm)	1	2
5	4239905	Channel (Lift Height 6058/5660mm)	1	2
5	4239906	Channel (Lift Height 6362/5940mm)	1	2
5	4239907	Channel (Lift Height 6669/6220mm)	1	2
5	4239908	Channel (Lift Height 6970/6500mm)	1	2
5	4239909	Channel (Lift Height 7274/6780mm)	1	2
5	4239910	Channel (Lift Height 7578/7060mm)	1	2
5	4239911	Channel (Lift Height 7882/7340mm)	1	2
5	4239912	Channel (Lift Height 8186/7620mm)	1	2
5	4239913	Channel (Lift Height 8490/7900mm)	1	2
5	4239914	Channel (Lift Height 8794/8180mm)	1	2
5	4239915	Channel (Lift Height 9098/8460mm)	1	2
6	4369284	Hose Guide	1	2
7	1360386	Clamp (Double Hose)	3	6
8	1695790	Capscrew	6	12
9	4185434	Capscrew	1	2
10	4375041	Channel (Lift Height 4900-5500mm Cls II / 4790-5150mm Cls III)	1	2
10	4375044	Channel (Lift Height 5754/5380mm)	1	2
10	4375045	Channel (Lift Height 6058/5660mm)	1	2
10	4375046	Channel (Lift Height 6362/5940mm)	1	2
10	4375047	Channel (Lift Height 6669/6220mm)	1	2
10	4375048	Channel (Lift Height 6970/6500mm)	1	..
10	4375049	Channel (Lift Height 7274/6780mm)	1	2
10	4375050	Channel (Lift Height 7578/7060mm)	1	2
10	4375051	Channel (Lift Height 7882/7340mm)	1	2
10	4375052	Channel (Lift Height 8186/7620mm)	1	2
10	4375053	Channel (Lift Height 8490/7900mm)	1	2

©2026 HYSTER COMPANY

HEADER HOSE

FOUR STAGE FULL FREE-LIFT (6/2023 →)

KEY:
A: With 3 Function Only
B: With 3rd and 4th Function

ITEM	PART NO.	DESCRIPTION	QTY A	QTY B
10	4375054	Channel (Lift Height 8794/8180mm)	1	2
10	4375055	Channel (Lift Height 9098/8460mm)	1	2
11	4223693	Capscrew	6	8
12	4256957	Plate	..	1
13	4299180	Capscrew	1	2
14	**b** ~~1381595~~			
	1494017	Hose Sheave	1	2
14	**d** 4041194	Hose Sheave	1	2
15	4336717	Stubshaft	1	2
16	4289019	Cap (Header Hose Sheave)	1	2
17	4187692	Locknut	1	2
18	4696052	Crosshead - Hose Guide	1	..
19	. . . . .	Roller	3	..
20	4187786	Nut	4	8
21	4719082	Header Hose (Lift Height 4900-5500mm Cls II / 4790-5150mm Cls III)	..	2
21	4719074	Header Hose (Lift Height 5754/5380mm)	..	2
21	4719076	Header Hose (Lift Height 6058/5660mm)	..	2
21	4719077	Header Hose (Lift Height 6362/5940mm)	..	2
21	4719078	Header Hose (Lift Height 6669/6220mm)	..	2
21	4719079	Header Hose (Lift Height 6970/6500mm)	..	2
21	4719080	Header Hose (Lift Height 7274/6780mm)	..	2
21	4719081	Header Hose (Lift Height 7578/7060mm)	..	2
21	4719077	Header Hose (Lift Height 7882/7340mm)	..	2
21	4719078	Header Hose (Lift Height 8186/7620mm)	..	2
21	4719079	Header Hose (Lift Height 8490/7900mm)	..	2
21	4719080	Header Hose (Lift Height 8794/8180mm)	..	2
21	4719081	Header Hose (Lift Height 9098/8460mm)	..	2
22	4719075	Header Hose (Lift Height 4900-5500mm Cls II / 4790-5150mm Cls III)	1	2
22	4719082	Header Hose (Lift Height 5754/5380mm)	1	2
22	4719083	Header Hose (Lift Height 6058/5660mm)	1	2
22	4719084	Header Hose (Lift Height 6362/5940mm)	1	2
22	4719085	Header Hose (Lift Height 6669/6220mm)	1	2
22	4719086	Header Hose (Lift Height 6970/6500mm)	1	2
22	4719087	Header Hose (Lift Height 7274/6780mm)	1	2
22	4719101	Header Hose (Lift Height 7578/7060mm)	1	2
22	4719084	Header Hose (Lift Height 7882/7340mm)	1	2
22	4719085	Header Hose (Lift Height 8186/7620mm)	1	2
22	4719086	Header Hose (Lift Height 8490/7900mm)	1	2
22	4719087	Header Hose (Lift Height 8794/8180mm)	1	2
22	4719101	Header Hose (Lift Height 9098/8460mm)	1	2
23	4734784	Casting - Header Hose Turnaround	..	2
24	4256956	Plate	1	1

©2026 HYSTER COMPANY

FOOTNOTES:

a → 10/2023
b → 3/2025
c 10/2023 →
d 3/2025 →

NOTES

©2026 HYSTER COMPANY

20 MAST-THREE STAGE FULL FREE-LIFT

SECTION 20
MAST-THREE STAGE FULL FREE-LIFT

DESCRIPTION	PAGE
CARRIAGE	
INTEGRAL SIDE-SHIFT - THREE STAGE FULL FREE-LIFT	20-38
STANDARD - THREE STAGE FULL FREE-LIFT	20-42
FREE LIFT TUBES	
THREE STAGE FULL FREE-LIFT - LOW	20-51
THREE STAGE FULL FREE-LIFT - HIGH	20-52
FREE-LIFT CYLINDER	
THREE STAGE FULL FREE-LIFT - 2.0-2.5T (G508)	20-16
THREE STAGE FULL FREE-LIFT - 3.0-3.5T (G563)	20-34
THREE STAGE FULL FREE-LIFT - 2.0-2.5T (A2M3)	20-71
THREE STAGE FULL FREE-LIFT - 3.0-3.5T (A2M4)	20-85
HEADER HOSE AND ATTACHING PARTS	
THREE STAGE FULL FREE-LIFT	20-44
THREE STAGE FULL FREE-LIFT - H50A WITH 28X9 TIRES	20-48
THREE STAGE FULL FREE-LIFT - A2M4	20-88
MAIN LIFT CYLINDER	
THREE STAGE FULL FREE-LIFT - 2.0-2.5T (G508)	20-13
THREE STAGE FULL FREE-LIFT - 3.0-3.5T (G563)	20-31
THREE STAGE FULL FREE-LIFT - 2.0-2.5T (A2M3)	20-69
THREE STAGE FULL FREE-LIFT - 3.0-3.5T (A2M4)	20-83
MAST ASSEMBLY	
THREE STAGE FULL FREE-LIFT 2.0-2.5T (A2M3) - PAGE 1 OF 3	20-60
THREE STAGE FULL FREE-LIFT 2.0-2.5T (A2M3) - PAGE 2 OF 3	20-62
THREE STAGE FULL FREE-LIFT 2.0-2.5T (A2M3) - PAGE 3 OF 3	20-66
THREE STAGE FULL FREE-LIFT 2.0-2.5T (G508) - PAGE 1 OF 3	20-2
THREE STAGE FULL FREE-LIFT 2.0-2.5T (G508) - PAGE 2 OF 3	20-6
THREE STAGE FULL FREE-LIFT 2.0-2.5T (G508) - PAGE 3 OF 3	20-10
THREE STAGE FULL FREE-LIFT 3.0-3.5T (A2M4) - PAGE 1 OF 3	20-74
THREE STAGE FULL FREE-LIFT 3.0-3.5T (A2M4) - PAGE 2 OF 3	20-76
THREE STAGE FULL FREE-LIFT 3.0-3.5T (A2M4) - PAGE 3 OF 3	20-80
THREE STAGE FULL FREE-LIFT 3.0-3.5T (G563) - PAGE 1 OF 3	20-20
THREE STAGE FULL FREE-LIFT 3.0-3.5T (G563) - PAGE 2 OF 3	20-24
THREE STAGE FULL FREE-LIFT 3.0-3.5T (G563) - PAGE 3 OF 3	20-28
MAST ELECTRICAL	
WIRE TAKE-UP (→ 6/2022)	20-54
WIRE TAKE-UP (6/2022 →)	20-56
WIRE TAKE-UP - A2M4	20-92

©2026 HYSTER COMPANY

MAST ASSEMBLY (FIGURE 20-1)

THREE STAGE FULL FREE-LIFT 2.0-2.5T (G508) — PAGE 1 OF 3

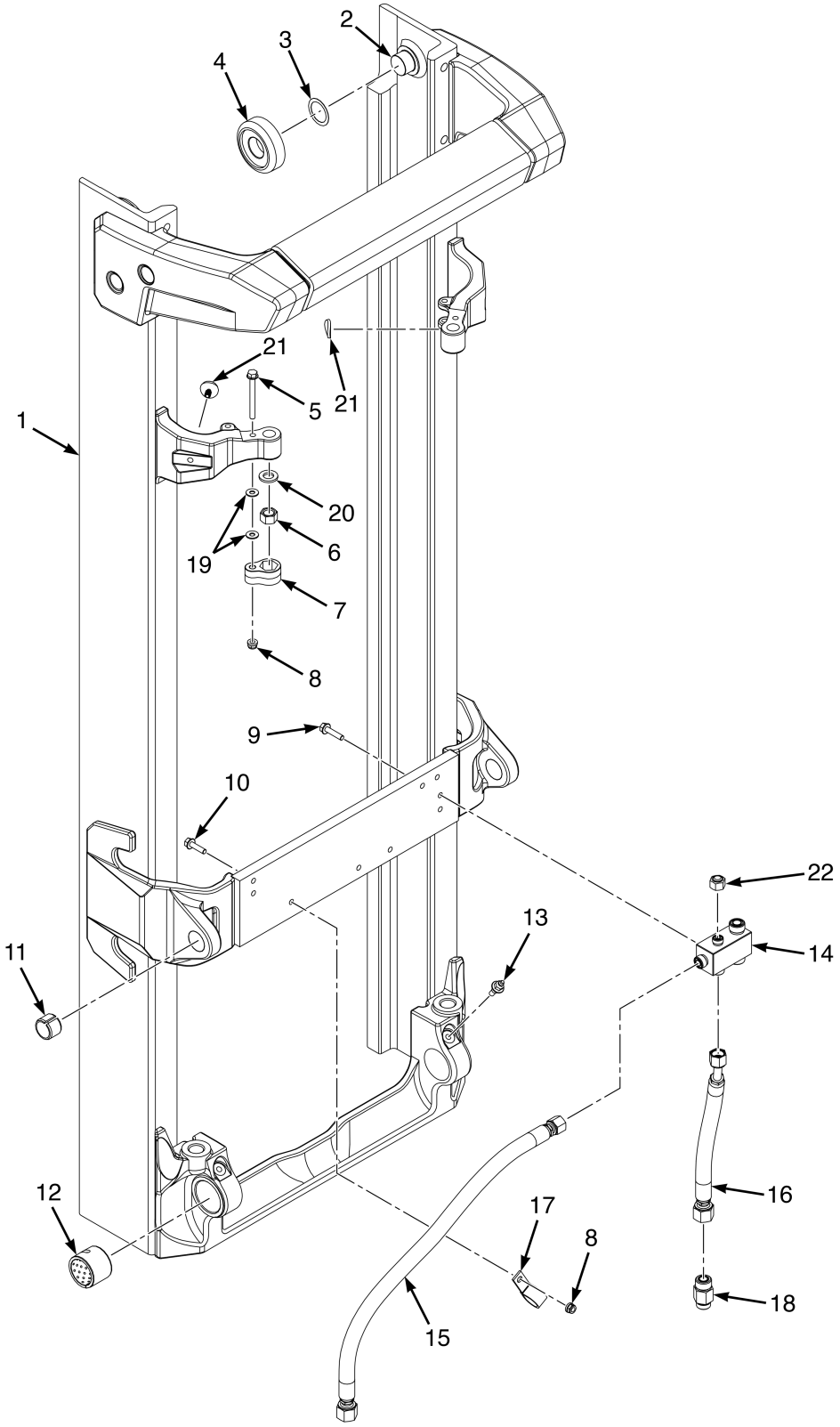

©2026 HYSTER COMPANY

MAST ASSEMBLY

THREE STAGE FULL FREE-LIFT 2.0-2.5T (G508) – PAGE 1 OF 3

G508

ITEM	DESCRIPTION 1 2 3 4	LIFT HEIGHT TO BOTTOM OF FORKS			
		4060 mm (159.8 in.)	4360 mm (171.7 in.)	4610 mm (181.5 in.)	4760 mm (187.4 in.)
	Mast Group Number	G508 4060	G508 4360	G508 4610	G508 4760
	Mast Assy	4691047	4691050	4691052	4691053
1	Outer Mast	4224651	4224651	4224652	4224653

G508

ITEM	DESCRIPTION 1 2 3 4	LIFT HEIGHT TO BOTTOM OF FORKS			
		4910 mm (193.3 in.)	5060 mm (199.2 in.)	5210 mm (205.1 in.)	5510 mm (216.9 in.)
	Mast Group Number	G508 4910	G508 5060	G508 5210	G508 5510
	Mast Assy	4691054	4691055	4691056	4691058
1	Outer Mast	4224654	4224656	4224657	4224659

G508

ITEM	DESCRIPTION 1 2 3 4	LIFT HEIGHT TO BOTTOM OF FORKS			
		5660 mm (222.8 in.)	6110 mm (240.6 in.)	6410 mm (252.4 in.)	6860 mm (270.1 in.)
	Mast Group Number	G508 5660	G508 6110	G508 6410	G508 6860
	Mast Assy	4691059	4691062	4691064	4691067
1	Outer Mast	4224661	4224664	4224667	4224671

ITEM	PART NO.	DESCRIPTION	QTY
	a	Mast Assy	1
1	**a**	Outer Mast	1
2	4231443	Stubshaft	2
3	129387	Shim (0.020 in.)	AR
3	4263698	Shim (0.762 in.) (Optional)	AR
4	4249502	Load Roller	2
4	4249501	Load Roller (Optional)	2
5	4185433	Capscrew	2
6	4029443	Nut , Castle	2
7	4145952	Restraint	2
8	4187690	Locknut	2
9	4185431	Capscrew	4
10	4185430	Capscrew	1
11	300982	Bushing	2
12	4033414	Bushing	2
13	4269502	Capscrew (Lube)	2
13	16010	Grease Fitting	1

©2026 HYSTER COMPANY

MAST ASSEMBLY

THREE STAGE FULL FREE-LIFT 2.0-2.5T (G508) – PAGE 1 OF 3

ITEM	PART NO.	DESCRIPTION	QTY
14	4245292	Manifold - Mast Connection Block	1
15	4700253	Hose Assy	1
16	4700254	Hose Assy	1
17	1310611	Clamp	1
18	4700616	Hyd Velocity Fuse	1
19	**b** 1581851	Washer	4
20	**b** 1581854	Washer	2
21	4275100	Rubber Pad	2
22	1529015	Cap (w/o Accumulator)	1

FOOTNOTES:

a Refer to Table

b → PENDING PER ECN 16122952

©2026 HYSTER COMPANY

NOTES

MAST ASSEMBLY (FIGURE 20-2)

THREE STAGE FULL FREE-LIFT 2.0-2.5T (G508) — PAGE 2 OF 3

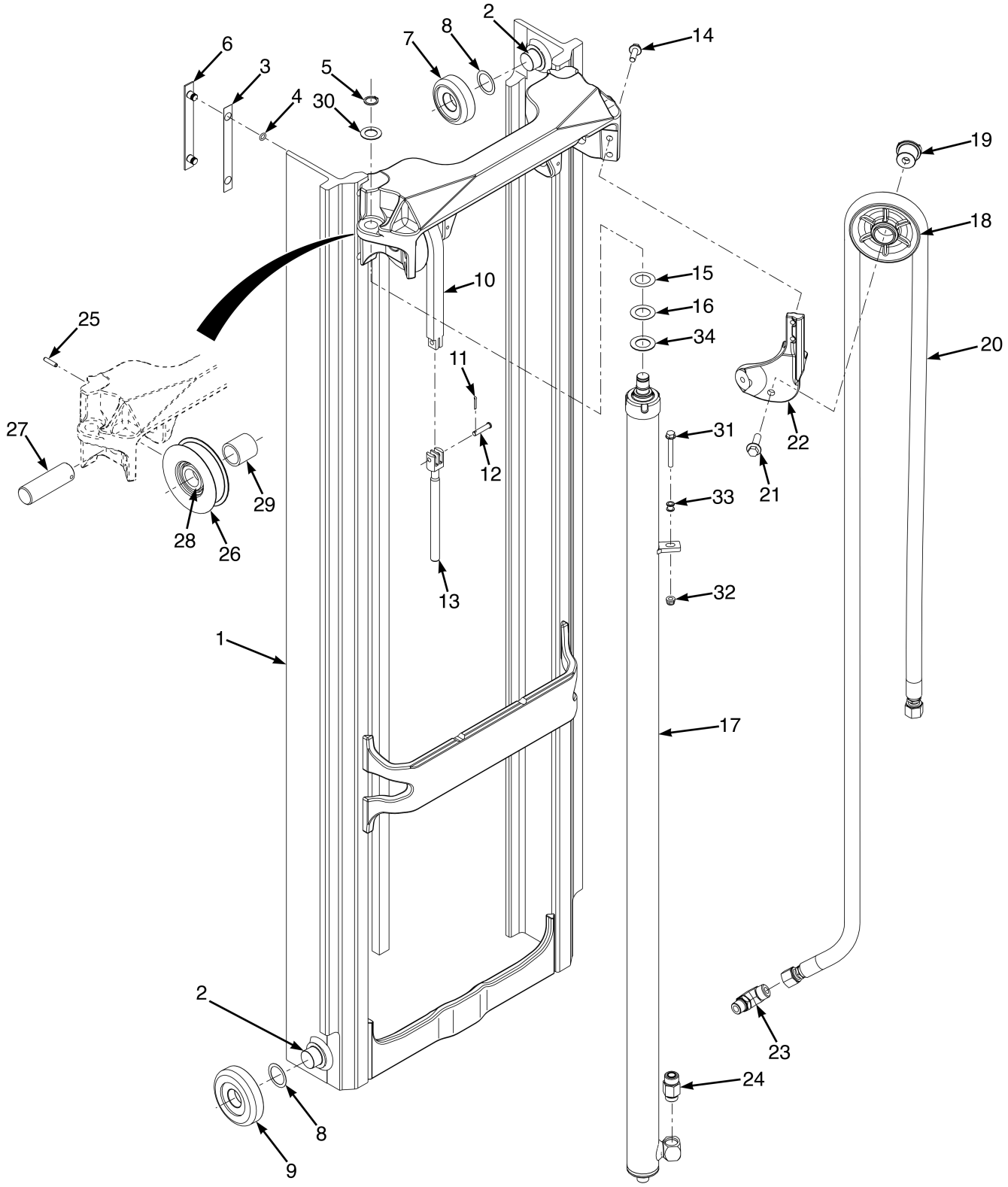

©2026 HYSTER COMPANY

MAST ASSEMBLY

THREE STAGE FULL FREE-LIFT 2.0-2.5T (G508) – PAGE 2 OF 3

G508

ITEM	DESCRIPTION 1 2 3 4	LIFT HEIGHT TO BOTTOM OF FORKS			
		4060 mm (159.8 in.)	4360 mm (171.7 in.)	4610 mm (181.5 in.)	4760 mm (187.4 in.)
	Mast Group Number	G508 4060	G508 4360	G508 4610	G508 4760
	Mast Assy	4691047	4691050	4691052	4691053
1	Intermediate Mast	4224751	4224751	4224752	4224753
10	Leaf Chain - Fixed Length	4250828	4250828	4250830	4250831
17	Lift Cylinder	4680798	4680801	4680803	4680804
20	Hose Assy	4675701	4675701	4675707	4675708

G508

ITEM	DESCRIPTION 1 2 3 4	LIFT HEIGHT TO BOTTOM OF FORKS			
		4910 mm (193.3 in.)	5060 mm (199.2 in.)	5210 mm (205.1 in.)	5510 mm (216.9 in.)
	Mast Group Number	G508 4910	G508 5060	G508 5210	G508 5510
	Mast Assy	4691054	4691055	4691056	4691058
1	Intermediate Mast	4224754	4224756	4224757	4224759
10	Leaf Chain - Fixed Length	4250832	4250835	4250836	4250839
17	Lift Cylinder	4680805	4680836	4680839	4680843
20	Hose Assy	4675709	4675711	4675712	4675714

G508

ITEM	DESCRIPTION 1 2 3 4	LIFT HEIGHT TO BOTTOM OF FORKS			
		5660 mm (222.8 in.)	6110 mm (240.6 in.)	6410 mm (252.4 in.)	6860 mm (270.1 in.)
	Mast Group Number	G508 5660	G508 6110	G508 6410	G508 6860
	Mast Assy	4691059	4691062	4691064	4691067
1	Intermediate Mast	4224761	4224764	4224767	4224771
10	Leaf Chain - Fixed Length	4250841	4250845	4250849	4250855
17	Lift Cylinder	4680845	4680852	4680858	4680864
20	Hose Assy	4675716	4675719	4675722	4675726

ITEM	PART NO.	DESCRIPTION	QTY
	a	Mast Assy	1

MAST ASSEMBLY

THREE STAGE FULL FREE-LIFT 2.0-2.5T (G508) – PAGE 2 OF 3

ITEM	PART NO.	DESCRIPTION	QTY
1	**a**	Intermediate Mast	1
2	4231443	Stubshaft	4
3	4253176	Shim	4
3	4253175	Shim (Optional)	4
4	104506	O-Ring	8
5	248212	Snap Ring	2
6	4253173	Wear Strip	4
7	4249502	Load Roller	2
7	4249501	Load Roller (Optional)	2
8	129387	Shim (0.020 in.)	AR
8	4263698	Shim (0.762 in.) (Optional)	AR
9	4249506	Load Roller	2
9	4249505	Load Roller (Optional)	2
10	**a**	Leaf Chain - Fixed Length	2
11	~~2056815~~		
	15224	Cotter Pin	2
11	15222	Cotter Pin (Alternate Part)	2
12	4242899	Pin	4
13	4253178	Chain Anchor	2
14	4185434	Capscrew	2
15	4242898	Shim	2
16	4242897	Shim	2
17	**a**	Lift Cylinder	2
18	**b** 4048782	Hose Sheave	1
18	**d** 4325658	Hose Sheave (Free Lift Supply)	1
19	**b** 4013267	Stubshaft	1
19	**d** 4360355	Stubshaft	1
20	**a**	Hose Assy	1
21	4187673	Capscrew	1
22	4252149	Bracket	1
23	4106301	Fitting	1
24	4700616	Hyd Velocity Fuse	1
25	302465	Roll Pin	2
26	**c** 4223285	Chain Sheave	2
26	**e** 4286492	Chain Sheave	2
27	**c** 4172274	Pin - Hose Sheave	2
27	**e** 4360354	Pin	2
28	**c** 1378691	Spacer	2
28	**e** 4356095	Spacer	2
29	**c** 4187789	Spacer	2
29	**e** 4244114	Spacer	2
30	2306942	Shim	2
31	4189066	Capscrew	2
32	4187690	Locknut	2
33	~~4309896~~		
	4369706	Spacer	2
33	~~4309896~~		
	4369706	Spacer (Alternate Part)	2
34	1333382	Washer (Mast Shim) (0.060 in.)	AR

See Service Manual for service procedures.
©2026 HYSTER COMPANY

FOOTNOTES:

a Refer to Table
b → 3/2023
c → 9/2022
d 3/2023 →
e 9/2022 →

MAST ASSEMBLY (FIGURE 20-3)

THREE STAGE FULL FREE-LIFT 2.0-2.5T (G508) — PAGE 3 OF 3

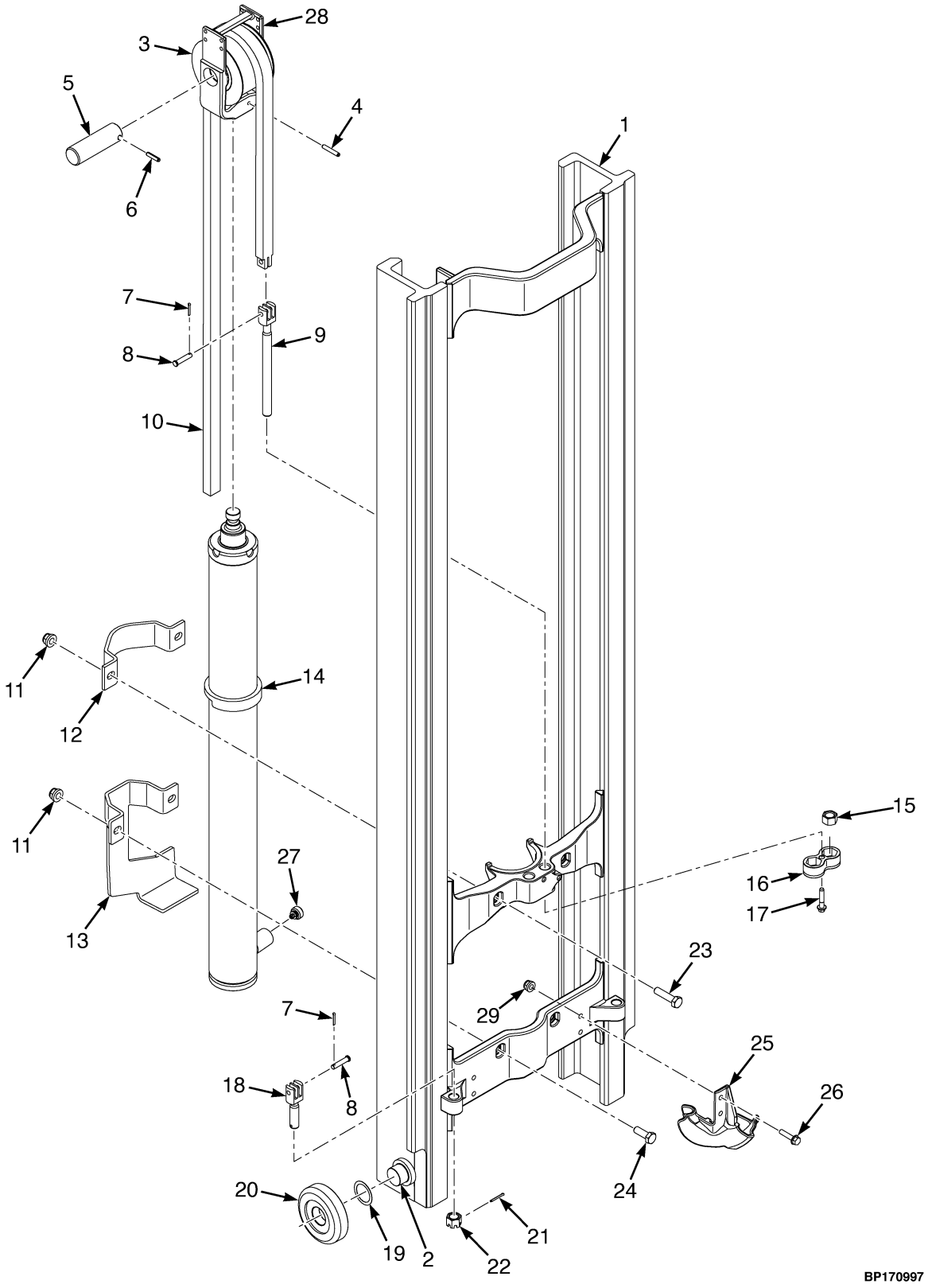

©2026 HYSTER COMPANY

MAST ASSEMBLY

THREE STAGE FULL FREE-LIFT 2.0-2.5T (G508) – PAGE 3 OF 3

G508

ITEM	DESCRIPTION 1 2 3 4	LIFT HEIGHT TO BOTTOM OF FORKS			
		4060 mm (159.8 in.)	4360 mm (171.7 in.)	4610 mm (181.5 in.)	4760 mm (187.4 in.)
	Mast Group Number	G508 4060	G508 4360	G508 4610	G508 4760
	Mast Assy	4691047	4691050	4691052	4691053
1	Inner Mast	4224851	4224851	4224852	4224853
10	Leaf Chain - Fixed Length	4250817	4250817	4250819	4250820
14	Cylinder Assy	4680810	4680810	4680811	4680812

G508

ITEM	DESCRIPTION 1 2 3 4	LIFT HEIGHT TO BOTTOM OF FORKS			
		4910 mm (193.3 in.)	5060 mm (199.2 in.)	5210 mm (205.1 in.)	5510 mm (216.9 in.)
	Mast Group Number	G508 4910	G508 5060	G508 5210	G508 5510
	Mast Assy	4691054	4691055	4691056	4691058
1	Inner Mast	4224854	4224856	4224857	4224859
10	Leaf Chain - Fixed Length	4250821	4250824	4250825	4250828
14	Cylinder Assy	4680813	4680815	4680817	4680820

G508

ITEM	DESCRIPTION 1 2 3 4	LIFT HEIGHT TO BOTTOM OF FORKS			
		5660 mm (222.8 in.)	6110 mm (240.6 in.)	6410 mm (252.4 in.)	6860 mm (270.1 in.)
	Mast Group Number	G508 5660	G508 6110	G508 6410	G508 6860
	Mast Assy	4691059	4691062	4691064	----
1	Inner Mast	4224861	4224864	4224867	4224871
10	Leaf Chain - Fixed Length	4250830	4250834	4250825	4250830
14	Cylinder Assy	4680822	4680827	4680835	4680841

ITEM	PART NO.	DESCRIPTION	QTY
	a	Mast Assy	1
1	**a**	Inner Mast	1
2	4231443	Stubshaft	2
3	4223287	Chain Sheave	1
4	302468	Roll Pin	1

©2026 HYSTER COMPANY

MAST ASSEMBLY

THREE STAGE FULL FREE-LIFT 2.0-2.5T (G508) – PAGE 3 OF 3

ITEM	PART NO.	DESCRIPTION	QTY
5	4172274	Pin - Hose Sheave	1
5	4341825	Pin (Alternate Part)	1
6	302465	Roll Pin	1
7	~~2056815~~		
	15224	Cotter Pin	4
7	15222	Cotter Pin (Alternate Part)	4
8	4242899	Pin	4
9	4253178	Chain Anchor	2
10	**a**	Leaf Chain - Fixed Length	2
11	4187692	Locknut	4
12	4057611	Clamp	1
13	4231398	Clamp	1
14	**a**	Cylinder Assy	1
15	4029443	Nut , Castle	2
16	4175491	Restraint - Chain Anchor nut, double	1
17	4133281	Capscrew	1
18	4253177	Chain Anchor	2
19	129387	Shim (0.020 in.)	AR
19	4263698	Shim (0.762 in.) (Optional)	AR
20	4249506	Load Roller	2
20	4249505	Load Roller (Optional)	2
21	~~2056815~~		
	15224	Cotter Pin	2
22	4219867	Nut , Castle	2
23	1581827	Capscrew	2
24	1596404	Capscrew	2
25	~~4682364~~		
	4730772	Bracket (FL Supply Support)	1
26	4185431	Capscrew	2
27	4055506	Flow Valve	1
28	4249630	Crosshead	1
29	4187690	Locknut	2

FOOTNOTES:

a Refer to Table

©2026 HYSTER COMPANY

MAIN LIFT CYLINDER (FIGURE 20-4)

THREE STAGE FULL FREE-LIFT — 2.0-2.5T (G508)

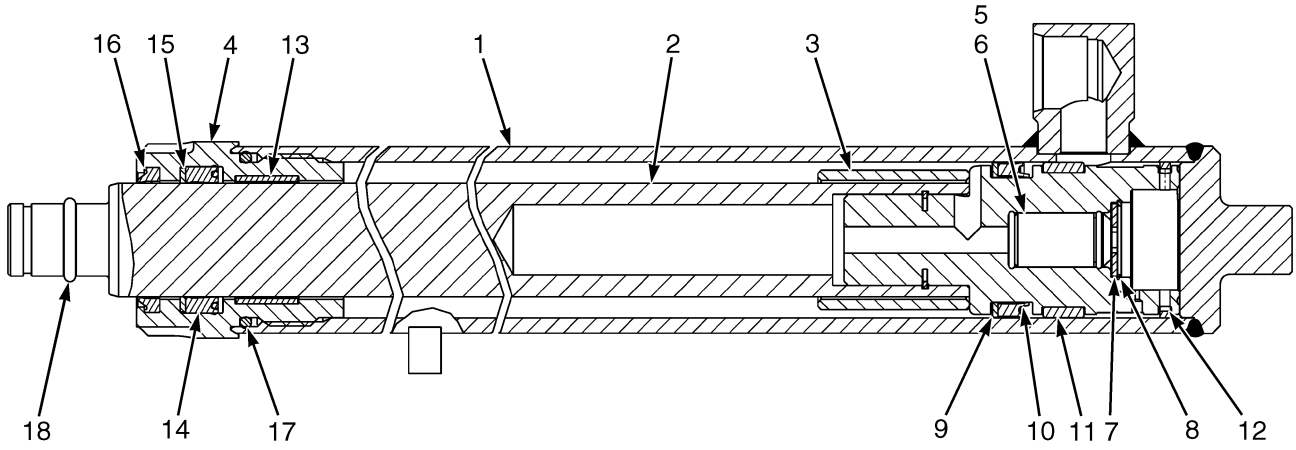

BP170987

MAIN LIFT CYLINDER

THREE STAGE FULL FREE-LIFT – 2.0-2.5T (G508)

G508

ITEM	DESCRIPTION 1 2 3 4	LIFT HEIGHT TO BOTTOM OF FORKS			
		4060 mm (159.8 in.)	**4360 mm (171.7 in.)**	**4610 mm (181.5 in.)**	**4760 mm (187.4 in.)**
	Mast Group Number	**G508 4060**	**G508 4360**	**G508 4610**	**G508 4760**
	Cylinder Group Number	**8608703**	**8608706**	**8608708**	**8608709**
	Lift Cylinder	4680798	4680801	4680803	4680804
1	Tube Wldmt-Cylinder	4250692	4250692	4250693	4250694
2	Rod Assy	4246572	4246572	4246573	4246574
3	Spacer	1356037	4133025	----	----

MAIN LIFT CYLINDER

THREE STAGE FULL FREE-LIFT – 2.0-2.5T (G508)

G508

ITEM	DESCRIPTION 1 2 3 4	LIFT HEIGHT TO BOTTOM OF FORKS			
		4910 mm (193.3 in.)	5060 mm (199.2 in.)	5210 mm (205.1 in.)	5510 mm (216.9 in.)
	Mast Group Number	G508 4910	G508 5060	G508 5210	G508 5510
	Cylinder Group Number	8608710	8608725	8608726	8608728
	Lift Cylinder	4680805	4680836	4680839	4680843
1	Tube Wldmt-Cylinder	4250695	4250697	4250698	4250700
2	Rod Assy	4246575	4246577	4246578	4246580
3	Spacer	----	1355610	1355610	1355610

G508

ITEM	DESCRIPTION 1 2 3 4	LIFT HEIGHT TO BOTTOM OF FORKS			
		5660 mm (222.8 in.)	6110 mm (240.6 in.)	6410 mm (252.4 in.)	6860 mm (270.1 in.)
	Mast Group Number	G508 5660	G508 6110	G508 6410	G508 6860
	Cylinder Group Number	8608729	8608732	8608734	8608737
	Lift Cylinder	4680845	4680852	4680858	4680864
1	Tube Wldmt-Cylinder	4250710	4250703	4250706	4250711
2	Rod Assy	----	4246583	4246586	4246591
3	Spacer	1355626	1355626	1355643	1355660

ITEM	PART NO.	DESCRIPTION	QTY
	a	Lift Cylinder	1
1	**a**	Tube Wldmt-Cylinder	1
2	**a**	Rod Assy	1
3	**a**	Spacer	1
4	4615847	Gland	1
5	257913	Check Valve	1
6	190580	O-Ring	1
7	297531	Washer	1
7	637635	Washer (Optional)	1
8	187388	Snap Ring	1
9	638246	Back-Up Ring	1
10	1381064	Piston Seal	1
11	1356750	Wear Ring	1
12	1360127	Piston Ring	1
13	322902	Wear Ring	1

See Service Manual for service procedures.
©2026 HYSTER COMPANY

MAIN LIFT CYLINDER

THREE STAGE FULL FREE-LIFT – 2.0-2.5T (G508)

ITEM	PART NO.	DESCRIPTION	QTY
14	1356749	Rod Seal	1
15	322824	Back-Up Ring	1
16	1383063	Rod Wiper	1
17	~~4028986~~		
	92861	O-Ring	1
18	60836	O-Ring	1
	4623973	Kit-Seal	1

FOOTNOTES:

a Refer to Table

FREE-LIFT CYLINDER (FIGURE 20-5)

THREE STAGE FULL FREE-LIFT — 2.0-2.5T (G508)

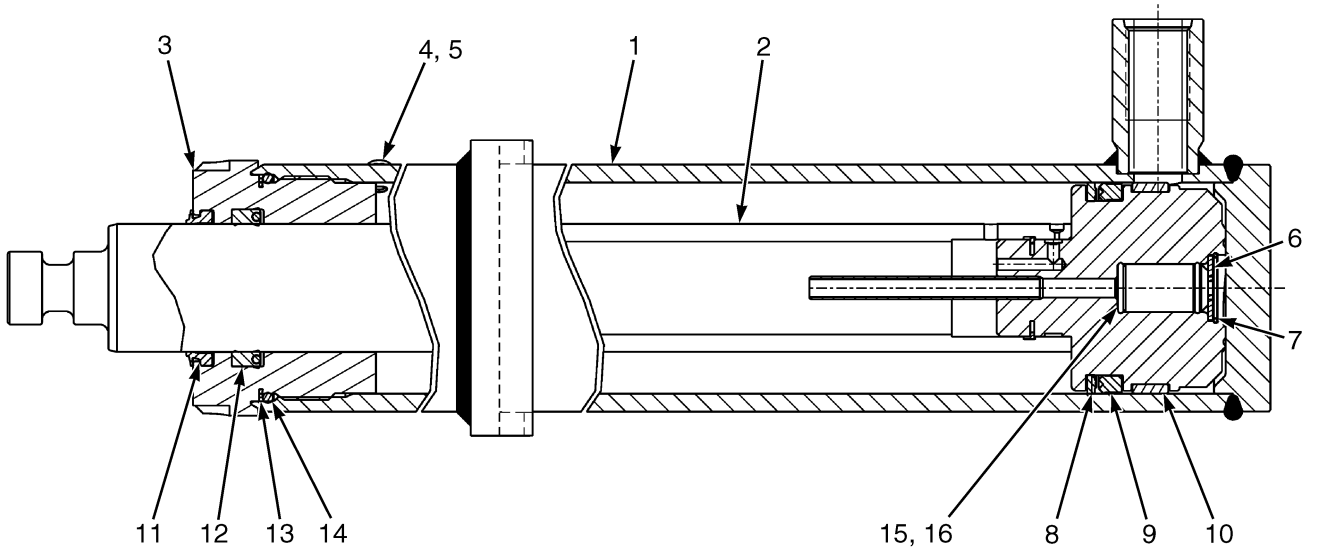

BP170992

FREE-LIFT CYLINDER

THREE STAGE FULL FREE-LIFT – 2.0-2.5T (G508)

G508

ITEM	DESCRIPTION 1 2 3 4	LIFT HEIGHT TO BOTTOM OF FORKS				
		4060 mm (159.8 in.)	4610 mm (181.5 in.)	4760 mm (187.4 in.)	4910 mm (193.3 in.)	5060 mm (199.2 in.)
	Mast Group Number	G508 4060	G508 4610	G508 4760	G508 4910	G508 5060
	Cylinder Group Number	8609601	8609602	8609603	8609604	8609606
	Cylinder Assy	4680810	4680811	4680812	4680813	4680815
1	Tube Wldmt-Cylinder	4251401	4251402	4251403	4251404	4251406
2	Cylinder Rod	4179933	4179934	4179935	4179936	4179937

©2026 HYSTER COMPANY

FREE-LIFT CYLINDER

THREE STAGE FULL FREE-LIFT – 2.0-2.5T (G508)

G508

ITEM	DESCRIPTION 1 2 3 4	LIFT HEIGHT TO BOTTOM OF FORKS				
		5210 mm (205.1 in.)	5510 mm (216.9 in.)	5660 mm (222.8 in.)	6110 mm (240.6 in.)	6410 mm (252.4 in.)
	Mast Group Number	G508 5210	G508 5510	G508 5660	G508 6110	G508 6410
	Cylinder Group Number	8609607	8609609	8609610	8609613	8609616
	Cylinder Assy	4680817	4680820	4680822	4680827	4680835
1	Tube Wldmt-Cylinder	4251407	4251409	4251410	4251413	4251416
2	Cylinder Rod	4179938	4179940	4179941	4179944	4179946

G508

ITEM	DESCRIPTION 1 2 3 4	LIFT HEIGHT TO BOTTOM OF FORKS
		6860 mm (270.1 in.)
	Mast Group Number	G508 6860
	Cylinder Group Number	8609620
	Cylinder Assy	4680841
1	Tube Wldmt-Cylinder	4251420
2	Cylinder Rod	4179949

ITEM	PART NO.	DESCRIPTION	QTY
	a	Cylinder Assy	1
1	**a**	Tube Wldmt-Cylinder	1
2	**a**	Cylinder Rod	1
3	~~4601465~~		
	4719149	Gland	1
4	190887	Sealing Ring	1
5	1361302	Screw	1
5	4363244	Capscrew (Optional)	1
6	297531	Washer	1
6	637635	Washer (Optional)	1
7	187388	Snap Ring	1
8	2013089	Back-Up Ring	1
9	2013088	Rod Seal	1
10	1358972	Wear Ring	1
11	1464001	Rod Wiper	1
11	1463108	Rod Wiper (Alternate Part)	1
12	1622946	Rod Seal	1

©2026 HYSTER COMPANY

FREE-LIFT CYLINDER

THREE STAGE FULL FREE-LIFT – 2.0-2.5T (G508)

ITEM	PART NO.	DESCRIPTION	QTY
13	147973	Back-Up Ring	1
14	90263	O-Ring	1
15	257913	Check Valve	1
16	190580	O-Ring	1
	4681457	Kit-Seal	1

FOOTNOTES:

a Refer to Table

©2026 HYSTER COMPANY

NOTES

MAST ASSEMBLY (FIGURE 20-6)

THREE STAGE FULL FREE-LIFT 3.0-3.5T (G563) — PAGE 1 OF 3

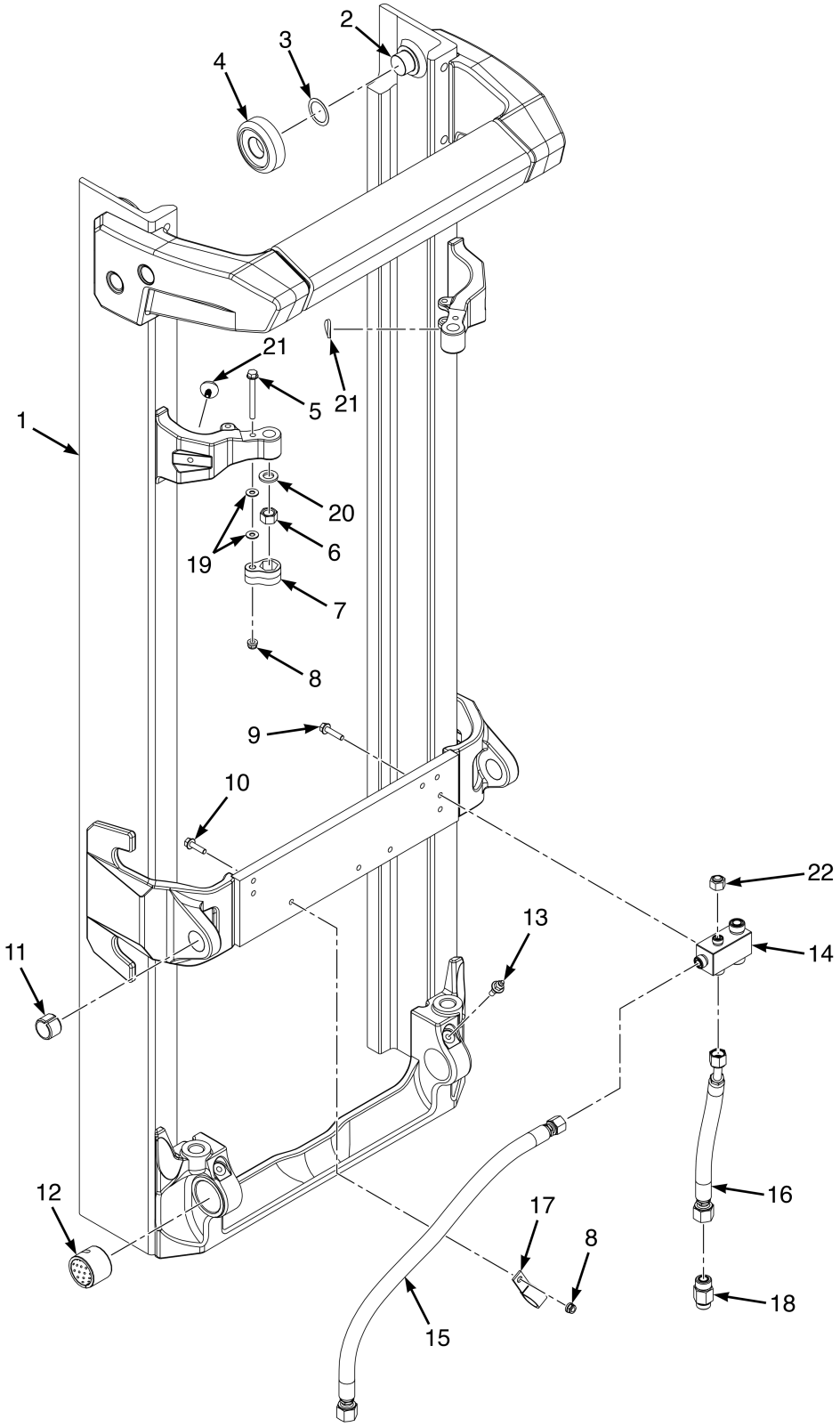

©2026 HYSTER COMPANY

MAST ASSEMBLY

THREE STAGE FULL FREE-LIFT 3.0-3.5T (G563) – PAGE 1 OF 3

G563

ITEM	DESCRIPTION 1 2 3 4	LIFT HEIGHT TO BOTTOM OF FORKS				
		3968 mm (156.2 in.)	4268 mm (168.0 in.)	4418 mm (173.9 in.)	4568 mm (179.8 in.)	4718 mm (185.7 in.)
	Mast Group Number	G563 3968	G563 4268	G563 4418	G563 4568	G563 4718
	Mast Assy	4691083	4691085	4691086	4691087	4691088
1	Outer Mast	4224651	4224652	4224653	4224654	4224656

G563

ITEM	DESCRIPTION 1 2 3 4	LIFT HEIGHT TO BOTTOM OF FORKS				
		4868 mm (191.7 in.)	5018 mm (197.6 in.)	5168 mm (203.5 in.)	5318 mm (209.4 in.)	5468 mm (215.3 in.)
	Mast Group Number	G563 4868	G563 5018	G563 5168	G563 5318	G563 5468
	Mast Assy	4691089	4691090	4691091	4691092	4691093
1	Outer Mast	4224657	4224658	4224659	4224661	4224662

G563

ITEM	DESCRIPTION 1 2 3 4	LIFT HEIGHT TO BOTTOM OF FORKS			
		5768 mm (227.1 in.)	6068 mm (238.9 in.)	6518 mm (256.6 in.)	6968 mm (274.3 in.)
	Mast Group Number	G563 5768	G563 6068	G563 6518	G563 6968
	Mast Assy	4691095	4691097	4691100	4691103
1	Outer Mast	4224664	4224667	4224671	4224674

ITEM	PART NO.	DESCRIPTION	QTY
	a	Mast Assy	1
1	**a**	Outer Mast	1
2	4231443	Stubshaft	2
3	129387	Shim (0.020 in.)	AR
4	4249502	Load Roller	2
4	4249501	Load Roller (Optional)	2
5	4185433	Capscrew	2
6	4029443	Nut , Castle	2
7	4145952	Restraint	2
8	4187690	Locknut	2
9	4185431	Capscrew	4
10	4185430	Capscrew	1
11	300982	Bushing	2
12	4033414	Bushing	2
13	4269502	Capscrew (Lube)	2
13	16010	Grease Fitting	1
14	4245292	Manifold - Mast Connection Block	1

©2026 HYSTER COMPANY

MAST ASSEMBLY

THREE STAGE FULL FREE-LIFT 3.0-3.5T (G563) – PAGE 1 OF 3

ITEM	PART NO.	DESCRIPTION	QTY
15	4700253	Hose Assy	1
16	4700254	Hose Assy	1
17	1310611	Clamp	1
18	4700616	Hyd Velocity Fuse	1
19	**b** 1581851	Washer	4
20	**b** 1581854	Washer	2
21	4176370	Rubber Pad	2
22	1529015	Cap (w/o Accumulator)	1

FOOTNOTES:

a Refer to Table

b → PENDING PER ECN 16122952

©2026 HYSTER COMPANY

NOTES

MAST ASSEMBLY (FIGURE 20-7)

THREE STAGE FULL FREE-LIFT 3.0-3.5T (G563) — PAGE 2 OF 3

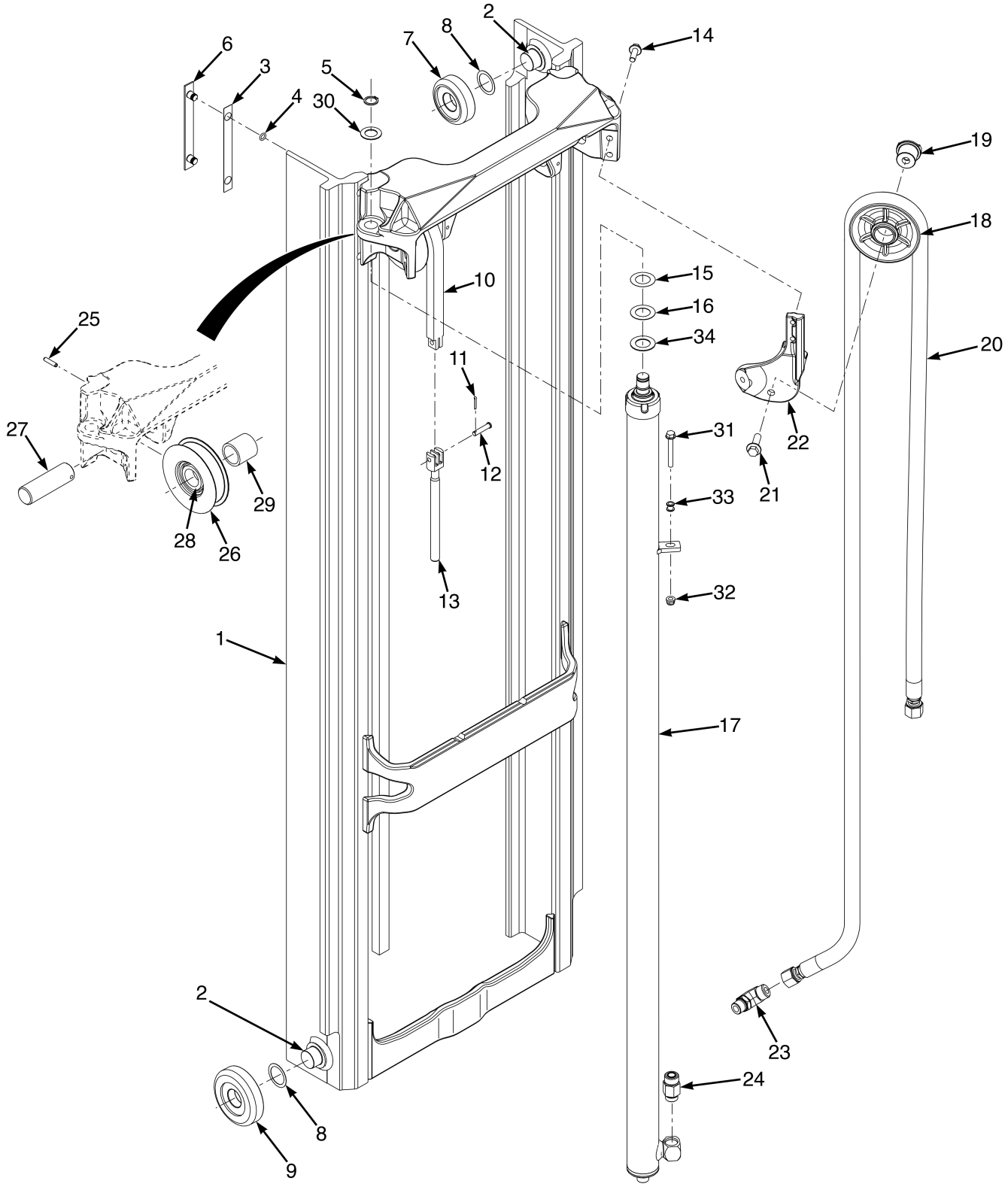

©2026 HYSTER COMPANY

MAST ASSEMBLY

THREE STAGE FULL FREE-LIFT 3.0-3.5T (G563) – PAGE 2 OF 3

G563

ITEM	DESCRIPTION 1 2 3 4	LIFT HEIGHT TO BOTTOM OF FORKS				
		3968 mm (156.2 in.)	4268 mm (168.0 in.)	4418 mm (173.9 in.)	4568 mm (179.8 in.)	4718 mm (185.7 in.)
	Mast Group Number	G563 3968	G563 4268	G563 4418	G563 4568	G563 4718
	Mast Assy	4691083	4691085	4691086	4691087	4691088
1	Intermediate Mast	4224751	4224752	4224753	4224754	4224756
10	Leaf Chain - Fixed Length	4250928	4250930	4250931	4250932	4250935
17	Lift Cylinder	4681011	4681013	4681014	4681015	4681016
20	Hose Assy	4675766	4675771	4675772	4675773	4675775

G563

ITEM	DESCRIPTION 1 2 3 4	LIFT HEIGHT TO BOTTOM OF FORKS				
		4868 mm (191.7 in.)	5018 mm (197.6 in.)	5168 mm (203.5 in.)	5318 mm (209.4 in.)	5468 mm (215.3 in.)
	Mast Group Number	G563 4868	G563 5018	G563 5168	G563 5318	G563 5468
	Mast Assy	4691089	4691090	4691091	4691092	4691093
1	Intermediate Mast	4224757	4224758	4224759	4224761	4224762
10	Leaf Chain - Fixed Length	4250936	4250938	4250939	4250941	4250943
17	Lift Cylinder	4681017	4681018	4681019	4681020	4681021
20	Hose Assy	4675776	4675777	4675778	4675780	4675781

G563

ITEM	DESCRIPTION 1 2 3 4	LIFT HEIGHT TO BOTTOM OF FORKS			
		5768 mm (227.1 in.)	6068 mm (238.9 in.)	6518 mm (256.6 in.)	6968 mm (274.3 in.)
	Mast Group Number	G563 5768	G563 6068	G563 6518	G563 6968
	Mast Assy	4691095	4691097	4691100	4691103
1	Intermediate Mast	4224764	4224767	4224771	4224774
10	Leaf Chain - Fixed Length	4250945	4250949	4250955	4250959
17	Lift Cylinder	4681023	4681025	4681028	4681056
20	Hose Assy	4675783	4675786	4675790	4675793

ITEM	PART NO.	DESCRIPTION	QTY
	a	Mast Assy	1

MAST ASSEMBLY

THREE STAGE FULL FREE-LIFT 3.0-3.5T (G563) – PAGE 2 OF 3

ITEM	PART NO.	DESCRIPTION	QTY
1	**a**	Intermediate Mast	1
2	4231443	Stubshaft	4
3	4253176	Shim	4
3	4253175	Shim (Optional)	4
4	104506	O-Ring	8
5	248212	Snap Ring	2
6	4253173	Wear Strip	4
7	4249502	Load Roller	2
7	4249501	Load Roller (Optional)	2
8	129387	Shim (0.020 in.)	AR
9	4249506	Load Roller	2
9	4249505	Load Roller (Optional)	2
10	**a**	Leaf Chain - Fixed Length	2
11	~~2056815~~		
	15224	Cotter Pin	2
11	15222	Cotter Pin (Alternate Part)	2
12	4242899	Pin	4
13	4253420	Chain Anchor	2
14	4185434	Capscrew	2
15	4242898	Shim	2
16	4242897	Shim	2
17	**a**	Lift Cylinder	2
18	**b** 4048782	Hose Sheave	1
18	**c** 4325658	Hose Sheave (Free Lift Supply)	1
19	**b** 4013267	Stubshaft	1
19	**c** 4360355	Stubshaft	1
20	**a**	Hose Assy	1
21	4187673	Capscrew	1
22	4252149	Bracket	1
23	4106301	Fitting	1
24	4700616	Hyd Velocity Fuse	1
25	302465	Roll Pin	2
26	4223286	Chain Sheave	2
27	**b** 4172274	Pin - Hose Sheave	2
27	**c** 4360354	Pin	2
28	1378691	Spacer	2
29	4187789	Spacer	2
30	2306942	Shim	2
31	4189066	Capscrew	2
32	4187690	Locknut	2
33	~~4309896~~		
	4369706	Spacer	2
33	~~4309896~~		
	4369706	Spacer (Alternate Part)	2
34	1333382	Washer (Mast Shim) (0.060 in.)	AR

FOOTNOTES:

a Refer to Table
b → 3/2023
c 3/2023 →

©2026 HYSTER COMPANY

NOTES

MAST ASSEMBLY (FIGURE 20-8)

THREE STAGE FULL FREE-LIFT 3.0-3.5T (G563) — PAGE 3 OF 3

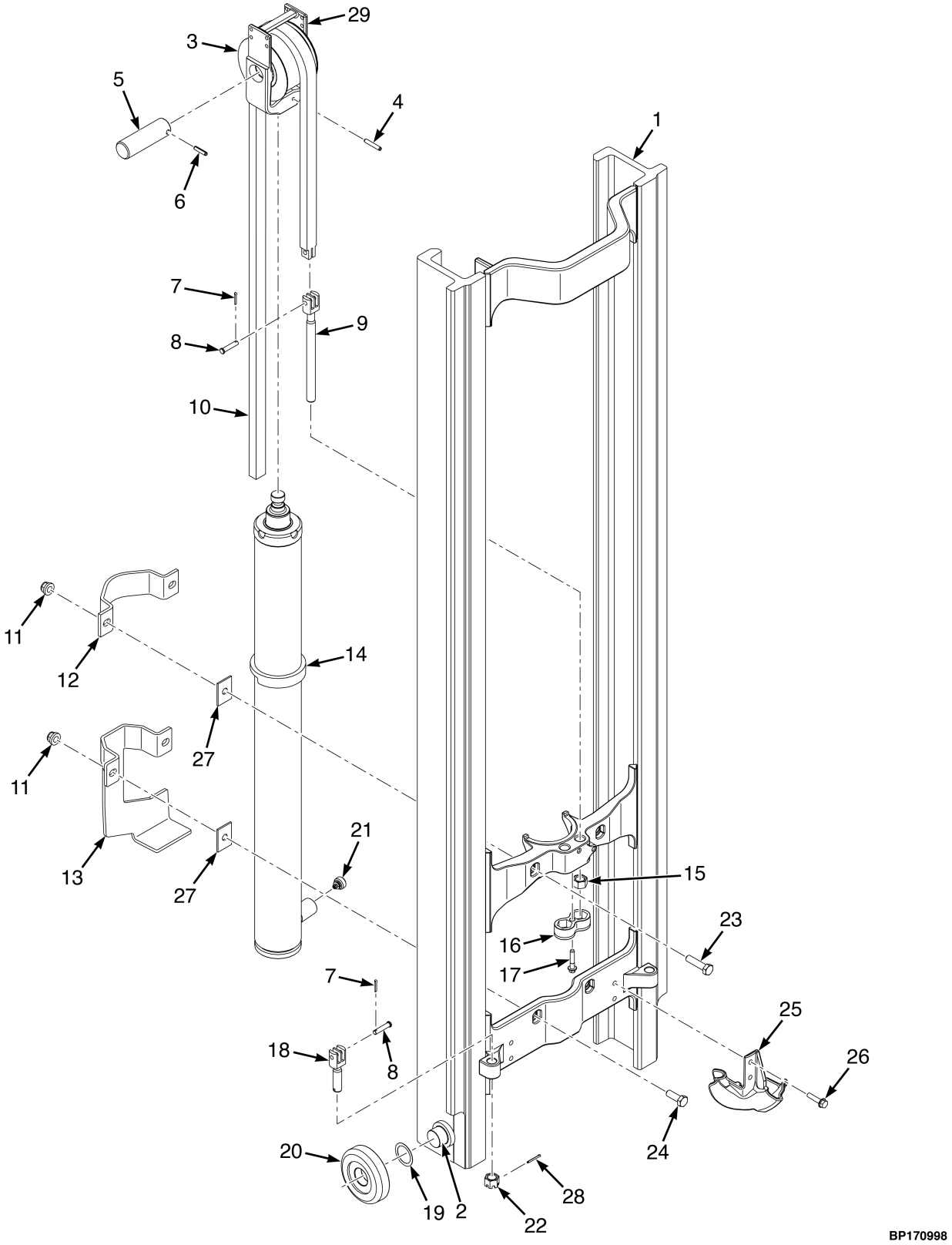

©2026 HYSTER COMPANY

MAST ASSEMBLY

THREE STAGE FULL FREE-LIFT 3.0-3.5T (G563) – PAGE 3 OF 3

G563

ITEM	DESCRIPTION 1 2 3 4	LIFT HEIGHT TO BOTTOM OF FORKS				
		3968 mm (156.2 in.)	4268 mm (168.0 in.)	4418 mm (173.9 in.)	4568 mm (179.8 in.)	4718 mm (185.7 in.)
	Mast Group Number	G563 3968	G563 4268	G563 4418	G563 4568	G563 4718
	Mast Assy	4691083	4691085	4691086	4691087	4691088
1	Inner Mast	4224851	4224852	4224853	4224854	4224856
10	Leaf Chain - Fixed Length	4250917	4250919	4250920	4250921	4250924
14	Cylinder Assy	4681931	4681932	4681933	4681934	4681936

G563

ITEM	DESCRIPTION 1 2 3 4	LIFT HEIGHT TO BOTTOM OF FORKS				
		4868 mm (191.7 in.)	5018 mm (197.6 in.)	5168 mm (203.5 in.)	5318 mm (209.4 in.)	5468 mm (215.3 in.)
	Mast Group Number	G563 4868	G563 5018	G563 5168	G563 5318	G563 5468
	Mast Assy	4691089	4691090	4691091	4691092	4691093
1	Inner Mast	4224857	4224858	4224859	4224861	4224862
10	Leaf Chain - Fixed Length	4250925	4250927	4250928	4250930	4250932
14	Cylinder Assy	4681937	4681938	4681939	4681940	4681941

G563

ITEM	DESCRIPTION 1 2 3 4	LIFT HEIGHT TO BOTTOM OF FORKS			
		5768 mm (227.1 in.)	6068 mm (238.9 in.)	6518 mm (256.6 in.)	6968 mm (274.3 in.)
	Mast Group Number	G563 5768	G563 6068	G563 6518	G563 6968
	Mast Assy	4691095	4691097	4691100	4691103
1	Inner Mast	4224864	4224867	4224871	4224874
10	Leaf Chain - Fixed Length	4250934	4250925	4250930	4250934
14	Cylinder Assy	4681943	4680879	4680883	4680886

ITEM	PART NO.	DESCRIPTION	QTY
	a	Mast Assy	1
1	**a**	Inner Mast	1
2	4231443	Stubshaft	2
3	4223287	Chain Sheave	1
4	302468	Roll Pin	1

MAST ASSEMBLY

THREE STAGE FULL FREE-LIFT 3.0-3.5T (G563) – PAGE 3 OF 3

ITEM	PART NO.	DESCRIPTION	QTY
5	4172274	Pin - Hose Sheave	1
5	4341825	Pin (Alternate Part)	1
6	302465	Roll Pin	1
7	~~2056815~~		
	15224	Cotter Pin	4
7	15222	Cotter Pin (Alternate Part)	4
8	4242899	Pin	4
9	4253420	Chain Anchor	2
10	**a**	Leaf Chain - Fixed Length	2
11	4187692	Locknut	4
12	4057611	Clamp	1
13	4231398	Clamp	1
14	**a**	Cylinder Assy	1
15	4029443	Nut , Castle	2
16	4175491	Restraint - Chain Anchor nut, double	1
17	4133281	Capscrew	1
18	4253180	Chain Anchor	2
19	129387	Shim (0.020 in.)	AR
20	4249506	Load Roller	2
20	4249505	Load Roller (Optional)	2
21	4291253	Flow Valve - Hose Burst Control	1
22	4219867	Nut , Castle	2
23	1581827	Capscrew	2
24	1596404	Capscrew	2
25	~~4682364~~		
	4730772	Bracket (FL Supply Support)	1
26	4185431	Capscrew	2
27	1354902	Spacer	4
28	~~2056815~~		
	15224	Cotter Pin	2
29	4249630	Crosshead	1

FOOTNOTES:

a Refer to Table

©2026 HYSTER COMPANY

MAIN LIFT CYLINDER (FIGURE 20-9)

THREE STAGE FULL FREE-LIFT — 3.0-3.5T (G563)

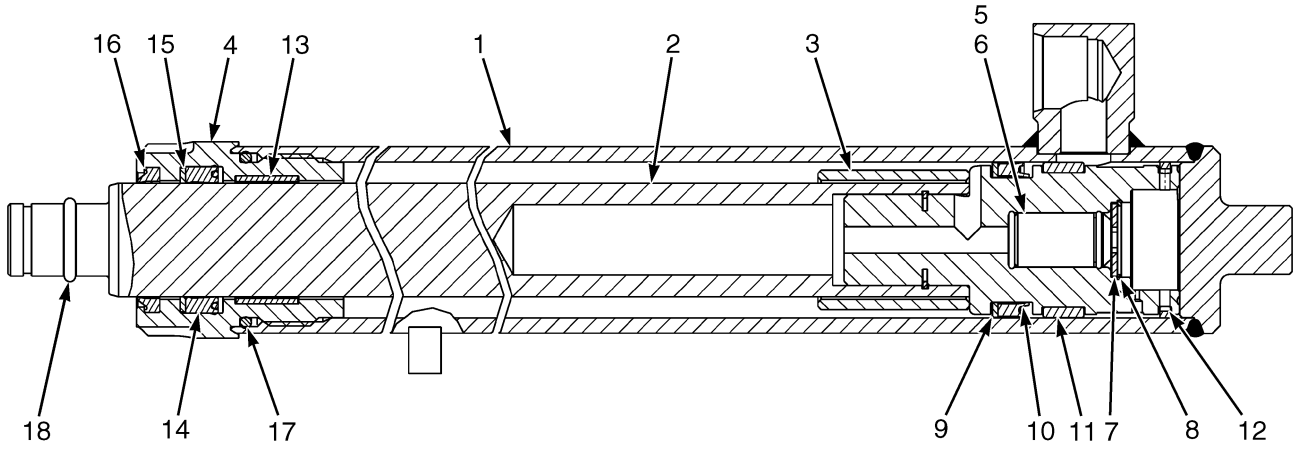

BP170987

MAIN LIFT CYLINDER

THREE STAGE FULL FREE-LIFT – 3.0-3.5T (G563)

G563

ITEM	DESCRIPTION 1 2 3 4	LIFT HEIGHT TO BOTTOM OF FORKS				
		3968 mm (156.2 in.)	4268 mm (168.0 in.)	4418 mm (173.9 in.)	4568 mm (179.8 in.)	4718 mm (185.7 in.)
	Mast Group Number	G563 3968	G563 4268	G563 4418	G563 4568	G563 4718
	Cylinder Group Number	8608821	8608823	8608824	8608825	8608826
	Lift Cylinder	4681011	4681013	4681014	4681015	4681016
1	Tube Wldmt-Cylinder	4250741	4250742	4250743	4250744	4250746
2	Rod Assy	4246631	4246632	4246633	4246634	4246636
3	Spacer	2073087	2046164	2046164	2046164	2073087

MAIN LIFT CYLINDER

THREE STAGE FULL FREE-LIFT – 3.0-3.5T (G563)

G563

ITEM	DESCRIPTION 1 2 3 4	LIFT HEIGHT TO BOTTOM OF FORKS				
		4868 mm (191.7 in.)	5018 mm (197.6 in.)	5168 mm (203.5 in.)	5318 mm (209.4 in.)	5468 mm (215.3 in.)
	Mast Group Number	G563 4868	G563 5018	G563 5168	G563 5318	G563 5468
	Cylinder Group Number	8608827	8608828	8608829	8608830	8608831
	Lift Cylinder	4681017	4681018	4681019	4681020	4681021
1	Tube Wldmt-Cylinder	4250747	4250748	4250749	4250753	4250750
2	Rod Assy	4246637	4246638	4246639	4246643	4246640
3	Spacer	2073087	2073087	2073087	2077818	2077818

G563

ITEM	DESCRIPTION 1 2 3 4	LIFT HEIGHT TO BOTTOM OF FORKS			
		5768 mm (227.1 in.)	6068 mm (238.9 in.)	6518 mm (256.6 in.)	6968 mm (274.3 in.)
	Mast Group Number	G563 5768	G563 6068	G563 6518	G563 6968
	Cylinder Group Number	8608833	8608835	8608838	8608871
	Lift Cylinder	4681023	4681025	4681028	4681056
1	Tube Wldmt-Cylinder	4250752	4250755	4250758	4250776
2	Rod Assy	4246642	4246645	4246648	4246668
3	Spacer	2077818	4658087	2077819	4658562

ITEM	PART NO.	DESCRIPTION	QTY
	a	Lift Cylinder	1
1	**a**	Tube Wldmt-Cylinder	1
2	**a**	Rod Assy	1
3	**a**	Spacer	1
4	4615848	Gland	1
5	257913	Check Valve	1
6	190580	O-Ring	1
7	297531	Washer	1
7	637635	Washer (Optional)	1
8	187388	Snap Ring	1
9	335012	Back-Up Ring	1
10	1381063	Piston Seal	1
11	1356751	Wear Ring	1
12	1356748	Piston Ring	1
13	**c** 1380570	Wear Ring	1

See Service Manual for service procedures.
©2026 HYSTER COMPANY

MAIN LIFT CYLINDER

THREE STAGE FULL FREE-LIFT – 3.0-3.5T (G563)

ITEM	PART NO.	DESCRIPTION	QTY
13	322902	Wear Ring	1
14	1356749	Rod Seal	1
14	**c** 1356752	Rod Seal	1
15	**b** 322824	Back-Up Ring	1
16	1383063	Rod Wiper	1
16	**c** 1383064	Rod Wiper	1
17	59229	O-Ring	1
18	60836	O-Ring	1
	b 4623974	Kit-Seal	1
	c 4625475	Kit-Seal	1

FOOTNOTES:

a Refer to Table
b Used on 3968-6518mm.
c Used on 6968mm only.

FREE-LIFT CYLINDER (FIGURE 20-10)

THREE STAGE FULL FREE-LIFT — 3.0-3.5T (G563)

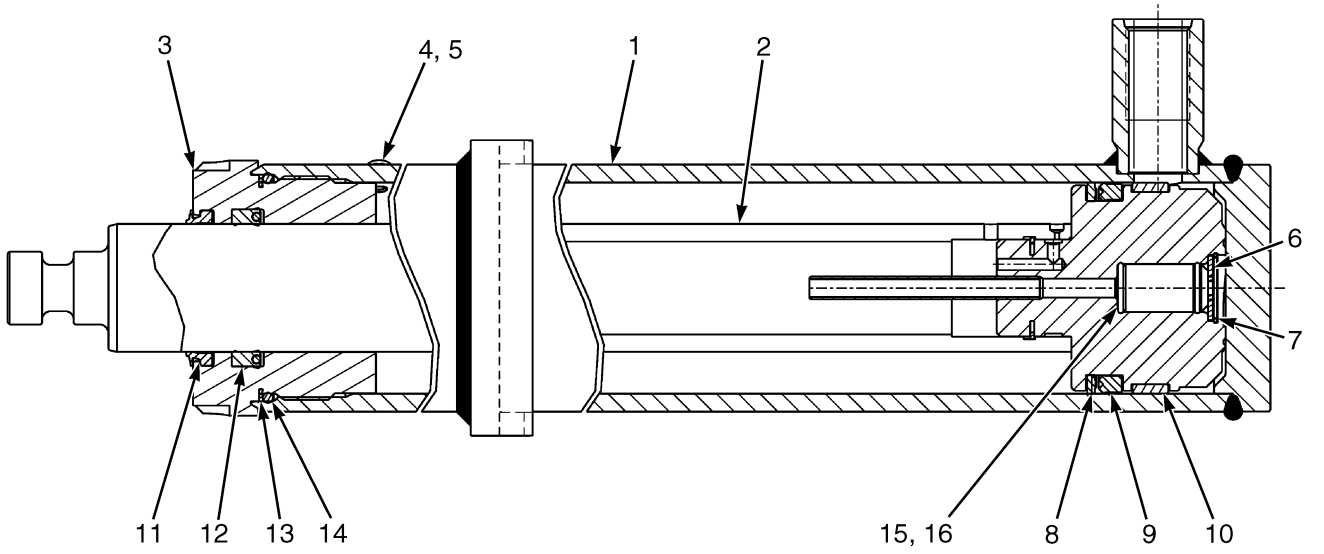

BP170992

FREE-LIFT CYLINDER

THREE STAGE FULL FREE-LIFT – 3.0-3.5T (G563)

G563

ITEM	DESCRIPTION 1 2 3 4	LIFT HEIGHT TO BOTTOM OF FORKS				
		3968 mm (156.2 in.)	4268 mm (168.0 in.)	4418 mm (173.9 in.)	4568 mm (179.8 in.)	4718 mm (185.7 in.)
	Mast Group Number	G563 3968	G563 4268	G563 4418	G563 4568	G563 4718
	Cylinder Group Number	8609701	8609702	8609703	8609704	8609706
	Cylinder Assy	4681931	4681932	4681933	4681934	4681936
1	Tube Wldmt-Cylinder	4251351	4251352	4251353	4251354	4251356
2	Cylinder Rod	4180013	4180014	4180015	4180016	4180017

©2026 HYSTER COMPANY

FREE-LIFT CYLINDER

THREE STAGE FULL FREE-LIFT – 3.0-3.5T (G563)

G563

ITEM	DESCRIPTION 1 2 3 4	LIFT HEIGHT TO BOTTOM OF FORKS				
		4868 mm (191.7 in.)	5018 mm (197.6 in.)	5168 mm (203.5 in.)	5318 mm (209.4 in.)	5468 mm (215.3 in.)
	Mast Group Number	G563 4868	G563 5018	G563 5168	G563 5318	G563 5468
	Cylinder Group Number	8609707	8609708	8609709	8609710	8609711
	Cylinder Assy	4681937	4681938	4681939	4681940	4681941
1	Tube Wldmt-Cylinder	4251357	4251358	4251359	4251360	4251361
2	Cylinder Rod	4180018	4180019	4180020	4180021	4180022

G563

ITEM	DESCRIPTION 1 2 3 4	LIFT HEIGHT TO BOTTOM OF FORKS			
		5768 mm (227.1 in.)	6068 mm (238.9 in.)	6518 mm (256.6 in.)	6968 mm (274.3 in.)
	Mast Group Number	G563 5768	G563 6068	G563 6518	G563 6968
	Cylinder Group Number	8609713	8609716	8609720	8609723
	Cylinder Assy	4681943	4680879	4680883	4680886
1	Tube Wldmt-Cylinder	4251363	4251366	4251370	4251373
2	Cylinder Rod	4180024	4180026	4180029	4180032

ITEM	PART NO.	DESCRIPTION	QTY
	a	Cylinder Assy	1
1	**a**	Tube Wldmt-Cylinder	1
2	**a**	Cylinder Rod	1
3	4601463	Gland	1
4	190887	Sealing Ring	1
5	1361302	Screw	1
6	297531	Washer	1
6	637635	Washer (Optional)	1
7	187388	Snap Ring	1
8	4248918	Back-UP Ring	1
9	4248915	Seal , Rod	1
10	636941	Wear Ring	1
11	1464001	Rod Wiper	1
11	1463108	Rod Wiper (Alternate Part)	1
12	1622946	Rod Seal	1
13	164840	Back-Up Ring	1
14	15880	O-Ring	1
15	297538	Check Valve	1

©2026 HYSTER COMPANY

FREE-LIFT CYLINDER

THREE STAGE FULL FREE-LIFT – 3.0-3.5T (G563)

ITEM	PART NO.	DESCRIPTION	QTY
16	190580	O-Ring	1
	4681458	Kit-Seal	1

FOOTNOTES:

a Refer to Table

©2026 HYSTER COMPANY

NOTES

CARRIAGE (FIGURE 20-11)

INTEGRAL SIDE-SHIFT — THREE STAGE FULL FREE-LIFT

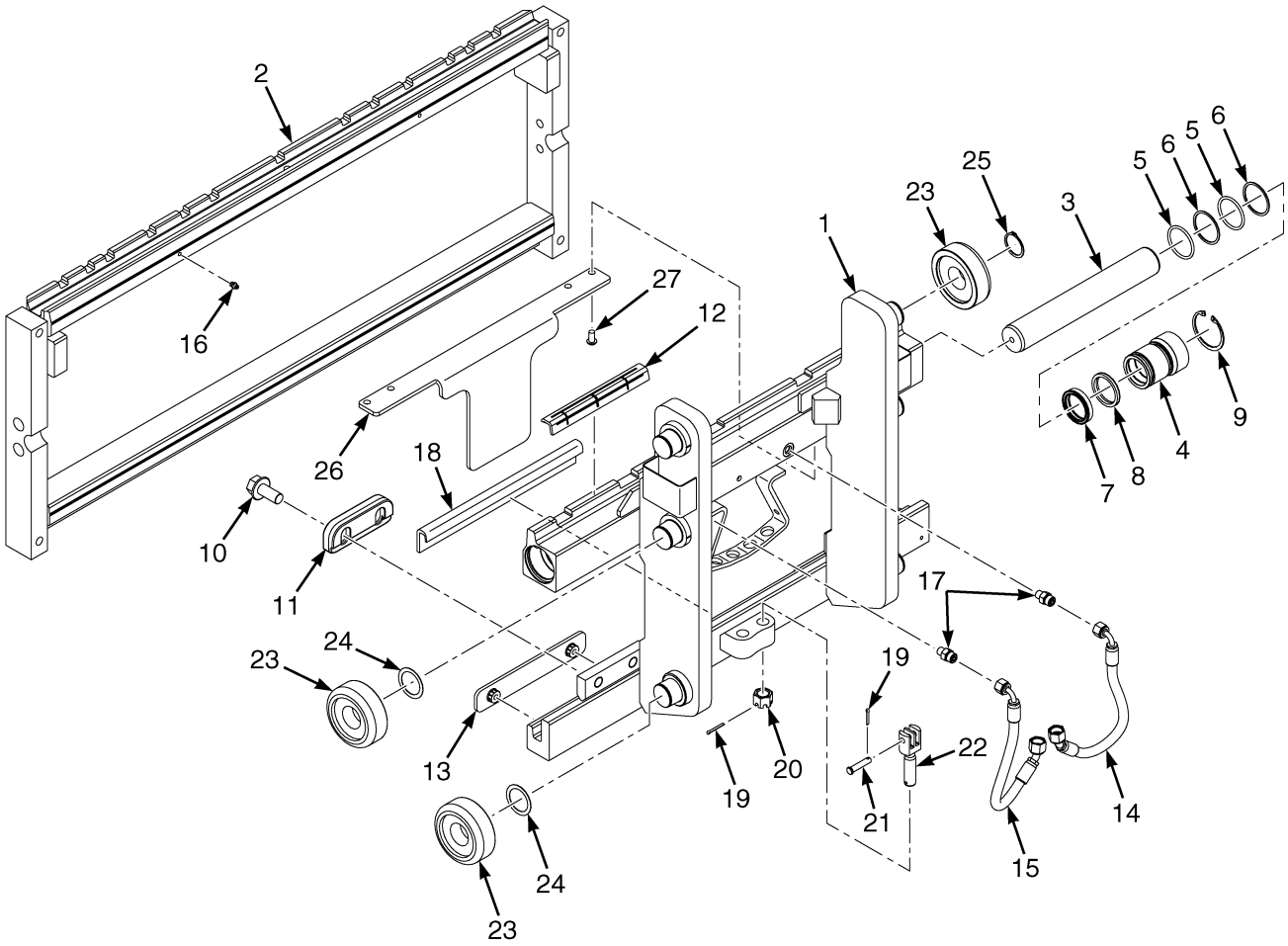

©2026 HYSTER COMPANY

CARRIAGE

INTEGRAL SIDE-SHIFT – THREE STAGE FULL FREE-LIFT

KEY:
A: Class II
B: Class III

ITEM	PART NO.	DESCRIPTION	QTY A	QTY B
	4676869	Side-Shift Carriage - ISS, Class II	1	..
	4695338	Side-Shift Carriage - ISS, Class II, Large Tire	1	..
	4687990	Side-Shift Carriage - ISS, Class III (1067mm)	..	1
	4687991	Side-Shift Carriage - ISS, Class III (1220mm)	..	1
	4687992	Side-Shift Carriage - ISS, Class III (1372mm)	..	1
1	4243023	Carriage Wldmt	1	..
1	4265340	Carriage Wldmt - Large Tire	1	..
1	4243026	Carriage Wldmt - ISS, Class III (1067mm)	..	1
1	4243027	Carriage Wldmt - ISS, Class III (1220mm)	..	1
1	4243028	Carriage Wldmt - ISS, Class III (1372mm)	..	1
1	4258594	Stubshaft	6	6
2	4330059	Frame (42in)	1	..
2	4330083	Frame (42in) (1067mm)	..	1
2	4330084	Frame (48in) (1219mm)	..	1
2	4330085	Frame (54in) (1372mm)	..	1
3	4090982	Cylinder Rod	2	..
3	4090984	Cylinder Rod	..	2
4	4215251	Gland Assembly	2	..
4	4215095	Gland	1	..
4	4217294	Kit-Seal	1	..
4	4215252	Gland (Assembly) (Class III)	..	1
4	4215096	Gland	..	1
4	4217295	Kit-Seal	..	1
5	55407	O-Ring	4	..
5	~~4028986~~			
	92861	O-Ring	..	4
6	153919	Back-Up Ring	4	..
6	147972	Back-Up Ring	..	4
7	2032488	Seal	2	..
7	378440	Seal	..	2
8	1383064	Rod Wiper	2	..
8	1383065	Rod Wiper	..	2
9	128444	Snap Ring	2	..
9	304552	Snap Ring	..	2
10	4239917	Capscrew	4	4
11	4687153	Hook (Lower)	2	2
12	4693335	Bearing (Upper)	2	2
13	4693334	Bearing (Lower)	2	2
14	4711993	Hose Assy	1	..
14	4684781	Hose Assy	..	1
15	4711992	Hose Assy	1	..
15	4684780	Hose Assy	..	1
16	4318979	Grease Fitting	2	2
17	4116399	Fitting , Straight	2	2
18	4292621	Bearing - Strip Lower Carriage Bar (1067mm)	1	1

©2026 HYSTER COMPANY

CARRIAGE

INTEGRAL SIDE-SHIFT – THREE STAGE FULL FREE-LIFT

KEY:
A: Class II
B: Class III

ITEM	PART NO.	DESCRIPTION	QTY A	QTY B
18	4292622	Bearing - Strip Lower Carriage Bar (1220mm)	..	1
18	4292623	Bearing - Strip Lower Carriage Bar (1375mm)	..	1
19	~~2056815~~			
	15224	Cotter Pin	4	4
20	4219867	Nut , Castle	2	2
21	4242899	Pin	2	2
22	4253177	Chain Anchor	2	..
22	4253180	Chain Anchor	..	2
23	1333399	Load Roller ("B") (3.63 in./3.62 in.)	6	6
23	1395169	Load Roller ("A") (3.61 in./3.60 in.) (Optional)	6	6
23	1337900	Load Roller ("C") (3.67 in./3.66 in.) (Optional)	6	6
24	129387	Shim (0.020 in.)	12	12
24	4263698	Shim (0.762 in.) (Optional)	12	12
25	58901	Snap Ring	2	2
26	**a** 4280189	Bracket - Center Protection (Hose Guard)	1	..
26	**a** 4280190	Bracket - Center Protection (Hose Guard)	..	1
27	**a** 296165	Capscrew	4	4

FOOTNOTES:

a MFG Option

©2026 HYSTER COMPANY

NOTES

CARRIAGE (FIGURE 20-12)
STANDARD — THREE STAGE FULL FREE-LIFT

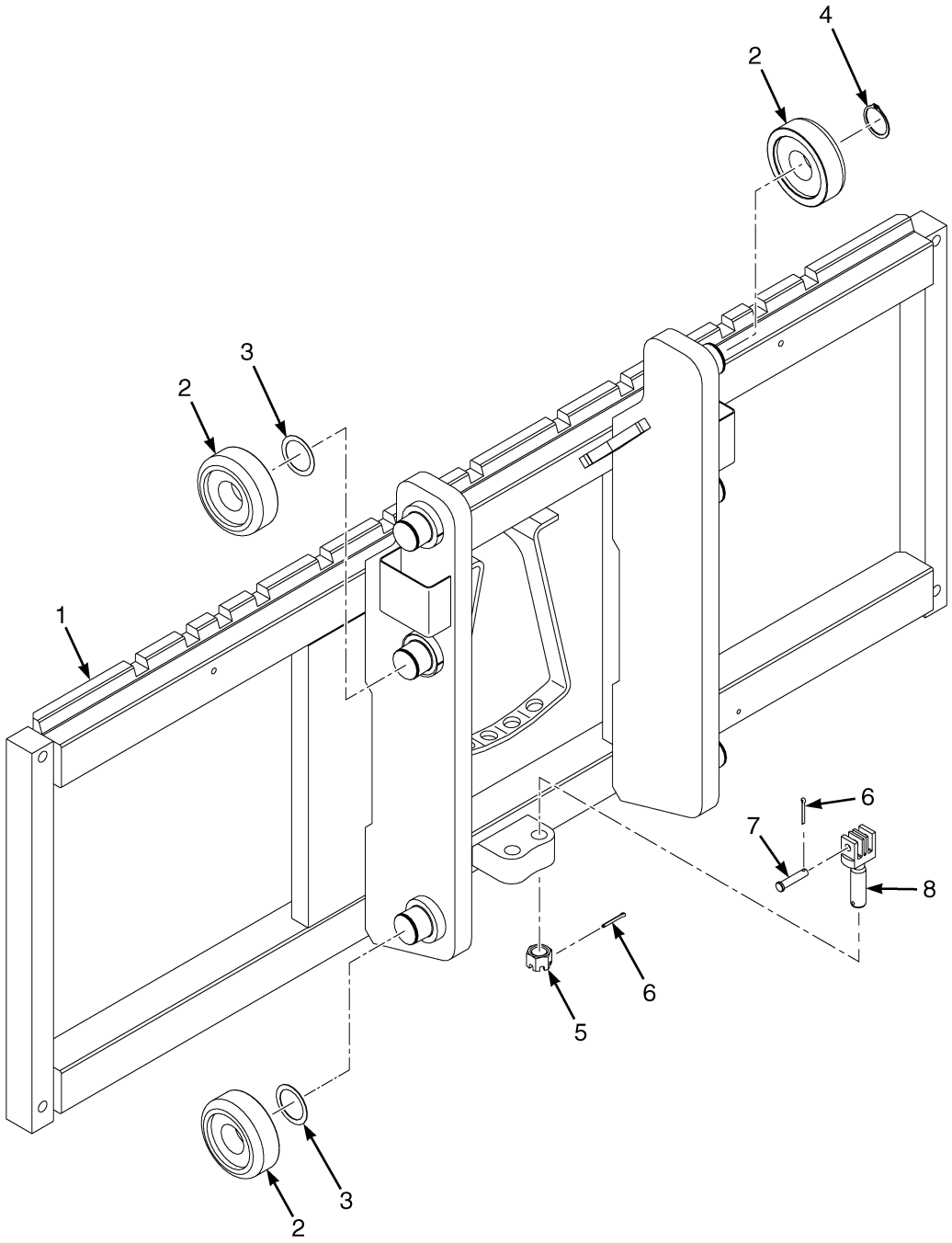

BP171049

©2026 HYSTER COMPANY

CARRIAGE

STANDARD – THREE STAGE FULL FREE-LIFT

KEY:
A: Class II
B: Class III

ITEM	PART NO.	DESCRIPTION	QTY A	QTY B
	4677486	Carriage - Standard, Class II (42")	1	..
	4690726	Carriage - Standard, Class II, Large Tire (42")	1	..
	4689670	Carriage - Standard, Class III (42")	..	1
	4689671	Carriage - Standard, Class III (48")	..	1
	4689672	Carriage - Standard, Class III (54")	..	1
1	4243045	Carriage Wldmt - Standard, Class II (42")	1	..
1	4267431	Carriage Wldmt - Standard, Class II, Large Tire (42")	1	..
1	4243037	Carriage Wldmt - Standard, Class III (42")	..	1
1	4243038	Carriage Wldmt - Standard, Class III (48")	..	1
1	4243039	Carriage Wldmt - Standard, Class III (54")	..	1
1	4258594	Stubshaft	6	6
2	1333399	Load Roller ("B") (3.63 in./3.62 in.)	6	6
2	1395169	Load Roller ("A") (3.61 in./3.60 in.) (Optional)	6	6
2	1337900	Load Roller ("C") (3.67 in./3.66 in.) (Optional)	6	6
3	129387	Shim (0.020 in.)	AR	AR
3	4263698	Shim (0.762 in.) (Optional)	AR	AR
4	58901	Snap Ring	2	2
5	4219867	Nut , Castle	2	2
6	~~2056815~~			
	15224	Cotter Pin	4	4
7	4242899	Pin	2	2
8	4253177	Chain Anchor	2	..
8	4253180	Chain Anchor	..	2

HEADER HOSE AND ATTACHING PARTS (FIGURE 20-13)

THREE STAGE FULL FREE-LIFT

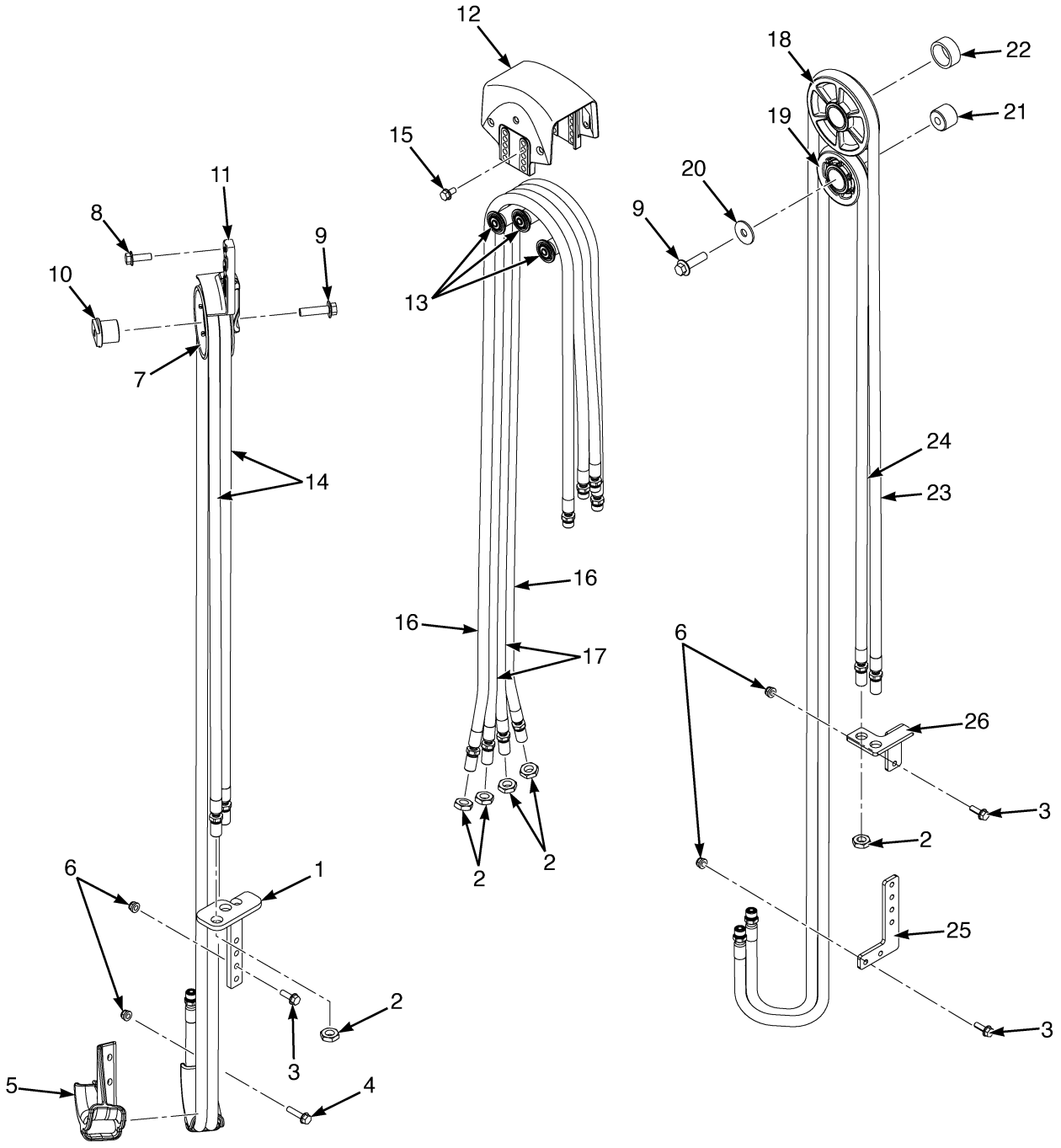

©2026 HYSTER COMPANY

HEADER HOSE AND ATTACHING PARTS

THREE STAGE FULL FREE-LIFT

ITEM	PART NO.	DESCRIPTION	QTY
1	4256970	Bracket	1
2	4187786	Nut	8
3	4185429	Capscrew	6
4	4185431	Capscrew	2
5	4682363	Bracket	1
6	4187690	Locknut	8
7	**b** 4177916	Hose Sheave	1
7	**e** 4360357	Hose Sheave	1
8	4185434	Capscrew	2
9	**a** 4260495	Capscrew (3rd and 4th function)	2
9	**d** 4260495	Capscrew (3rd Function)	1
9	**d** 4187673	Capscrew (4th Function)	1
10	**b** 4013267	Stubshaft	1
10	**e** 4360355	Stubshaft	1
11	4250570	Bracket	1
12	4696052	Crosshead - Hose Guide	1
13	. . . . .	Roller	3
14	4685212	Header Hose (Lift Height 3960-4460/3618-4118mm)	2
14	4685213	Header Hose (Lift Height 4610/4268mm)	2
14	4685214	Header Hose (Lift Height 4760/4418mm)	2
14	4685215	Header Hose (Lift Height 4910/4568mm)	2
14	4685216	Header Hose (Lift Height 5060/4718mm)	2
14	4685217	Header Hose (Lift Height 5210/4868mm)	2
14	4685218	Header Hose (Lift Height 5360/5018mm)	2
14	4685219	Header Hose (Lift Height 5510/5168mm)	2
14	4685220	Header Hose (Lift Height 5660/5318mm)	2
14	4685221	Header Hose (Lift Height 5810/5468mm)	2
14	4685223	Header Hose (Lift Height 6110/5768mm)	2
14	4685225	Header Hose (Lift Height 6410/6068mm)	2
14	4685228	Header Hose (Lift Height 6860/6518mm)	2
14	4685557	Header Hose (Lift Height 7310/6968mm)	2
15	4223693	Capscrew	4
16	4685535	Header Hose (Lift Height 3960-4460/3618-4118mm)	2
16	4685536	Header Hose (Lift Height 4610/4268mm)	2
16	4685537	Header Hose (Lift Height 4760/4418mm)	2
16	4685538	Header Hose (Lift Height 4910/4568mm)	2
16	4685540	Header Hose (Lift Height 5060/4718mm)	2
16	4685541	Header Hose (Lift Height 5210/4868mm)	2
16	4685542	Header Hose (Lift Height 5360/5018mm)	2
16	4685543	Header Hose (Lift Height 5510/5168mm)	2
16	4685545	Header Hose (Lift Height 5660/5318mm)	2
16	4685546	Header Hose (Lift Height 5810/5468mm)	2
16	4685548	Header Hose (Lift Height 6110/5768mm)	2
16	4685551	Header Hose (Lift Height 6410/6068mm)	2
16	4685555	Header Hose (Lift Height 6860/6518mm)	2
16	4685558	Header Hose (Lift Height 7310/6968mm)	2
17	4685534	Header Hose (Lift Height 3960-4460/3618-4118mm)	2
17	4685535	Header Hose (Lift Height 4610/4268mm)	2
17	4685536	Header Hose (Lift Height 4760/4418mm)	2
17	4685537	Header Hose (Lift Height 4910/4568mm)	2

©2026 HYSTER COMPANY

HEADER HOSE AND ATTACHING PARTS

THREE STAGE FULL FREE-LIFT

ITEM	PART NO.	DESCRIPTION	QTY
17	4685539	Header Hose (Lift Height 5060/4718mm)	2
17	4685540	Header Hose (Lift Height 5210/4868mm)	2
17	4685541	Header Hose (Lift Height 5360/5018mm)	2
17	4685542	Header Hose (Lift Height 5510/5168mm)	2
17	4685544	Header Hose (Lift Height 5660/5318mm)	2
17	4685545	Header Hose (Lift Height 5810/5468mm)	2
17	4685547	Header Hose (Lift Height 6110/5768mm)	2
17	4685550	Header Hose (Lift Height 6410/6068mm)	2
17	4685554	Header Hose (Lift Height 6860/6518mm)	2
17	4685231	Header Hose (Lift Height 7310/6968mm)	2
18	**a** 4048784	Hose Sheave	1
18	4050091	Bushing	1
18	**c** 4326458	Hose Sheave	1
18	**e** 4360417	Hose Sheave	1
19	**a** 4048783	Hose Sheave	1
19	4050091	Bushing	1
19	**c** 4326457	Hose Sheave	1
19	**e** 4360416	Hose Sheave	1
20	1345190	Washer	1
21	**a** 4048778	Stubshaft	1
21	**c** 4327882	Stubshaft	1
21	**e** 4360356	Stubshaft	1
22	**a** 4174849	Spacer	1
22	**d** 4335385	Spacer	1
23	4685240	Header Hose (Lift Height 3960-4460/3618-4118mm)	1
23	4685241	Header Hose (Lift Height 4610/4268mm)	1
23	4685242	Header Hose (Lift Height 4760/4418mm)	1
23	4685243	Header Hose (Lift Height 4910/4568mm)	1
23	4685244	Header Hose (Lift Height 5060/4718mm)	1
23	4685245	Header Hose (Lift Height 5210/4868mm)	1
23	4685246	Header Hose (Lift Height 5360/5018mm)	1
23	4685247	Header Hose (Lift Height 5510/5168mm)	1
23	4685248	Header Hose (Lift Height 5660/5318mm)	1
23	4685249	Header Hose (Lift Height 5810/5468mm)	1
23	4685251	Header Hose (Lift Height 6110/5768mm)	1
23	4685253	Header Hose (Lift Height 6410/6068mm)	1
23	4685256	Header Hose (Lift Height 6860/6518mm)	1
23	4685259	Header Hose (Lift Height 7310/6968mm)	1
24	4685268	Header Hose (Lift Height 3960-4460/3618-4118mm)	1
24	4685269	Header Hose (Lift Height 4610/4268mm)	1
24	4685270	Header Hose (Lift Height 4760/4418mm)	1
24	4685271	Header Hose (Lift Height 4910/4568mm)	1
24	4685272	Header Hose (Lift Height 5060/4718mm)	1
24	4685273	Header Hose (Lift Height 5210/4868mm)	1
24	4685274	Header Hose (Lift Height 5360/5018mm)	1
24	4685275	Header Hose (Lift Height 5510/5168mm)	1
24	4685276	Header Hose (Lift Height 5660/5318mm)	1
24	4685277	Header Hose (Lift Height 5810/5468mm)	1
24	4685279	Header Hose (Lift Height 6110/5768mm)	1
24	4685281	Header Hose (Lift Height 6410/6068mm)	1

See Service Manual for service procedures.
©2026 HYSTER COMPANY

HEADER HOSE AND ATTACHING PARTS

THREE STAGE FULL FREE-LIFT

ITEM	PART NO.	DESCRIPTION	QTY
24	4685285	Header Hose (Lift Height 6860/6518mm)	1
24	4685288	Header Hose (Lift Height 7310/6968mm)	1
25	4256971	Bracket	1
26	4256973	Bracket	1

FOOTNOTES:

a → 10/2022
b → 3/2023
c 10/2022 ↔ 3/2023
d 10/2022 →
e 3/2023 →

HEADER HOSE AND ATTACHING PARTS (FIGURE 20-14)

THREE STAGE FULL FREE-LIFT — H50A WITH 28X9 TIRES

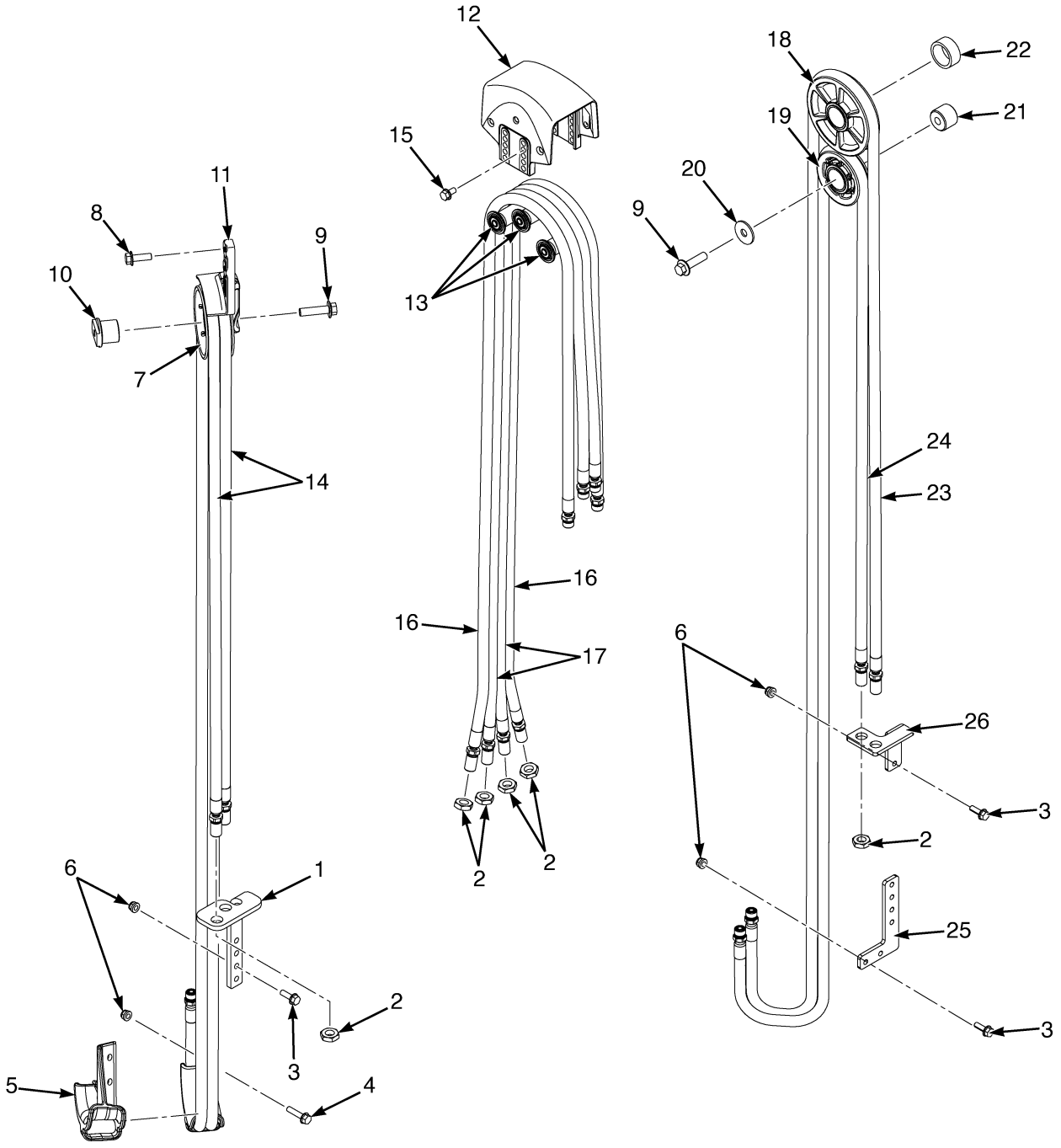

©2026 HYSTER COMPANY

HEADER HOSE AND ATTACHING PARTS

THREE STAGE FULL FREE-LIFT – H50A WITH 28X9 TIRES

ITEM	PART NO.	DESCRIPTION	QTY
1	4256970	Bracket	1
2	4187786	Nut	8
3	4185429	Capscrew	6
4	4185431	Capscrew	2
5	4682363	Bracket	1
6	4187690	Locknut	8
7	**b** 4177916	Hose Sheave	1
7	**e** 4360357	Hose Sheave	1
8	4185434	Capscrew	2
9	**a** 4260495	Capscrew (3rd and 4th Function)	2
9	**d** 4260495	Capscrew (3rd Function)	1
9	**d** 4187673	Capscrew (4th Function)	1
10	**b** 4013267	Stubshaft	1
10	**e** 4360355	Stubshaft	1
11	4250570	Bracket	1
12	4696052	Crosshead - Hose Guide	1
13	. . . . .	Roller	3
14	4685212	Header Hose (Lift Height 3960-4460/3618-4118mm)	2
14	4685213	Header Hose (Lift Height 4610/4268mm)	2
14	4685214	Header Hose (Lift Height 4760/4418mm)	2
14	4685215	Header Hose (Lift Height 4910/4568mm)	2
14	4685216	Header Hose (Lift Height 5060/4718mm)	2
14	4685217	Header Hose (Lift Height 5210/4868mm)	2
14	4685219	Header Hose (Lift Height 5510/5168mm)	2
14	4685220	Header Hose (Lift Height 5660/5318mm)	2
14	4685223	Header Hose (Lift Height 6110/5768mm)	2
14	4685225	Header Hose (Lift Height 6410/6068mm)	2
14	4685228	Header Hose (Lift Height 6860/6518mm)	2
15	4223693	Capscrew	4
16	4668922	Header Hose (Lift Height 3960-4460/3618-4118mm)	2
16	4668923	Header Hose (Lift Height 4610/4268mm)	2
16	4668924	Header Hose (Lift Height 4760/4418mm)	2
16	4668925	Header Hose (Lift Height 4910/4568mm)	2
16	4668927	Header Hose (Lift Height 5060/4718mm)	2
16	4668928	Header Hose (Lift Height 5210/4868mm)	2
16	4668930	Header Hose (Lift Height 5510/5168mm)	2
16	4668932	Header Hose (Lift Height 5660/5318mm)	2
16	4668935	Header Hose (Lift Height 6110/5768mm)	2
16	4668938	Header Hose (Lift Height 6410/6068mm)	2
16	4668942	Header Hose (Lift Height 6860/6518mm)	2
17	4668921	Header Hose (Lift Height 3960-4460/3618-4118mm)	2
17	4668922	Header Hose (Lift Height 4610/4268mm)	2
17	4668923	Header Hose (Lift Height 4760/4418mm)	2
17	4668924	Header Hose (Lift Height 4910/4568mm)	2
17	4668926	Header Hose (Lift Height 5060/4718mm)	2
17	4668927	Header Hose (Lift Height 5210/4868mm)	2
17	4668929	Header Hose (Lift Height 5510/5168mm)	2
17	4668931	Header Hose (Lift Height 5660/5318mm)	2
17	4668934	Header Hose (Lift Height 6110/5768mm)	2
17	4668937	Header Hose (Lift Height 6410/6068mm)	2

©2026 HYSTER COMPANY

HEADER HOSE AND ATTACHING PARTS

THREE STAGE FULL FREE-LIFT – H50A WITH 28X9 TIRES

ITEM	PART NO.	DESCRIPTION	QTY
17	4668941	Header Hose (Lift Height 6860/6518mm)	2
18	**a** 4048784	Hose Sheave	1
18	4050091	Bushing	1
18	**c** 4326458	Hose Sheave	1
18	**e** 4360417	Hose Sheave	1
19	**a** 4048783	Hose Sheave	1
19	4050091	Bushing	1
19	**c** 4326457	Hose Sheave	1
19	**e** 4360416	Hose Sheave	1
20	1345190	Washer	1
21	**a** 4048778	Stubshaft	1
21	**c** 4327882	Stubshaft	1
21	**e** 4360356	Stubshaft	1
22	**a** 4174849	Spacer	1
22	**d** 4335385	Spacer	1
23	4685240	Header Hose (Lift Height 3960-4460/3618-4118mm)	1
23	4685241	Header Hose (Lift Height 4610/4268mm)	1
23	4685242	Header Hose (Lift Height 4760/4418mm)	1
23	4685243	Header Hose (Lift Height 4910/4568mm)	1
23	4685244	Header Hose (Lift Height 5060/4718mm)	1
23	4685245	Header Hose (Lift Height 5210/4868mm)	1
23	4685247	Header Hose (Lift Height 5510/5168mm)	1
23	4685248	Header Hose (Lift Height 5660/5318mm)	1
23	4685251	Header Hose (Lift Height 6110/5768mm)	1
23	4685253	Header Hose (Lift Height 6410/6068mm)	1
23	4685256	Header Hose (Lift Height 6860/6518mm)	1
24	4685268	Header Hose (Lift Height 3960-4460/3618-4118mm)	1
24	4685269	Header Hose (Lift Height 4610/4268mm)	1
24	4685270	Header Hose (Lift Height 4760/4418mm)	1
24	4685271	Header Hose (Lift Height 4910/4568mm)	1
24	4685272	Header Hose (Lift Height 5060/4718mm)	1
24	4685273	Header Hose (Lift Height 5210/4868mm)	1
24	4685275	Header Hose (Lift Height 5510/5168mm)	1
24	4685276	Header Hose (Lift Height 5660/5318mm)	1
24	4685279	Header Hose (Lift Height 6110/5768mm)	1
24	4685281	Header Hose (Lift Height 6410/6068mm)	1
24	4685285	Header Hose (Lift Height 6860/6518mm)	1
25	4256971	Bracket	1
26	4256973	Bracket	1

FOOTNOTES:

a → 10/2022
b → 3/2023
c 10/2022 ↔ 3/2023
d 10/2022 →
e 3/2023 →

©2026 HYSTER COMPANY

FREE LIFT TUBES (FIGURE 20-15)

THREE STAGE FULL FREE-LIFT — LOW

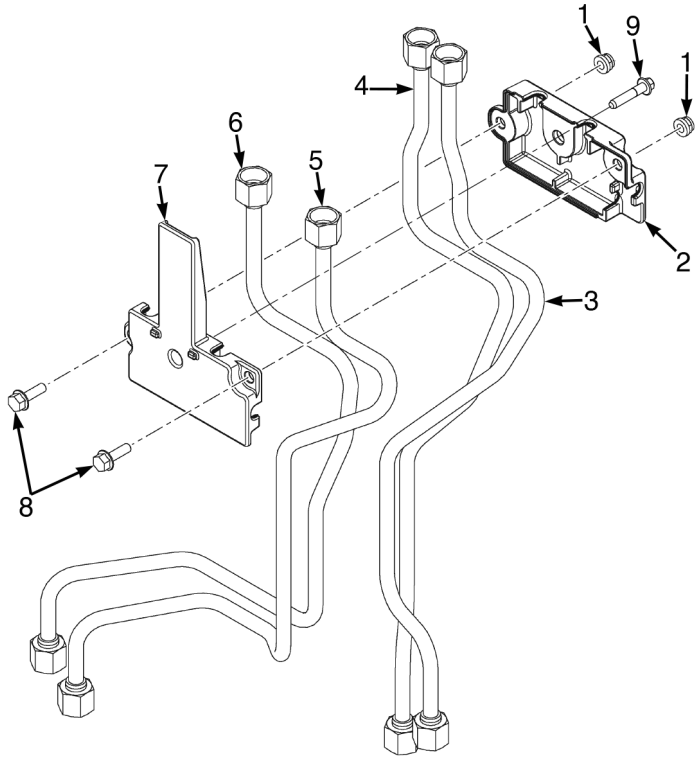

BP171033

ITEM	PART NO.	DESCRIPTION	QTY
	4258849	Tube Assy (3F)	1
	4258850	Tube Assy (4F)	1
1	4187689	Locknut	2
2	4727261	Clamp (Outer)	1
3	4685197	Tube Assy (RH) (3F)	1
4	4685196	Tube Assy (LH) (3F)	1
5	4685199	Tube Assy (RH) (4F)	1
6	4685198	Tube Assy (LH) (4F)	1
7	4727260	Clamp (Inner)	1
8	4188201	Capscrew	2
9	4133281	Capscrew	1

FREE LIFT TUBES (FIGURE 20-16)
THREE STAGE FULL FREE-LIFT — HIGH

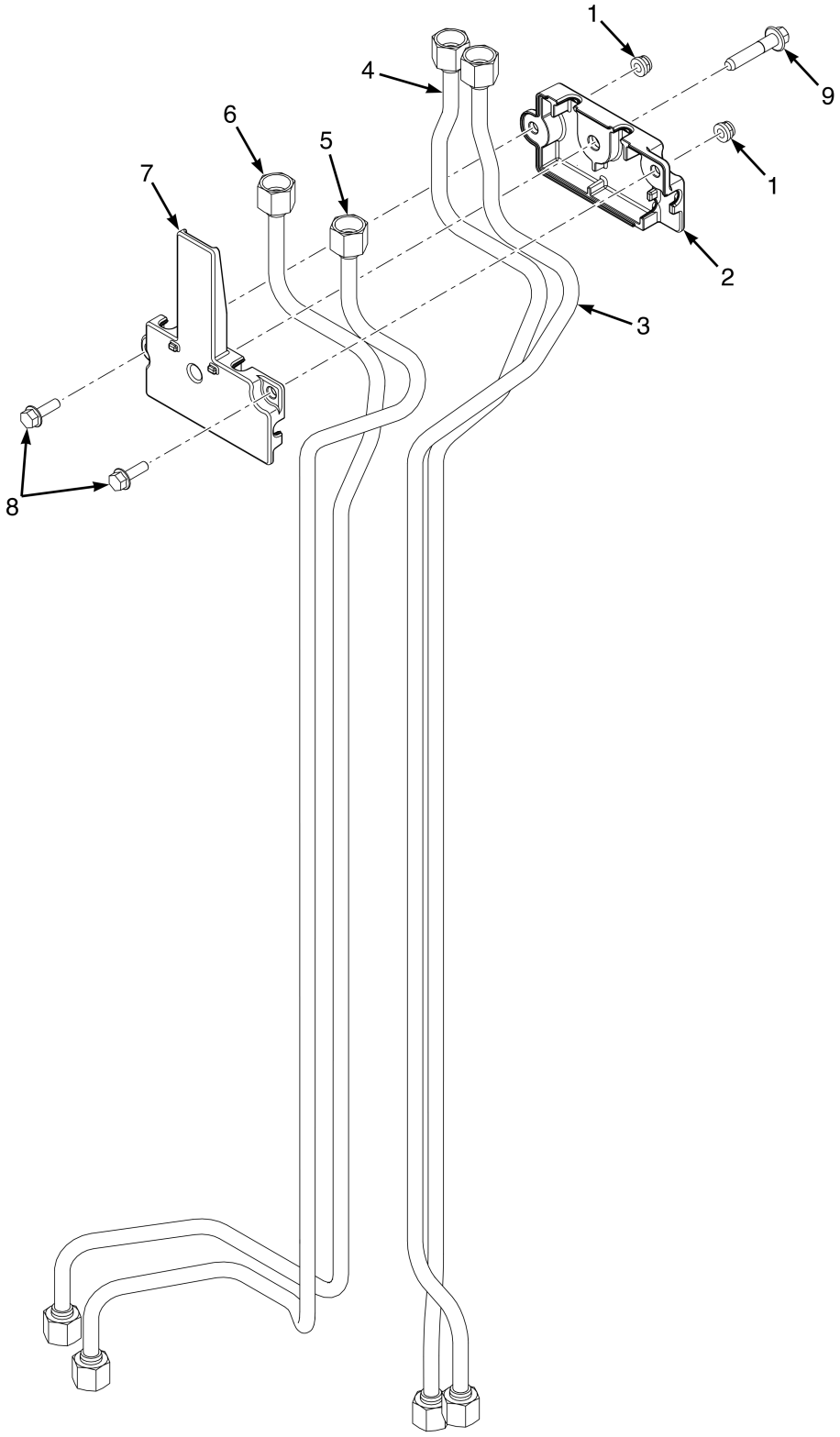

©2026 HYSTER COMPANY

ITEM	PART NO.	DESCRIPTION	QTY
	4258851	Tube Assy (2-3T) (3F)	1
	4258852	Tube Assy (2-3T) (3 and 4 Function)	1
1	4187689	Locknut	2
2	4727261	Clamp (Outer)	1
3	4685564	Tube Assy (RH) (3F)	1
4	4685563	Tube Assy (LH) (3F)	1
5	4685566	Tube Assy (RH) (4F)	1
6	4685565	Tube Assy (LH) (4F)	1
7	4727260	Clamp (Inner)	1
8	4188201	Capscrew	2
9	4133281	Capscrew	1

©2026 HYSTER COMPANY

MAST ELECTRICAL (FIGURE 20-17)

WIRE TAKE-UP (→ 6/2022)

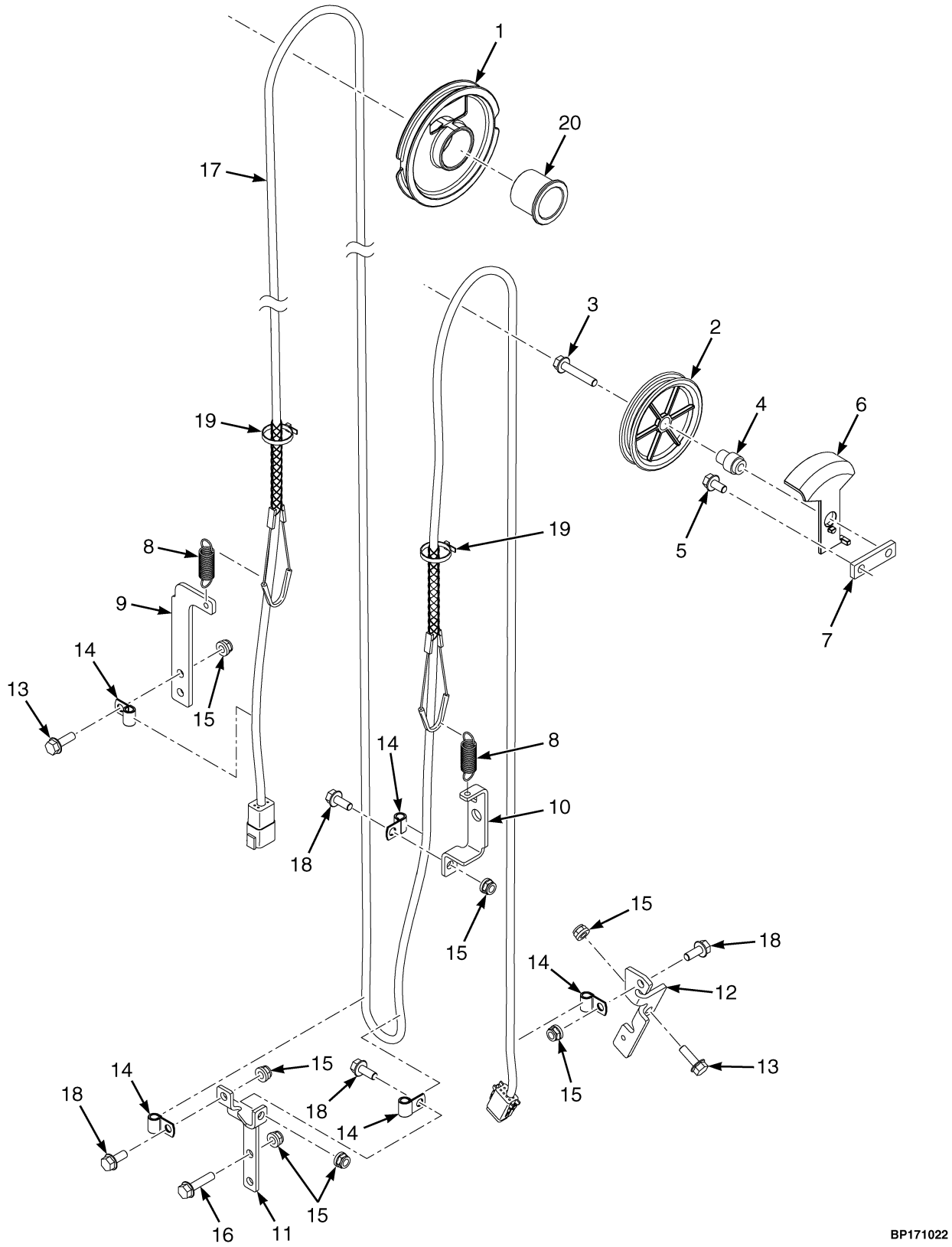

©2026 HYSTER COMPANY

MAST ELECTRICAL

WIRE TAKE-UP (→ 6/2022)

KEY:
A: 2.0-2.5T
B: 3.0-3.5T

ITEM	PART NO.	DESCRIPTION	QTY A	QTY B
1	4314974	Sheave	1	1
2	4148708	Sheave (Reach Mast Wire)	1	1
3	4193301	Capscrew	1	1
4	4269611	Bushing	1	1
5	**a** 4223693	Capscrew	1	1
6	4269612	Cap	1	1
7	**a** 4270626	Bracket	1	1
8	4692425	Spring	2	2
9	**a** 4270375	Bracket - Power to Carriage Termination	1	1
10	4290933	Bracket	1	1
11	4269609	Bracket - Mast Cable Mounting Inner Bottom	1	1
12	4240664	Bracket - 3FFL Power to Carriage Termination	1	1
13	4185429	Capscrew	4	4
14	2304805	Hose Clamp	5	5
15	4187690	Locknut	10	10
16	4185431	Capscrew	2	2
17	4692191	Cable Assy - Power to Carriage (Lift Height 4610mm)	1	..
17	4692191	Cable Assy - Power to Carriage (Lift Height 4268mm)	..	1
17	4692707	Cable Assy - Power to Carriage (Lift Height 4760mm)	1	..
17	4692707	Cable Assy - Power to Carriage (Lift Height 4418mm	..	1
17	4692709	Cable Assy - Power to Carriage (Lift Height 4910mm)	1	..
17	4692709	Cable Assy - Power to Carriage (Lift Height 4568mm)	..	1
17	4692710	Cable Assy - Power to Carriage (Lift Height 5060mm)	1	..
17	4692710	Cable Assy - Power to Carriage (Lift Height 4718mm)	..	1
17	4692711	Cable Assy - Power to Carriage (Lift Height 5210mm)	1	..
17	4692711	Cable Assy - Power to Carriage (Lift Height 4868mm)	..	1
17	4692712	Cable Assy - Power to Carriage (Lift Height 5360mm)	1	..
17	4692712	Cable Assy - Power to Carriage (Lift Height 5018mm)	..	1
17	4692713	Cable Assy - Power to Carriage (Lift Height 5510mm)	1	..
17	4692713	Cable Assy - Power to Carriage (Lift Height 5168mm)	..	1
17	4692715	Cable Assy - Power to Carriage (Lift Height 5660mm)	1	..
17	4692715	Cable Assy - Power to Carriage (Lift Height 5318mm)	..	1
17	4692717	Cable Assy - Power to Carriage (Lift Height 5810mm)	1	..
17	4692717	Cable Assy - Power to Carriage (Lift Height 5468mm)	..	1
17	4692734	Cable Assy - Power to Carriage (Lift Height 5960mm)	1	..
17	4692734	Cable Assy - Power to Carriage (Lift Height 5618mm)	..	1
17	4692735	Cable Assy - Power to Carriage (Lift Height 6110mm)	1	..
17	4692735	Cable Assy - Power to Carriage (Lift Height 5768mm)	..	1
18	4188211	Capscrew	4	4
19	137852	Strap Clamp	2	2
20	4314555	Bushing	1	1

FOOTNOTES:

a Without 3F Header Hose only.

MAST ELECTRICAL (FIGURE 20-18)

WIRE TAKE-UP (6/2022 →)

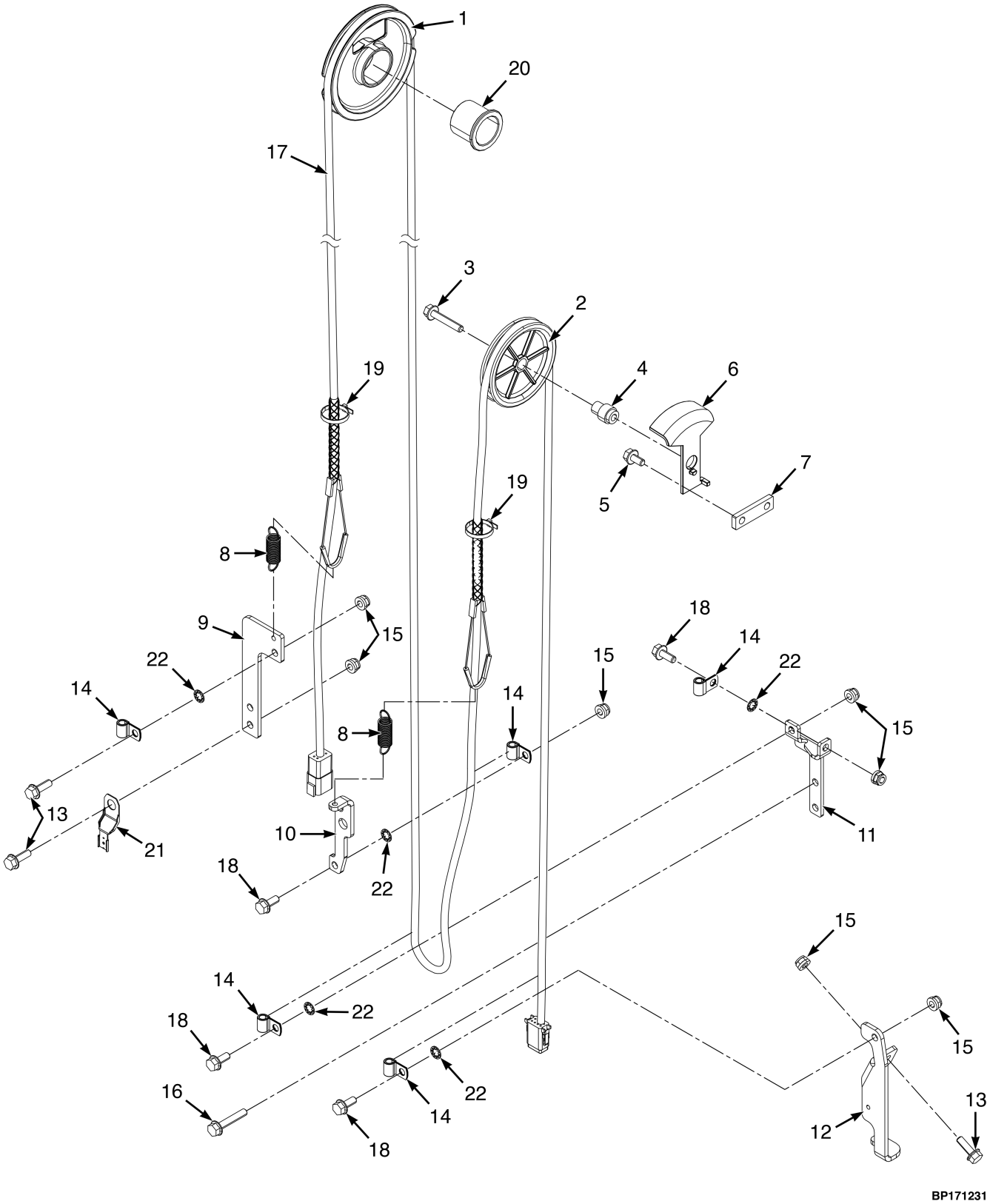

©2026 HYSTER COMPANY

MAST ELECTRICAL

WIRE TAKE-UP (6/2022 →)

KEY:
A: 2.0-2.5T
B: 3.0-3.5T

ITEM	PART NO.	DESCRIPTION	QTY A	QTY B
1	4314974	Sheave	1	1
2	4148708	Sheave (Reach Mast Wire)	1	1
3	4193301	Capscrew	1	1
4	4269611	Bushing	1	1
5	**a** 4223693	Capscrew	1	1
6	4269612	Cap	1	1
7	**a** 4270626	Bracket	1	1
8	4692425	Spring	2	2
9	**a** 4270375	Bracket - Power to Carriage Termination	1	1
10	4347420	Bracket - Mast Cable Mounting Inner Mid	1	1
11	4269609	Bracket - Mast Cable Mounting Inner Bottom	1	1
12	4335147	Bracket - Power to Carriage Termination	1	1
13	4185429	Capscrew	4	4
14	2304805	Hose Clamp	5	5
15	4187690	Locknut	10	10
16	4193301	Capscrew	2	2
17	4692191	Cable Assy - Power to Carriage (Lift Height 4610mm)	1	..
17	4692191	Cable Assy - Power to Carriage (Lift Height 4268mm)	..	1
17	4692707	Cable Assy - Power to Carriage (Lift Height 4760mm)	1	..
17	4692707	Cable Assy - Power to Carriage (Lift Height 4418mm)	..	1
17	4692709	Cable Assy - Power to Carriage (Lift Height 4910mm)	1	..
17	4692709	Cable Assy - Power to Carriage (Lift Height 4568mm)	..	1
17	4692710	Cable Assy - Power to Carriage (Lift Height 5060mm)	1	..
17	4692710	Cable Assy - Power to Carriage (Lift Height 4718mm)	..	1
17	4692711	Cable Assy - Power to Carriage (Lift Height 5210mm)	1	..
17	4692711	Cable Assy - Power to Carriage (Lift Height 4868mm)	..	1
17	4692712	Cable Assy - Power to Carriage (Lift Height 5360mm)	1	..
17	4692712	Cable Assy - Power to Carriage (Lift Height 5018mm)	..	1
17	4692713	Cable Assy - Power to Carriage (Lift Height 5510mm)	1	..
17	4692713	Cable Assy - Power to Carriage (Lift Height 5168mm)	..	1
17	4692715	Cable Assy - Power to Carriage (Lift Height 5660mm)	1	..
17	4692715	Cable Assy - Power to Carriage (Lift Height 5318mm)	..	1
17	4692717	Cable Assy - Power to Carriage (Lift Height 5810mm)	1	..
17	4692717	Cable Assy - Power to Carriage (Lift Height 5468mm)	..	1
17	4692734	Cable Assy - Power to Carriage (Lift Height 5960mm)	1	..
17	4692734	Cable Assy - Power to Carriage (Lift Height 5618mm)	..	1
17	4692735	Cable Assy - Power to Carriage (Lift Height 6110mm)	1	..
17	4692735	Cable Assy - Power to Carriage (Lift Height 5768mm)	..	1
18	4188211	Capscrew	4	4
19	137852	Strap Clamp	2	2
20	4314555	Bushing	1	1
21	1582442	Clip	1	1
22	296360	Washer	4	4

©2026 HYSTER COMPANY

FOOTNOTES:

a Without 3F Header Hose only.

©2026 HYSTER COMPANY

NOTES

MAST ASSEMBLY (FIGURE 20-19)

THREE STAGE FULL FREE-LIFT 2.0-2.5T (A2M3) — PAGE 1 OF 3

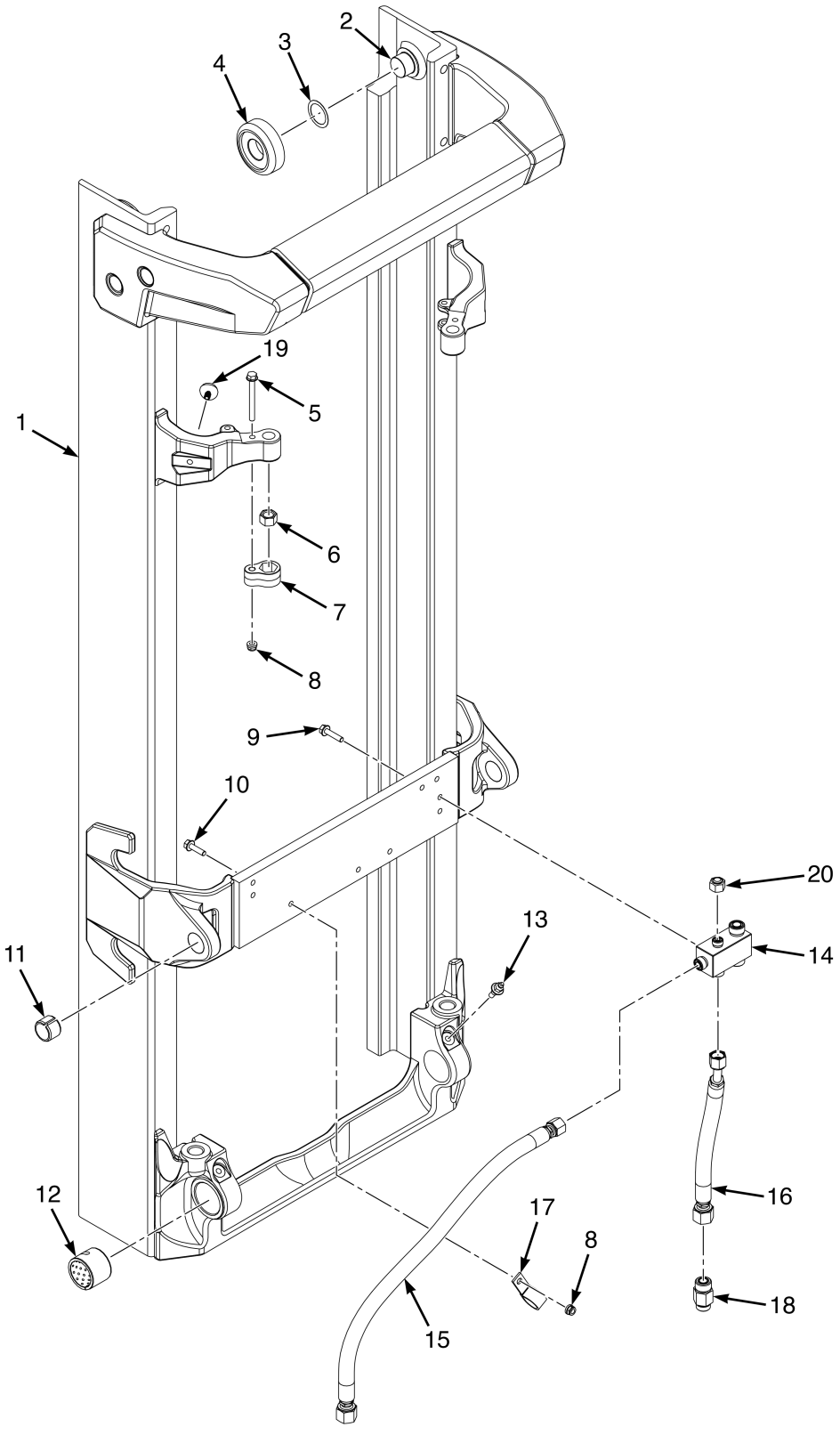

©2026 HYSTER COMPANY

MAST ASSEMBLY

THREE STAGE FULL FREE-LIFT 2.0-2.5T (A2M3) – PAGE 1 OF 3

ITEM	PART NO.	DESCRIPTION	QTY
	4718234	Mast Assy (Lift Height 4060mm/159.8in)	1
	4718237	Mast Assy (Lift Height 4360mm/171.7in)	1
	4718239	Mast Assy (Lift Height 4610mm/181.5in)	1
	4718241	Mast Assy (Lift Height 4910mm/193.3in)	1
	4718243	Mast Assy (Lift Height 5210mm/205.1in)	1
	4719047	Mast Assy (Lift Height 6110mm/240.6in)	1
	4719045	Mast Assy (Lift Height 6410mm/252.4in)	1
1	4224651	Outer Mast (Lift Height 4060mm/159.8in and Lift Height 4360mm/171.7in)	1
1	4224652	Outer Mast (Lift Height 4610mm/181.5in)	1
1	4224654	Outer Mast (Lift Height 4910mm/193.3in)	1
1	4224657	Outer Mast (Lift Height 5210mm/205.1in)	1
1	4224664	Outer Mast (Lift Height 6110mm/240.6in)	1
1	4224667	Outer Mast (Lift Height 6410mm/252.4in)	1
2	4231443	Stubshaft	2
3	129387	Shim (0.020 in.)	AR
3	4263698	Shim (0.762 in.) (Optional)	AR
4	4249502	Load Roller	2
4	4249501	Load Roller (Optional)	2
5	4185433	Capscrew	2
6	4029443	Nut , Castle	2
7	4145952	Restraint	2
8	4187690	Locknut	2
9	4185431	Capscrew	4
10	4185430	Capscrew	1
11	300982	Bushing	2
12	4033414	Bushing	2
13	4269502	Capscrew (Lube)	2
13	16010	Grease Fitting	1
14	4245292	Manifold - Mast Connection Block	1
15	4700253	Hose Assy	1
16	4700254	Hose Assy	1
17	1310611	Clamp	1
18	4700616	Hyd Velocity Fuse	1
19	4275100	Rubber Pad	2
20	1529015	Cap (w/o Accumulator)	1

©2026 HYSTER COMPANY

MAST ASSEMBLY (FIGURE 20-20)

THREE STAGE FULL FREE-LIFT 2.0-2.5T (A2M3) — PAGE 2 OF 3

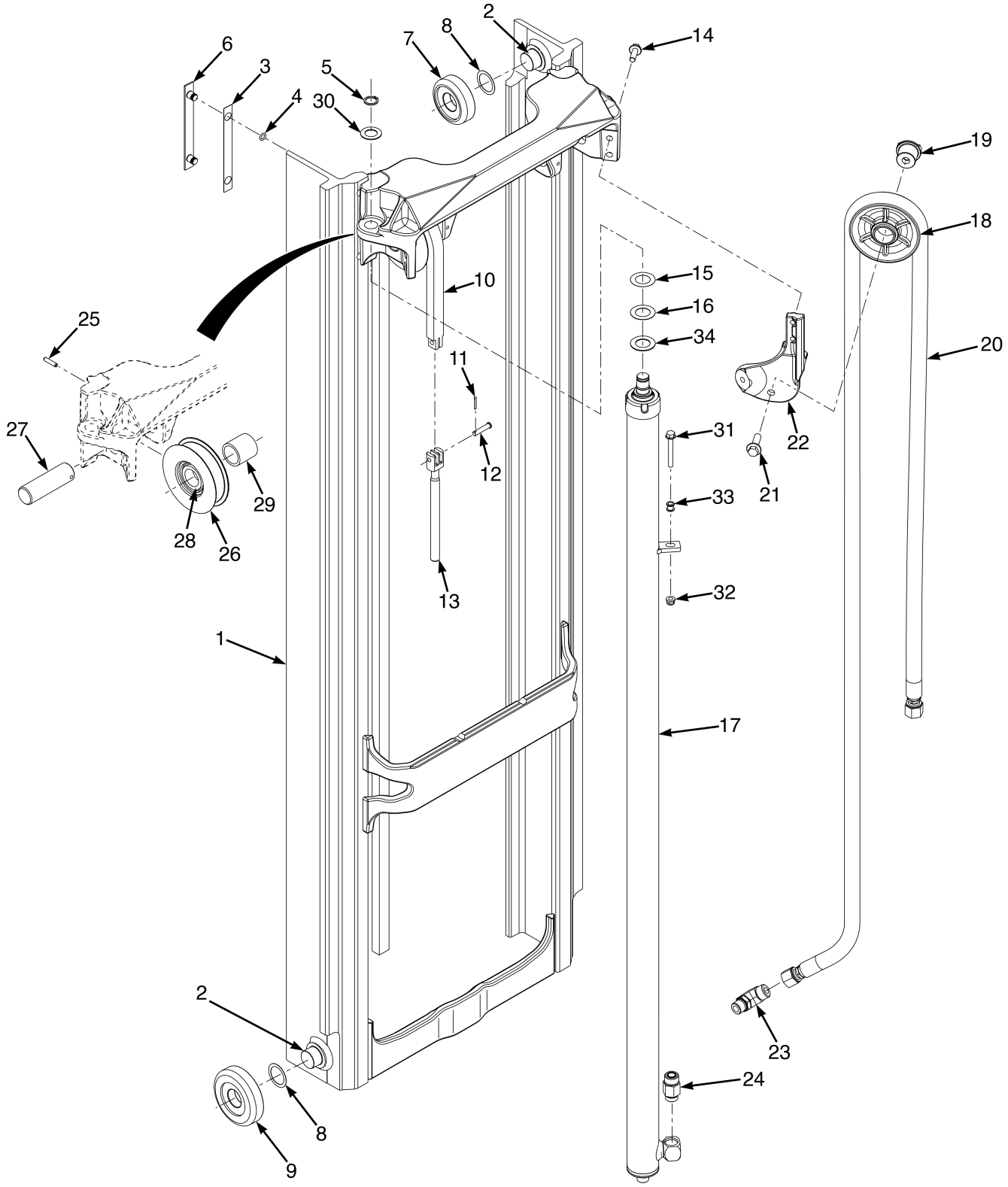

©2026 HYSTER COMPANY

MAST ASSEMBLY

THREE STAGE FULL FREE-LIFT 2.0-2.5T (A2M3) – PAGE 2 OF 3

ITEM	PART NO.	DESCRIPTION	QTY
	4718234	Mast Assy (Lift Height 4060mm/159.8in)	1
	4718237	Mast Assy (Lift Height 4360mm/171.7in)	1
	4718239	Mast Assy (Lift Height 4610mm/181.5in)	1
	4718241	Mast Assy (Lift Height 4910mm/193.3in)	1
	4718243	Mast Assy (Lift Height 5210mm/205.1in)	1
	4719047	Mast Assy (Lift Height 6110mm/240.6in)	1
	4719045	Mast Assy (Lift Height 6410mm/252.4in)	1
1	4224751	Intermediate Mast (Lift Height 4060mm/159.8in and Lift Height 4360mm/171.7in)	1
	4224752	Intermediate Mast (Lift Height 4610mm/181.5in)	1
1	4224754	Intermediate Mast (Lift Height 4910mm/193.3in)	1
1	4224757	Intermediate Mast (Lift Height 5210mm/205.1in)	1
1	4224764	Intermediate Mast (Lift Height 6110mm/240.6in)	1
1	4224767	Intermediate Mast (Lift Height 6410mm/252.4in)	1
2	4231443	Stubshaft	4
3	4253176	Shim	4
3	4253175	Shim (Optional)	4
4	104506	O-Ring	8
5	248212	Snap Ring	2
6	4253173	Wear Strip	4
7	4249502	Load Roller	2
7	4249501	Load Roller (Optional)	2
8	129387	Shim (0.020 in.)	AR
8	4263698	Shim (0.762 in.) (Optional)	AR
9	4249506	Load Roller	2
9	4249505	Load Roller (Optional)	2
10	4337028	Leaf Chain - Fixed Length (Lift Height 4060mm/159.8in and Lift Height 4360mm/171.7in)	2
10	4337030	Leaf Chain - Fixed Length (Lift Height 4610mm/181.5in)	2
10	4337032	Leaf Chain - Fixed Length (Lift Height 4910mm/193.3in)	2
10	4337036	Leaf Chain - Fixed Length (Lift Height 5210mm/205.1in)	2
10	4337045	Leaf Chain - Fixed Length (Lift Height 6110mm/240.6in)	2
10	4337040	Leaf Chain - Fixed Length (Lift Height 6410mm/252.4in)	2
11	15222	Cotter Pin	2
12	4242899	Pin	4
13	4335944	Chain Anchor	2
14	4185434	Capscrew	2
15	4242898	Shim	2
16	4242897	Shim	2
17	. . . . .	Main Lift Cylinder (☞Figure 20-22)	2
18	4048782	Hose Sheave	1
18	4325658	Hose Sheave (Free Lift Supply)	1
19	4013267	Stubshaft	1
19	4360355	Stubshaft	1
20	4675701	Hose Assy (Lift Height 4060mm/159.8in and Lift Height 4360mm/171.7in)	1
20	4675707	Hose Assy (Lift Height 4610mm/181.5in)	1
20	4675709	Hose Assy (Lift Height 4910mm/193.3in)	1
20	4675712	Hose Assy (Lift Height 5210mm/205.1in)	1
20	4675719	Hose Assy (Lift Height 6110mm/240.6in)	1
20	4675722	Hose Assy (Lift Height 6410mm/252.4in)	1

©2026 HYSTER COMPANY

MAST ASSEMBLY

THREE STAGE FULL FREE-LIFT 2.0-2.5T (A2M3) – PAGE 2 OF 3

ITEM	PART NO.	DESCRIPTION	QTY
21	4187673	Capscrew	1
22	4252149	Bracket	1
23	4106301	Fitting	1
24	4700616	Hyd Velocity Fuse	1
25	302465	Roll Pin	2
26	4286492	Chain Sheave	2
27	4360354	Pin	2
28	4356095	Spacer	2
29	4244114	Spacer	2
30	2306942	Shim	2
31	4189066	Capscrew	2
32	4187690	Locknut	2
33	~~4309896~~		
	4369706	Spacer	2
34	1333382	Washer (Mast Shim) (0.060 in.)	AR

See Service Manual for service procedures.
©2026 HYSTER COMPANY

NOTES

MAST ASSEMBLY (FIGURE 20-21)

THREE STAGE FULL FREE-LIFT 2.0-2.5T (A2M3) — PAGE 3 OF 3

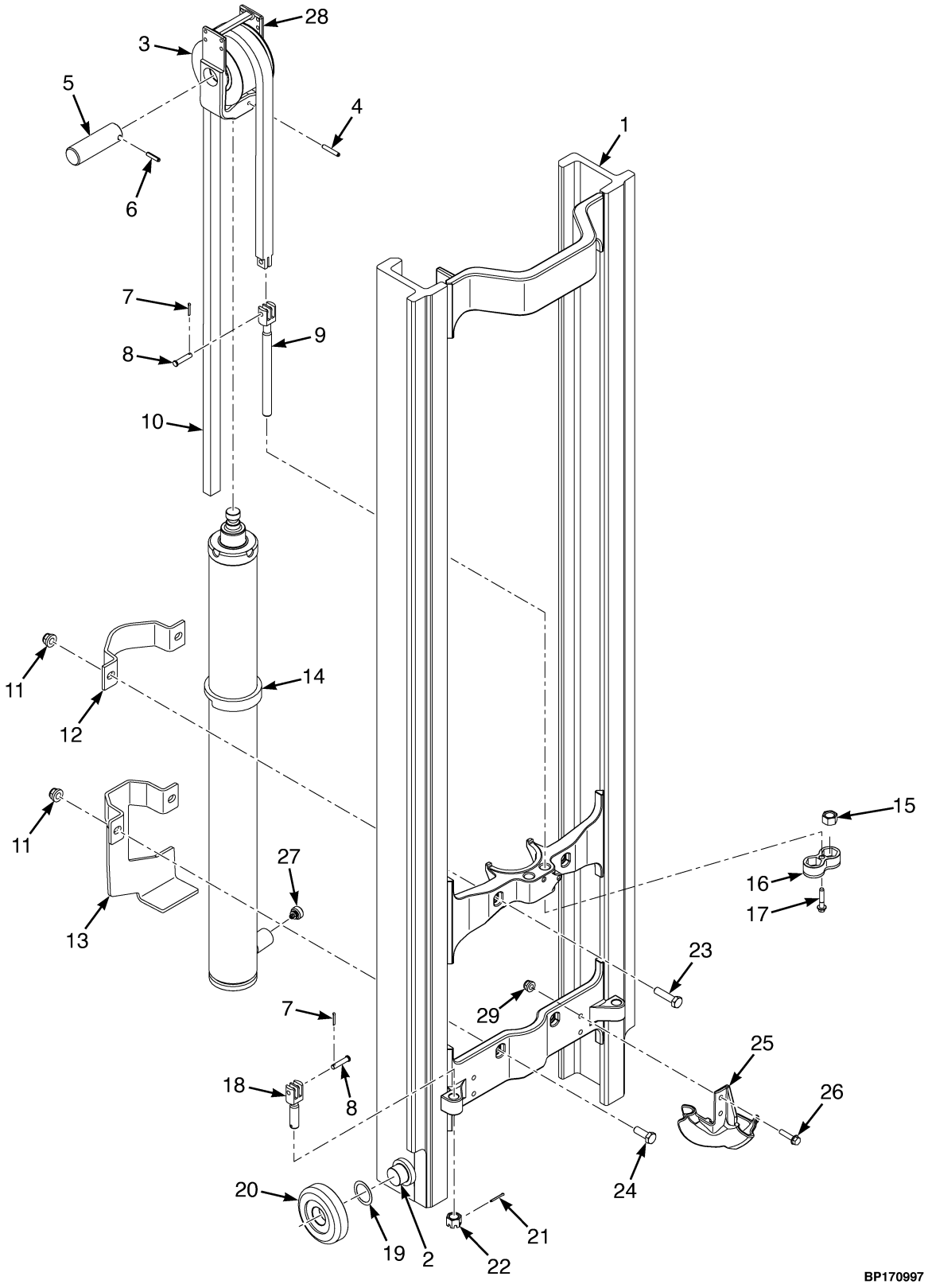

©2026 HYSTER COMPANY

MAST ASSEMBLY

THREE STAGE FULL FREE-LIFT 2.0-2.5T (A2M3) – PAGE 3 OF 3

ITEM	PART NO.	DESCRIPTION	QTY
	4718234	Mast Assy (Lift Height 4060mm/159.8in)	1
	4718237	Mast Assy (Lift Height 4360mm/171.7in)	1
	4718239	Mast Assy (Lift Height 4610mm/181.5in)	1
	4718241	Mast Assy (Lift Height 4910mm/193.3in)	1
	4718243	Mast Assy (Lift Height 5210mm/205.1in)	1
	4719047	Mast Assy (Lift Height 6110mm/240.6in)	1
	4719045	Mast Assy (Lift Height 6410mm/252.4in)	1
1	4224851	Inner Mast (Lift Height 4060mm/159.8in and Lift Height 4360mm/171.7in)	1
1	4224852	Inner Mast (Lift Height 4610mm/181.5in)	1
1	4224854	Inner Mast (Lift Height 4910mm/193.3in)	1
1	4224857	Inner Mast (Lift Height 5210mm/205.1in)	1
1	4224864	Inner Mast (Lift Height 6110mm/240.6in)	1
1	4224867	Inner Mast (Lift Height 6410mm/252.4in)	1
2	4231443	Stubshaft	2
3	4223287	Chain Sheave	1
4	302468	Roll Pin	1
5	4341825	Pin	1
6	302465	Roll Pin	1
7	15222	Cotter Pin	4
8	4242899	Pin	4
9	4335944	Chain Anchor	2
10	4337017	Leaf Chain - Fixed Length (Lift Height 4060mm/159.8in and Lift Height 4360mm/171.7in)	2
10	4337019	Leaf Chain - Fixed Length (Lift Height 4610mm/181.5in)	2
10	4337021	Leaf Chain - Fixed Length (Lift Height 4910mm/193.3in)	2
10	4337025	Leaf Chain - Fixed Length (Lift Height 5210mm/205.1in and Lift Height 6410mm/252.4in)	2
10	4337034	Leaf Chain - Fixed Length (Lift Height 6110mm/240.6in)	2
11	4187692	Locknut	4
12	4057611	Clamp	1
13	4231398	Clamp	1
14	. . . . .	Free Lift Cylinder (☞Figure 20-23)	1
15	4029443	Nut , Castle	2
16	4175491	Restraint - Chain Anchor nut, double	1
17	4133281	Capscrew	1
18	4335943	Chain Anchor	2
19	129387	Shim (0.020 in.)	AR
19	4263698	Shim (0.762 in.) (Optional)	AR
20	4249506	Load Roller	2
20	4249505	Load Roller (Optional)	2
21	~~2056815~~		
	15224	Cotter Pin	2
22	4219867	Nut , Castle	2
23	1581827	Capscrew	2
24	1596404	Capscrew	2
25	~~4682364~~		
	4730772	Bracket (FL Supply Support)	1
26	4185431	Capscrew	2
27	4055506	Flow Valve	1
28	4249630	Crosshead	1

MAST ASSEMBLY

THREE STAGE FULL FREE-LIFT 2.0-2.5T (A2M3) – PAGE 3 OF 3

ITEM	PART NO.	DESCRIPTION	QTY
29	4187690	Locknut	2

©2026 HYSTER COMPANY

MAIN LIFT CYLINDER (FIGURE 20-22)

THREE STAGE FULL FREE-LIFT — 2.0-2.5T (A2M3)

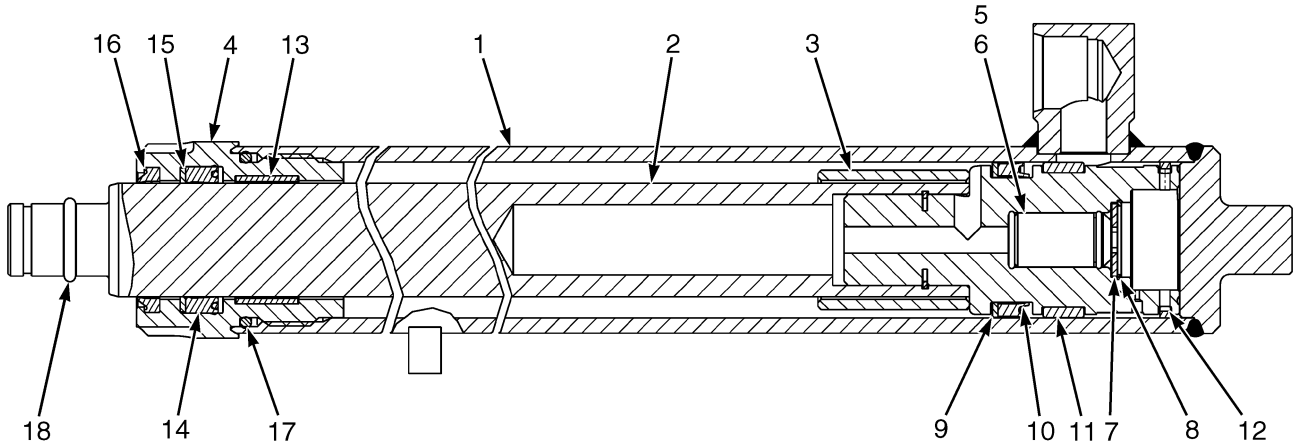

BP170987

ITEM	PART NO.	DESCRIPTION	QTY
	4680798	Lift Cylinder (Lift Height 4060mm/159.8in)	1
	4680801	Lift Cylinder (Lift Height 4360mm/171.7in)	1
	4680803	Lift Cylinder (Lift Height 4610mm/181.5in)	1
	4680805	Lift Cylinder (Lift Height 4910mm/193.3in)	1
	4680839	Lift Cylinder (Lift Height 5210mm/205.1in)	1
	4680852	Lift Cylinder (Lift Height 6110mm/240.6in)	1
	4680858	Lift Cylinder (Lift Height 6410mm/252.4in)	1
1	4250692	Tube Wldmt-Cylinder (Lift Height 4060mm/159.8in an Lift Height 4360mm/171.7in)	1
1	4250693	Tube Wldmt-Cylinder (Lift Height 4610mm/181.5in)	1
1	4250695	Tube Wldmt-Cylinder (Lift Height 4910mm/193.3in)	1
1	4250698	Tube Wldmt-Cylinder (Lift Height 5210mm/205.1in)	1
1	4250703	Tube Wldmt-Cylinder (Lift Height 6110mm/240.6in)	1
1	4250706	Tube Wldmt-Cylinder (Lift Height 6410mm/252.4in)	1
2	4246572	Rod Assy (Lift Height 4060mm/159.8in an Lift Height 4360mm/171.7in)	1
2	4246573	Rod Assy (Lift Height 4610mm/181.5in)	1
2	4246575	Rod Assy (Lift Height 4910mm/193.3in)	1
2	4246578	Rod Assy (Lift Height 5210mm/205.1in)	1
2	4246583	Rod Assy (Lift Height 6110mm/240.6in)	1
2	4246586	Rod Assy (Lift Height 6410mm/252.4in)	1
3	1356037	Spacer (Lift Height 4060mm/159.8in)	1
3	4133025	Spacer (Lift Height 4360mm/171.7in)	1
3	1355610	Spacer (Lift Height 5210mm/205.1in)	1
3	1355626	Spacer (Lift Height 6110mm/240.6in)	1
3	1355643	Spacer (Lift Height 6410mm/252.4in)	1
4	4615847	Gland	1

ITEM	PART NO.	DESCRIPTION	QTY
5	257913	Check Valve	1
6	190580	O-Ring	1
7	297531	Washer	1
7	637635	Washer (Optional)	1
8	187388	Snap Ring	1
9	638246	Back-Up Ring	1
10	1381064	Piston Seal	1
11	1356750	Wear Ring	1
12	1360127	Piston Ring	1
13	322902	Wear Ring	1
14	1356749	Rod Seal	1
15	322824	Back-Up Ring	1
16	1383063	Rod Wiper	1
17	~~4028986~~		
	92861	O-Ring	1
18	60836	O-Ring	1
	4623973	Kit-Seal	1

©2026 HYSTER COMPANY

FREE-LIFT CYLINDER (FIGURE 20-23)

THREE STAGE FULL FREE-LIFT — 2.0-2.5T (A2M3)

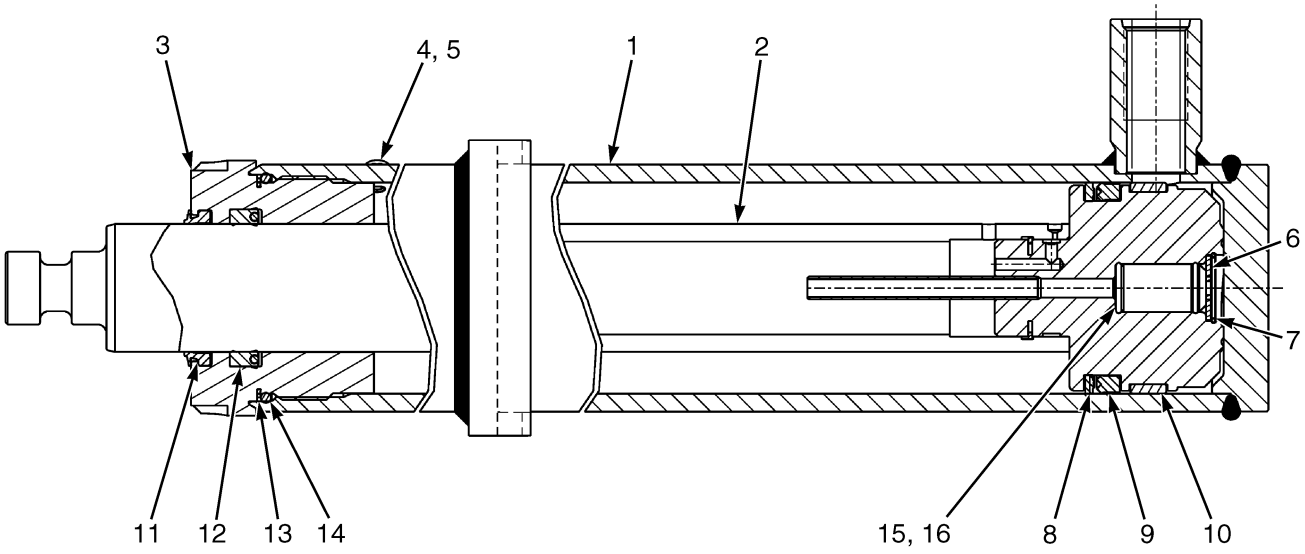

BP170992

ITEM	PART NO.	DESCRIPTION	QTY
	4680810	Cylinder Assy (Lift Height 4060mm/159.8in and Lift Height 4360mm/171.7in) ..	1
	4680811	Cylinder Assy (Lift Height 4610mm/181.5in)	1
	4680813	Cylinder Assy (Lift Height 4910mm/193.3in)	1
	4680817	Cylinder Assy (Lift Height 5210mm/205.1in)	1
	4680827	Cylinder Assy (Lift Height 6110mm/240.6in)	1
	4680835	Cylinder Assy (Lift Height 6410mm/252.4in)	1
1	4251401	Tube Wldmt-Cylinder (Lift Height 4060mm/159.8in and Lift Height 4360mm/171.7in)	1
1	4251402	Tube Wldmt-Cylinder (Lift Height 4610mm/181.5in)	1
1	4251404	Tube Wldmt-Cylinder (Lift Height 4910mm/193.3in)	1
1	4251407	Tube Wldmt-Cylinder (Lift Height 5210mm/205.1in)	1
1	4251413	Tube Wldmt-Cylinder (Lift Height 6110mm/240.6in)	1
1	4251416	Tube Wldmt-Cylinder (Lift Height 6410mm/252.4in)	1
2	4179933	Cylinder Rod (Lift Height 4060mm/159.8in and Lift Height 4360mm/171.7in)	1
2	4179934	Cylinder Rod (Lift Height 4610mm/181.5in)	1
2	4179936	Cylinder Rod (Lift Height 4910mm/193.3in)	1
2	4179938	Cylinder Rod (Lift Height 5210mm/205.1in)	1
2	4179944	Cylinder Rod (Lift Height 6110mm/240.6in)	1
2	4179946	Cylinder Rod (Lift Height 6410mm/252.4in)	1
3	~~4601465~~		
	4719149	Gland	1
4	190887	Sealing Ring	1
5	1361302	Screw	1
5	4363244	Capscrew (Optional)	1
6	297531	Washer	1
6	637635	Washer (Optional)	1
7	187388	Snap Ring	1
8	2013089	Back-Up Ring	1

ITEM	PART NO.	DESCRIPTION	QTY
9	2013088	Rod Seal	1
10	1358972	Wear Ring	1
11	1463108	Rod Wiper	1
12	1622946	Rod Seal	1
13	147973	Back-Up Ring	1
14	90263	O-Ring	1
15	257913	Check Valve	1
16	190580	O-Ring	1
	4681457	Kit-Seal	1

©2026 HYSTER COMPANY

NOTES

MAST ASSEMBLY (FIGURE 20-24)

THREE STAGE FULL FREE-LIFT 3.0-3.5T (A2M4) — PAGE 1 OF 3

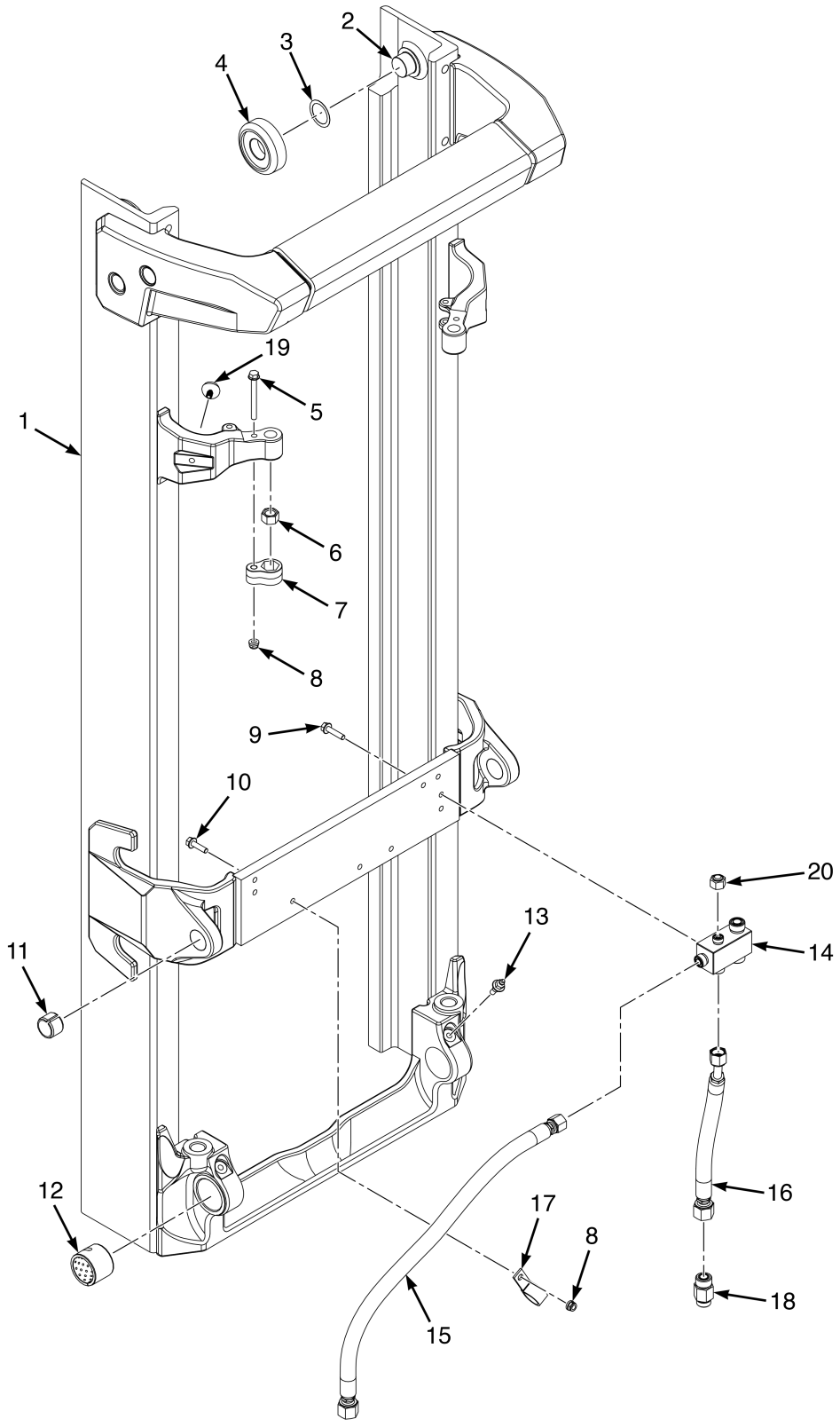

©2026 HYSTER COMPANY

MAST ASSEMBLY

THREE STAGE FULL FREE-LIFT 3.0-3.5T (A2M4) – PAGE 1 OF 3

ITEM	PART NO.	DESCRIPTION	QTY
	4718258	Mast Assy (Lift Height 3968mm/156.2in)	1
	4718260	Mast Assy (Lift Height 4268mm/168in)	1
	4718262	Mast Assy (Lift Height 4568mm/179.8in)	1
	4718264	Mast Assy (Lift Height 4868mm/191.7in)	1
	4718268	Mast Assy (Lift Height 5468mm/215.3in)	1
	4718272	Mast Assy (Lift Height 6068mm/238.9in)	1
	4718275	Mast Assy (Lift Height 6518mm/256.6in)	1
1	4224651	Outer Mast (Lift Height 3968mm/156.2in)	1
1	4224652	Outer Mast (Lift Height 4268mm/168in)	1
1	4224654	Outer Mast (Lift Height 4568mm/179.8in)	1
1	4224657	Outer Mast (Lift Height 4868mm/191.7in)	1
1	4224662	Outer Mast (Lift Height 5468mm/215.3in)	1
1	4224667	Outer Mast (Lift Height 6068mm/238.9in)	1
1	4224671	Outer Mast (Lift Height 6518mm/256.6in)	1
2	4231443	Stubshaft	2
3	129387	Shim (0.020 in.)	AR
4	4249502	Load Roller	2
4	4249501	Load Roller (Optional)	2
5	4185433	Capscrew	2
6	4029443	Nut , Castle	2
7	4145952	Restraint	2
8	4187690	Locknut	2
9	4185431	Capscrew	4
10	4185430	Capscrew	1
11	300982	Bushing	2
12	4033414	Bushing	2
13	4269502	Capscrew (Lube)	2
13	16010	Grease Fitting	1
14	4245292	Manifold - Mast Connection Block	1
15	4700253	Hose Assy	1
16	4700254	Hose Assy	1
17	1310611	Clamp	1
18	4700616	Hyd Velocity Fuse	1
19	4176370	Rubber Pad	2
20	1529015	Cap (w/o Accumulator)	1

©2026 HYSTER COMPANY

MAST ASSEMBLY (FIGURE 20-25)

THREE STAGE FULL FREE-LIFT 3.0-3.5T (A2M4) — PAGE 2 OF 3

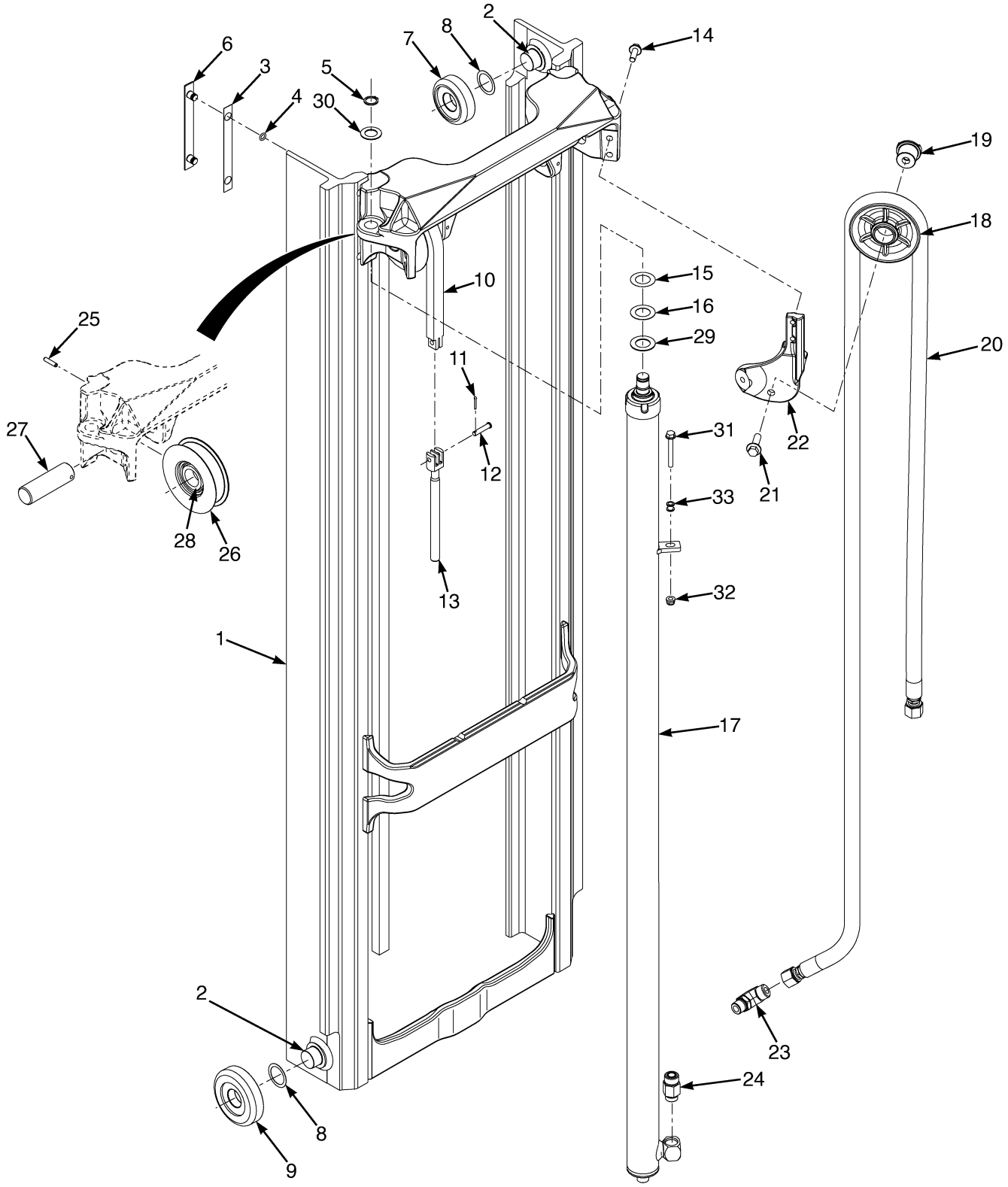

©2026 HYSTER COMPANY

MAST ASSEMBLY

THREE STAGE FULL FREE-LIFT 3.0-3.5T (A2M4) – PAGE 2 OF 3

ITEM	PART NO.	DESCRIPTION	QTY
	4718258	Mast Assy (Lift Height 3968mm/156.2in)	1
	4718260	Mast Assy (Lift Height 4268mm/168in)	1
	4718262	Mast Assy (Lift Height 4568mm/179.8in)	1
	4718264	Mast Assy (Lift Height 4868mm/191.7in)	1
	4718268	Mast Assy (Lift Height 5468mm/215.3in)	1
	4718272	Mast Assy (Lift Height 6068mm/238.9in)	1
	4718275	Mast Assy (Lift Height 6518mm/256.6in)	1
1	4224751	Intermediate Mast (Lift Height 3968mm/156.2in)	1
1	4224752	Intermediate Mast (Lift Height 4268mm/168in)	1
1	4224754	Intermediate Mast (Lift Height 4568mm/179.8in)	1
1	4224757	Intermediate Mast (Lift Height 4868mm/191.7in)	1
1	4224762	Intermediate Mast (Lift Height 5468mm/215.3in)	1
1	4224767	Intermediate Mast (Lift Height 6068mm/238.9in)	1
1	4224771	Intermediate Mast (Lift Height 6518mm/256.6in)	1
2	4231443	Stubshaft	4
3	4253176	Shim	4
3	4253175	Shim (Optional)	4
4	104506	O-Ring	8
5	248212	Snap Ring	2
6	4253173	Wear Strip	4
7	4249502	Load Roller	2
7	4249501	Load Roller (Optional)	2
8	129387	Shim (0.020 in.)	AR
9	4249506	Load Roller	2
9	4249505	Load Roller (Optional)	2
10	4337128	Leaf Chain - Fixed Length (Lift Height 3968mm/156.2in)	2
10	4337130	Leaf Chain - Fixed Length (Lift Height 4268mm/168in)	2
10	4337132	Leaf Chain - Fixed Length (Lift Height 4568mm/179.8in)	2
10	4337137	Leaf Chain - Fixed Length (Lift Height 4868mm/191.7in)	2
10	4337143	Leaf Chain - Fixed Length (Lift Height 5468mm/215.3in)	2
10	4337149	Leaf Chain - Fixed Length (Lift Height 6068mm/238.9in)	2
10	4337155	Leaf Chain - Fixed Length (Lift Height 6518mm/256.6in)	2
11	15222	Cotter Pin	2
12	4242899	Pin	4
13	~~4329736~~		
	4397079	Chain Anchor	2
14	4185434	Capscrew	2
15	4242898	Shim	2
16	4242897	Shim	2
17	. . . . .	Main Lift Cylinder (☞Figure 20-27)	2
18	4048782	Hose Sheave	1
18	4325658	Hose Sheave (Free Lift Supply)	1
19	4013267	Stubshaft	1
19	4360355	Stubshaft	1
20	4675766	Hose Assy (Lift Height 3968mm/156.2in)	1
20	4675771	Hose Assy (Lift Height 4268mm/168in)	1
20	4675773	Hose Assy (Lift Height 4568mm/179.8in)	1
20	4675776	Hose Assy (Lift Height 4868mm/191.7in)	1
20	4675781	Hose Assy (Lift Height 5468mm/215.3in)	1
20	4675786	Hose Assy (Lift Height 6068mm/238.9in)	1

©2026 HYSTER COMPANY

MAST ASSEMBLY

THREE STAGE FULL FREE-LIFT 3.0-3.5T (A2M4) – PAGE 2 OF 3

ITEM	PART NO.	DESCRIPTION	QTY
20	4675790	Hose Assy (Lift Height 6518mm/256.6in)	1
21	4187673	Capscrew	1
22	4252149	Bracket	1
23	4106301	Fitting	1
24	4700616	Hyd Velocity Fuse	1
25	302465	Roll Pin	2
26	4223286	Chain Sheave	2
27	4172274	Pin - Hose Sheave	2
27	4360354	Pin	2
28	1378691	Spacer	2
29	1333382	Washer (Mast Shim) (0.060 in.)	AR
30	2306942	Shim	2
31	4189066	Capscrew	2
32	4187690	Locknut	2
33	~~4309896~~		
	4369706	Spacer	2

See Service Manual for service procedures.
©2026 HYSTER COMPANY

NOTES

MAST ASSEMBLY (FIGURE 20-26)

THREE STAGE FULL FREE-LIFT 3.0-3.5T (A2M4) — PAGE 3 OF 3

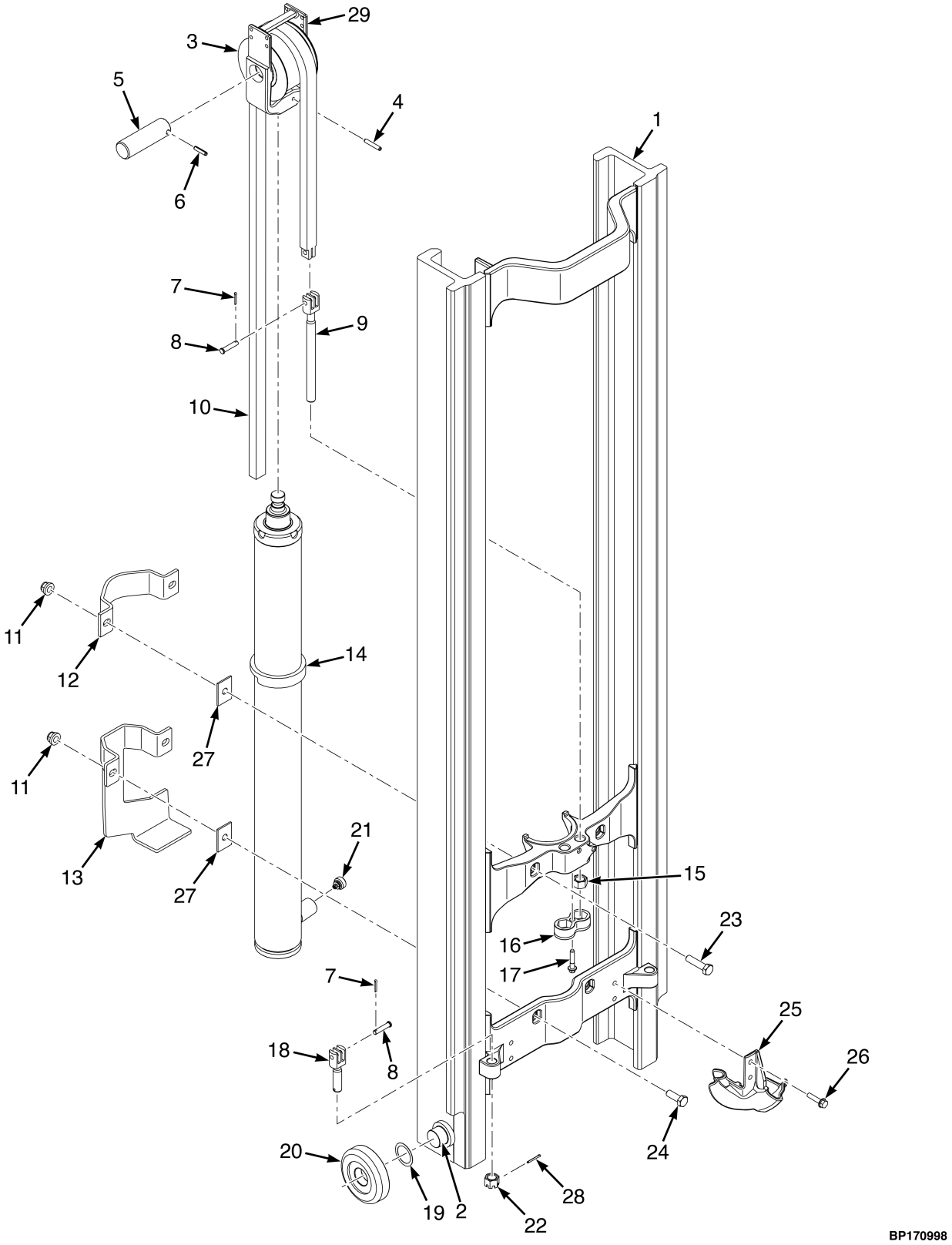

©2026 HYSTER COMPANY

MAST ASSEMBLY

THREE STAGE FULL FREE-LIFT 3.0-3.5T (A2M4) – PAGE 3 OF 3

ITEM	PART NO.	DESCRIPTION	QTY
	4718258	Mast Assy (Lift Height 3968mm/156.2in)	1
	4718260	Mast Assy (Lift Height 4268mm/168in)	1
	4718262	Mast Assy (Lift Height 4568mm/179.8in)	1
	4718264	Mast Assy (Lift Height 4868mm/191.7in)	1
	4718268	Mast Assy (Lift Height 5468mm/215.3in)	1
	4718272	Mast Assy (Lift Height 6068mm/238.9in)	1
	4718275	Mast Assy (Lift Height 6518mm/256.6in)	1
1	4224851	Inner Mast (Lift Height 3968mm/156.2in)	1
1	4224852	Inner Mast (Lift Height 4268mm/168in)	1
1	4224854	Inner Mast (Lift Height 4568mm/179.8in)	1
1	4224857	Inner Mast (Lift Height 4868mm/191.7in)	1
1	4224862	Inner Mast (Lift Height 5468mm/215.3in)	1
1	4224867	Inner Mast (Lift Height 6068mm/238.9in)	1
1	4224871	Inner Mast (Lift Height 6518mm/256.6in)	1
2	4231443	Stubshaft	2
3	4223287	Chain Sheave	1
4	302468	Roll Pin	1
5	4341825	Pin	1
6	302465	Roll Pin	1
7	15222	Cotter Pin	4
8	4242899	Pin	4
9	~~4329736~~		
	4397079	Chain Anchor	2
10	4337117	Leaf Chain - Fixed Length (Lift Height 3968mm/156.2in)	2
10	4337119	Leaf Chain - Fixed Length (Lift Height 4268mm/168in)	2
10	4337121	Leaf Chain - Fixed Length (Lift Height 4568mm/179.8in)	2
10	4337125	Leaf Chain - Fixed Length (Lift Height 4868mm/191.7in and Lift Height 6068mm/238.9in)	2
10	4337132	Leaf Chain - Fixed Length (Lift Height 5468mm/215.3in)	2
10	4337130	Leaf Chain - Fixed Length (Lift Height 6518mm/256.6in)	2
11	4187692	Locknut	4
12	4057611	Clamp	1
13	4231398	Clamp	1
14	. . . . .	Free Lift Cylinder (☞Figure 20-28)	1
15	4029443	Nut , Castle	2
16	4175491	Restraint - Chain Anchor nut, double	1
17	4133281	Capscrew	1
18	~~4329735~~		
	4397073	Chain Anchor	2
19	129387	Shim (0.020 in.)	AR
20	4249506	Load Roller	2
20	4249505	Load Roller (Optional)	2
21	4291253	Flow Valve - Hose Burst Control	1
22	4219867	Nut , Castle	2
23	1581827	Capscrew	2
24	1596404	Capscrew	2
25	~~4682364~~		
	4730772	Bracket (FL Supply Support)	1
26	4185431	Capscrew	2
27	1354902	Spacer	4

©2026 HYSTER COMPANY

MAST ASSEMBLY

THREE STAGE FULL FREE-LIFT 3.0-3.5T (A2M4) – PAGE 3 OF 3

ITEM	PART NO.	DESCRIPTION	QTY
28	~~2056815~~		
	15224	Cotter Pin	2
29	4249630	Crosshead	1

©2026 HYSTER COMPANY

MAIN LIFT CYLINDER (FIGURE 20-27)

THREE STAGE FULL FREE-LIFT — 3.0-3.5T (A2M4)

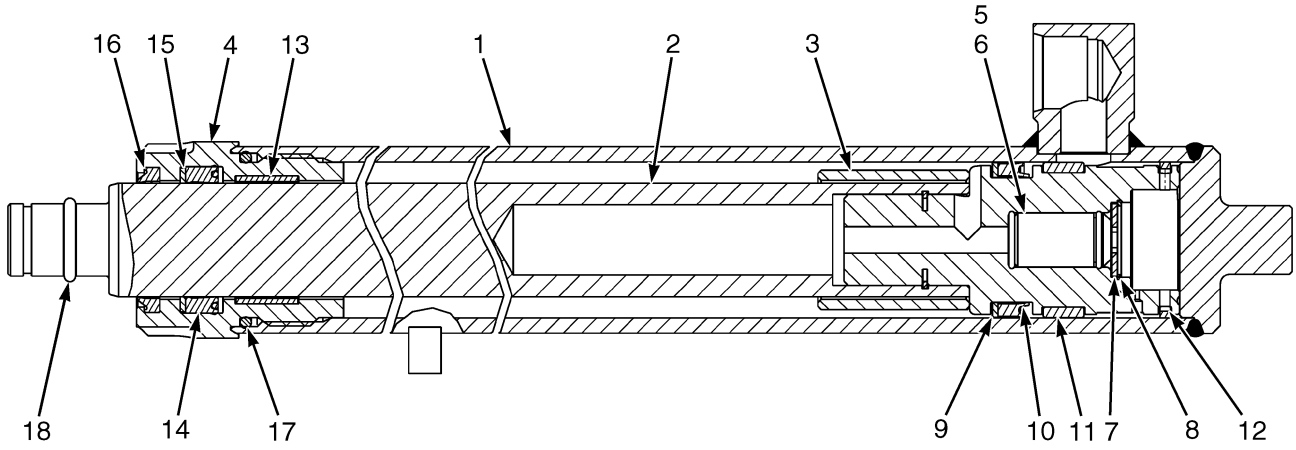

BP170987

ITEM	PART NO.	DESCRIPTION	QTY
	4681011	Lift Cylinder (Lift Height 3968mm/156.2in)	1
	4681013	Lift Cylinder (Lift Height 4268mm/168in)	1
	4681015	Lift Cylinder (Lift Height 4568mm/179.8in)	1
	4681017	Lift Cylinder (Lift Height 4868mm/191.7in)	1
	4681021	Lift Cylinder (Lift Height 5468mm/215.3in)	1
	4681025	Lift Cylinder (Lift Height 6068mm/238.9in)	1
	4681056	Lift Cylinder (Lift Height 6518mm/256.6in)	1
1	4250741	Tube Wldmt-Cylinder (Lift Height 3968mm/156.2in)	1
1	4250742	Tube Wldmt-Cylinder (Lift Height 4268mm/168in)	1
1	4250744	Tube Wldmt-Cylinder (Lift Height 4568mm/179.8in)	1
1	4250747	Tube Wldmt-Cylinder (Lift Height 4868mm/191.7in)	1
1	4250750	Tube Wldmt-Cylinder (Lift Height 5468mm/215.3in)	1
1	4250755	Tube Wldmt-Cylinder (Lift Height 6068mm/238.9in)	1
1	4250758	Tube Wldmt-Cylinder (Lift Height 6518mm/256.6in)	1
2	4246631	Rod Assy (Lift Height 3968mm/156.2in)	1
2	4246632	Rod Assy (Lift Height 4268mm/168in)	1
2	4246634	Rod Assy (Lift Height 4568mm/179.8in)	1
2	4246637	Rod Assy (Lift Height 4868mm/191.7in)	1
2	4246640	Rod Assy (Lift Height 5468mm/215.3in)	1
2	4246645	Rod Assy (Lift Height 6068mm/238.9in)	1
2	4246648	Rod Assy (Lift Height 6518mm/256.6in)	1
3	2073087	Spacer (Lift Height 3968mm/156.2in)	1
3	2046164	Spacer (Lift Height 4268mm/168in)	1
3	2046164	Spacer (Lift Height 4568mm/179.8in)	1
3	2073087	Spacer (Lift Height 4868mm/191.7in)	1
3	2077818	Spacer (Lift Height 5468mm/215.3in)	1

ITEM	PART NO.	DESCRIPTION	QTY
3	4658087	Spacer (Lift Height 6068mm/238.9in)	1
3	2077819	Spacer (Lift Height 6518mm/256.6in)	1
4	4615848	Gland	1
5	257913	Check Valve	1
6	190580	O-Ring	1
7	297531	Washer	1
7	637635	Washer (Optional)	1
8	187388	Snap Ring	1
9	335012	Back-Up Ring	1
10	1381063	Piston Seal	1
11	1356751	Wear Ring	1
12	1356748	Piston Ring	1
13	**b** 1380570	Wear Ring	1
13	322902	Wear Ring	1
14	1356749	Rod Seal	1
14	**b** 1356752	Rod Seal	1
15	**a** 322824	Back-Up Ring	1
16	1383063	Rod Wiper	1
16	**b** 1383064	Rod Wiper	1
17	59229	O-Ring	1
18	60836	O-Ring	1
	a 4623974	Kit-Seal	1
	b 4625475	Kit-Seal	1

FOOTNOTES:

a Used on 3968-6518mm.

b Used on 6968mm only.

©2026 HYSTER COMPANY

FREE-LIFT CYLINDER (FIGURE 20-28)

THREE STAGE FULL FREE-LIFT — 3.0-3.5T (A2M4)

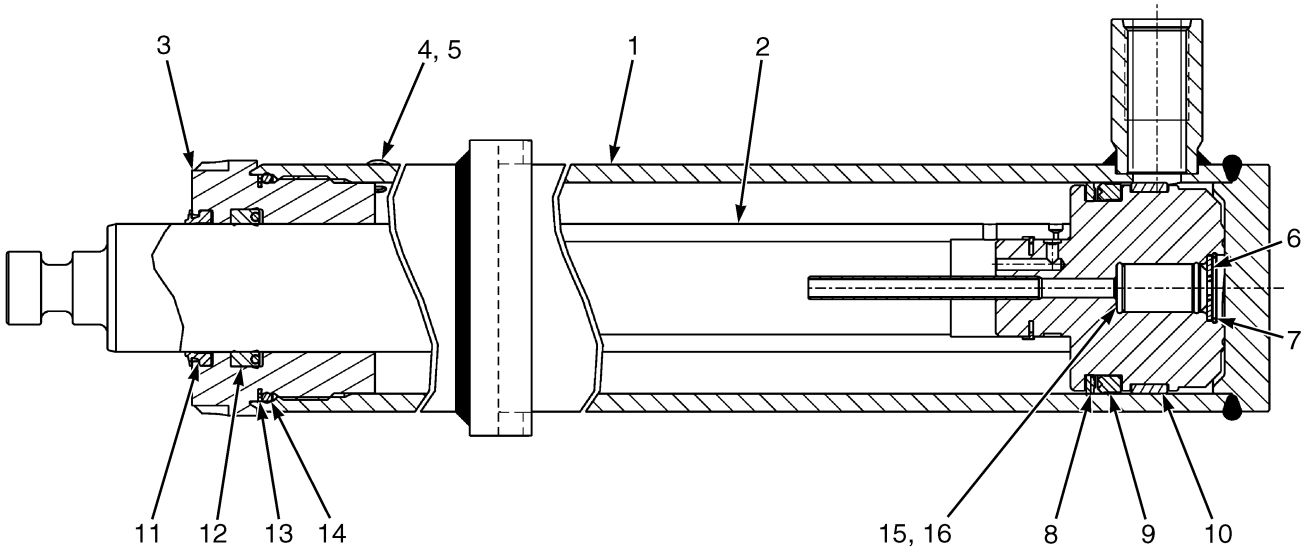

BP170992

ITEM	PART NO.	DESCRIPTION	QTY
	4681931	Cylinder Assy (Lift Height 3968mm/156.2in)	1
	4681932	Cylinder Assy (Lift Height 4268mm/168in)	1
	4681934	Cylinder Assy (Lift Height 4568mm/179.8in)	1
	4681937	Cylinder Assy (Lift Height 4868mm/191.7in)	1
	4681941	Cylinder Assy (Lift Height 5468mm/215.3in)	1
	4680879	Cylinder Assy (Lift Height 6068mm/238.9in)	1
	4680883	Cylinder Assy (Lift Height 6518mm/256.6in)	1
1	4251351	Tube Wldmt-Cylinder (Lift Height 3968mm/156.2in)	1
1	4251352	Tube Wldmt-Cylinder (Lift Height 4268mm/168in)	1
1	4251354	Tube Wldmt-Cylinder (Lift Height 4568mm/179.8in)	1
1	4251357	Tube Wldmt-Cylinder (Lift Height 4868mm/191.7in)	1
1	4251361	Tube Wldmt-Cylinder (Lift Height 5468mm/215.3in)	1
1	4251366	Tube Wldmt-Cylinder (Lift Height 6068mm/238.9in)	1
1	4251370	Tube Wldmt-Cylinder (Lift Height 6518mm/256.6in)	1
2	4180013	Cylinder Rod (Lift Height 6518mm/256.6in)	1
2	4180014	Cylinder Rod (Lift Height 4268mm/168in)	1
2	4180016	Cylinder Rod (Lift Height 4568mm/179.8in)	1
2	4180018	Cylinder Rod (Lift Height 4868mm/191.7in)	1
2	4180022	Cylinder Rod (Lift Height 5468mm/215.3in)	1
2	4180026	Cylinder Rod (Lift Height 6068mm/238.9in)	1
2	4180029	Cylinder Rod (Lift Height 6518mm/256.6in)	1
3	4601463	Gland	1
4	190887	Sealing Ring	1
5	1361302	Screw	1
6	297531	Washer	1
6	637635	Washer (Optional)	1
7	187388	Snap Ring	1
8	4248918	Back-UP Ring	1
9	4248915	Seal , Rod	1

ITEM	PART NO.	DESCRIPTION	QTY
10	636941	Wear Ring	1
11	1463108	Rod Wiper	1
12	1622946	Rod Seal	1
13	164840	Back-Up Ring	1
14	15880	O-Ring	1
15	297538	Check Valve	1
16	190580	O-Ring	1
	4681458	Kit-Seal	1

©2026 HYSTER COMPANY

NOTES

HEADER HOSE AND ATTACHING PARTS (FIGURE 20-29)

THREE STAGE FULL FREE-LIFT — A2M4

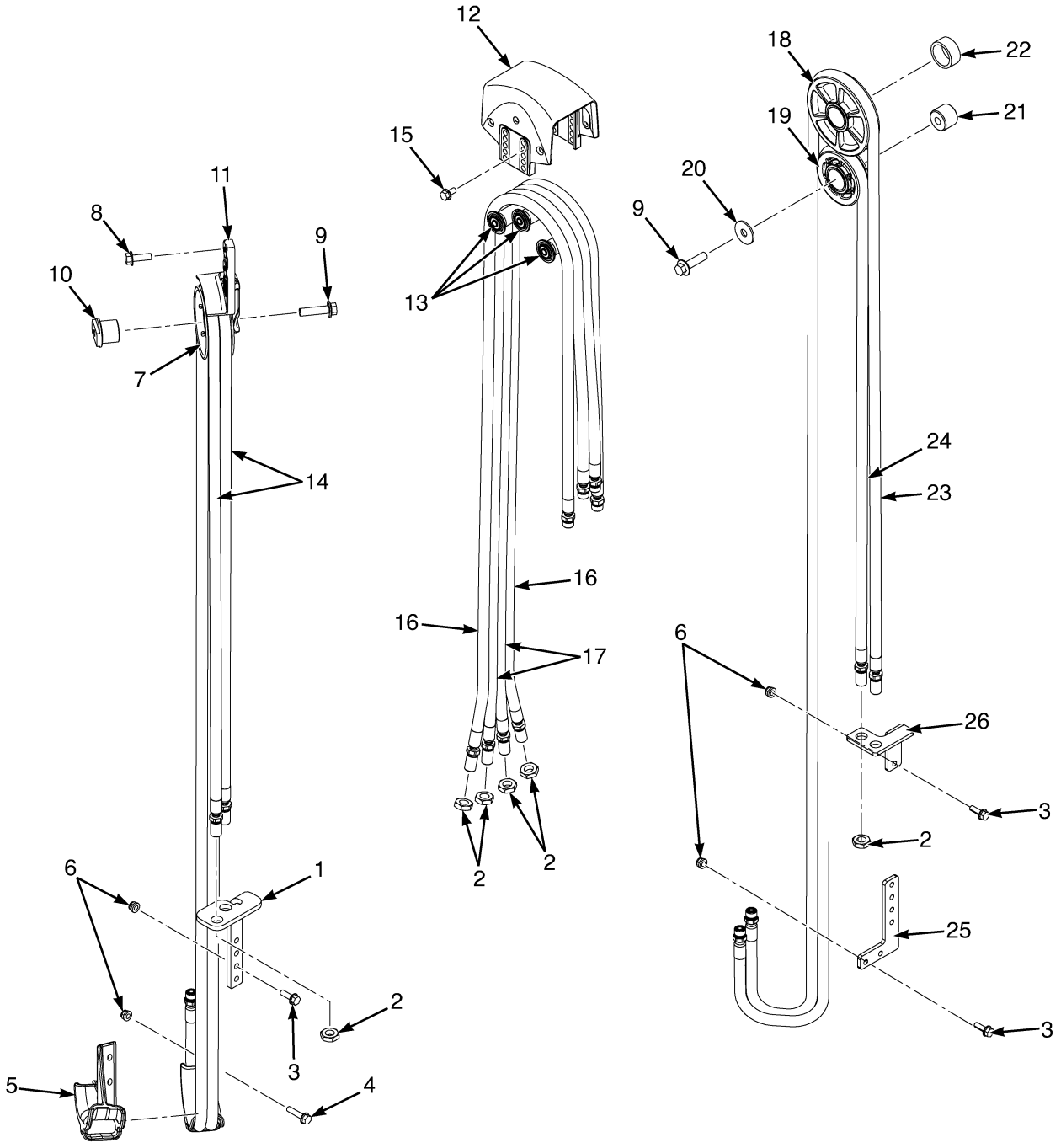

©2026 HYSTER COMPANY

HEADER HOSE AND ATTACHING PARTS

THREE STAGE FULL FREE-LIFT – A2M4

ITEM	PART NO.	DESCRIPTION	QTY
1	4256970	Bracket	1
2	4187786	Nut	8
3	4185429	Capscrew	6
4	4185431	Capscrew	2
5	4682363	Bracket	1
6	4187690	Locknut	8
7	4177916	Hose Sheave	1
7	4360357	Hose Sheave	1
8	4185434	Capscrew	2
9	4260495	Capscrew (3rd and 4th function)	2
9	4260495	Capscrew (3rd Function)	1
9	4187673	Capscrew (4th Function)	1
10	4013267	Stubshaft	1
10	4360355	Stubshaft	1
11	4250570	Bracket	1
12	4696052	Crosshead - Hose Guide	1
13	4678185	Roller (Free-Lift Header Hose)	1
14	4685212	Header Hose (Lift Height 3960-4460/3618-4118mm)	2
14	4685213	Header Hose (Lift Height 4610/4268mm)	2
14	4685215	Header Hose (Lift Height 4910/4568mm)	2
14	4685217	Header Hose (Lift Height 5210/4868mm)	2
14	4685223	Header Hose (Lift Height 6110/5768mm)	2
14	4685225	Header Hose (Lift Height 6410/6068mm)	2
14	4685228	Header Hose (Lift Height 6860/6518mm)	2
15	4223693	Capscrew	4
16	4685535	Header Hose (Lift Height 3960-4460/3618-4118mm)	2
16	4685536	Header Hose (Lift Height 4610/4268mm)	2
16	4685538	Header Hose (Lift Height 4910/4568mm)	2
16	4685541	Header Hose (Lift Height 5210/4868mm)	2
16	4685548	Header Hose (Lift Height 6110/5768mm)	2
16	4685551	Header Hose (Lift Height 6410/6068mm)	2
16	4685555	Header Hose (Lift Height 6860/6518mm)	2
17	4685534	Header Hose (Lift Height 3960-4460/3618-4118mm)	2
17	4685535	Header Hose (Lift Height 4610/4268mm)	2
17	4685537	Header Hose (Lift Height 4910/4568mm)	2
17	4685540	Header Hose (Lift Height 5210/4868mm)	2
17	4685547	Header Hose (Lift Height 6110/5768mm)	2
17	4685550	Header Hose (Lift Height 6410/6068mm)	2
17	4685554	Header Hose (Lift Height 6860/6518mm)	2
18	4048784	Hose Sheave	1
18	4050091	Bushing	1
18	4326458	Hose Sheave	1
18	4360417	Hose Sheave	1
19	4048783	Hose Sheave	1
19	4050091	Bushing	1
19	4326457	Hose Sheave	1
19	4360416	Hose Sheave	1
20	1345190	Washer	1
21	4048778	Stubshaft	1
21	4327882	Stubshaft	1

©2026 HYSTER COMPANY

HEADER HOSE AND ATTACHING PARTS

THREE STAGE FULL FREE-LIFT – A2M4

ITEM	PART NO.	DESCRIPTION	QTY
21	4360356	Stubshaft	1
22	4174849	Spacer	1
22	4335385	Spacer	1
23	4685240	Header Hose (Lift Height 3960-4460/3618-4118mm)	1
23	4685241	Header Hose (Lift Height 4610/4268mm)	1
23	4685243	Header Hose (Lift Height 4910/4568mm)	1
23	4685245	Header Hose (Lift Height 5210/4868mm)	1
23	4685251	Header Hose (Lift Height 6110/5768mm)	1
23	4685253	Header Hose (Lift Height 6410/6068mm)	1
23	4685256	Header Hose (Lift Height 6860/6518mm)	1
24	4685268	Header Hose (Lift Height 3960-4460/3618-4118mm)	1
24	4685269	Header Hose (Lift Height 4610/4268mm)	1
24	4685271	Header Hose (Lift Height 4910/4568mm)	1
24	4685273	Header Hose (Lift Height 5210/4868mm)	1
24	4685279	Header Hose (Lift Height 6110/5768mm)	1
24	4685281	Header Hose (Lift Height 6410/6068mm)	1
24	4685285	Header Hose (Lift Height 6860/6518mm)	1
25	4256971	Bracket	1
26	4256973	Bracket	1

©2026 HYSTER COMPANY

NOTES

MAST ELECTRICAL (FIGURE 20-30)

WIRE TAKE-UP — A2M4

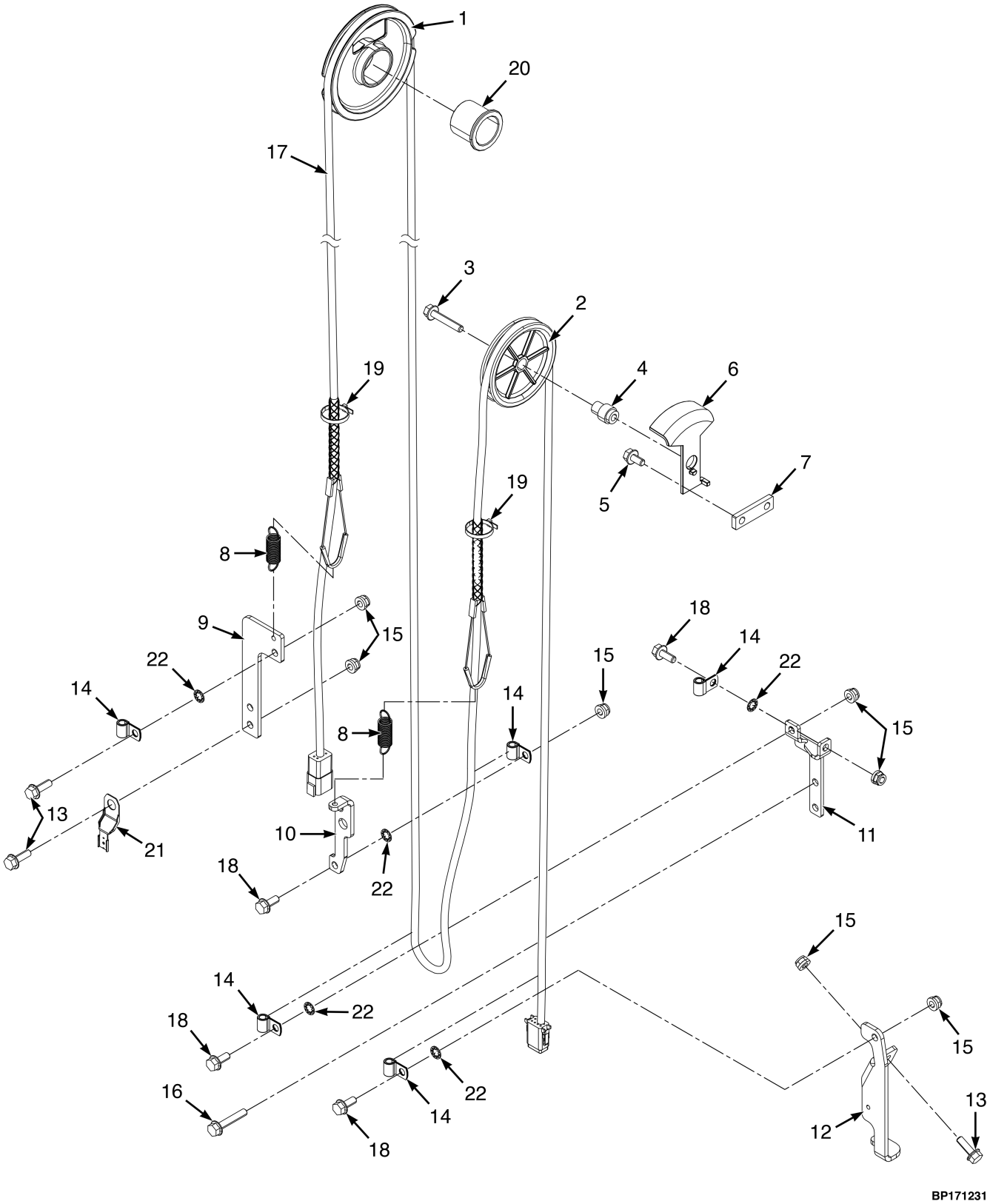

©2026 HYSTER COMPANY

MAST ELECTRICAL

WIRE TAKE-UP – A2M4

ITEM	PART NO.	DESCRIPTION	QTY
1	4314974	Sheave	1
2	4148708	Sheave (Reach Mast Wire)	1
3	4193301	Capscrew	1
4	4269611	Bushing	1
5	**a** 4223693	Capscrew	1
6	4269612	Cap	1
7	**a** 4270626	Bracket	1
8	4692425	Spring	2
9	**a** 4270375	Bracket - Power to Carriage Termination	1
10	4347420	Bracket - Mast Cable Mounting Inner Mid	1
11	4269609	Bracket - Mast Cable Mounting Inner Bottom	1
12	4335147	Bracket - Power to Carriage Termination	1
13	4185429	Capscrew	4
14	2304805	Hose Clamp	5
15	4187690	Locknut	10
16	4193301	Capscrew	2
17	4692191	Cable Assy - Power to Carriage (Lift Height 4610mm)	1
17	4692709	Cable Assy - Power to Carriage (Lift Height 4910mm)	1
17	4692711	Cable Assy - Power to Carriage (Lift Height 5210mm)	1
17	4692735	Cable Assy - Power to Carriage (Lift Height 6110mm)	1
18	4188211	Capscrew	4
19	137852	Strap Clamp	2
20	4314555	Bushing	1
21	1582442	Clip	1
22	296360	Washer	4

FOOTNOTES:

a Without 3F Header Hose only.

NOTES

©2026 HYSTER COMPANY

21 FORKS AND LOAD BACKREST

SECTION 21
FORKS AND LOAD BACKREST

DESCRIPTION **PAGE**

FORKS
BOLZONI 21-2
CASCADE - OPTIONAL 21-4
LOAD BACKREST EXTENSION 21-6
DROP CENTER 21-8

©2026 HYSTER COMPANY

FORKS (FIGURE 21-1)
BOLZONI

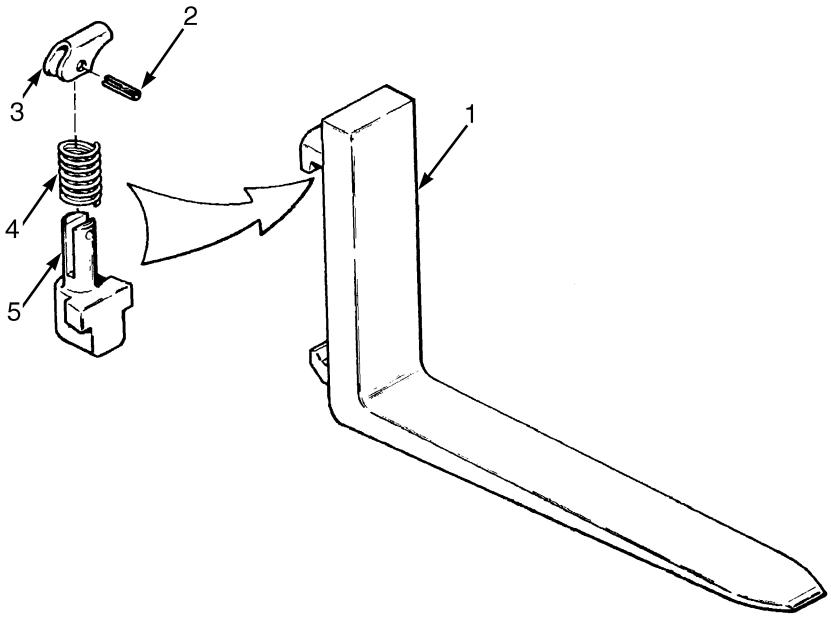

HP120793

KEY:
A: Class II Std
B: Class III Std
C: Class II Polished and Full Bottom Taper
D: Class III Polished and Full Bottom Taper

ITEM	PART NO.	DESCRIPTION	QTY A	QTY B	QTY C	QTY D
1	4083371	Fork (40 in.)	2	..	..	..
1	4083874	Fork (42 in.)	..	2	..	..
1	4083370	Fork (36 in.)	2	..	..	..
1	4083372	Fork (42 in.)	2	..	..	..
1	4083374	Fork (54 in.)	2	..	..	..
1	4083870	Fork (36 in.)	..	2	..	..
1	4083876	Fork (48 in.)	..	2	..	..
1	4083878	Fork (54 in.)	..	2	..	..
1	4083881	Fork (60 in.)	..	2	..	..
1	4083883	Fork (72 in.)	..	2	..	..
1	4083678	Fork (36 in.)	..	..	2	..
1	4083679	Fork (42 in.)	..	..	2	..
1	4083680	Fork (48 in.)	..	..	2	..
1	4083686	Fork (42 in.)	..	..	..	2
1	4083687	Fork (47.5 in.)	..	..	..	2
1	4186969	Fork (48 in.)	..	..	..	2
1	4083688	Fork (54 in.)	..	..	..	2
1	4083873	Fork (43in) (Manufacturing Option)	..	2	..	..
1	4083875	Fork (47in) (Manufacturing Option)	..	2	..	..
1	4083879	Fork (55in) (Manufacturing Option)	..	2	..	..
1	4083880	Fork (59in) (Manufacturing Option)	..	2	..	..
1	4083882	Fork (72 in.) (Manufacturing Option)	..	2	..	..

©2026 HYSTER COMPANY

KEY:
A: Class II Std
B: Class III Std
C: Class II Polished and Full Bottom Taper
D: Class III Polished and Full Bottom Taper

ITEM	PART NO.	DESCRIPTION	QTY A	QTY B	QTY C	QTY D
2	. . . . .	Pin	1	..	..	..
2	4192163	Roll Pin	..	1	..	..
3	. . . . .	Spring	1	..	..	..
3	. . . . .	Spring	..	1	..	..
4	. . . . .	Lever	1	..	..	..
4	. . . . .	Lever	..	1	..	..
5	. . . . .	Pin	1	..	..	..
5	4199465	Pin	..	1	..	..
	4083888	Kit Fork Latch Mechanism (Class 2A)	1	..	..	..
	4031066	Kit-Latch Mechanism (Class 3A/4A)	..	2	..	..

FORKS (FIGURE 21-2)
CASCADE — OPTIONAL

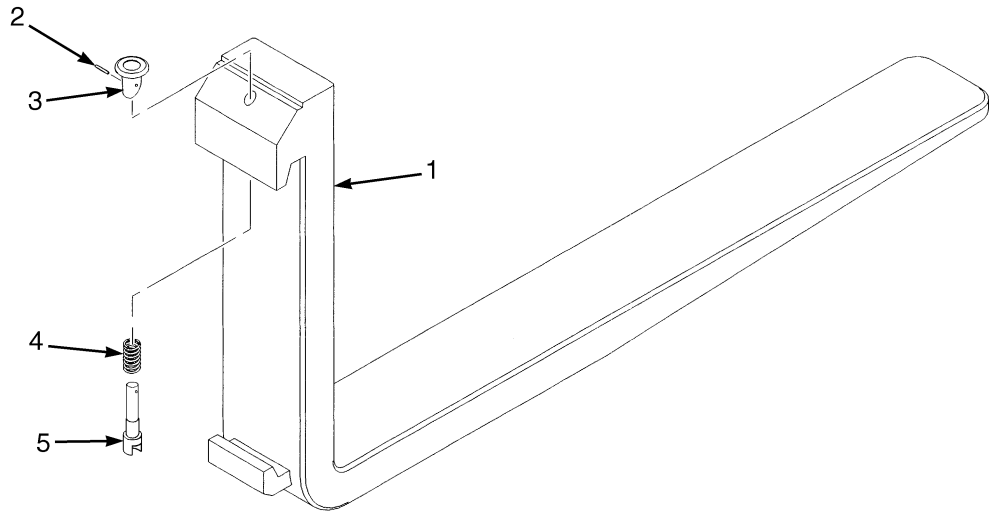

BP000187

KEY:
A: Class II Std
B: Class III Std
C: Class II Polished and Full Bottom Taper
D: Class III Polished and Full Bottom Taper

ITEM	PART NO.	DESCRIPTION	QTY A	QTY B	QTY C	QTY D
1	1308093	Fork (40 in.)	2	..	..	..
1	367420	Fork (42 in.)	..	2	..	..
1	384211	Fork (36 in.)	2	..	..	..
1	384213	Fork (42 in.)	2	..	..	..
1	384214	Fork (48 in.)	2	..	..	..
1	384215	Fork (54 in.)	2	..	..	..
1	384216	Fork (60 in.)	2	..	..	..
1	367419	Fork (36 in.)	..	2	..	..
1	367421	Fork (48 in.)	..	2	..	..
1	367422	Fork (54 in.)	..	2	..	..
1	367423	Fork (60 in.)	..	2	..	..
1	367424	Fork (72 in.)	..	2	..	..
1	1338087	Fork (36 in.)	..	..	2	..
1	1338088	Fork (42 in.)	..	..	2	..
1	1338089	Fork (48 in.)	..	..	2	..
1	3020388	Fork (48 in.)	..	..	..	2
1	1338097	Fork (42 in.)	..	..	..	2
1	1338098	Fork (47.5 in.)	..	..	..	2
1	1332745	Fork (54 in.)	..	..	..	2
2	1523734	Pin , Pin Retainer	1	1	..	..
3	1523732	Knob	1	1	..	..

©2026 HYSTER COMPANY

KEY:
A: Class II Std
B: Class III Std
C: Class II Polished and Full Bottom Taper
D: Class III Polished and Full Bottom Taper

ITEM	PART NO.	DESCRIPTION	QTY A	QTY B	QTY C	QTY D
4	1500782	Spring	1	..	..	..
4	1500784	Spring	..	1	..	..
5	1523733	Pin	1	..	..	..
5	1523737	Pin	..	1	..	..
	4033434	Kit-Latch (Cascade)	1	..	..	..
	4033435	Kit-Latch (Class III)	..	1	..	..

©2026 HYSTER COMPANY

LOAD BACKREST EXTENSION (FIGURE 21-3)

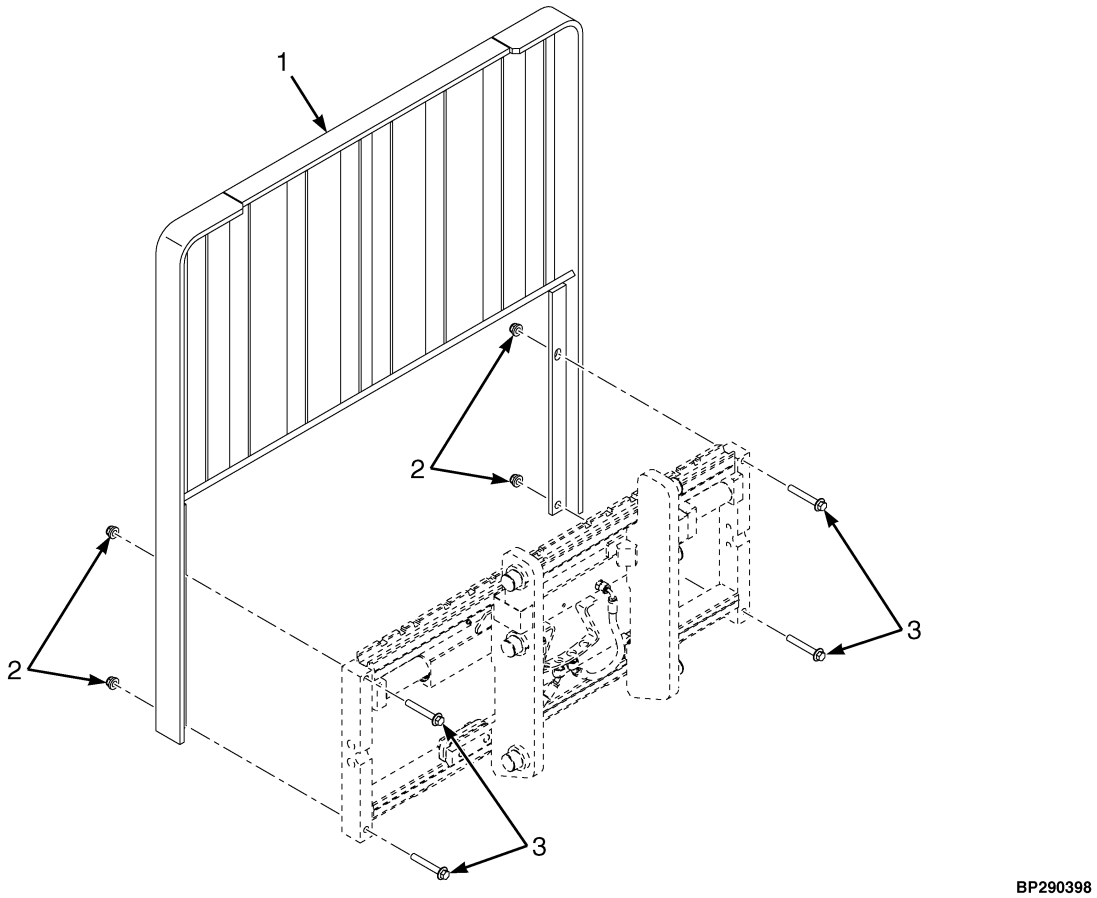

KEY:
A: Class II
B: Class III

ITEM	PART NO.	DESCRIPTION	QTY A	QTY B
1	4119248	Load Backrest (42 in.) (1220mm High)	1	..
1	4243899	Load Backrest (42 in.) (1524mm High)	1	..
1	4211908	Load Backrest (42 in.) (915mm High)	..	1
1	4119242	Load Backrest (42 in.) (1220mm High)	..	1
1	4269429	Load Backrest (42 in.) (1524mm High)	..	1
1	4119243	Load Backrest (48 in.) (1220mm High)	..	1
1	4269430	Load Backrest (48 in.) (1524mm High)	..	1
1	4269432	Load Backrest (54 in.) (915mm High)	..	1
1	4119244	Load Backrest (54 in.) (1220mm High)	..	1
1	4269433	Load Backrest (54 in.) (1524mm High)	..	1
1	4211911	Load Backrest (36in / 915mm High) (42in)	1	..
2	4187692	Locknut	4	4
3	**a** 4198623	Capscrew	4	4
3	1581593	Capscrew (Alternate Part)	4	4
3	**b** 4188999	Capscrew	4	4
3	1581830	Capscrew (Alternate Part)	4	4

©2026 HYSTER COMPANY

FOOTNOTES:

a ISS Crg

b Std Crg

LOAD BACKREST EXTENSION (FIGURE 21-4)

DROP CENTER

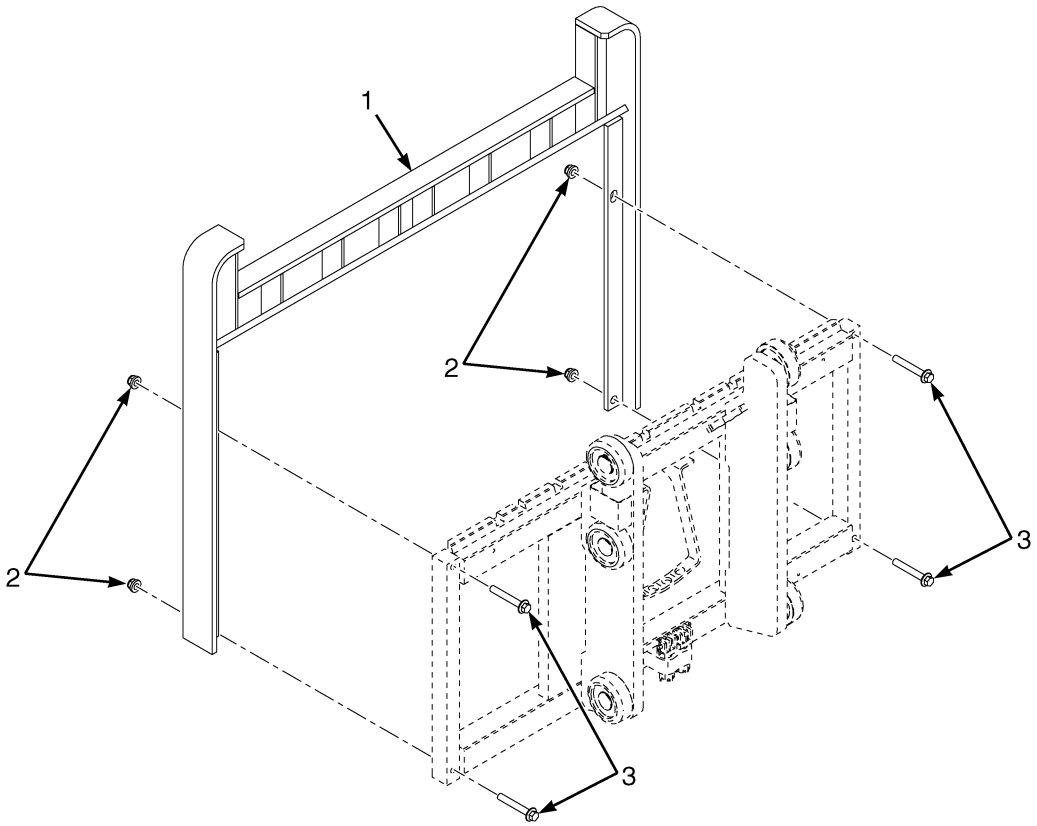

ITEM	PART NO.	DESCRIPTION	QTY
1	4211909	Load Backrest (42 in.) (915mm High) (Class III)	1
1	4269431	Load Backrest (54 in.) (915mm High) (Class III)	1
2	4187692	Locknut	4
3	**a** 4198623	Capscrew	4
3	**b** 4188999	Capscrew	4

FOOTNOTES:

a ISS Crg

b Std Crg

©2026 HYSTER COMPANY

22 OPTIONS

SECTION 22
OPTIONS

DESCRIPTION **PAGE**

ACCESSORY BAR
FIXED 22-3
SWING OUT - FIGURE 8 OHG 22-4
SWING OUT - RECTANGULAR OHG 22-6
ACCESSORY BAR OPTION
FIXED BAR - MONITOR HOLDER (→ 3/2025) 22-8
FIXED BAR - MONITOR HOLDER (3/2025 →) 22-10
FIXED BAR - SCANNER HOLDER 22-11
FIXED BAR - TABLET HOLDER 22-13
FIXED BAR - CUP HOLDER 22-15
FIXED BAR - PHONE HOLDER 22-17
FIXED BAR - TAPE ROLL HOLDER 22-19
SWING OUT BAR - MONITOR AND SCANNER AND STRETCH WRAP 22-21
ACCUMULATOR
HOIST 22-23
AUXILIARY EXTENSION TUBES
ISS CARRIAGE - TWO STAGE LIMITED FREE-LIFT 22-71
ISS CARRIAGE - TWO AND THREE STAGE FULL FREE-LIFT 22-73
STANDARD CARRIAGE - TWO STAGE LIMITED FREE-LIFT (→ PENDING PER ECN 169336) 22-66
STANDARD CARRIAGE - TWO STAGE LIMITED FREE-LIFT (PENDING PER ECN 169336 →) 22-68
STANDARD CARRIAGE - TWO AND THREE STAGE FFL (→ PENDING PER ECN 169336) 22-69
STANDARD CARRIAGE - TWO AND THREE STAGE FFL (PENDING PER ECN 169336 →) 22-70
BELLY SCREEN 22-24
BLOCK HEATER
120V - YANMAR 2.2L 22-25
120V - YANMAR 3.0L AND 3.3L 22-26
CONVENIENCE TRAY 22-27
TYPE S 22-28
DUAL MIRRORS
RECTANGLE OHG 22-29
FAN
MOUNTED (→ 6/2022) 22-30
MOUNTED - NON CAB (6/2022 →) 22-31
MOUNTED - CAB (6/2022 →) 22-33
FIRE EXTINGUISHER
COWL MOUNTED - WITH OAS (5/2022 →) 22-37
COWL MOUNTED - WITHOUT OAS (5/2022 →) 22-38
FIGURE 8 W/ CAB (→ 5/2022) 22-36
MANUFACTURING OPTION 22-39
WITHOUT CAB (→ 5/2022) 22-35
FORK LASER
3FFL AND 2LFL 22-40
FORK POSITIONER
BOLZONI - LIMITED FREE-LIFT 22-76
BOLZONI - FULL FREE-LIFT 22-80
CASCADE - LIMITED FREE-LIFT 22-78
CASCADE - FULL FREE-LIFT 22-82
FORK POSITIONER ASSEMBLY
BOLZONI 22-88

©2026 HYSTER COMPANY

SECTION 22
OPTIONS

DESCRIPTION	PAGE
CASCADE	22-84
LPG TANK BRACKET	
INTERLOCK SENSOR	22-42
INTERLOCK SENSOR - ALTERNATE CONFIGURATION	22-44
OBJECT DETECTION SYSTEM	
PAGE 1 OF 5 - ARRANGEMENT	22-46
PAGE 2 OF 5 - CONTROLLER	22-48
PAGE 3 OF 5 - SIDE SENSORS	22-50
PAGE 4 OF 5 - PROXIMITY SENSOR	22-52
PAGE 5 OF 5 - REAR SENSOR (→ 3/2022)	22-54
PAGE 5 OF 5 - REAR SENSOR (3/2022 →)	22-56
OVERHEAD GUARD ACCESSORY OPTIONS	
MIRRORS AND REAR HANDLE - FIGURE 8 OHG	22-58
PANORAMIC MIRROR	
RECTANGLE OHG	22-60
QUICK DISCONNECT FITTINGS	
AUXILIARY EXTENSION TUBES	22-74
REAR CAMERA	22-61
STRING CUTTER	22-62
TILT CYLINDER BOOTS	22-63
TOP AND FRONT SUN SHADE	22-64

©2026 HYSTER COMPANY

ACCESSORY BAR (FIGURE 22-1)

FIXED

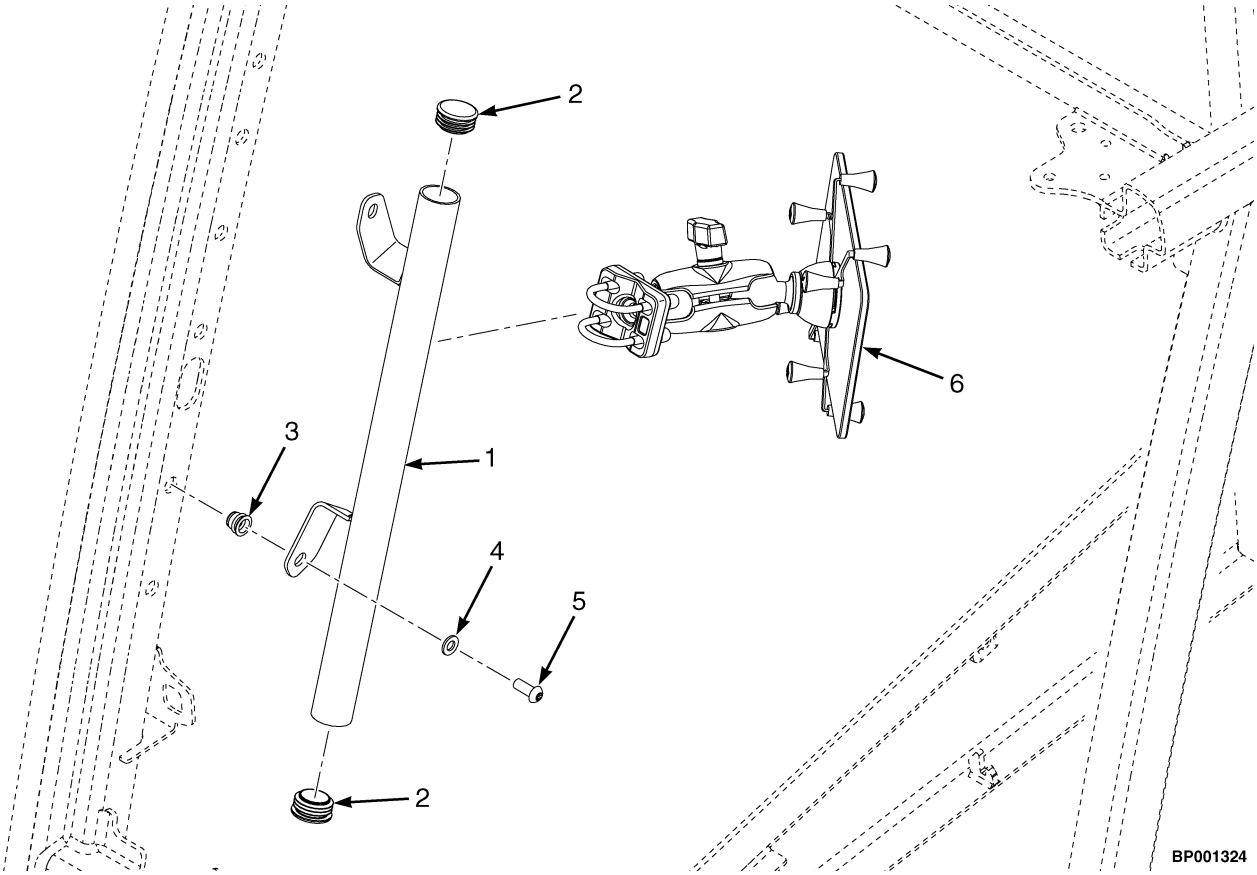

ITEM	PART NO.	DESCRIPTION	QTY
1	4274072	Bracket Wldmt - Fixed Accessory Bar	1
2	4174035	Plug	2
3	1531557	Insert	2
3	1530243	Insert (Alternate Part)	2
4	375629	Washer	2
5	1529990	Screw	2
6	. . . . .	Accessory Option (☞Figure 22-4, ☞Figure 22-6, ☞Figure 22-7, ☞Figure 22-8, ☞Figure 22-9, ☞Figure 22-10)	1

ACCESSORY BAR (FIGURE 22-2)

SWING OUT — FIGURE 8 OHG

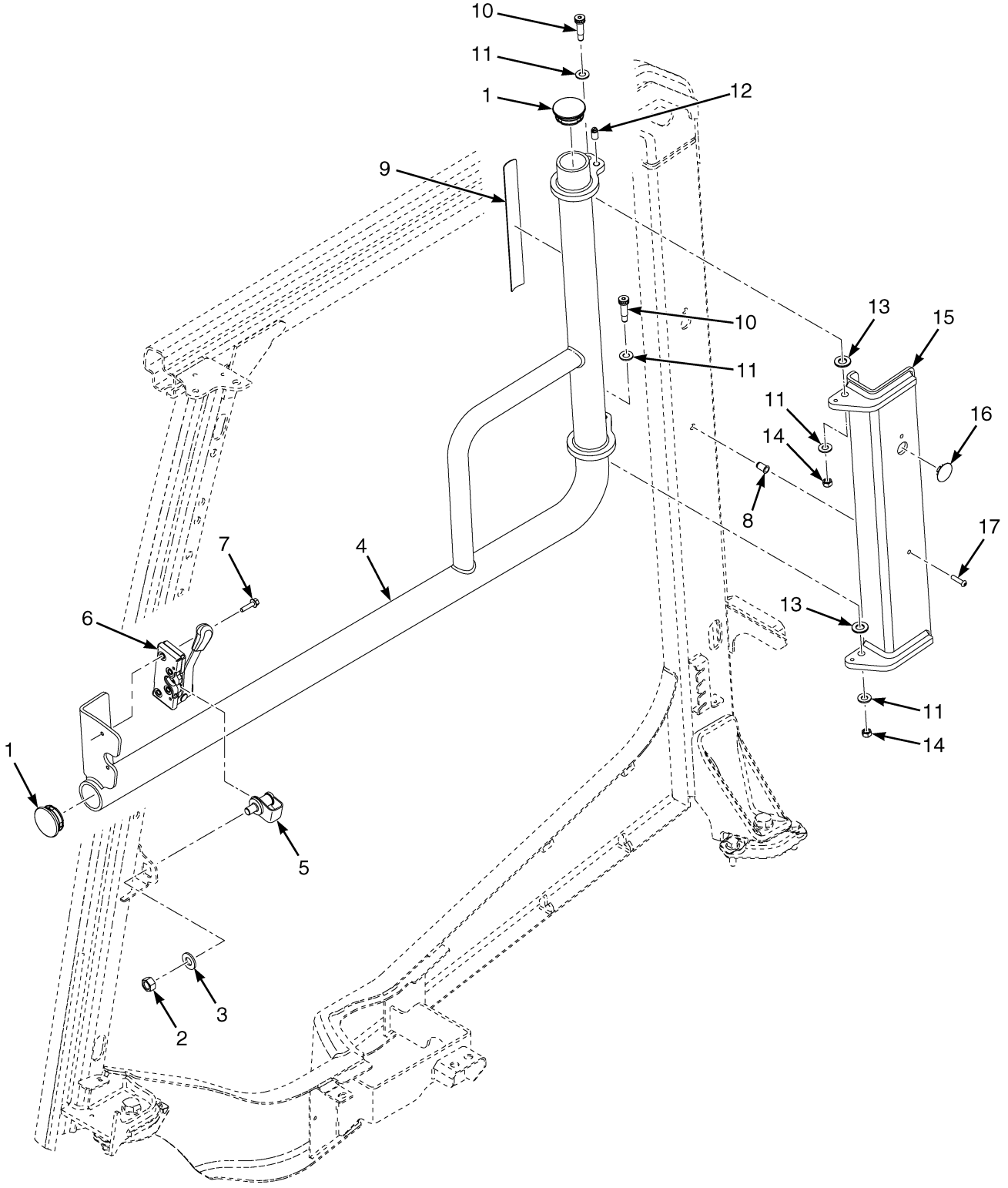

©2026 HYSTER COMPANY

ITEM	PART NO.	DESCRIPTION	QTY
1	4263845	End Plug	2
2	1581848	Nut	1
3	1581853	Washer	1
4	4276392	Operator Accessory - Bar	1
4	4364651	Operator Accessory - Bar (Alternate Part)	1
5	4279004	Latch - Striker Pin	1
6	4276377	Latch	1
7	1527878	Capscrew	2
8	1531001	Insert	2
9	4276391	Label (Load Capacity)	1
10	4150864	Screw	2
11	320159	Washer	4
12	4276387	Plunger	1
13	4150893	Thrust Bearing	2
14	302400	Nut	2
15	4276370	Bar (Mounting Wldmnt)	1
15	4398926	Bar (Mounting Wldmnt) (Alternate Part)	1
16	1599415	Plug (Yellow)	1
17	4242165	Screw	2
	. . . . .	Accessory Bar Option (☞Figure 22-4, ☞Figure 22-6, ☞Figure 22-7, ☞Figure 22-8)	1

ACCESSORY BAR (FIGURE 22-3)
SWING OUT — RECTANGULAR OHG

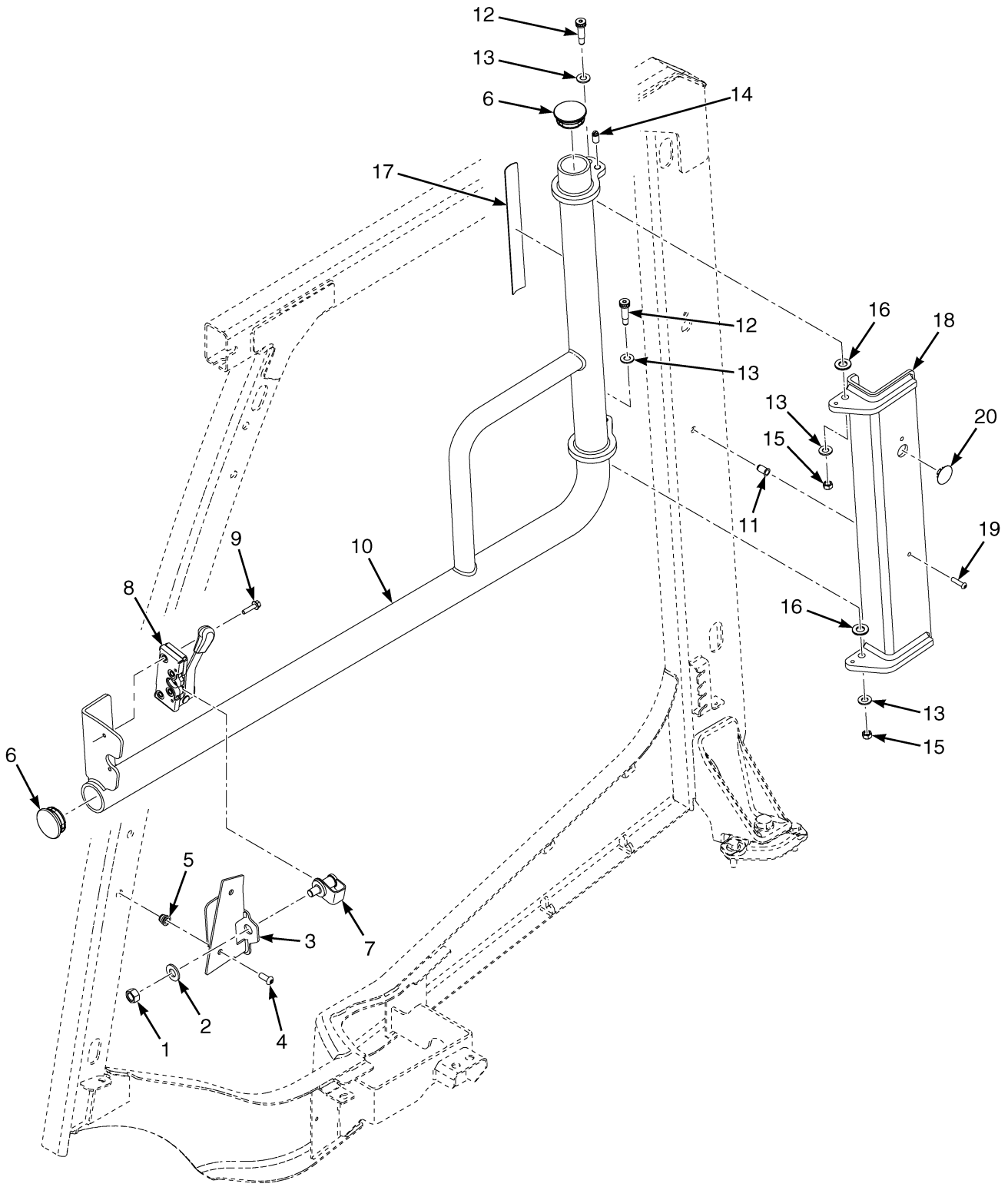

©2026 HYSTER COMPANY

ITEM	PART NO.	DESCRIPTION	QTY
1	1581848	Nut	1
2	1581853	Washer	1
3	4263842	Plate Wldmt (Striker)	1
4	1529990	Screw	2
5	1531557	Insert	2
6	4263845	End Plug	2
7	4279004	Latch - Striker Pin	1
8	4276377	Latch	1
9	1527878	Capscrew	2
10	4276392	Operator Accessory - Bar	1
10	4364651	Operator Accessory - Bar (Alternate Part)	1
11	1531001	Insert	2
12	4150864	Screw	1
13	320159	Washer	4
14	4276387	Plunger	1
15	302400	Nut	2
16	4150893	Thrust Bearing	2
17	4276391	Label (Load Capacity)	1
18	4276370	Bar (Mounting Wldmnt)	1
18	4398926	Bar (Mounting Wldmnt) (Alternate Part)	1
19	4242165	Screw	2
20	1599415	Plug (Yellow)	1
	. . . . .	Accessory Bar Option (☞Figure 22-4, ☞Figure 22-6, ☞Figure 22-7, ☞Figure 22-8)	1

ACCESSORY BAR OPTION (FIGURE 22-4)

FIXED BAR — MONITOR HOLDER (→ 3/2025)

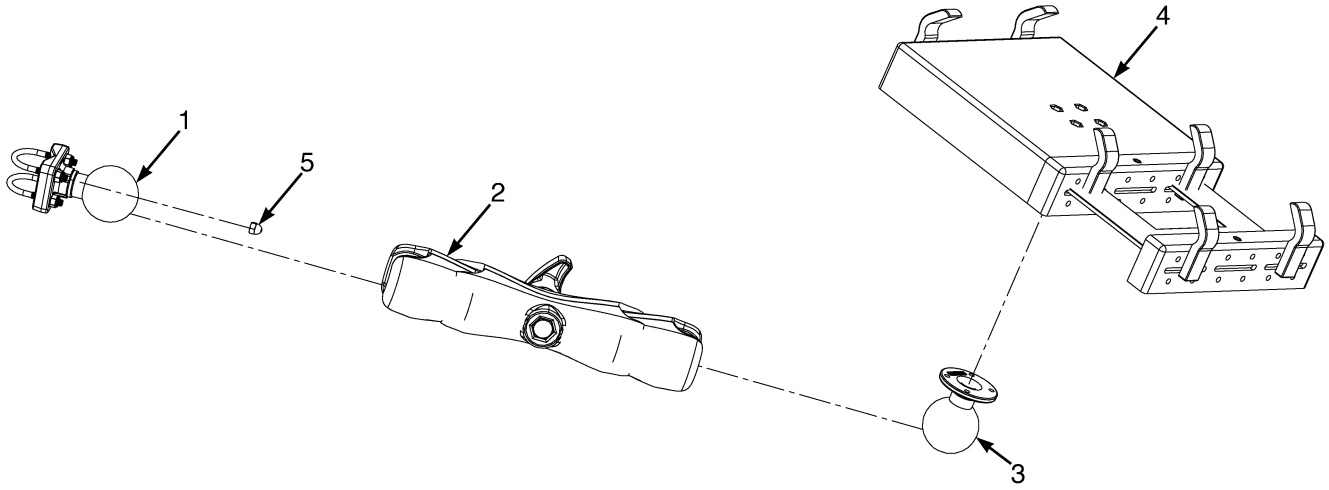

BP001340

©2026 HYSTER COMPANY

ITEM	PART NO.	DESCRIPTION	QTY
1	4697096	Mount , Ball Base	1
2	4697098	Mount , Clamp (Ball Joint)	1
3	4697095	Mount , Ball Socket	1
4	4697097	Mount - Tough Tray	1
5	4318650	Nut (Cap)	4

©2026 HYSTER COMPANY

ACCESSORY BAR OPTION (FIGURE 22-5)

FIXED BAR — MONITOR HOLDER (3/2025 →)

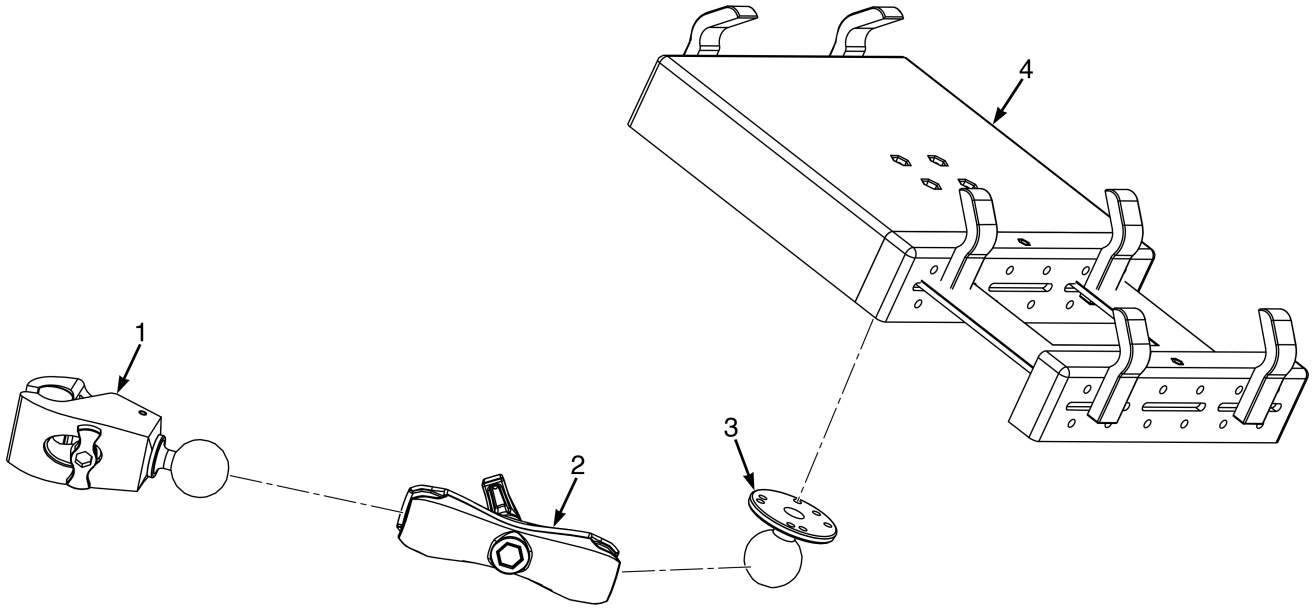

BP001892

ITEM	PART NO.	DESCRIPTION	QTY
1	81016025	Mount (Accessory Bar)	1
2	4099359	Arm	1
3	4709266	Mount , Ball Socket	1
4	4697097	Mount - Tough Tray	1

See Service Manual for service procedures.
©2026 HYSTER COMPANY

ACCESSORY BAR OPTION (FIGURE 22-6)

FIXED BAR — SCANNER HOLDER

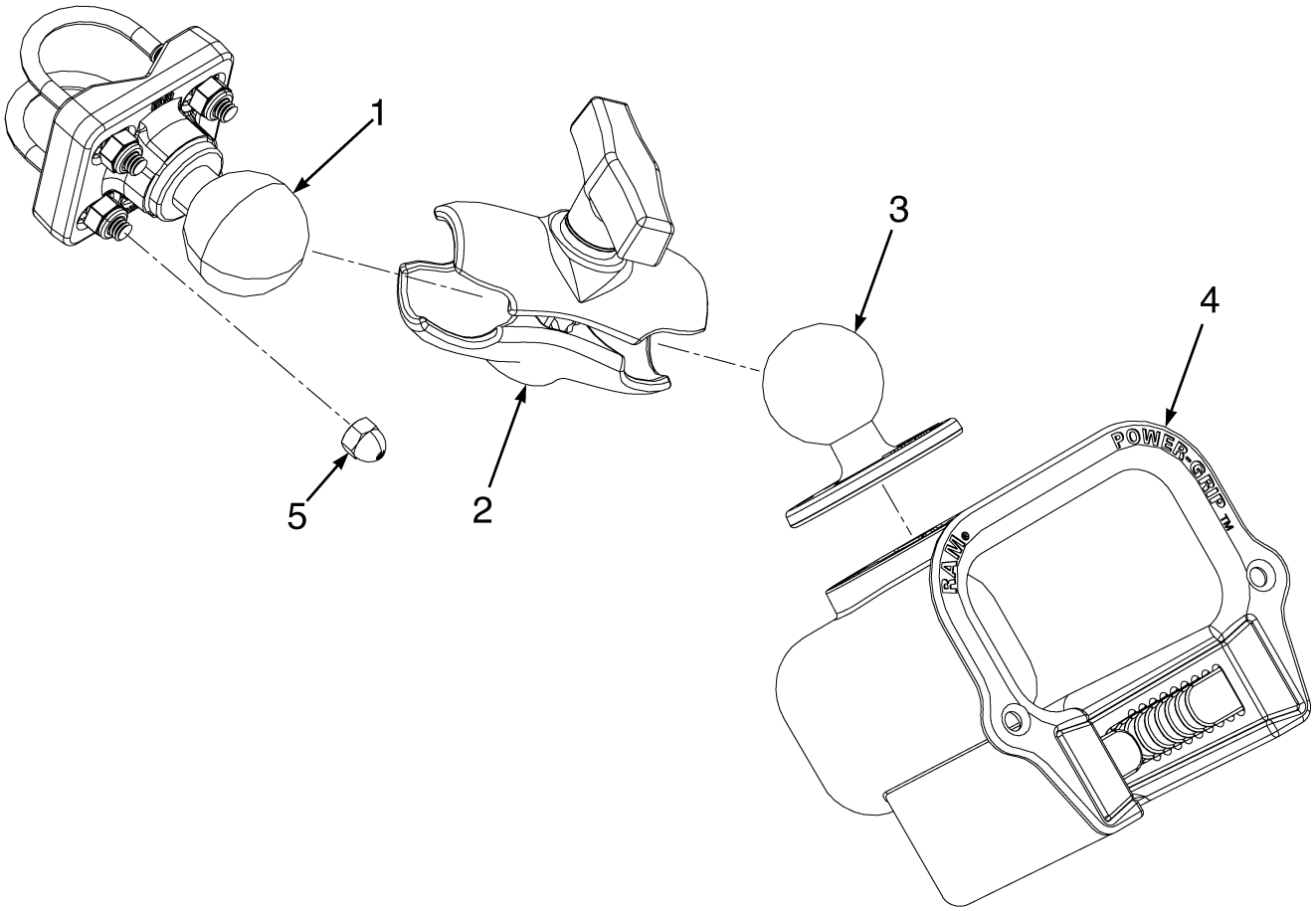

BP001397

ITEM	PART NO.	DESCRIPTION	QTY
1	**a** 4709270	Mount , Ball Base	1
1	**b** 81016025	Mount (Accessory Bar)	1
2	4709264	Mount , Clamp (Ball Joint)	1
3	4709266	Mount , Ball Socket	1
4	4709267	Mount , Scanner Gun Holder	1
5	**a** 4318650	Nut (Cap)	4

FOOTNOTES:

a → 3/2025

b 3/2025 →

©2026 HYSTER COMPANY

ACCESSORY BAR OPTION (FIGURE 22-7)

FIXED BAR — TABLET HOLDER

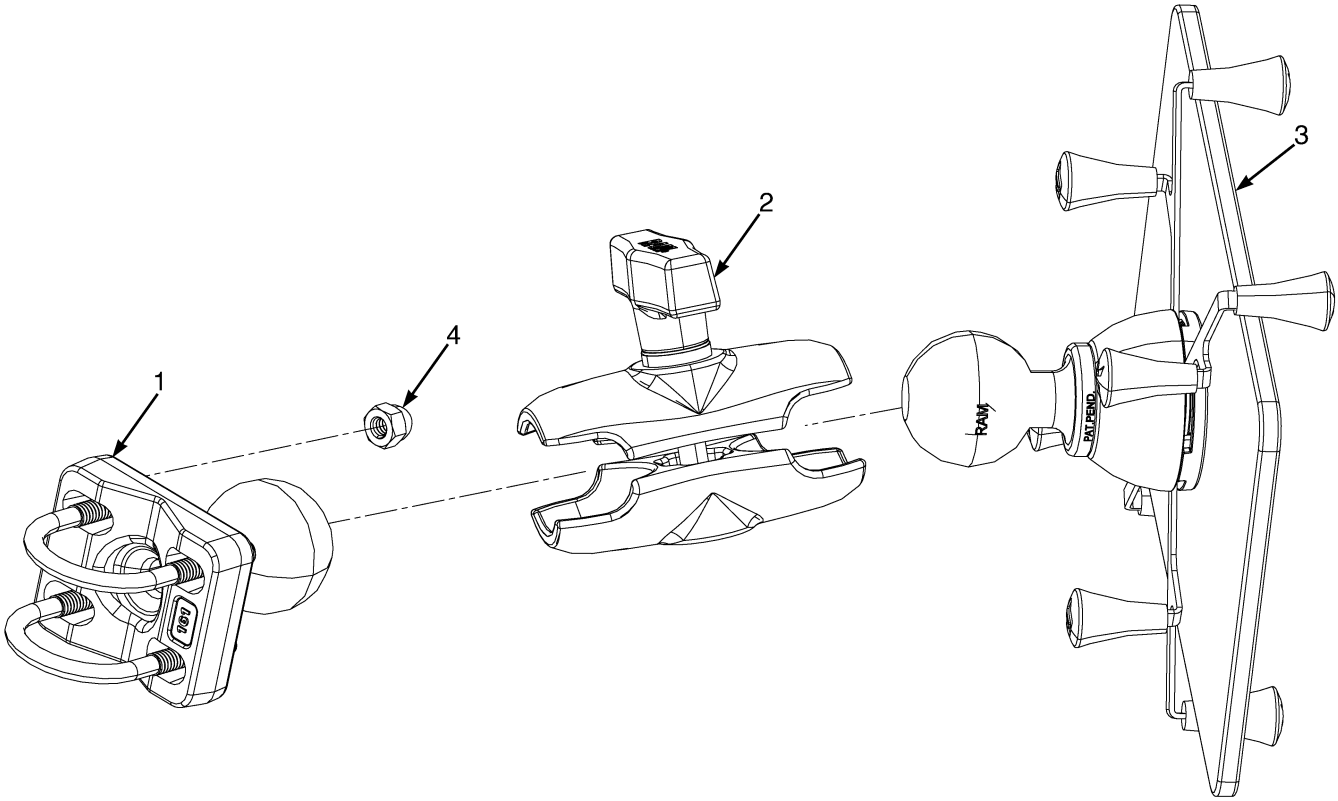

BP001398

ITEM	PART NO.	DESCRIPTION	QTY
1	4709270	Mount , Ball Base	1
2	4709264	Mount , Clamp (Ball Joint)	1
3	4709273	Mount , Tablet Holder (7-8in Tablets)	1
4	4318650	Nut (Cap)	4

©2026 HYSTER COMPANY

ACCESSORY BAR OPTION (FIGURE 22-8)

FIXED BAR — CUP HOLDER

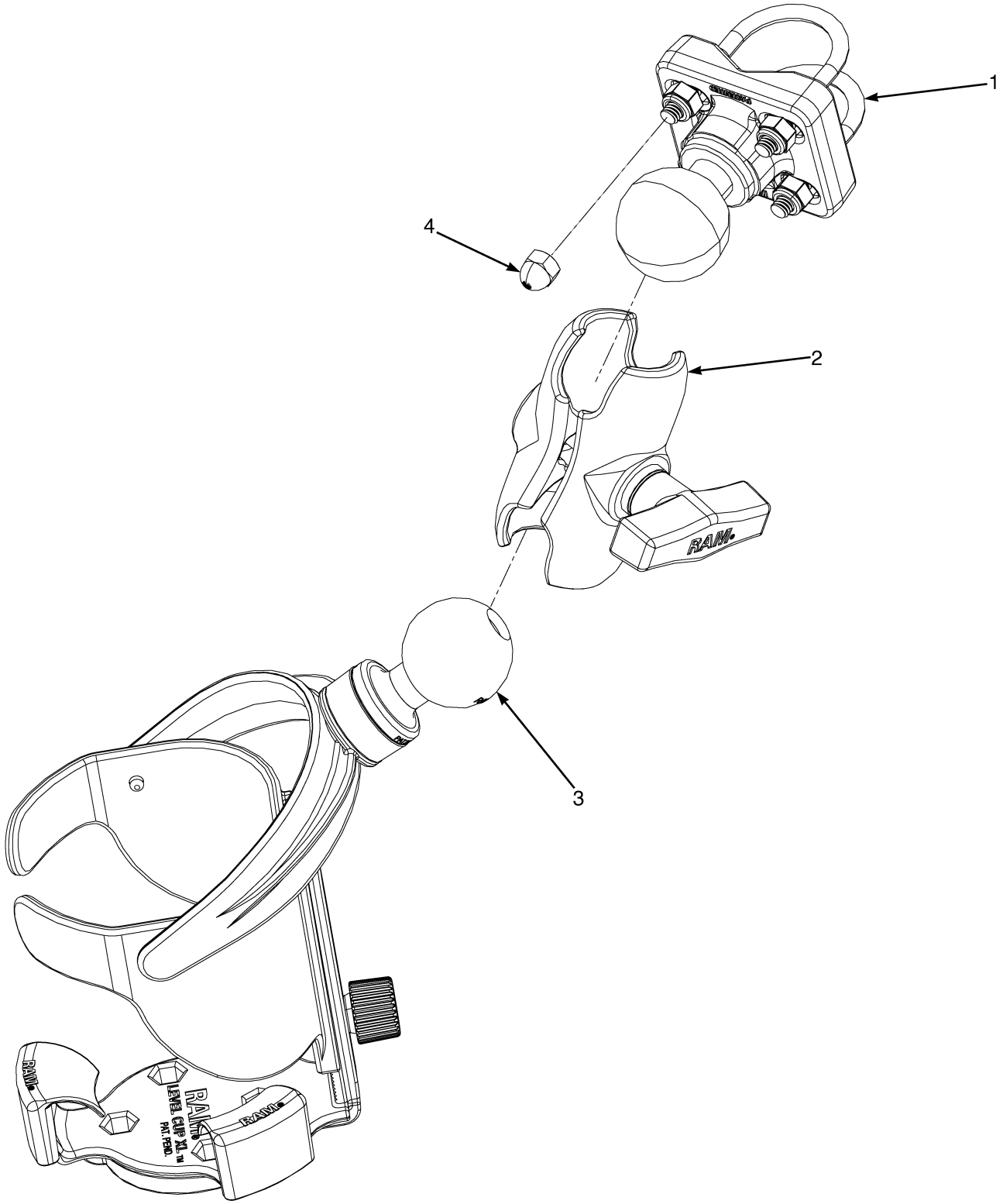

BP001400

ITEM	PART NO.	DESCRIPTION	QTY
1	4709270	Mount , Ball Base	1
2	4709264	Mount , Clamp (Ball Joint)	1
3	4709268	Mount , Cup Holder w/ mount ball	1
4	4318650	Nut (Cap)	4

©2026 HYSTER COMPANY

ACCESSORY BAR OPTION (FIGURE 22-9)

FIXED BAR — PHONE HOLDER

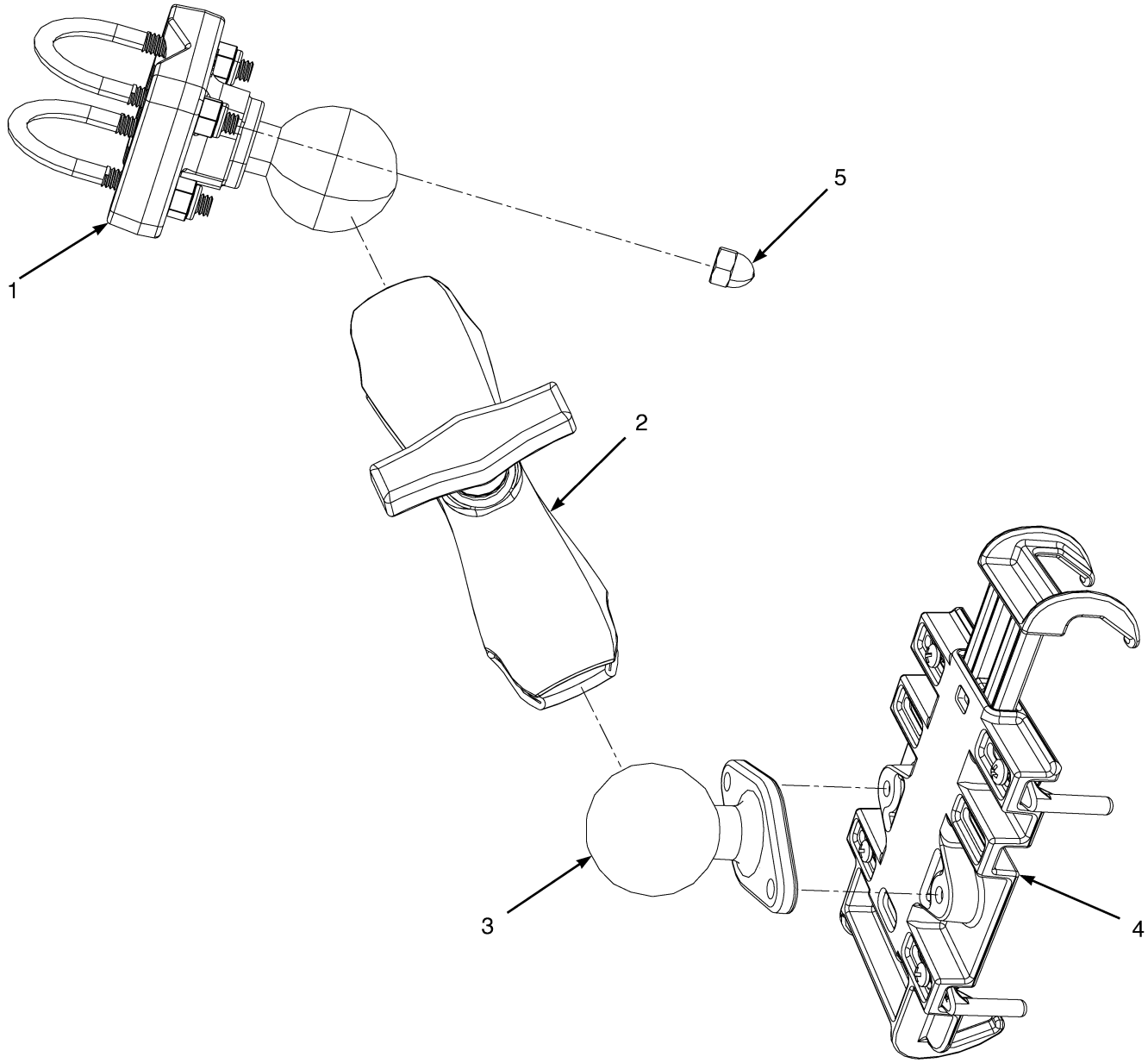

BP001401

ITEM	PART NO.	DESCRIPTION	QTY
1	4709270	Mount , Ball Base	1
2	4709269	Mount , Clamp (Ball Joint)	1
3	4709271	Mount , Ball Socket	1
4	4709272	Mount , Phone Holder (Adjustable to max phone size 3.6" x 7.5")	1
5	4318650	Nut (Cap)	4

©2026 HYSTER COMPANY

ACCESSORY BAR OPTION (FIGURE 22-10)

FIXED BAR — TAPE ROLL HOLDER

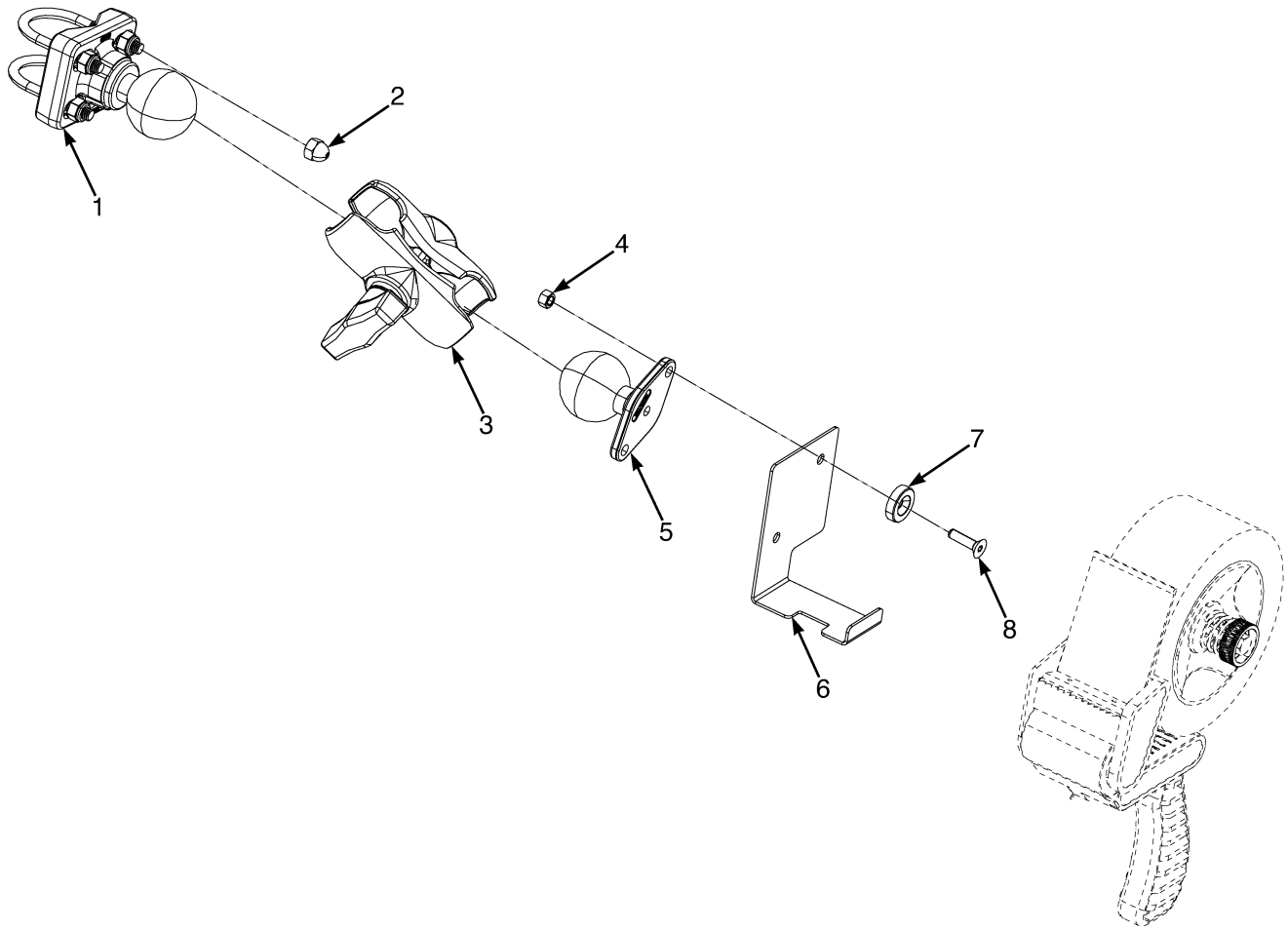

BP001329

ITEM	PART NO.	DESCRIPTION	QTY
1	4709270	Mount , Ball Base	1
2	4318650	Nut (Cap)	4
3	4709264	Mount , Clamp (Ball Joint)	1
4	316825	Nut	2
5	4709271	Mount , Ball Socket	1
6	4279626	Plate - Tape Roller	1
7	4279627	Magnet	2
8	296205	Screw	2

©2026 HYSTER COMPANY

ACCESSORY BAR OPTION (FIGURE 22-11)

SWING OUT BAR — MONITOR AND SCANNER AND STRETCH WRAP

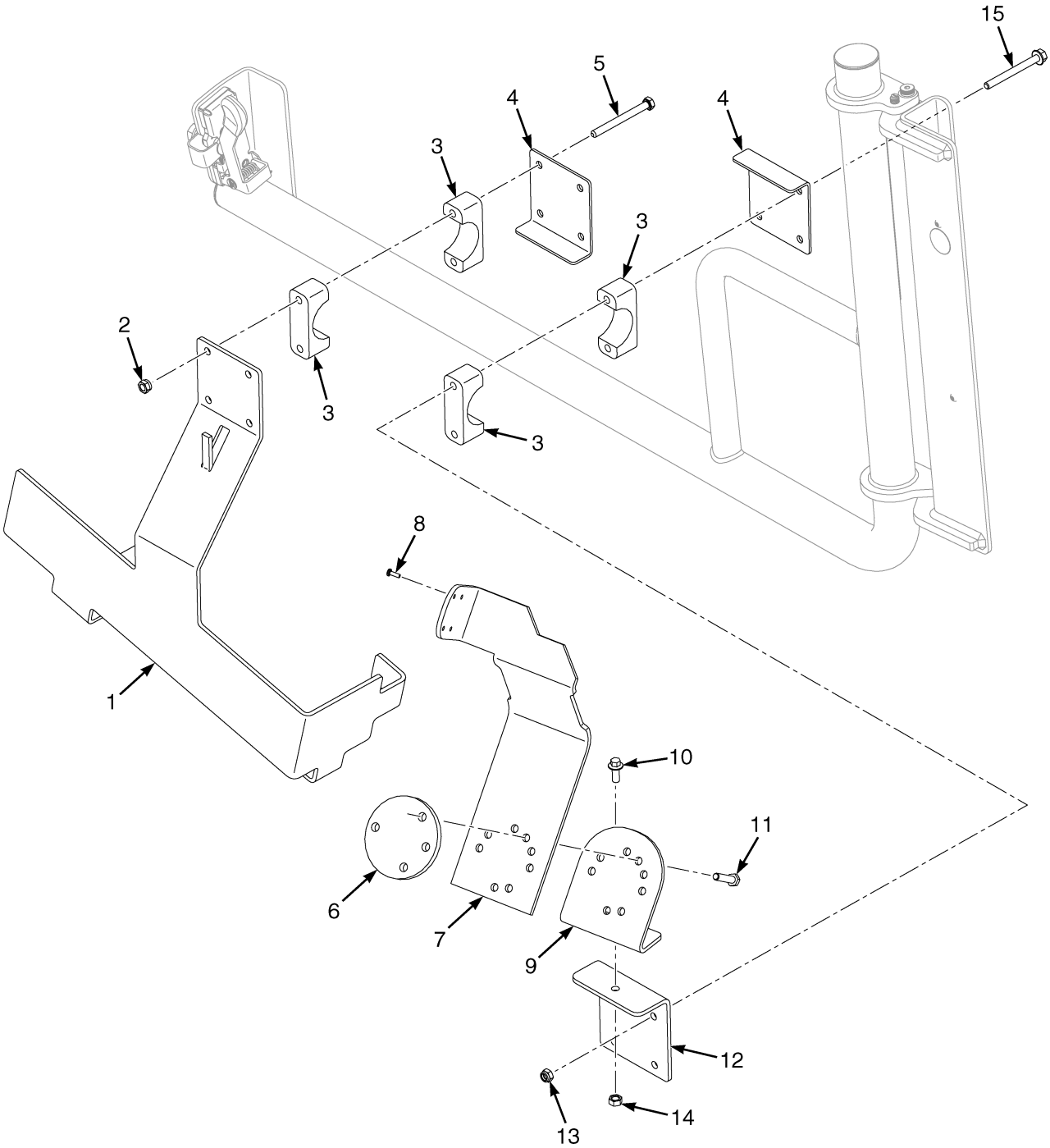

ITEM	PART NO.	DESCRIPTION	QTY
1	4328674	Arm , Shrink	1
2	1581566	Nut	4
2	1581565	Nut (Alternate Part)	4
3	4149479	Isolator	8
4	4149480	Plate (Isolator)	2
5	287750	Capscrew	4
5	389129	Capscrew (Alternate Part)	4
6	4149510	Spacer	1
7	4149476	Bracket (Scanner)	1
8	302021	Screw	4
9	4149477	Bracket (Door Mount)	1
10	1527880	Capscrew	1
11	4151323	Capscrew	3
12	4149478	Bracket , Isolator swivel	1
13	1581739	Nut	4
14	292654	Nut	1
15	4185433	Capscrew	4

©2026 HYSTER COMPANY

ACCUMULATOR (FIGURE 22-12)

HOIST

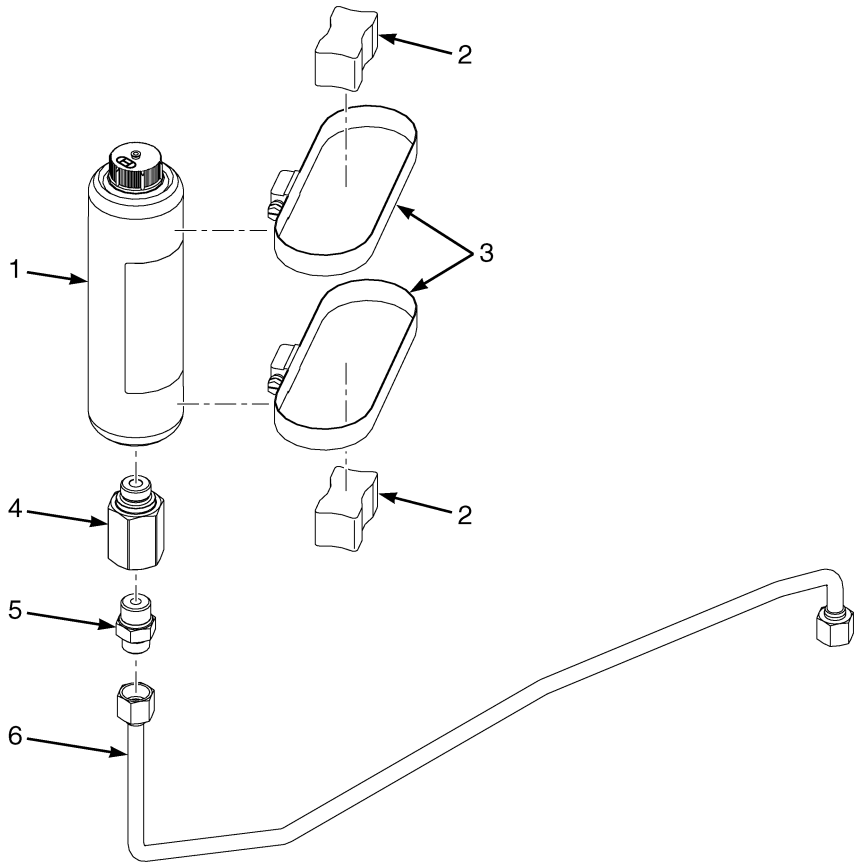

ITEM	PART NO.	DESCRIPTION	QTY
1	4700339	Accumulator	1
2	1609864	Spacer	2
3	4031653	Strap Clamp	2
3	1611564	Clamp , Heavy Duty Strap Clamp (Alternate Part)	2
3	4341994	Strap Clamp (Alternate Part)	2
4	4289369	Fitting - Pressure Compensated Flow Control	1
5	1486742	Fitting	1
6	4684709	Tube Assy	1
6	4718063	Tube Assy (Alternate Part)	1

BELLY SCREEN (FIGURE 22-13)

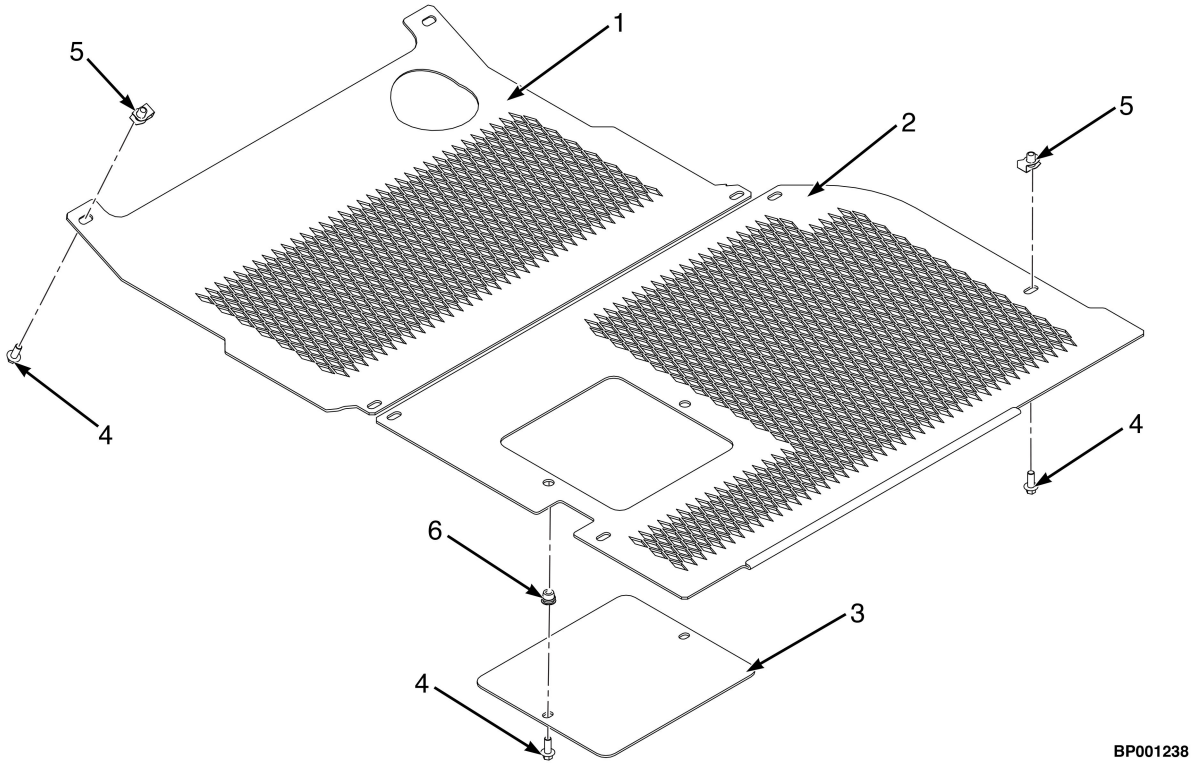

ITEM	PART NO.	DESCRIPTION	QTY
1	4279632	Shield - Lower body debris, front - Diesel (Diesel and LPG)	1
2	4223773	Shield - Lower body debris - Diesel	1
2	4236829	Shield - Lower body debris - LPG/Bi Fuel	1
3	4279635	Cover Plate (Engine Oil Filter)	1
4	1527880	Capscrew	6
5	1398062	Nut (Fold Over)	4
6	1531557	Insert	2

©2026 HYSTER COMPANY

BLOCK HEATER (FIGURE 22-14)

120V — YANMAR 2.2L

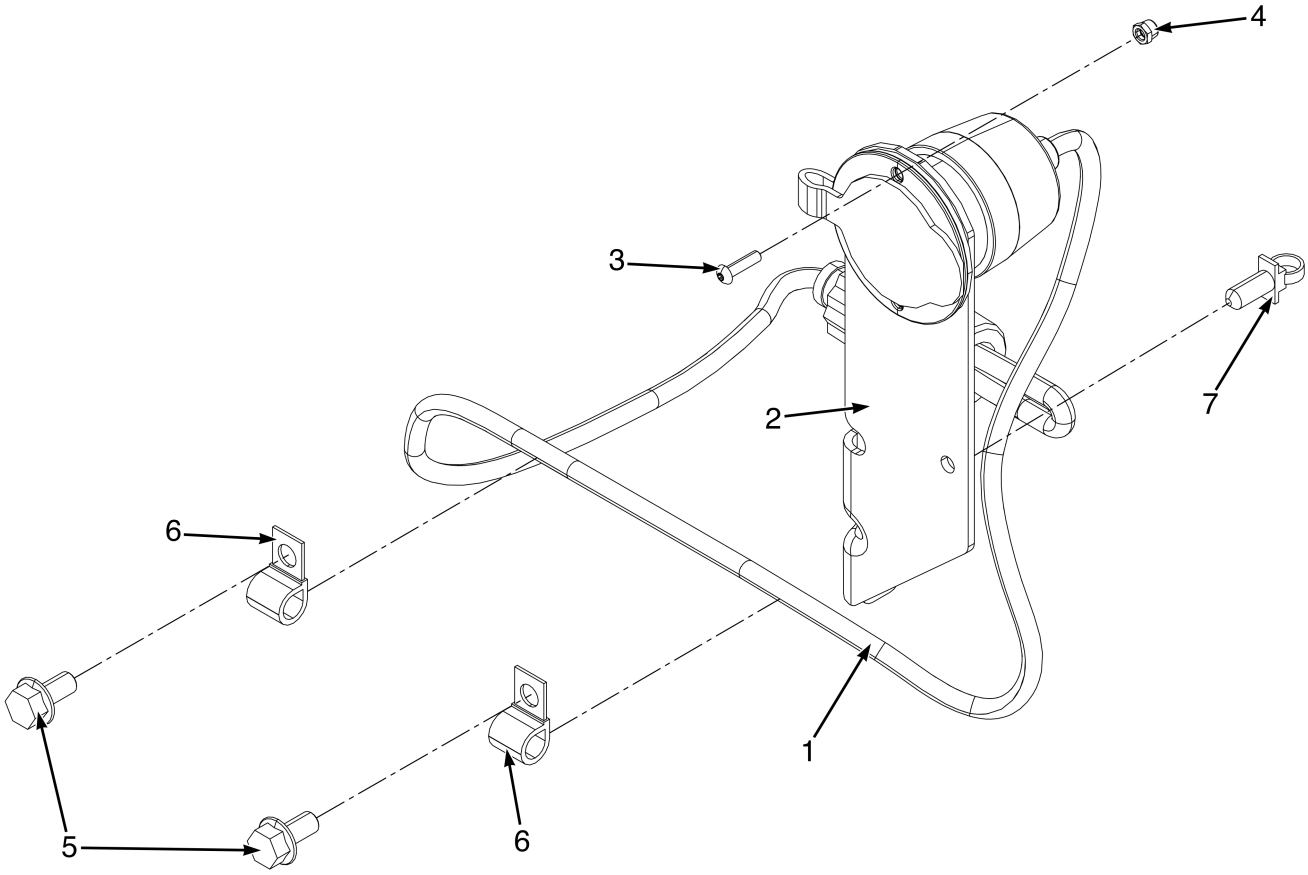

BP001362

ITEM	PART NO.	DESCRIPTION	QTY
1	4701868	Engine Heater (120 Volt)	1
2	4292677	Bracket - Block Heater	1
3	4216685	Screw	2
4	4028318	Locknut	2
5	~~4109993~~		
	1527879	Capscrew	2
6	132131	Clamp	2
7	4140361	Cable Clip	1

BLOCK HEATER (FIGURE 22-15)

120V — YANMAR 3.0L AND 3.3L

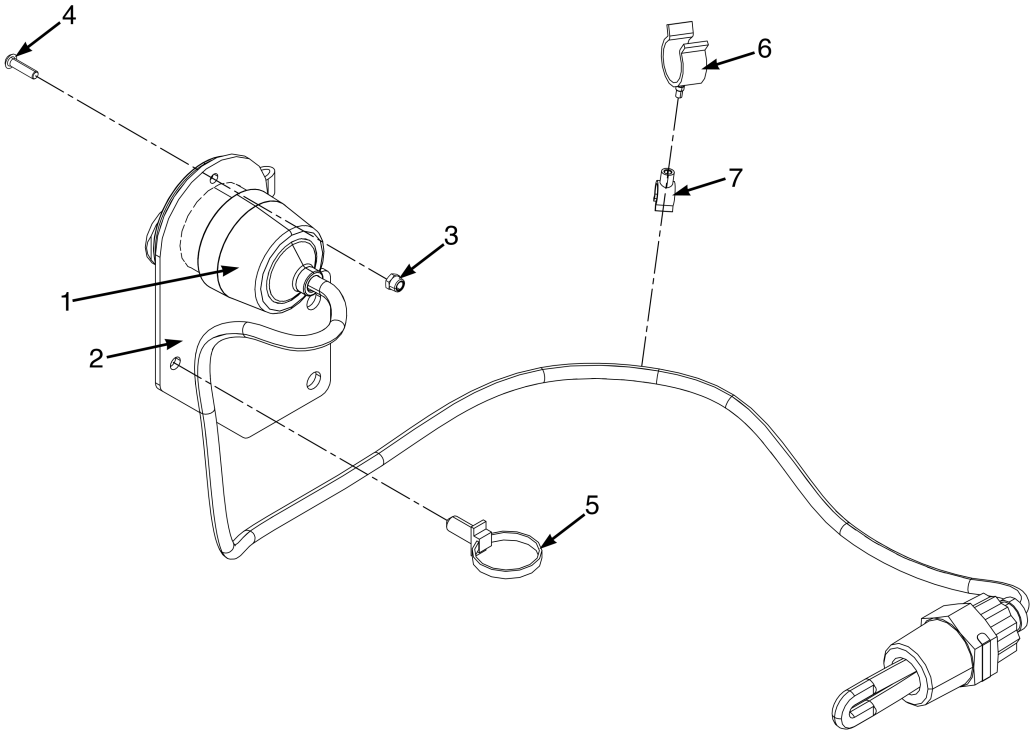

BP001471

ITEM	PART NO.	DESCRIPTION	QTY
1	4701868	Engine Heater (120 Volt)	1
2	4292675	Bracket	1
3	4028318	Locknut	2
4	4216685	Screw	2
5	4140361	Cable Clip	1
6	1502066	Clamp (Swivel)	3
7	4154199	Clamp (Swivel)	3

See Service Manual for service procedures.
©2026 HYSTER COMPANY

CONVENIENCE TRAY (FIGURE 22-16)

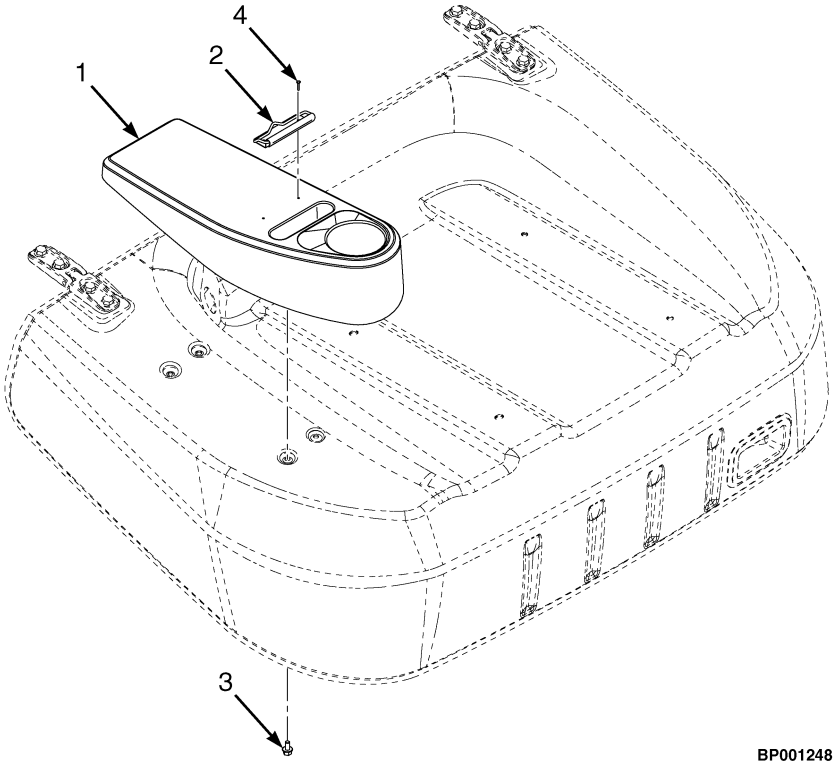

ITEM	PART NO.	DESCRIPTION	QTY
1	4685021	Tray - w/ cup holder	1
2	4264924	Spring - Clip	1
2	4325431	Spring , Clip (Alternate Part)	1
3	1534417	Capscrew	4
4	4694068	Screw	2

CONVENIENCE TRAY (FIGURE 22-17)

TYPE S

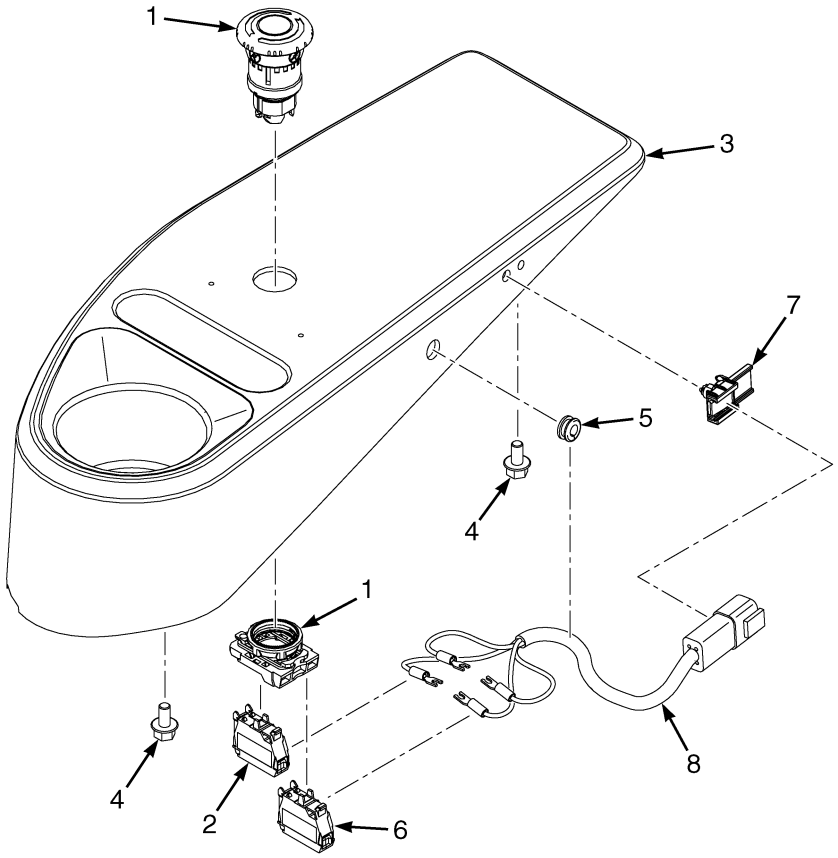

ITEM	PART NO.	DESCRIPTION	QTY
1	2107320	Push Button Switch (Emergency Disconnect)	1
2	4180406	Block Push Button Contact	1
3	4705560	Tray - Convenience, Type S	1
4	1534417	Capscrew	4
5	1626984	Grommet	1
6	4302376	Block - Push Button Contact	1
7	4637825	Clip	1
8	4703650	Wire Harness - Aux Type S Disconnect	1
8	1374705	E-Spade	4
8	1489655	Connector (4 Way)	1
8	1330416	Connector (Secondary Lock)	1
8	1330437	Terminal (Pin)	4

©2026 HYSTER COMPANY

DUAL MIRRORS (FIGURE 22-18)
RECTANGLE OHG

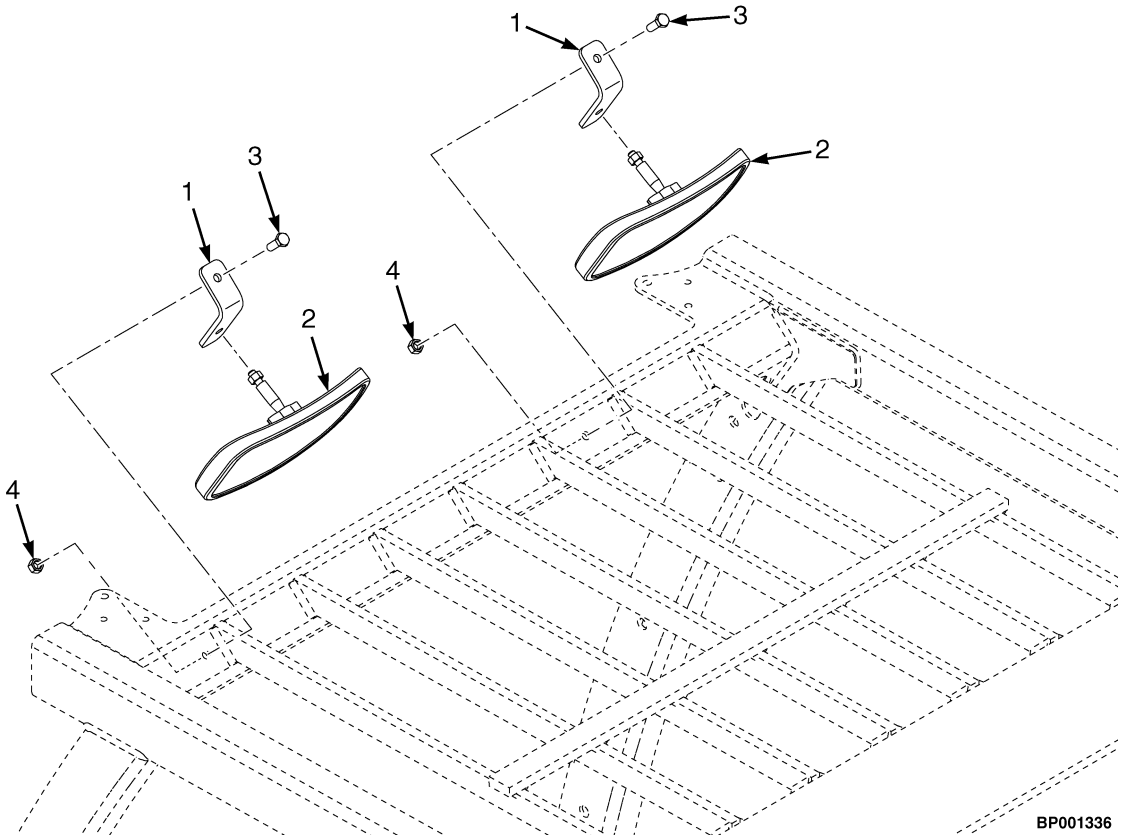

ITEM	PART NO.	DESCRIPTION	QTY
1	4285018	Plate - Mirror Mount	2
1	4376735	Plate (Alternate Part)	2
2	4610037	Mirror	2
3	136749	Screw	2
4	2022719	Nut	2

FAN (FIGURE 22-19)
MOUNTED (→ 6/2022)

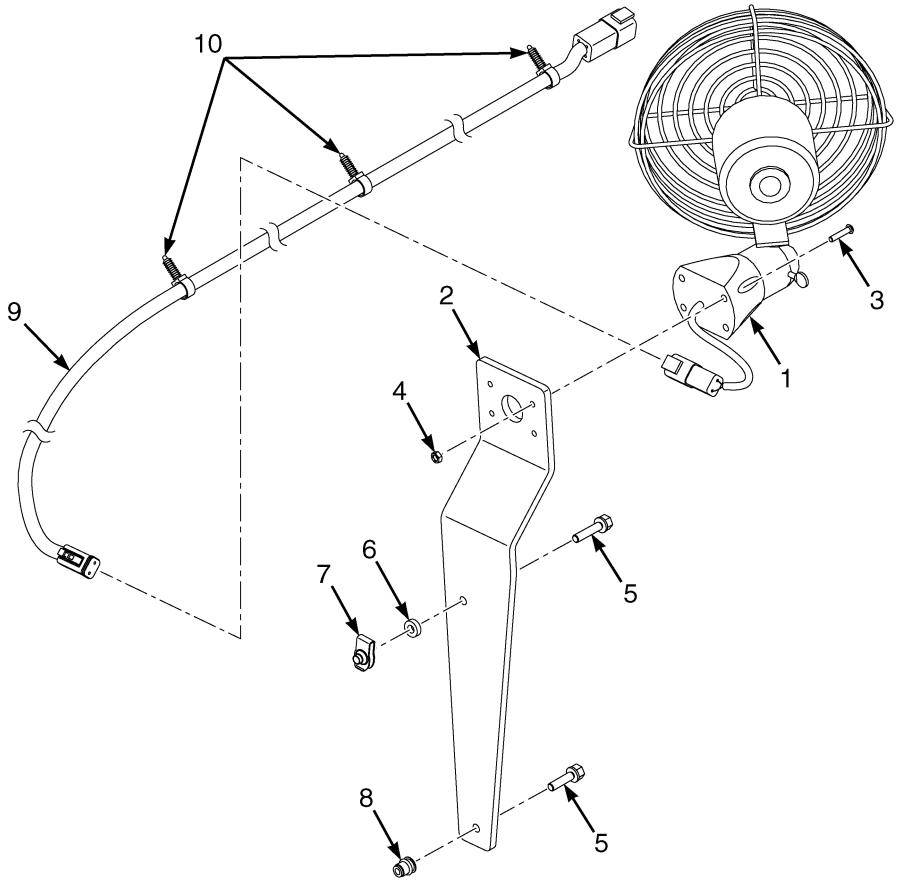

KEY:
A: Standard
B: Cab

ITEM	PART NO.	DESCRIPTION	QTY A	QTY B
1	1359562	Fan Assembly	1	1
2	4276166	Bracket - Fan Mounting	1	1
3	4021996	Screw	4	4
4	1463912	Nut	4	4
5	4309801	Screw	2	2
6	4272698	Spacer	..	2
7	1566420	Nut (Foldover)	..	2
8	1531558	Insert	2	..
9	. . . . .	Wire Harness - Cab (☞Figure 11-19)	..	1
9	4697606	Wire Harness - Fan, No Cab	1	..
10	1509888	Clip (Conduit)	3	..

©2026 HYSTER COMPANY

FAN (FIGURE 22-20)

MOUNTED — NON CAB (6/2022 →)

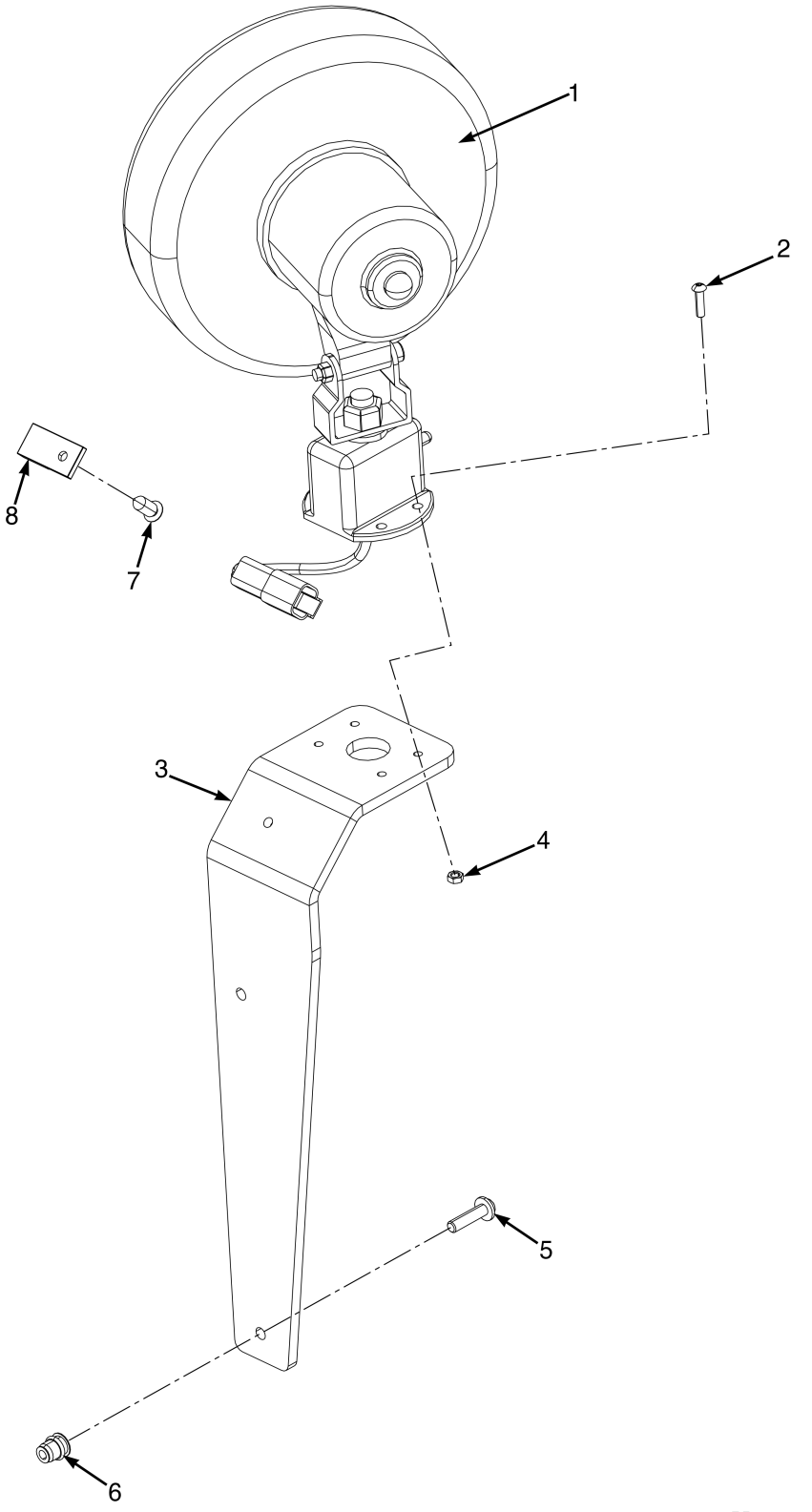

ITEM	PART NO.	DESCRIPTION	QTY
1	4722467	Fan (Assembly), 12v	1
1	4722466	Fan (12V)	1
2	4209005	Screw	4
3	4338439	Bracket - Fan Mounting	1
4	1463912	Nut	4
5	4309801	Screw	2
6	1531558	Insert	2
7	1582464	Fastener	1
8	1500912	Clip	1

©2026 HYSTER COMPANY

FAN (FIGURE 22-21)

MOUNTED — CAB (6/2022 →)

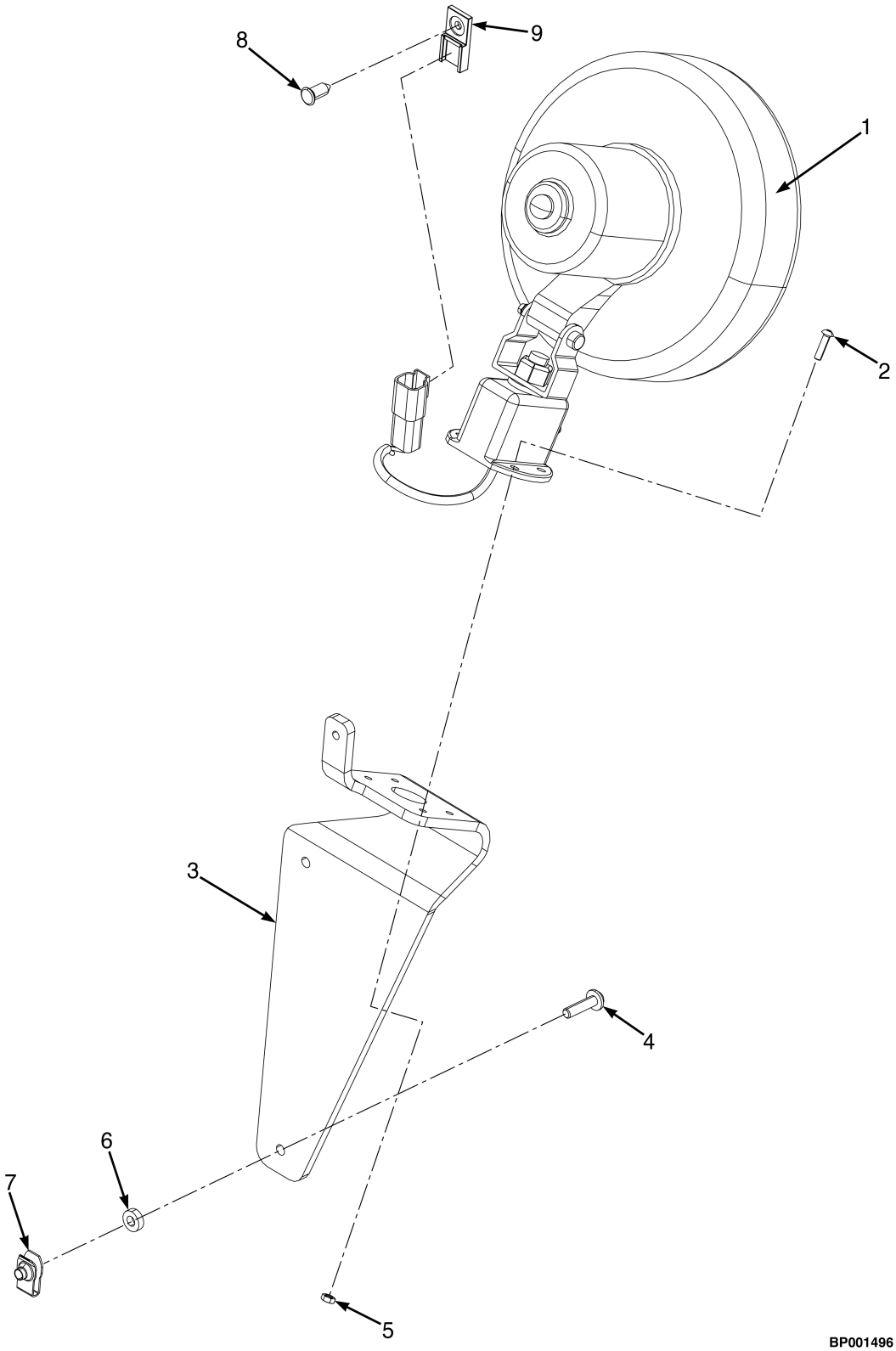

ITEM	PART NO.	DESCRIPTION	QTY

ITEM	PART NO.	DESCRIPTION	QTY
1	4722467	Fan (Assembly), 12v	1
1	4722466	Fan (12V)	1
2	4209005	Screw	4
3	4338440	Bracket - Fan Mounting with Cab	1
3	81065999	Bracket - Fan Mounting with Cab (Alternate Part)	1
4	4309801	Screw	2
5	1463912	Nut	4
6	4272698	Spacer	2
7	1566420	Nut (Foldover)	2
8	1582464	Fastener	1
9	1500912	Clip	1

See Service Manual for service procedures.
©2026 HYSTER COMPANY

FIRE EXTINGUISHER (FIGURE 22-22)

WITHOUT CAB (→ 5/2022)

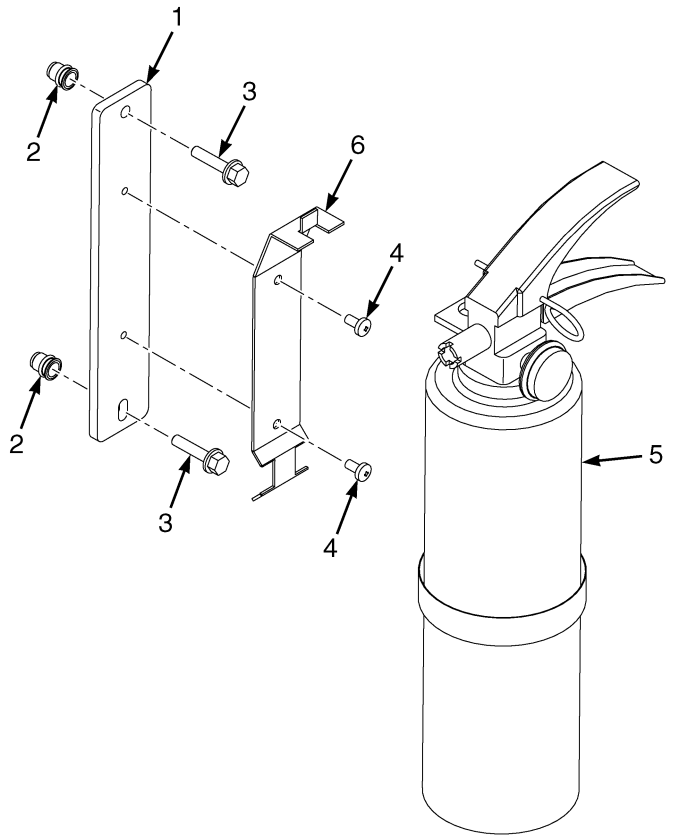

BP001243

ITEM	PART NO.	DESCRIPTION	QTY
1	1623155	Bracket	1
2	1531558	Insert	2
3	4309801	Screw	2
4	4252056	Screw	2
5	146540	Fire Extinguisher	1
6	1561749	Bracket	1

FIRE EXTINGUISHER (FIGURE 22-23)

FIGURE 8 W/ CAB (→ 5/2022)

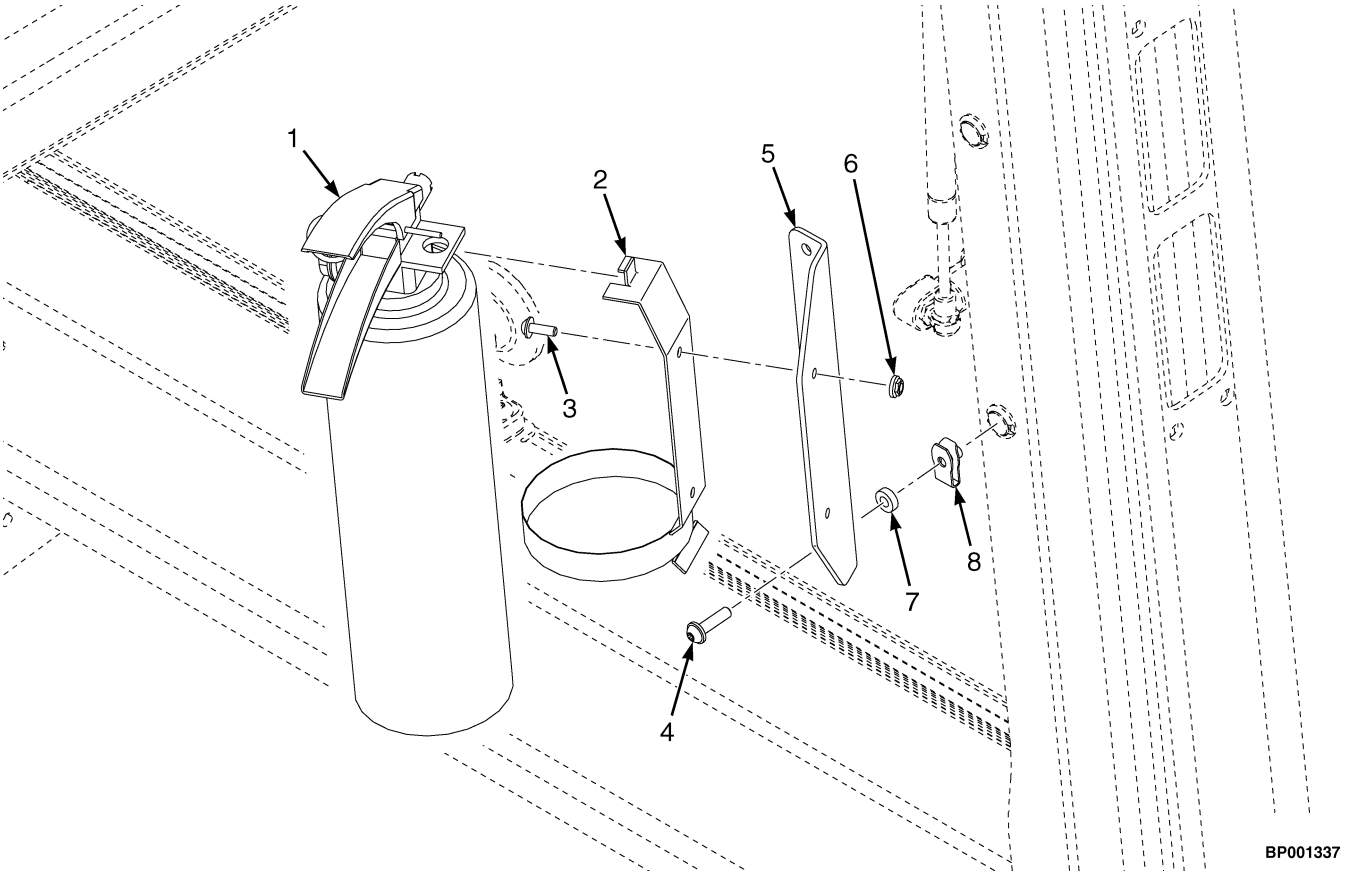

ITEM	PART NO.	DESCRIPTION	QTY
1	146540	Fire Extinguisher	1
2	1561749	Bracket	1
3	4309802	Screw	2
4	4309801	Screw	2
5	4270989	Bracket - Fire Extinguisher	1
6	4309806	Nut	2
7	4272698	Spacer	2
8	1566420	Nut (Foldover)	2

©2026 HYSTER COMPANY

FIRE EXTINGUISHER (FIGURE 22-24)

COWL MOUNTED — WITH OAS (5/2022 →)

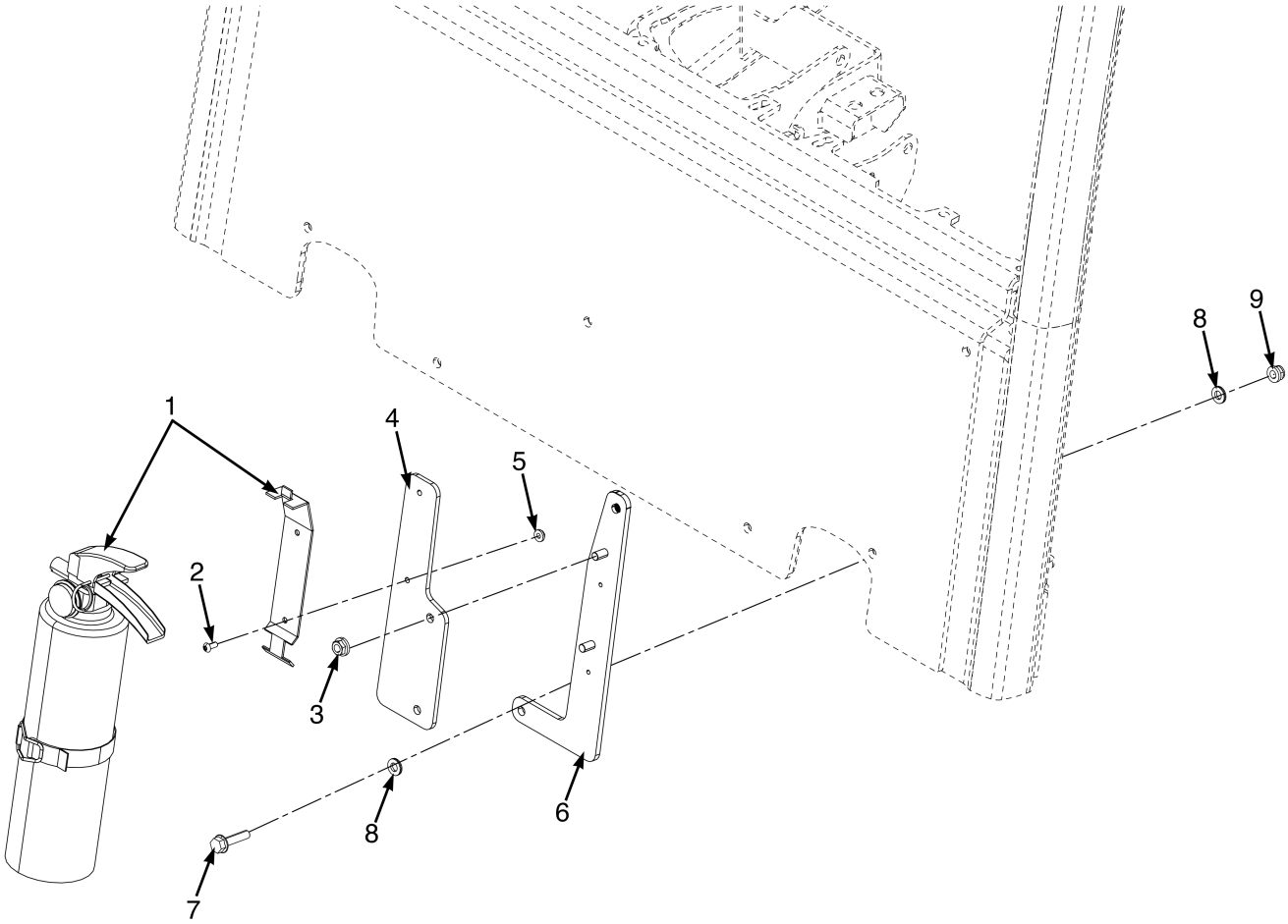

BP001475

ITEM	PART NO.	DESCRIPTION	QTY
1	146540	Fire Extinguisher	1
2	4216687	Screw	2
3	4309808	Nut	2
4	4721923	Mounting Plate	1
5	4309806	Nut	2
6	4722214	Bracket	1
7	4349483	Capscrew	2
8	4309813	Lockwasher	4
9	4195768	Locknut	2

FIRE EXTINGUISHER (FIGURE 22-25)

COWL MOUNTED — WITHOUT OAS (5/2022 →)

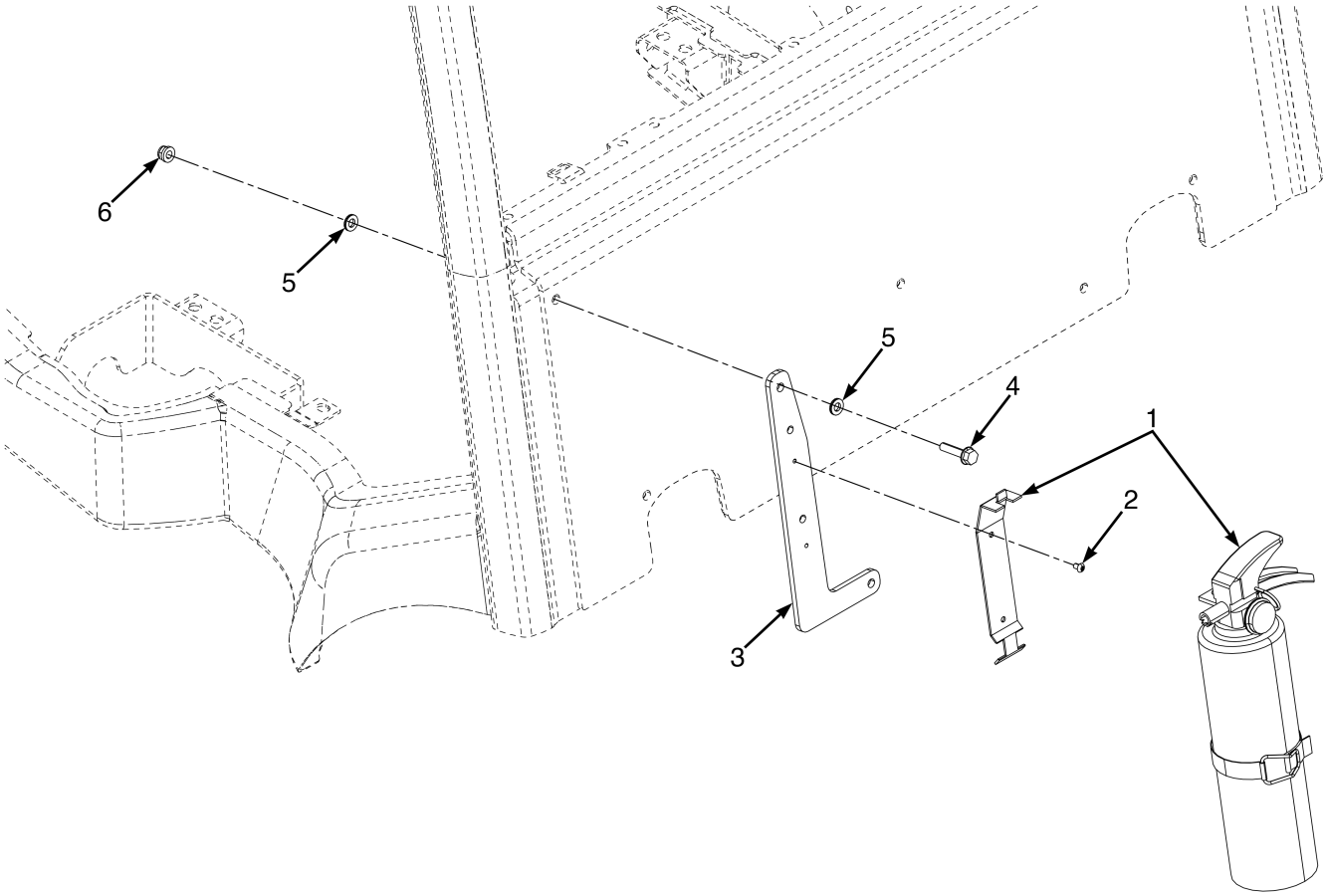

BP001476

ITEM	PART NO.	DESCRIPTION	QTY
1	146540	Fire Extinguisher	1
2	4252056	Screw	2
3	4729711	Mounting Plate	1
4	4349483	Capscrew	2
5	4309813	Lockwasher	4
6	4195768	Locknut	2

©2026 HYSTER COMPANY

FIRE EXTINGUISHER (FIGURE 22-26)
MANUFACTURING OPTION

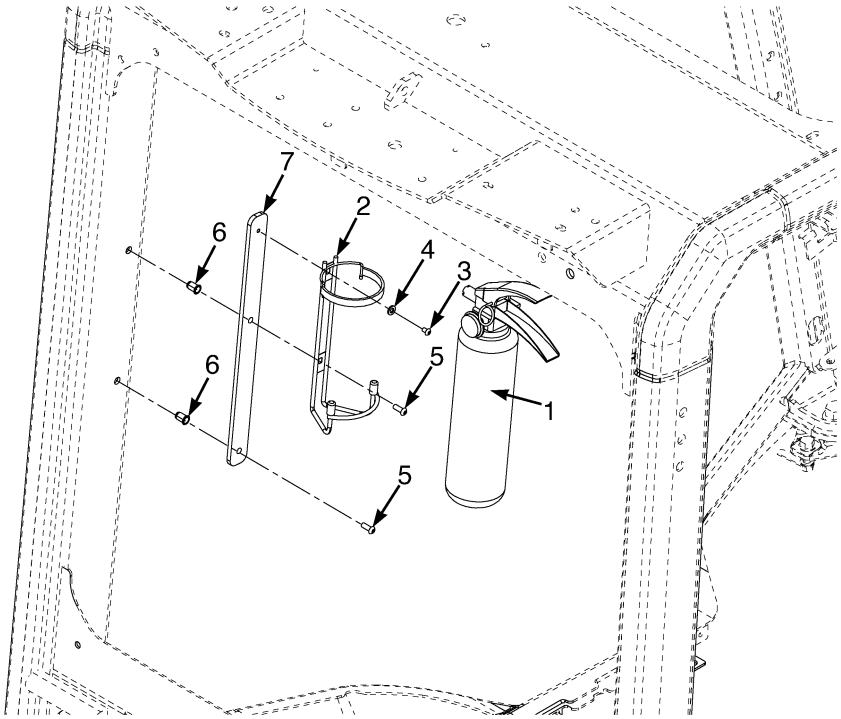

BP001744

ITEM	PART NO.	DESCRIPTION	QTY
1	4136632	Fire Extinguisher	1
1	4136631	Fire Extinguisher	1
2	4136630	Bracket	1
3	4252056	Screw	1
4	1506738	Washer	1
5	4196031	Screw	2
6	1531558	Insert	2
7	. . . . .	Mounting Plate	1

©2026 HYSTER COMPANY

FORK LASER (FIGURE 22-27)

3FFL AND 2LFL

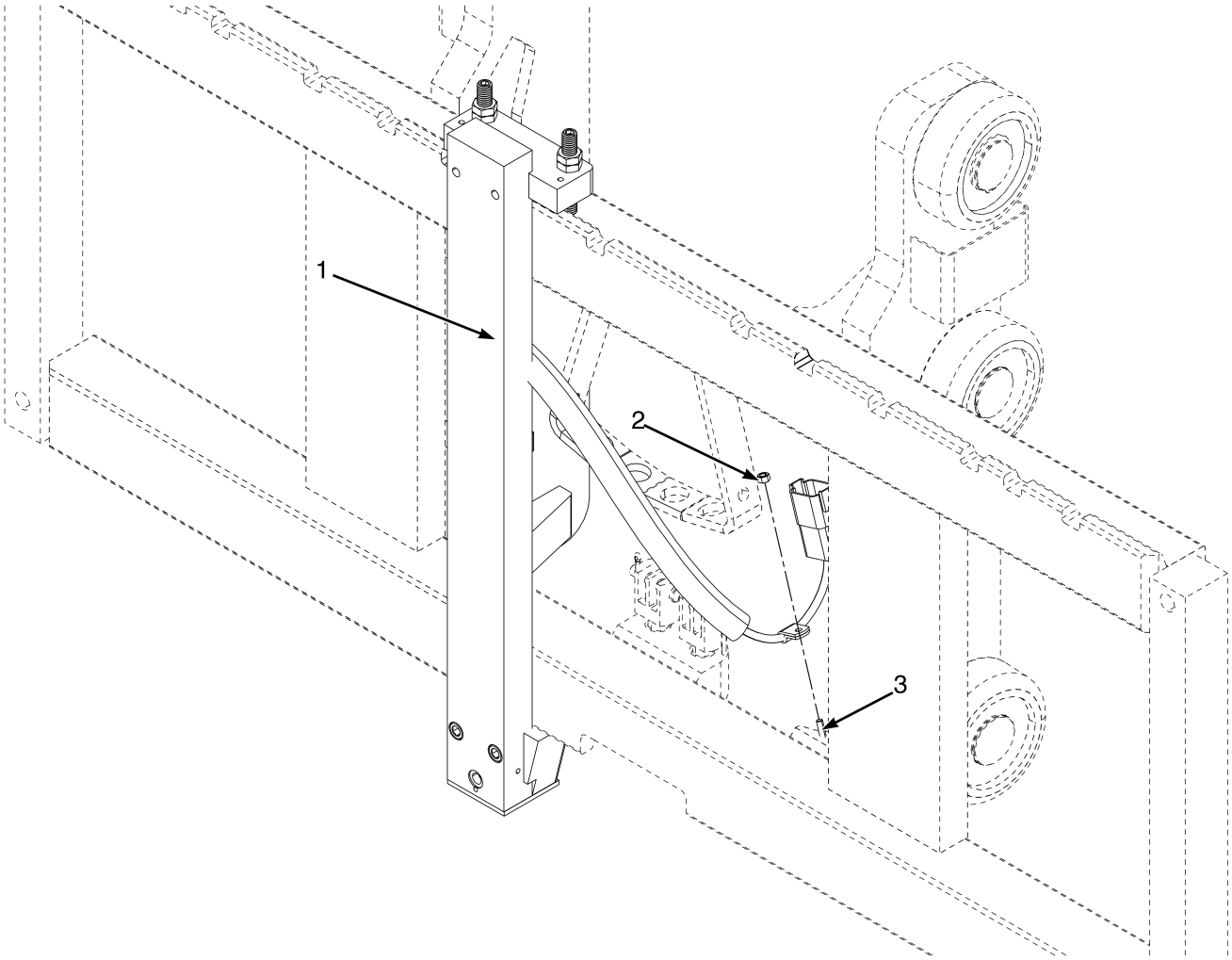

BP001468

ITEM	PART NO.	DESCRIPTION	QTY
1	4715321	Laser Assy - Red, Class II 3FFL AND 2LFL	1
1	4715361	Laser Assy - Red, Class III	1
2	4216685	Screw	1
3	4258696	Nut	1

See Service Manual for service procedures.
©2026 HYSTER COMPANY

NOTES

LPG TANK BRACKET (FIGURE 22-28)

INTERLOCK SENSOR

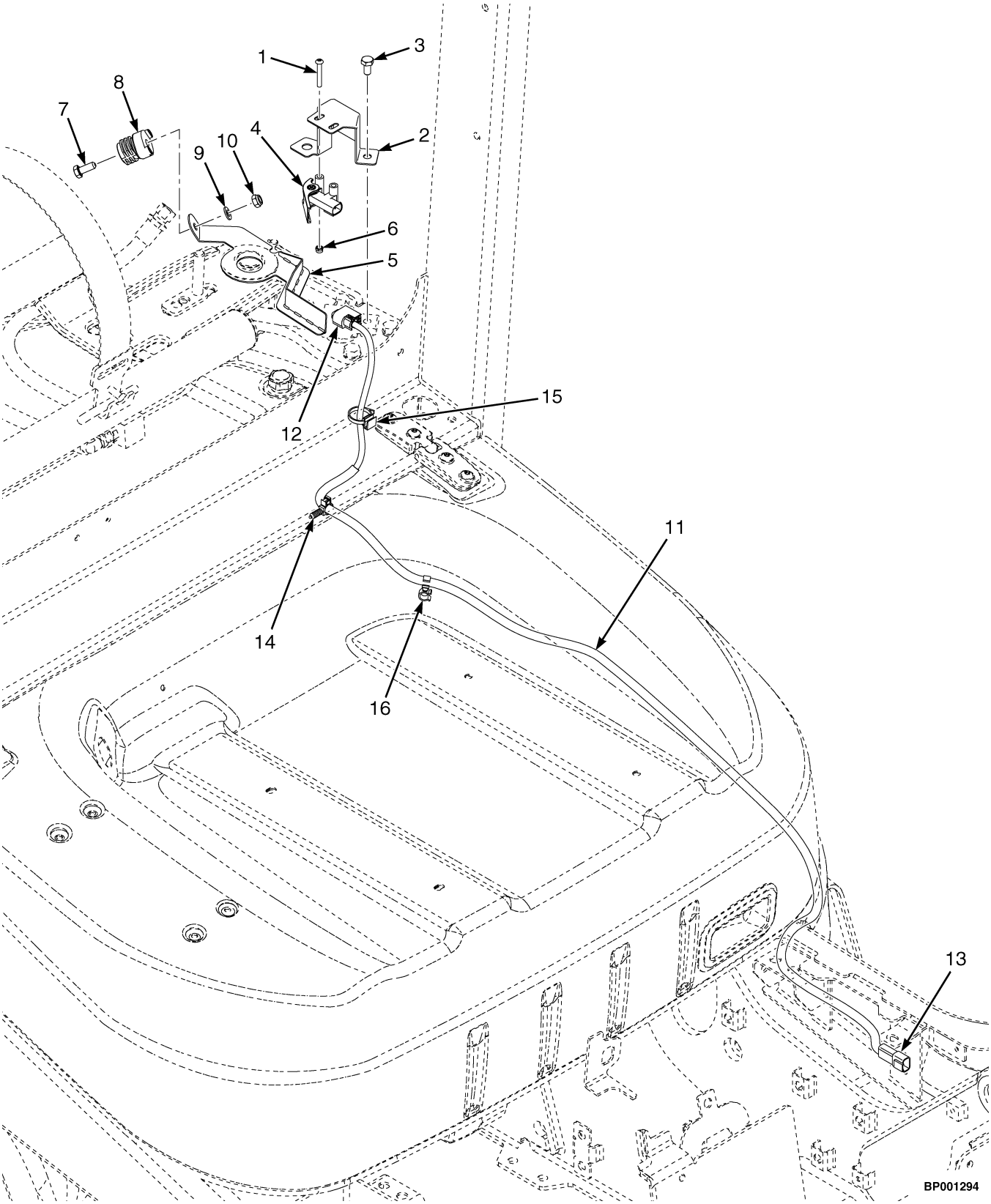

©2026 HYSTER COMPANY

LPG TANK BRACKET
INTERLOCK SENSOR

KEY:
A: Swing Out w/ Plug
B: Swing Out w/o Plug
C: Drop Down w/ Plug
D: Drop Down w/o Plug

ITEM	PART NO.	DESCRIPTION	QTY A	QTY B	QTY C	QTY D
1	1701768	Screw	2	2	2	2
2	4276948	Bracket	1	1	1	1
3	1581579	Capscrew	2	2	2	2
4	1683486	Sensor (Brake Position)	1	1	1	1
5	4277162	Bracket Wldmt	1	..	..	..
5	4276950	Bracket Wldmt	..	1	..	..
5	4277163	Bracket	..	..	1	..
6	316833	Nut	2	2	2	2
7	1581580	Capscrew	1	..	1	..
8	4139859	Plug	1	..	1	..
9	~~4166624~~					
	1581556	Washer	1	..	1	..
10	1581739	Nut	1	..	1	..
11	4695470	Wire Harness - LPG Bracket Interlock	1	1	1	1
12	. . . . .	Connector Assembly (CPS27) To Interlock Sensor	1	1	1	1
12	1700460	Connector	1	1	1	1
12	1700461	Terminal	3	3	3	3
13	. . . . .	Connector Assembly (CRP582) To Chassis	1	1	1	1
13	~~4257399~~					
	1463180	Connector (DTM REC 3-Pin)	1	1	1	1
13	~~4257401~~					
	1463191	Connector (Secondary Lock)	1	1	1	1
13	1463138	Terminal (Pin)	3	3	3	3
14	1509888	Clip (Conduit)	1	1	1	1
15	4276772	Retainer	1	1	1	1
16	1573549	Clamp (Swivel)	1	1	1	1

©2026 HYSTER COMPANY

LPG TANK BRACKET (FIGURE 22-29)

INTERLOCK SENSOR — ALTERNATE CONFIGURATION

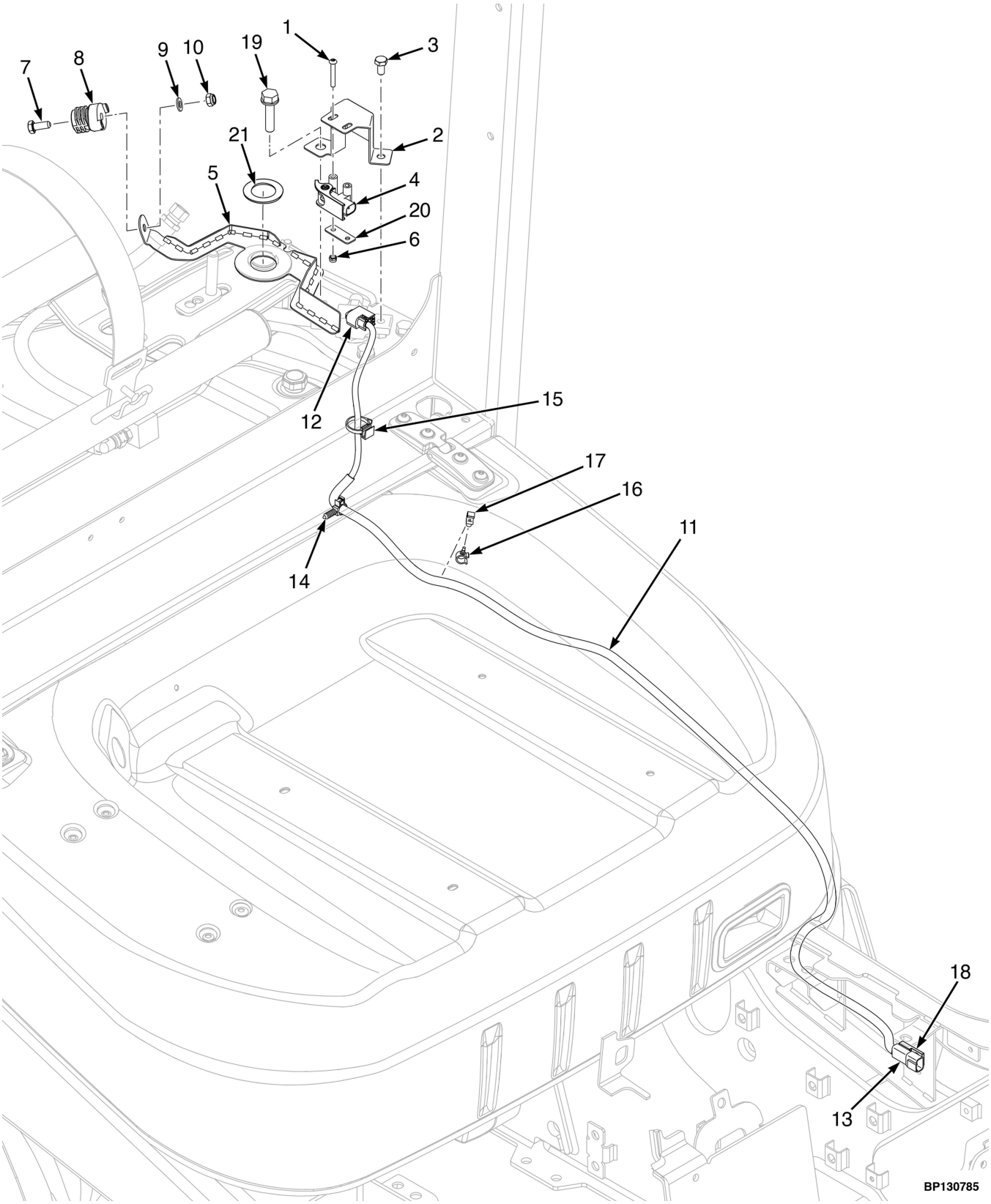

©2026 HYSTER COMPANY

LPG TANK BRACKET

INTERLOCK SENSOR – ALTERNATE CONFIGURATION

KEY:
A: Swing Out w/ Plug
B: Swing Out w/o Plug
C: Drop Down w/ Plug
D: Drop Down w/o Plug

ITEM	PART NO.	DESCRIPTION	QTY A	QTY B	QTY C	QTY D
1	1701768	Screw	2	2	2	2
2	4276948	Bracket	1	1	1	1
3	1581579	Capscrew	1	1	1	1
4	1683486	Sensor (Brake Position)	1	1	1	1
5	4323994	Bracket Wldmt	1	..	..	..
5	4276950	Bracket Wldmt	..	1	..	..
5	4324396	Bracket Wldmt	..	..	1	..
6	316833	Nut	2	2	2	2
7	1581580	Capscrew	1	..	1	..
8	4139859	Plug	1	..	1	..
9	~~4166624~~					
	1581556	Washer	1	..	1	..
10	1581739	Nut	1	..	1	..
11	4695470	Wire Harness - LPG Bracket Interlock	1	1	1	1
12	. . . . .	Connector Assembly (CPS27) To Interlock Sensor	1	1	1	1
12	1700460	Connector	1	1	1	1
12	1700461	Terminal	3	3	3	3
13	. . . . .	Connector Assembly (CRP582) To Chassis	1	1	1	1
13	~~4257399~~					
	1463180	Connector (DTM REC 3-Pin)	1	1	1	1
13	~~4257401~~					
	1463191	Connector (Secondary Lock)	1	1	1	1
13	1463138	Terminal (Pin)	3	3	3	3
14	1509888	Clip (Conduit)	1	1	1	1
15	4276772	Retainer	1	1	1	1
16	1573549	Clamp (Swivel)	1	1	1	1
17	1561871	Clamp (Swivel)	1	1	1	1
18	1500912	Clip	1	1	1	1
19	1581400	Capscrew	1	1	1	1
20	4336204	Spacer	1	1	1	1
21	142247	Shim	1	1	1	1

©2026 HYSTER COMPANY

OBJECT DETECTION SYSTEM (FIGURE 22-30)

PAGE 1 OF 5 — ARRANGEMENT

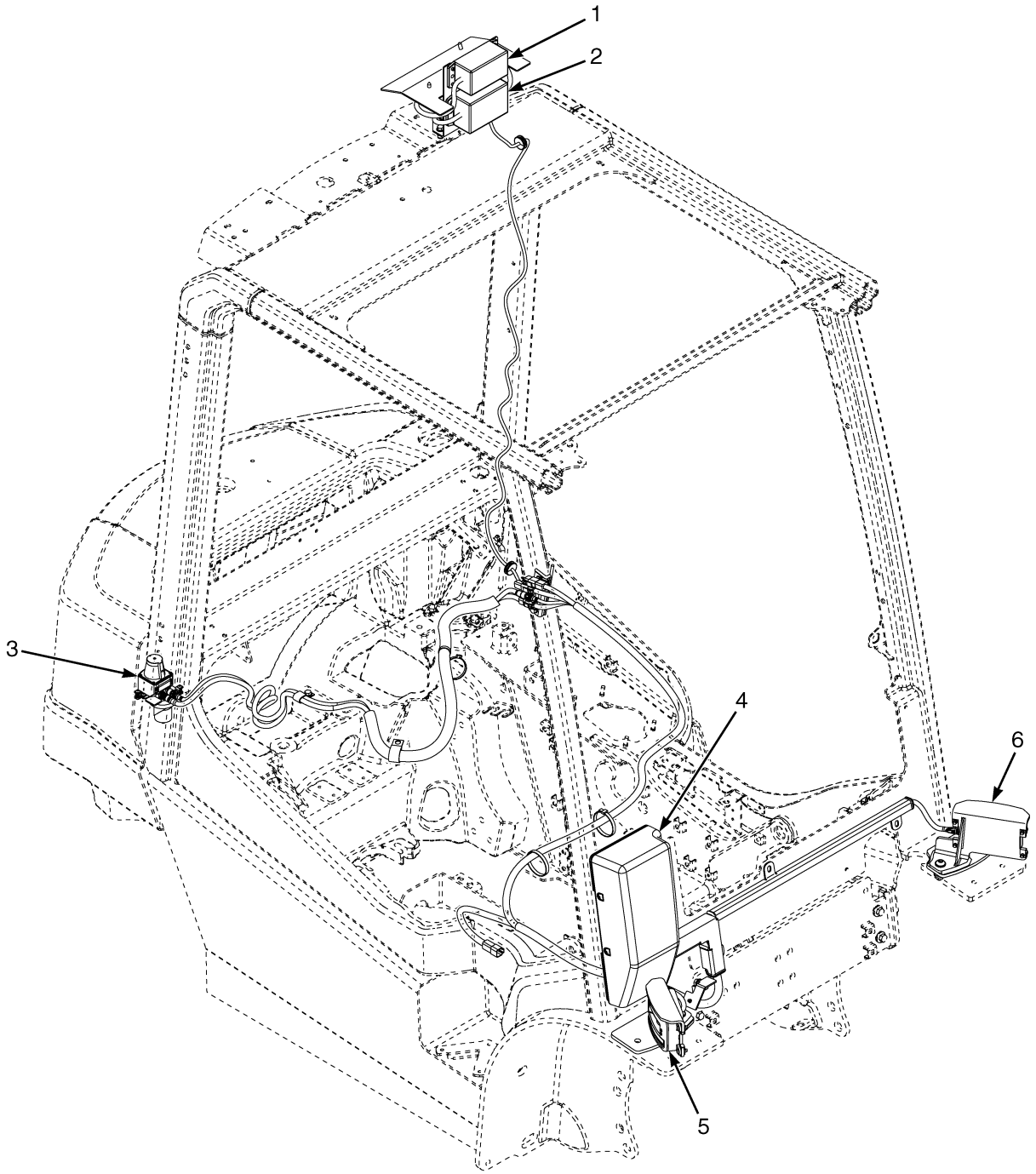

BP001330

©2026 HYSTER COMPANY

ITEM	PART NO.	DESCRIPTION	QTY
	. . . . .	Proximity Sensors (☞Figure 22-33)	1
1	4276349	Electronic Control Module - Collision Avoidance Unit	1
2	4284700	Electronic Control Module - CAN Bus Interface Unit	1
	. . . . .	Rear Sensor (☞Figure 22-34)	1
3	4276325	Sensor - LIDAR	1
	. . . . .	Controller	1
4	4276343	Electronic Control Module	1
	. . . . .	Side Sensors (☞Figure 22-32)	1
5	4304749	Sensor (RH)	1
6	4295715	Sensor (LH)	1

OBJECT DETECTION SYSTEM (FIGURE 22-31)

PAGE 2 OF 5 — CONTROLLER

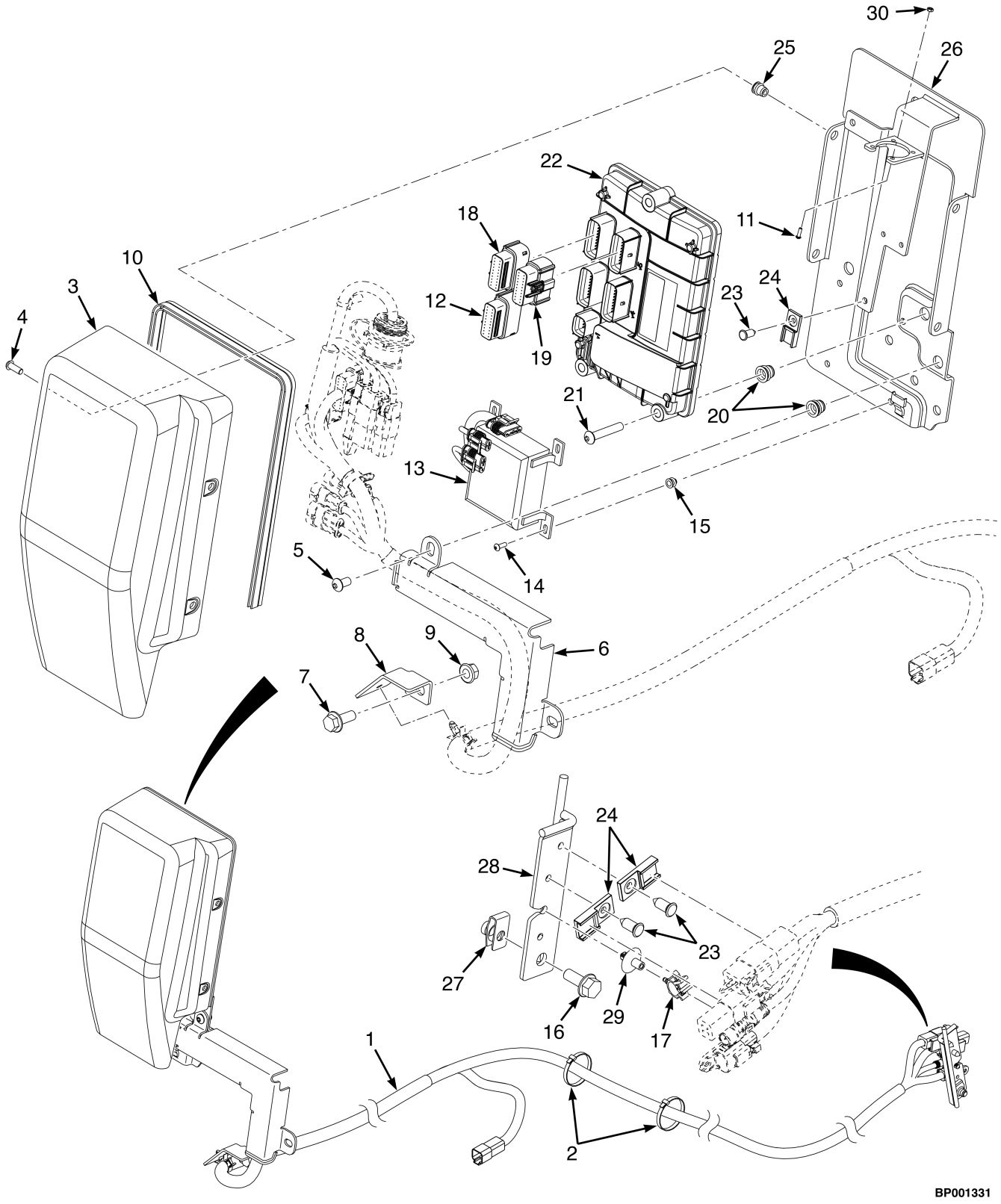

©2026 HYSTER COMPANY

OBJECT DETECTION SYSTEM

PAGE 2 OF 5 – CONTROLLER

ITEM	PART NO.	DESCRIPTION	QTY
1	4704017	Wire Harness - Object Detection All Options	1
1	4722373	Wire Harness - Object Detection All Options (Alternate Part)	1
1	4704018	Wire Harness - Object Detection Proximity Option	1
1	4722374	Wire Harness - Object Detection Proximity Option (Alternate Part)	1
1	4704019	Wire Harness - Object Detection Rear Option	1
1	4722375	Wire Harness - Object Detection Rear Option (Alternate Part)	1
2	129563	Strap Clamp	2
3	1510126	Screw (Button Head)	4
3	4196031	Screw (Alternate Part)	4
4	4305464	Cover	1
5	2061357	Capscrew	1
5	4111365	Screw (Alternate Part)	1
6	4305908	Bracket - Channel	1
7	1510117	Capscrew	1
8	4303291	Bracket	1
9	1460477	Nut	1
10	**c** 4299640	Trim Seal	1
10	**d**	Trim Seal	1
11	4244155	Screw	4
12	4699878	Connector	1
13	**b** 4276343	Electronic Control Module	1
14	**b** 1694830	Capscrew	4
15	**b** 1683346	Insert	4
16	1527880	Capscrew	1
17	**a** 4077618	Clamp (Adjustable)	1
18	4699877	Connector	1
19	4701077	Connector	1
20	1531557	Insert	4
21	1399398	Capscrew	3
21	4295980	Screw (Alternate Part)	3
22	4644754	Vehicle System Manager (Vsm)	1
23	1582464	Fastener	5
24	1500912	Clip	4
25	1531558	Insert	4
26	4299639	Bracket (Controller)	1
27	1480237	Nut (Foldover)	1
28	4307581	Bracket - Interconnection	1
29	**a** 1543842	Clamp (Base)	1
30	**d** 2074859	Nut	4

FOOTNOTES:

a Full and Proximity Option only
b Used with Rear Sensor
c → 5/2022
d 5/2022 →

OBJECT DETECTION SYSTEM (FIGURE 22-32)

PAGE 3 OF 5 — SIDE SENSORS

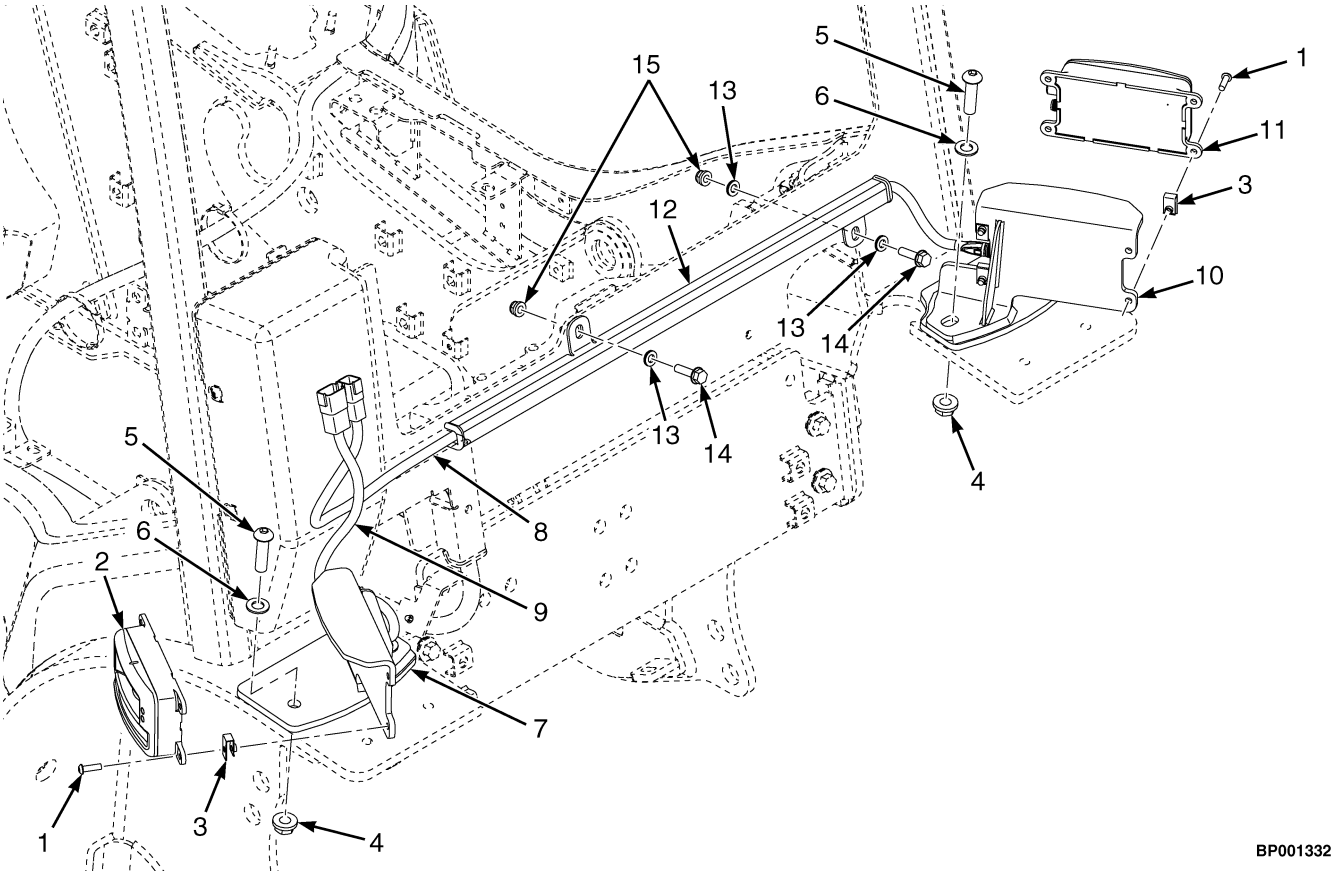

ITEM	PART NO.	DESCRIPTION	QTY
1	353144	Capscrew	8
2	4295715	Sensor (RH)	1
3	1350215	Nut (Foldover)	8
4	1586432	Nut	4
5	4044989	Capscrew	4
6	1581559	Washer	4
7	4297742	Bracket - Side Sensor, RH	1
8	4704194	Cable	1
9	4704195	Cable	1
10	4303829	Bracket - Side Sensor, LH	1
11	4304749	Sensor (LH)	1
12	4305909	Bracket	1
13	4297499	Lockwasher	3
14	4131523	Capscrew	2
15	4195768	Locknut	2

©2026 HYSTER COMPANY

NOTES

OBJECT DETECTION SYSTEM (FIGURE 22-33)

PAGE 4 OF 5 — PROXIMITY SENSOR

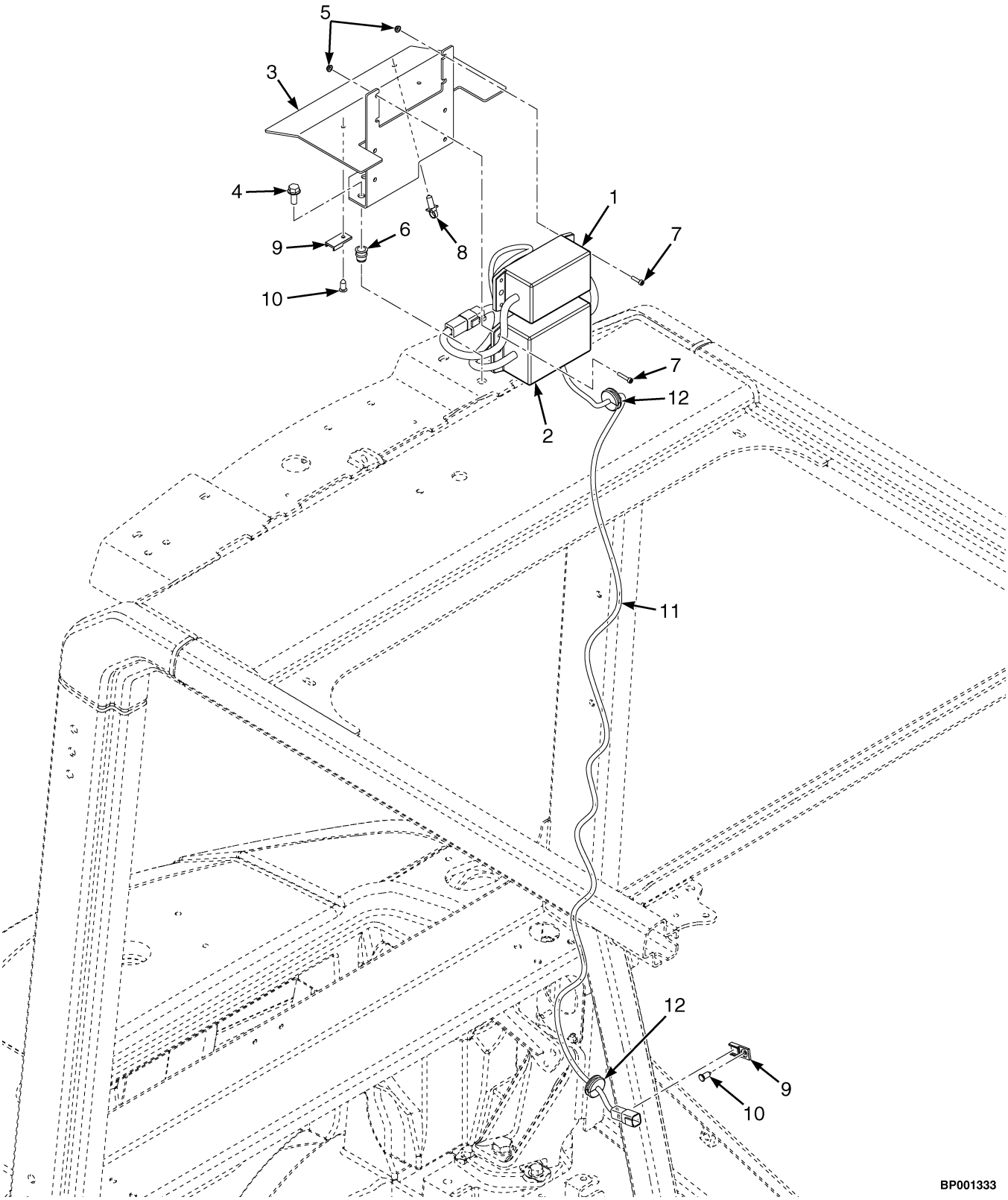

©2026 HYSTER COMPANY

OBJECT DETECTION SYSTEM

PAGE 4 OF 5 – PROXIMITY SENSOR

ITEM	PART NO.	DESCRIPTION	QTY
1	4276349	Electronic Control Module - Collision Avoidance Unit	1
2	4284700	Electronic Control Module - CAN Bus Interface Unit	1
3	4303351	Bracket	1
4	1527880	Capscrew	3
5	1549398	Nut	8
6	1530243	Insert	3
7	292672	Capscrew	8
8	4140361	Cable Clip	1
9	1500912	Clip	3
10	1582464	Fastener	3
11	4706277	Wire Harness - Proximity Sensor w/ Object detection	1
11	4706276	Wire Harness - Proximity Sensor w/o Object detection	1
12	4322358	Grommet	3

©2026 HYSTER COMPANY

OBJECT DETECTION SYSTEM (FIGURE 22-34)

PAGE 5 OF 5 — REAR SENSOR (→ 3/2022)

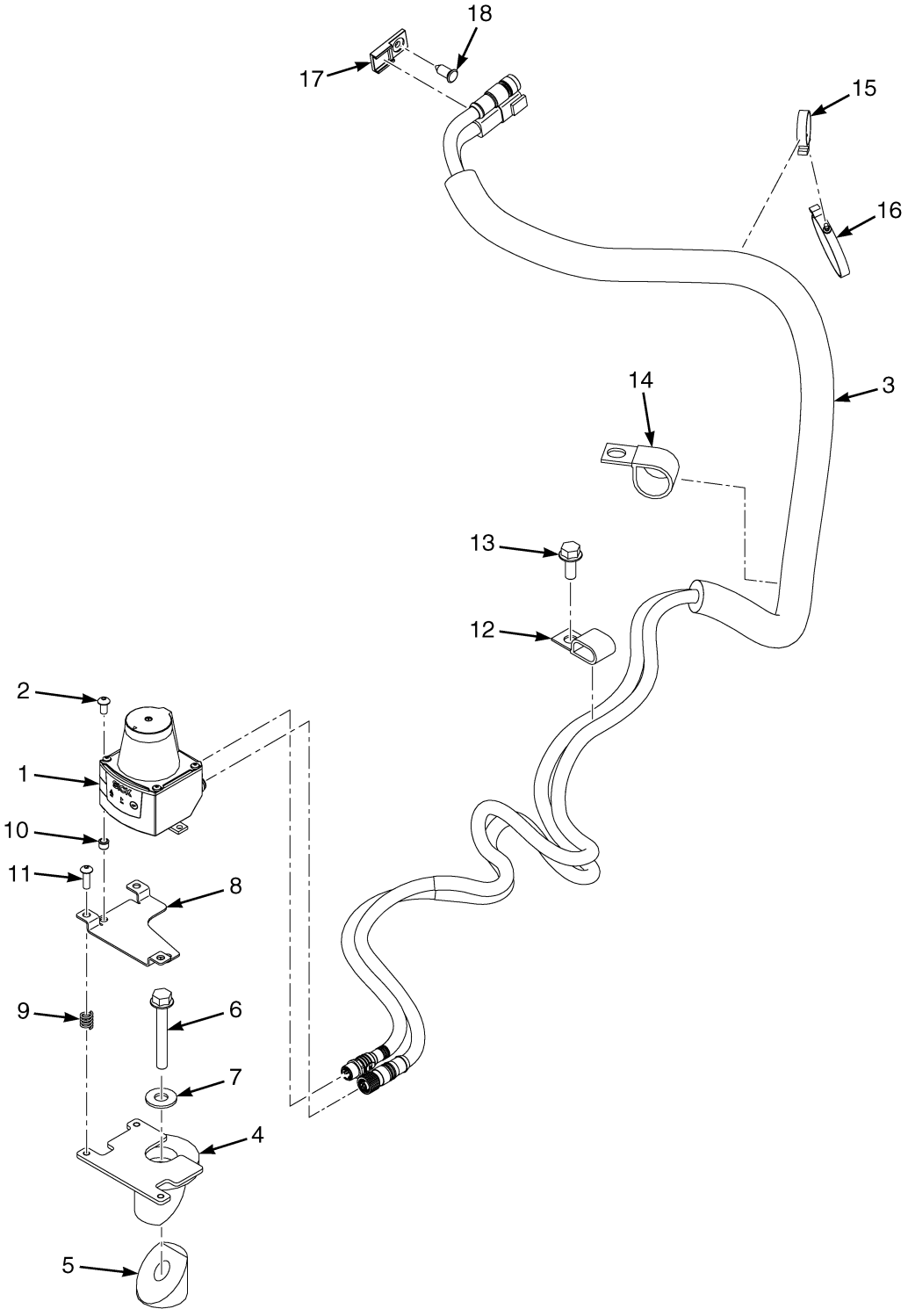

©2026 HYSTER COMPANY

OBJECT DETECTION SYSTEM

PAGE 5 OF 5 – REAR SENSOR (→ 3/2022)

ITEM	PART NO.	DESCRIPTION	QTY
1	4276325	Sensor - LIDAR	1
2	296151	Capscrew	2
3	4705767	Wire Harness - Object Detection Rear Sensor (SWB)	1
3	4705769	Wire Harness - Object Detection Rear Sensor (LWB)	1
4	4302297	Sensor - Assembly, Rear	1
4	4302300	Collar	1
5	4302302	Block	1
6	4197844	Capscrew	1
7	320160	Washer	1
8	4302295	Plate (Adjustment)	1
9	4302296	Spring	3
10	4039104	Insert	2
11	296153	Capscrew	3
12	353304	Clamp	1
12	203230	Clamp (Alternate Part)	1
13	1527880	Capscrew	1
14	4303779	Clamp	1
14	298132	Clamp , Hose (Alternate Part)	1
15	1582605	Clamp	1
16	1502061	Clamp (Swivel)	1
17	1500912	Clip	1
18	1582464	Fastener	1

©2026 HYSTER COMPANY

OBJECT DETECTION SYSTEM (FIGURE 22-35)

PAGE 5 OF 5 — REAR SENSOR (3/2022 →)

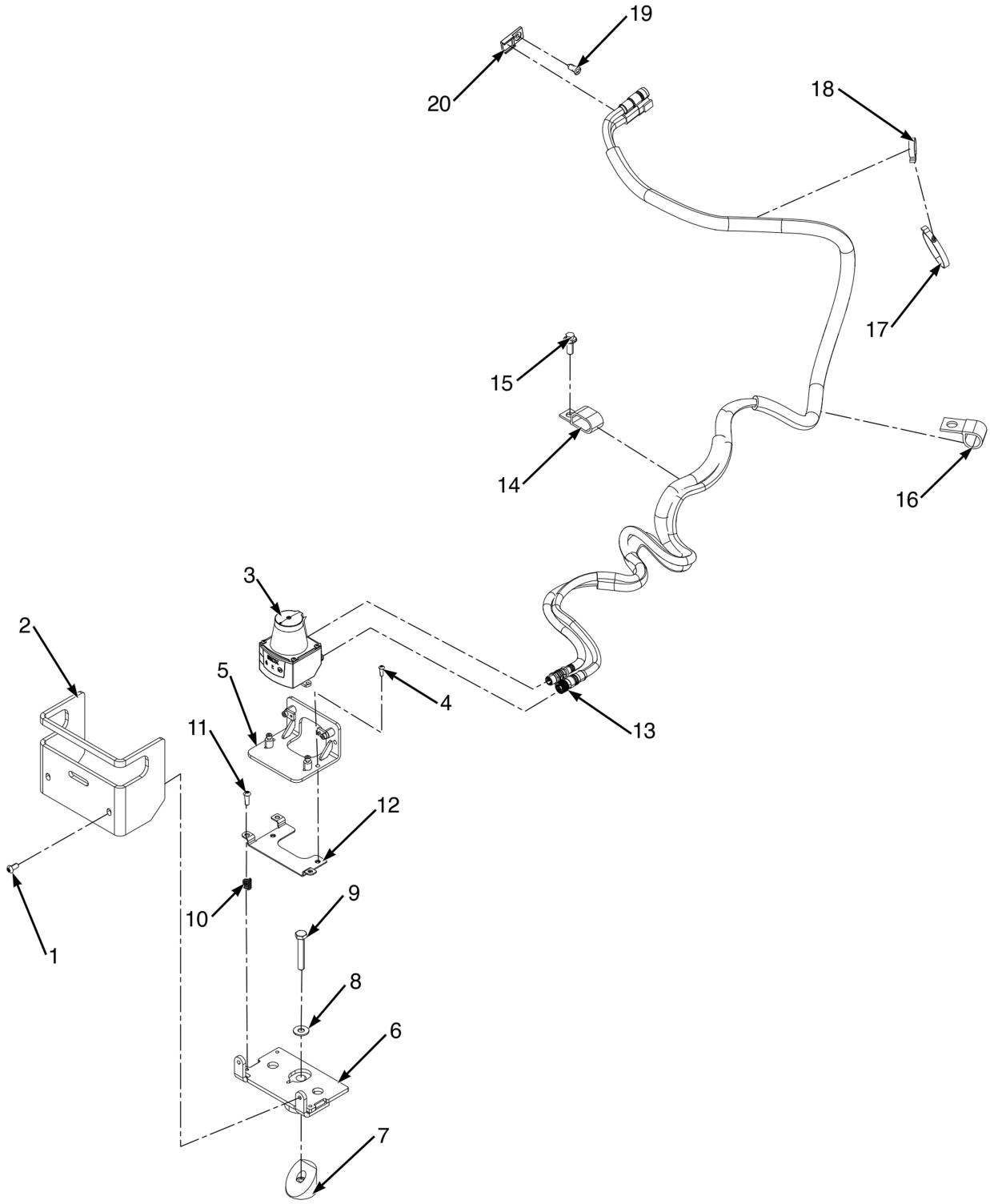

©2026 HYSTER COMPANY

OBJECT DETECTION SYSTEM

PAGE 5 OF 5 – REAR SENSOR (3/2022 →)

ITEM	PART NO.	DESCRIPTION	QTY
1	4198533	Screw	2
2	4334371	Shield (Sensor)	1
3	4276325	Sensor - LIDAR	1
4	4216684	Screw	2
5	4334365	Bracket (Isolator)	1
6	4334481	Mount - Rear Sensor	1
6	4334370	Baseplate	1
7	. . . . .	Block	1
8	1581851	Washer	1
9	1581583	Capscrew	1
10	4333513	Spring	3
11	4185436	Screw	3
13	4705767	Wire Harness - Object Detection Rear Sensor (SWB)	1
13	4705769	Wire Harness - Object Detection Rear Sensor (LWB)	1
14	203230	Clamp	1
15	1527880	Capscrew	1
16	298132	Clamp , Hose	1
17	1502061	Clamp (Swivel)	1
18	1582605	Clamp	1
19	1582464	Fastener	1
20	1500912	Clip	1

OVERHEAD GUARD ACCESSORY OPTIONS (FIGURE 22-36)

MIRRORS AND REAR HANDLE — FIGURE 8 OHG

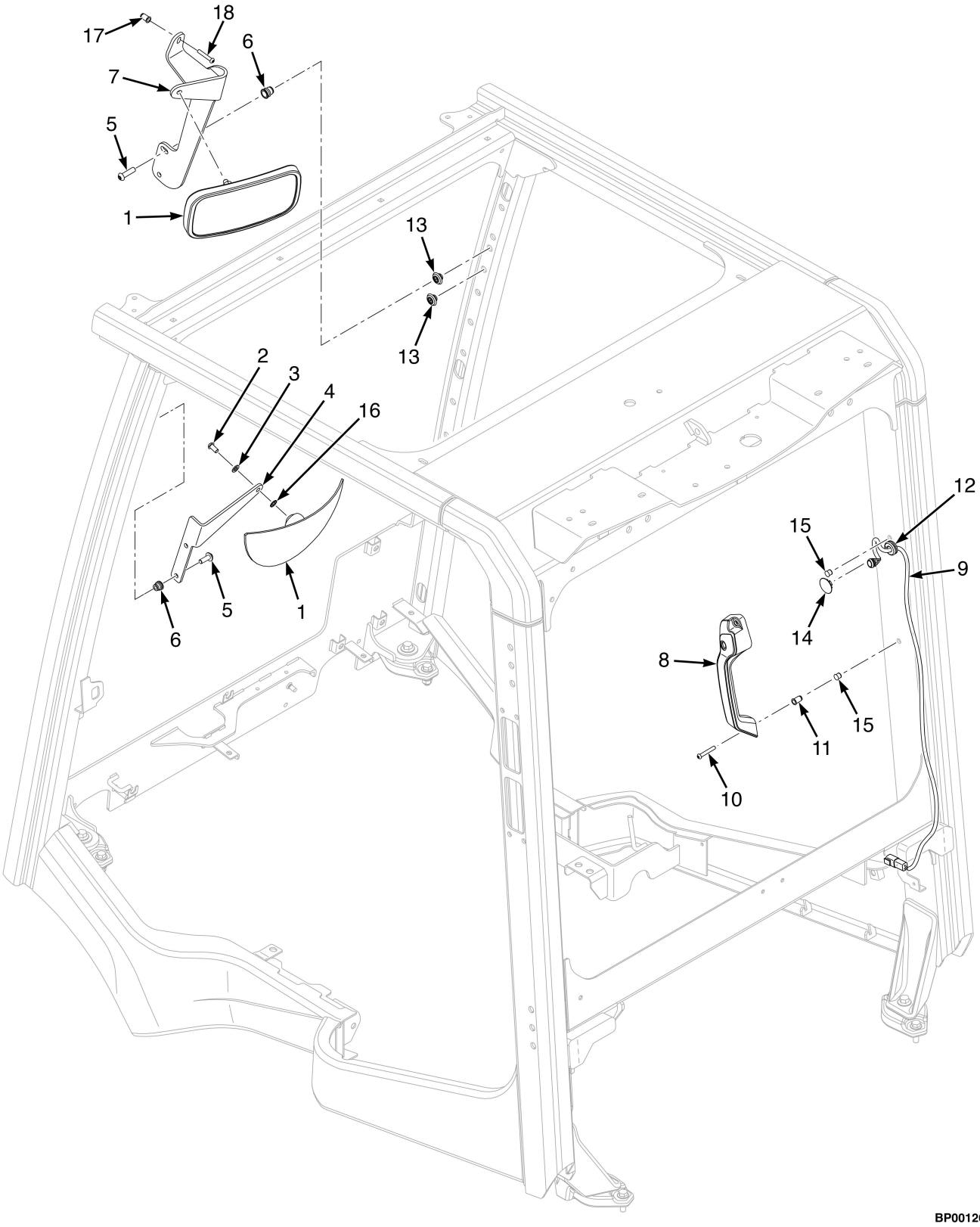

©2026 HYSTER COMPANY

ITEM	PART NO.	DESCRIPTION	QTY
1	2109975	Mirror (Panoramic)	1
1	4610037	Mirror (Dual Mirror)	2
2	4111365	Screw	1
3	4043628	Washer	1
4	4271525	Bracket - Mirror (LH) (Dual Mirrors)	1
4	4275301	Bracket - Panoramic Mirror (LH)	1
5	4273869	Screw	4
5	4280111	Screw (Alternate Part)	4
6	1531557	Insert	4
6	1530243	Insert (Alternate Part)	4
7	4271509	Bracket Wldmt - Mirror (RH) (Dual Mirrors)	1
7	4717879	Bracket Wldmt (RH) (Dual Mirrors) (Alternate Part)	1
8	4695666	Handle , Rear	1
9	4699510	Wire Harness - Switch	1
10	4272817	Screw	2
11	1531001	Insert	2
12	1598220	Grommet	1
13	**a** 1698797	Plug (Black) (0.53 Inch)	4
14	**b** 1599415	Plug (Yellow)	1
15	**b** 1494888	Plug (Yellow)	2
16	296380	Washer	1
17	4284144	Insert	1
18	4196031	Screw	1

FOOTNOTES:

a Used when dual mirrors are not installed.

b Used when rear handle is not used.

PANORAMIC MIRROR (FIGURE 22-37)
RECTANGLE OHG

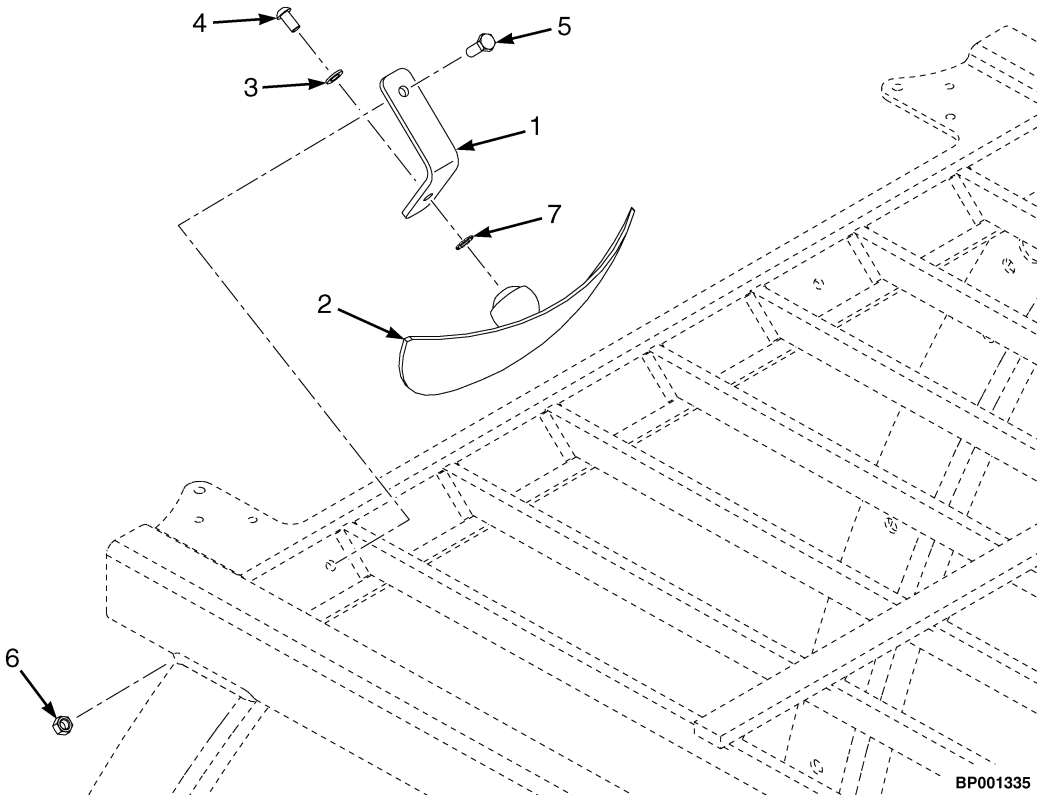

ITEM	PART NO.	DESCRIPTION	QTY
1	4285420	Plate - Panoramic Mirror Mount	1
2	2109975	Mirror	1
3	4043628	Washer	1
4	4111365	Screw	1
5	4273869	Screw	1
6	4309808	Nut	1
7	296380	Washer	1

©2026 HYSTER COMPANY

REAR CAMERA (FIGURE 22-38)

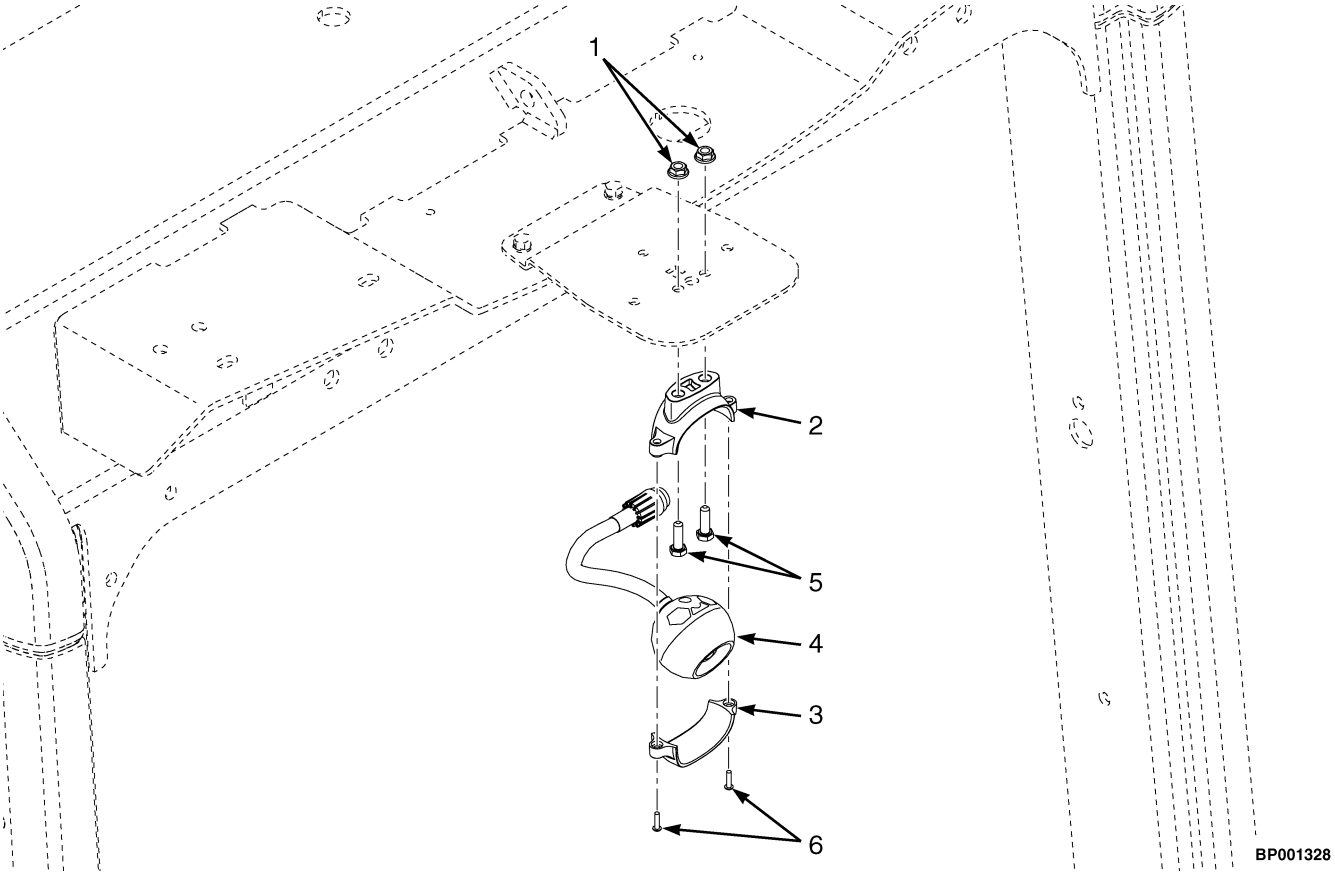

ITEM	PART NO.	DESCRIPTION	QTY
1	~~1307884~~		
	1514429	Nut	2
2	4694046	Retainer - Camera Bottom	1
3	4694045	Retainer - Camera Top	1
4	4145255	Camera (Rear View, 118 Degrees)	1
5	292501	Capscrew	2
6	296145	Capscrew	2
	a	Wire Harness (☞Figure 11-127, ☞Figure 11-128)	1

FOOTNOTES:

a Not Illustrated

STRING CUTTER (FIGURE 22-39)

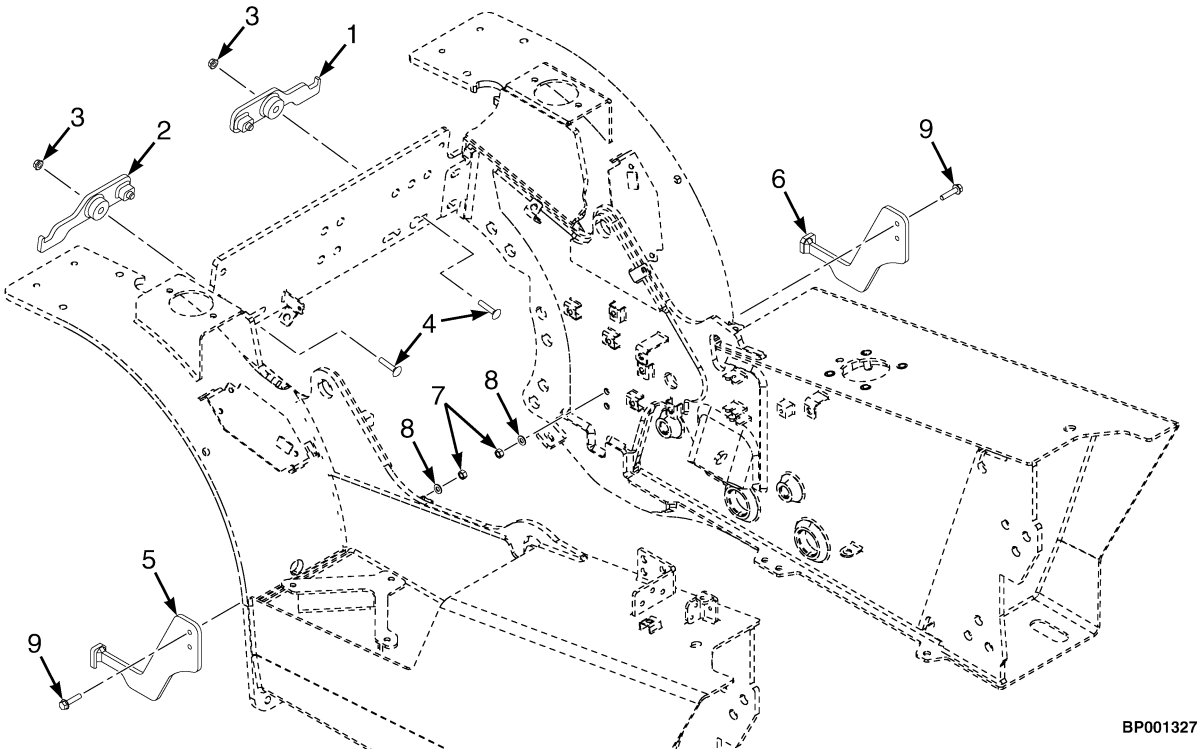

ITEM	PART NO.	DESCRIPTION	QTY
1	4315608	Guard - String Cutter, RH (Std Solid Tire 28x9-15)	1
1	4261185	Guard - Brake Line String Cutter	1
1	4315610	Guard - String Cutter, RH (Std Solid Tire 7x12-15)	1
1	4261185	Guard - Brake Line String Cutter	1
2	4315609	Guard - String Cutter, LH (Std Solid Tire 28x9-15)	1
2	4230236	Guard - Brake Line String Cutter	1
2	4315611	Guard - String Cutter, LH (Std Solid Tire 7x12-15)	1
2	4230236	Guard - Brake Line String Cutter	1
3	~~1382472~~		
	1502543	Nut	2
4	4016730	Bolt , Square Neck	2
5	4326843	Guard - String Cutter, LH, Lower	1
6	4326842	Guard - String Cutter, RH, Lower	1
7	2022719	Nut	4
8	~~4217234~~		
	320157	Washer	4
9	1528482	Capscrew	4

©2026 HYSTER COMPANY

TILT CYLINDER BOOTS (FIGURE 22-40)

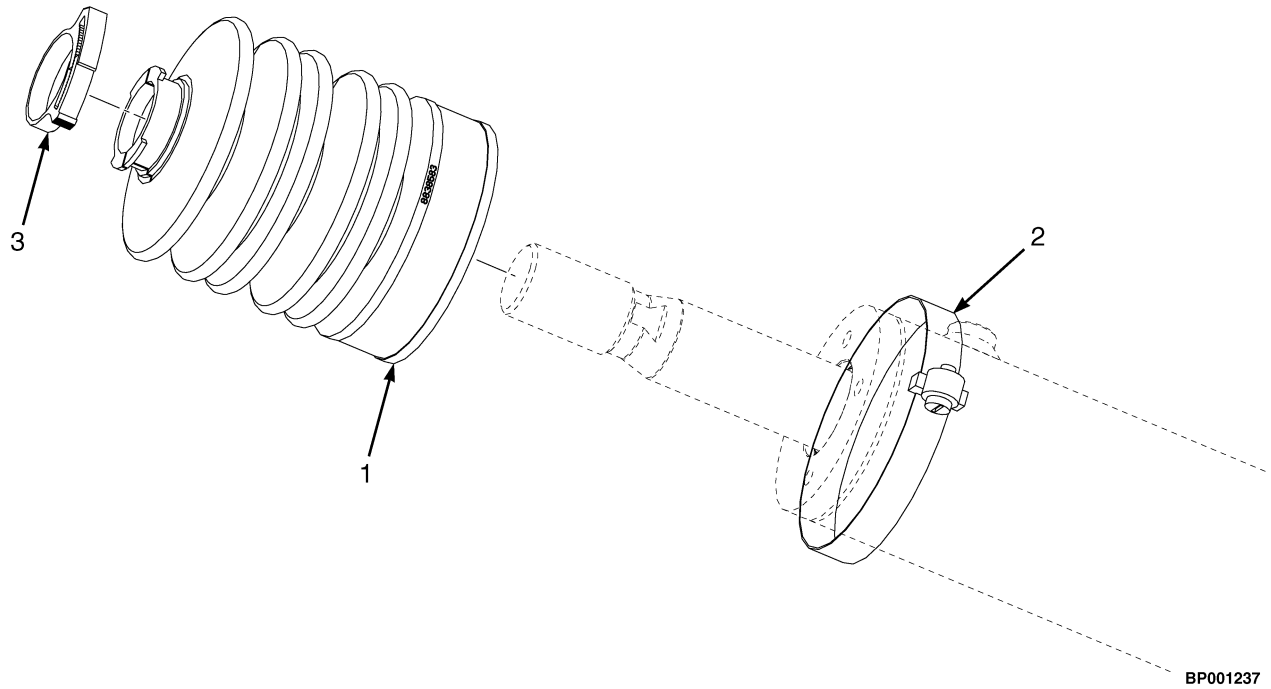

KEY:
A: H40A-H50A
B: H60A-H70A

ITEM	PART NO.	DESCRIPTION	QTY A	QTY B
1	~~4675806~~			
	4715432	Boot - Tilt Cylinder	2	..
1	~~4675807~~			
	4715433	Boot - Tilt Cylinder	..	2
2	115696	Hose Clamp	2	..
2	78286	Clamp	..	2
3	4263863	Clamp , Snap Grip (1.0-2.5T)	2	..
3	4263864	Clamp , Snap Grip (3.0-3.5T)	..	2

TOP AND FRONT SUN SHADE (FIGURE 22-41)

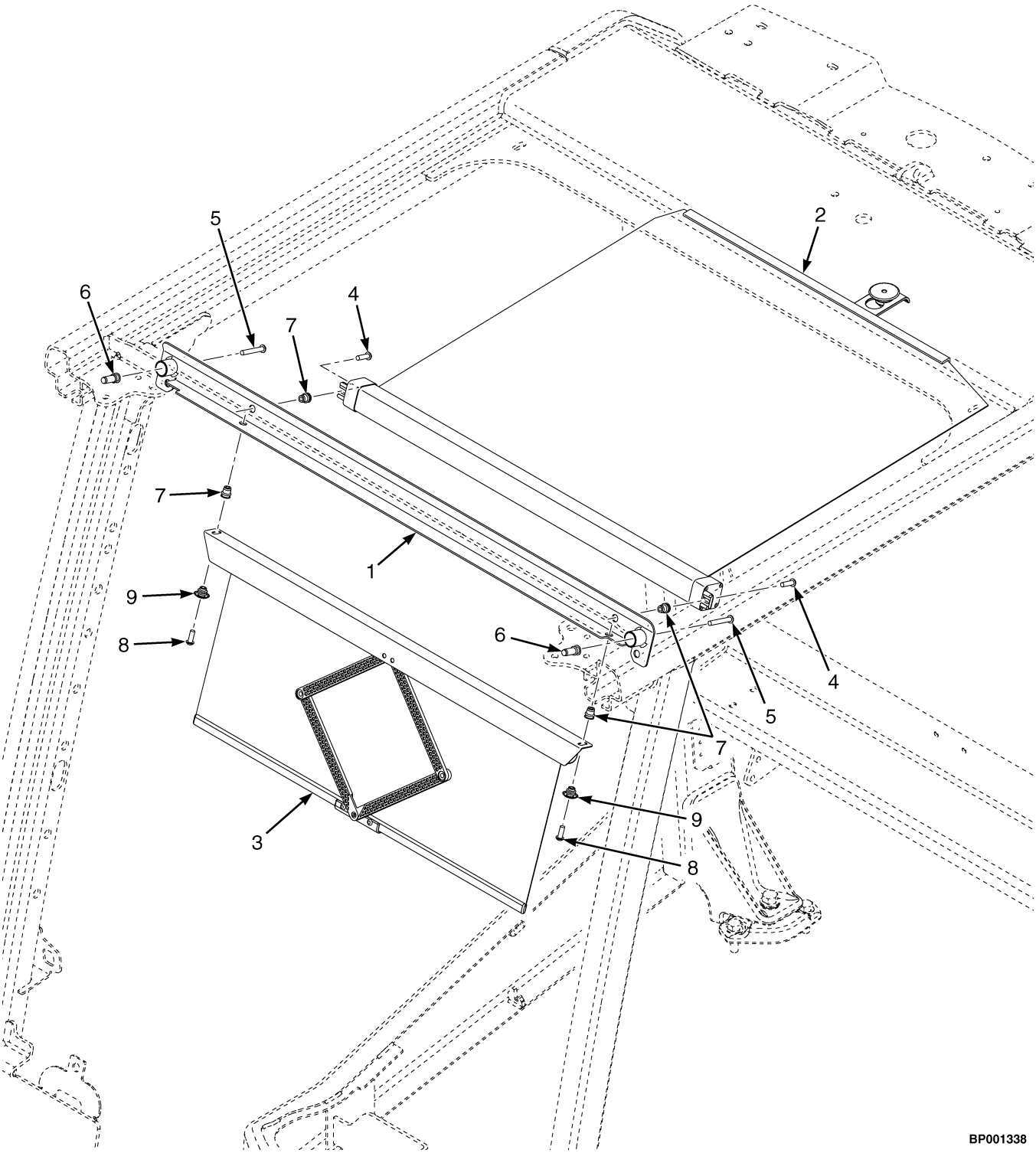

©2026 HYSTER COMPANY

TOP AND FRONT SUN SHADE

KEY:
A: W/ Cab
B: Glass Top Screen

ITEM	PART NO.	DESCRIPTION	QTY A	QTY B
1	4698172	Mounting Weldment - Bracket	1	1
2	~~4698173~~			
	4715875	Sunshade - top	1	1
2	4743802	Sunshade (Top) (Alternate Part)	1	1
3	4698174	Sunshade - Front	1	..
4	296160	Capscrew	2	2
4	4196032	Screw (Alternate Part)	2	2
4	4309801	Screw (Alternate Part)	2	2
5	1611112	Capscrew	2	2
5	4216689	Screw (Alternate Part)	2	2
6	. . . . .	Insert	2	2
7	1531558	Insert	4	2
8	296159	Capscrew	2	..
8	4309803	Screw (Alternate Part)	2	..
9	1698796	Plug (Black) (0.39 Inch)	..	2

©2026 HYSTER COMPANY

AUXILIARY EXTENSION TUBES (FIGURE 22-42)

STANDARD CARRIAGE — TWO STAGE LIMITED FREE-LIFT (→ PENDING PER ECN 169336)

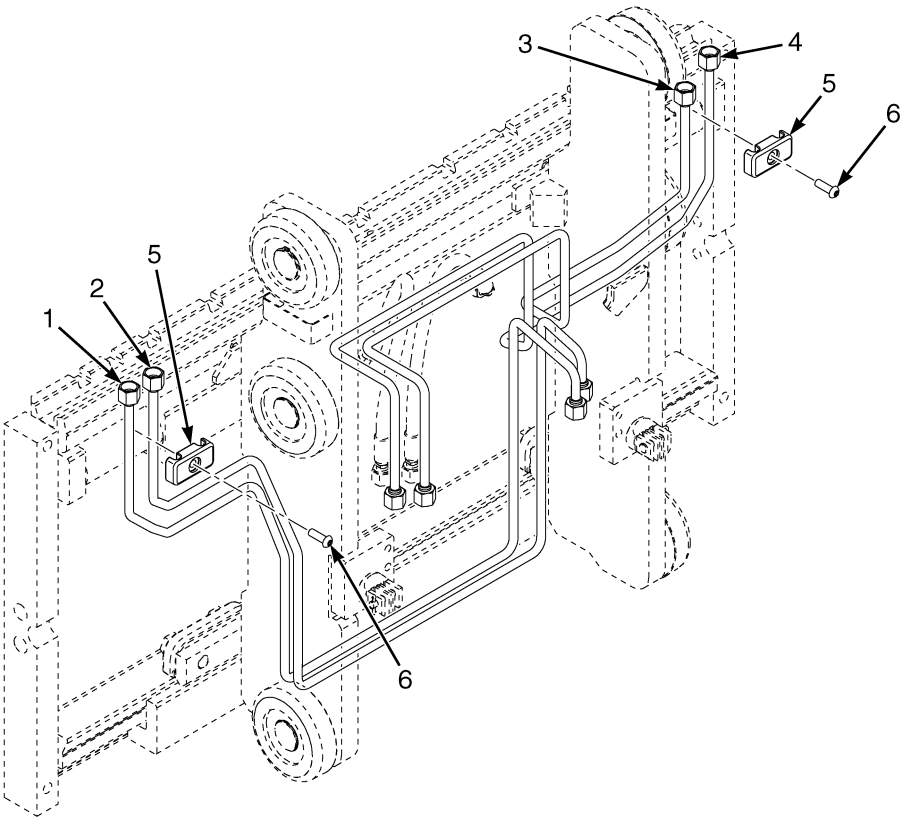

KEY:
A: Class II
B: Class III

ITEM	PART NO.	DESCRIPTION	QTY A	QTY B
1	4693648	Tube Assy	..	1
1	4715095	Tube Assy (Alternate Part)	..	1
1	4693629	Tube Assy	1	..
1	4715091	Tube Assy (Alternate Part)	1	..
1	4693935	Tube Assy (LRGT)	1	..
1	4714869	Tube Assy (LRGT) (Alternate Part)	1	..
2	4693649	Tube Assy	..	1
2	4715096	Tube Assy (Alternate Part)	..	1
2	4693630	Tube Assy	1	..
2	4715092	Tube Assy (Alternate Part)	1	..
2	4693936	Tube Assy (LRGT)	1	..
2	4714870	Tube Assy (LRGT) (Alternate Part)	1	..
3	4693634	Tube Assy	..	1
3	4715103	Tube Assy (Alternate Part)	..	1
3	4693650	Tube Assy	1	..
3	4715099	Tube Assy (Alternate Part)	1	..
3	4693933	Tube Assy (LRGT)	1	..
3	4715101	Tube Assy (LRGT) (Alternate Part)	1	..

©2026 HYSTER COMPANY

KEY:
A: Class II
B: Class III

ITEM	PART NO.	DESCRIPTION	QTY A	QTY B
4	4693635	Tube Assy	..	1
4	4715104	Tube Assy (Alternate Part)	..	1
4	4693651	Tube Assy	1	..
4	4715100	Tube Assy (Alternate Part)	1	..
4	4693934	Tube Assy (LRGT)	1	..
4	4715102	Tube Assy (LRGT) (Alternate Part)	1	..
5	4268626	Clamp	2	2
6	4196035	Screw	2	2
6	4280111	Screw (Alternate Part)	2	2

AUXILIARY EXTENSION TUBES (FIGURE 22-43)

STANDARD CARRIAGE — TWO STAGE LIMITED FREE-LIFT (PENDING PER ECN 169336 →)

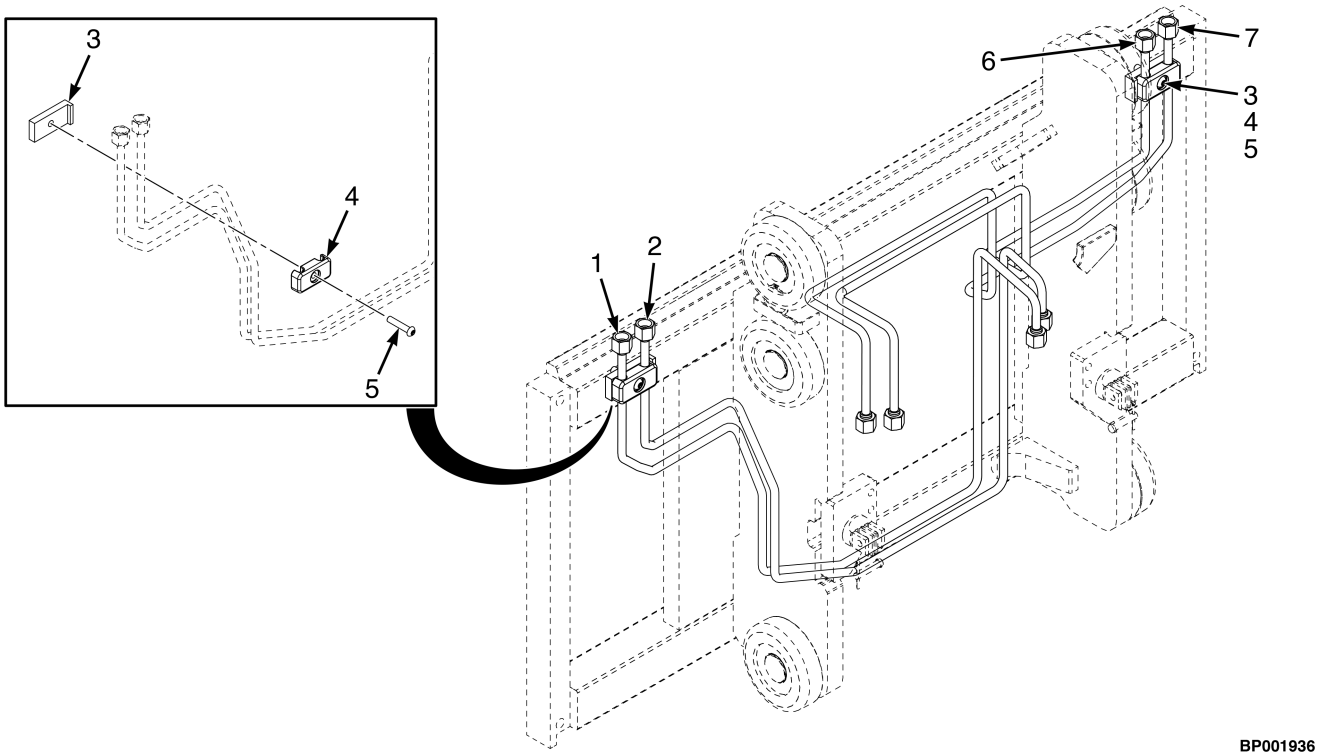

KEY:
A: Class II
B: Class III

ITEM	PART NO.	DESCRIPTION	QTY A	QTY B
1	81063881	Tube Assy	1	..
1	81063887	Tube Assy (28x9 Tires)	1	..
1	81063885	Tube Assy	..	1
2	81063882	Tube Assy	1	..
2	81063888	Tube Assy (28x9 Tires)	1	..
2	81063886	Tube Assy	..	1
3	81063015	Spacer Block	2	2
4	4268626	Clamp	2	2
5	4216690	Screw	2	2
6	81063901	Tube Assy	1	..
6	81063907	Tube Assy (28x9 Tires)	1	..
6	81063905	Tube Assy	..	1
7	81063902	Tube Assy	1	..
7	81063908	Tube Assy (28x9 Tires)	1	..
7	81063906	Tube Assy	..	1

©2026 HYSTER COMPANY

AUXILIARY EXTENSION TUBES (FIGURE 22-44)

STANDARD CARRIAGE — TWO AND THREE STAGE FFL (→ PENDING PER ECN 169336)

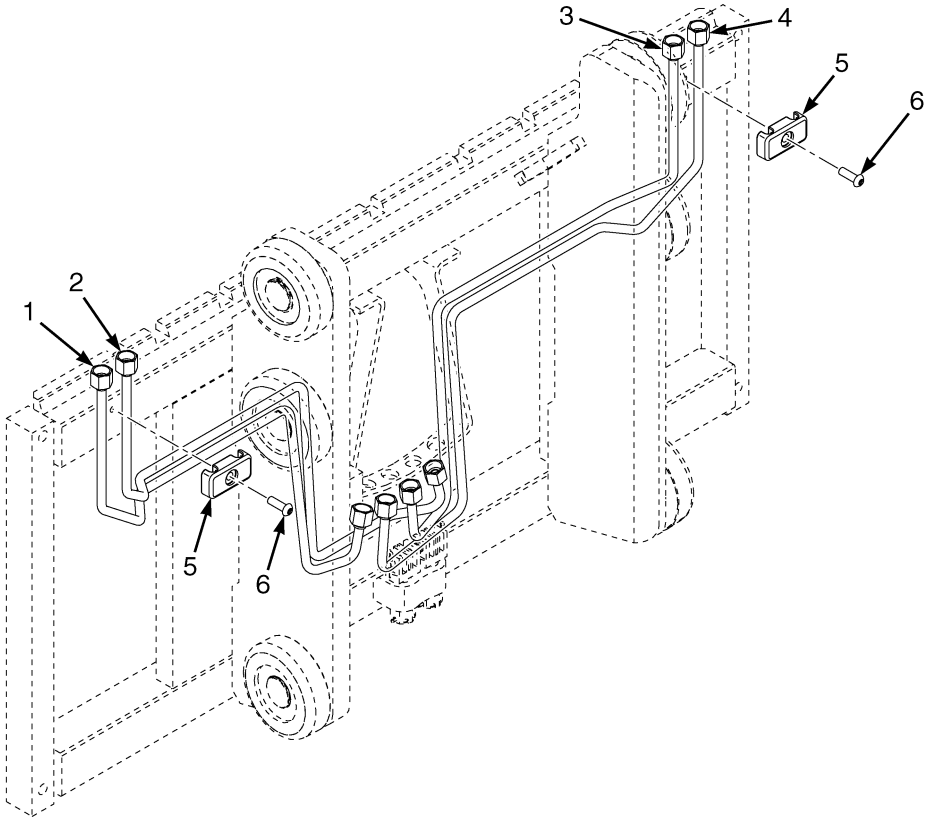

KEY:
A: Class II
B: Class III

ITEM	PART NO.	DESCRIPTION	QTY A	QTY B
1	4669046	Tube Assy	1	..
1	4693690	Tube Assy	..	1
2	4669045	Tube Assy	1	..
2	4693691	Tube Assy	..	1
3	4693533	Tube Assy	1	..
3	4693688	Tube Assy	..	1
4	4693534	Tube Assy	1	..
4	4693689	Tube Assy	..	1
5	4268626	Clamp	2	2
6	4196035	Screw	2	2
6	4280111	Screw (Alternate Part)	2	2

AUXILIARY EXTENSION TUBES (FIGURE 22-45)

STANDARD CARRIAGE — TWO AND THREE STAGE FFL (PENDING PER ECN 169336 →)

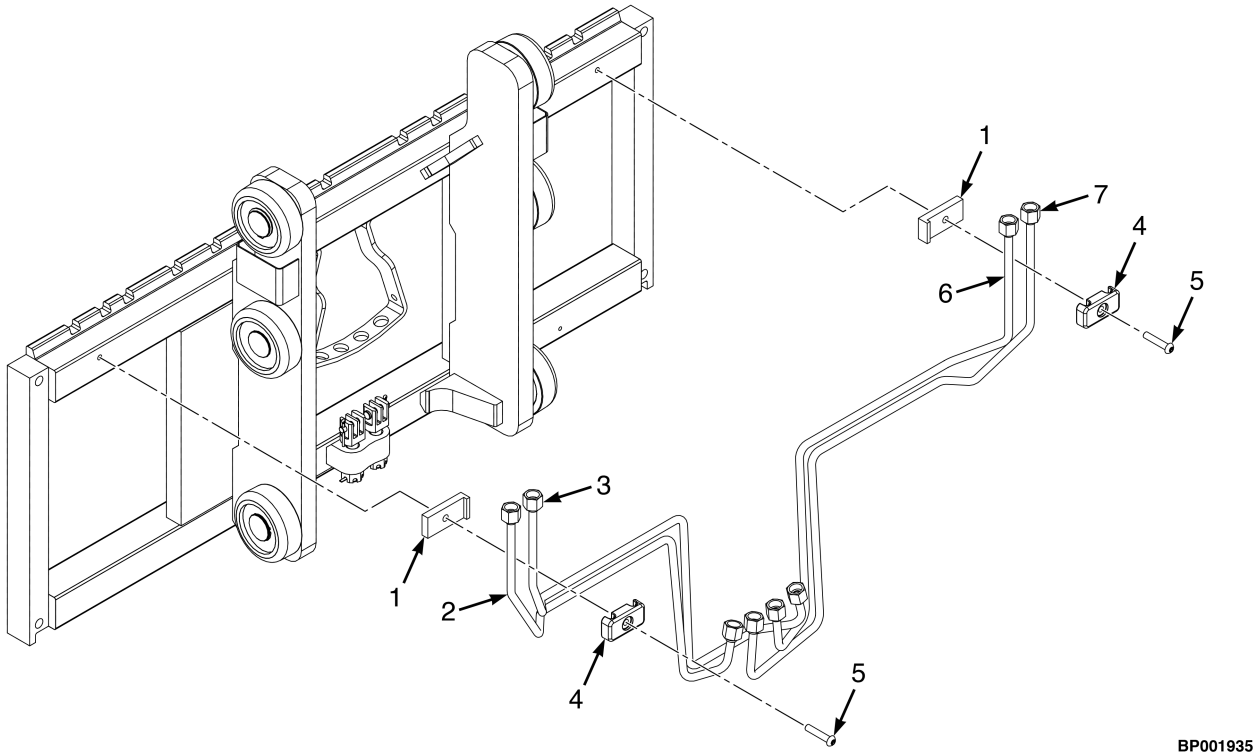

KEY:
A: Class II
B: Class III

ITEM	PART NO.	DESCRIPTION	QTY A	QTY B
1	81063015	Spacer Block	2	2
2	81063876	Tube Assy	1	..
2	81063883	Tube Assy	..	1
3	81063875	Tube Assy	1	..
3	81063884	Tube Assy	..	1
4	4268626	Clamp	2	2
5	4216690	Screw	2	2
6	81063893	Tube Assy	1	..
6	81063903	Tube Assy	..	1
7	81063894	Tube Assy	1	..
7	81063904	Tube Assy	..	1

©2026 HYSTER COMPANY

AUXILIARY EXTENSION TUBES (FIGURE 22-46)
ISS CARRIAGE — TWO STAGE LIMITED FREE-LIFT

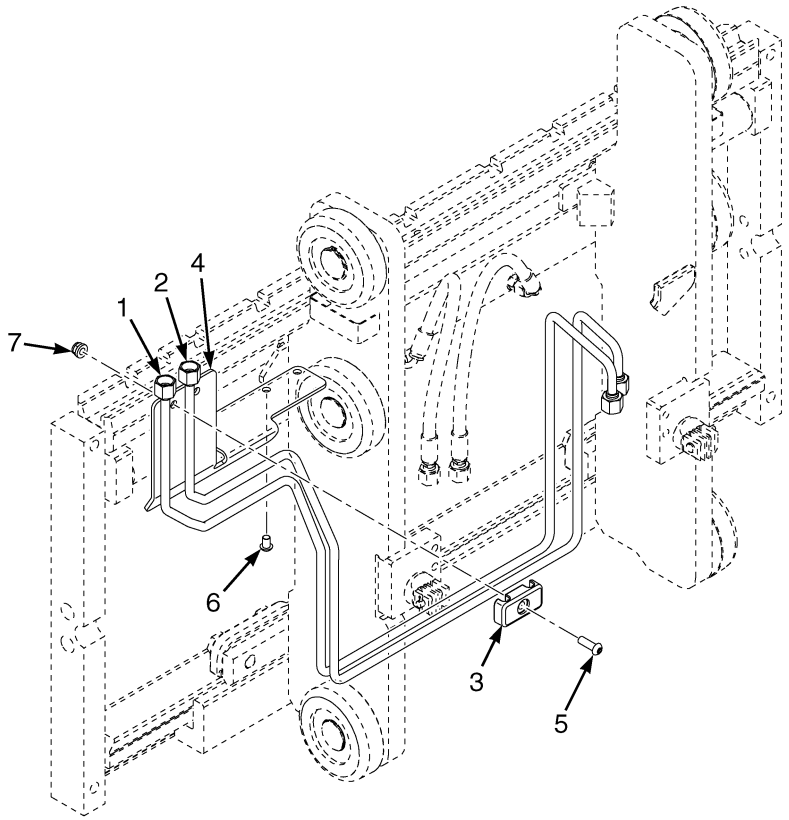

BP001253

KEY:
A: Class II
B: Class III

ITEM	PART NO.	DESCRIPTION	QTY A	QTY B
1	4693629	Tube Assy	1	..
1	**a** 4715091	Tube Assy (Alternate Part)	1	..
1	**b** 4715093	Tube Assy	1	..
1	4693935	Tube Assy (LRGT)	1	..
1	4693648	Tube Assy	..	1
1	4715095	Tube Assy (Alternate Part)	..	1
2	4693630	Tube Assy	1	..
2	**a** 4715092	Tube Assy (Alternate Part)	1	..
2	**b** 4715094	Tube Assy	1	..
2	4693936	Tube Assy (LRGT)	1	..
2	4693649	Tube Assy	..	1
2	4715096	Tube Assy (Alternate Part)	..	1
3	4268626	Clamp	1	1
4	4272397	Bracket - ISS Aux Extension Tube	1	1
5	4196035	Screw	1	1
5	4280111	Screw (Alternate Part)	1	1
6	4196034	Screw	1	1
7	4187690	Locknut	1	1

©2026 HYSTER COMPANY

FOOTNOTES:

a → 7/2021

b 7/2021 →

©2026 HYSTER COMPANY

AUXILIARY EXTENSION TUBES (FIGURE 22-47)

ISS CARRIAGE — TWO AND THREE STAGE FULL FREE-LIFT

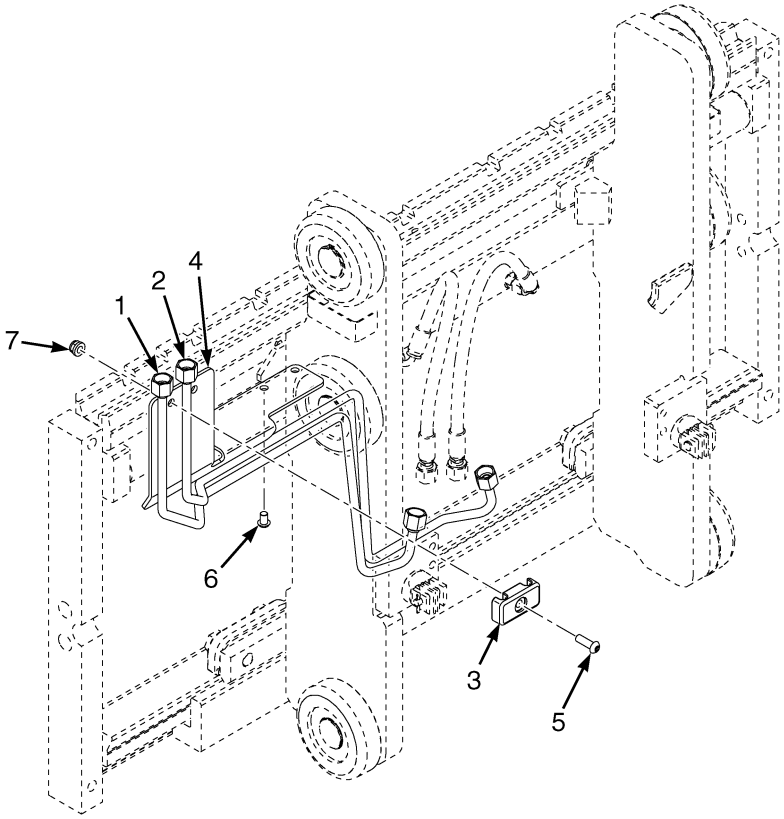

BP001254

KEY:
A: Class II
B: Class III

ITEM	PART NO.	DESCRIPTION	QTY A	QTY B
1	4669046	Tube Assy	1	..
1	4715088	Tube Assy (Alternate Part)	1	..
1	4693690	Tube Assy	..	1
1	4715089	Tube Assy (Alternate Part)	..	1
2	4669045	Tube Assy	1	..
2	4715087	Tube Assy (Alternate Part)	1	..
2	4693691	Tube Assy	..	1
2	4715090	Tube Assy (Alternate Part)	..	1
3	4268626	Clamp	1	1
4	4272397	Bracket - ISS Aux Extension Tube	1	1
5	4196035	Screw	1	1
5	4280111	Screw (Alternate Part)	1	1
6	4196034	Screw	2	2
7	4187690	Locknut	1	1

QUICK DISCONNECT FITTINGS (FIGURE 22-48)

AUXILIARY EXTENSION TUBES

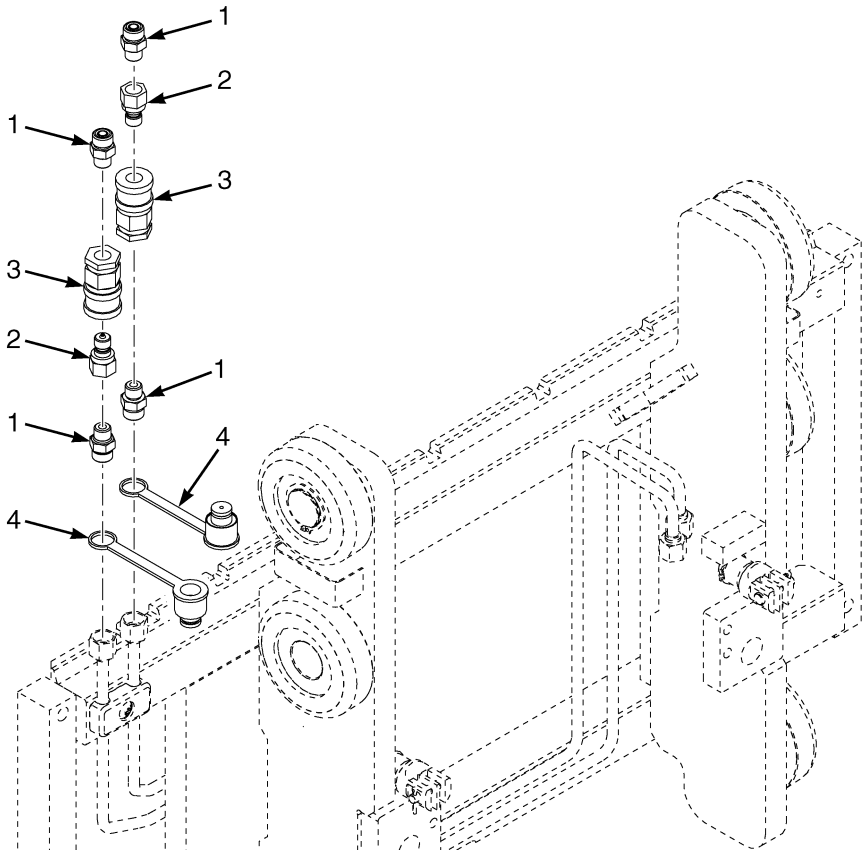

ITEM	PART NO.	DESCRIPTION	QTY
1	1486740	Fitting	4
1	~~6992657~~		
	265787	O-Ring	1
2	1483664	Fitting	2
3	1483663	Quick Disconnect Fitting	2
4	1483661	Dust Cap	2

©2026 HYSTER COMPANY

NOTES

FORK POSITIONER (FIGURE 22-49)

BOLZONI — LIMITED FREE-LIFT

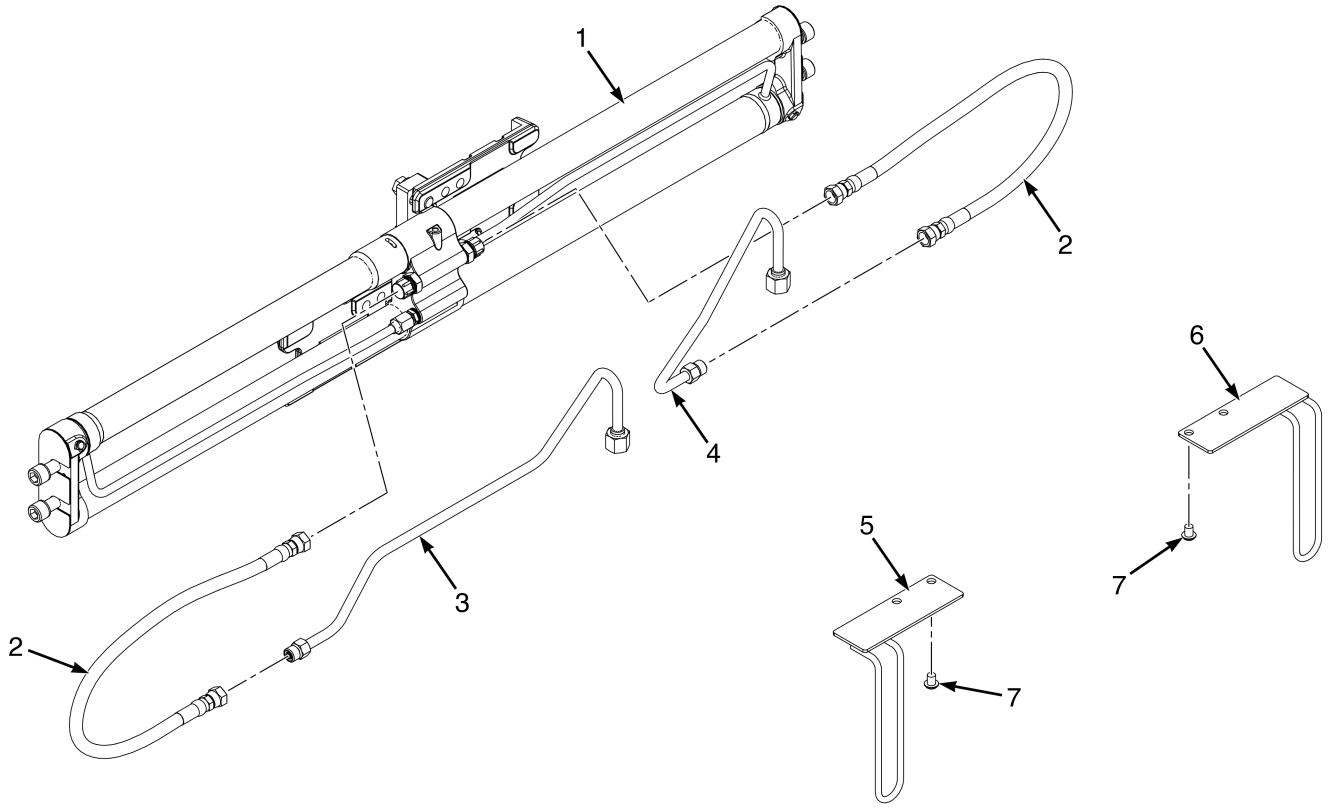

BP290511

©2026 HYSTER COMPANY

FORK POSITIONER
BOLZONI – LIMITED FREE-LIFT

KEY:
A: Class II (42")
B: Class III (42")
C: Class III (48")

ITEM	PART NO.	DESCRIPTION	QTY A	QTY B	QTY C
1	4722167	Fork Positioner Carriage (☞Figure 22-54).....	1	1	..
1	4722168	Fork Positioner Carriage (☞Figure 22-54).....	..	..	1
2	4690828	Hose Assy	2	..	..
2	~~4618718~~				
	4611913	Hose Assy	..	2	2
3	4687887	Tube Assy (LH)	1	..	..
3	4729480	Tube Assy (LH)	..	1	1
4	4687886	Tube Assy (RH)	1	..	..
4	4729479	Tube Assy (RH)	..	1	1
5	4359259	Bracket Wldmt (LH)	1	..	..
5	4359260	Bracket Wldmt (LH)	..	1	1
6	4359257	Bracket Wldmt (RH)	1	..	..
6	4359258	Bracket Wldmt (RH)	..	1	1
7	296163	Capscrew	4	4	4

FORK POSITIONER (FIGURE 22-50)

CASCADE — LIMITED FREE-LIFT

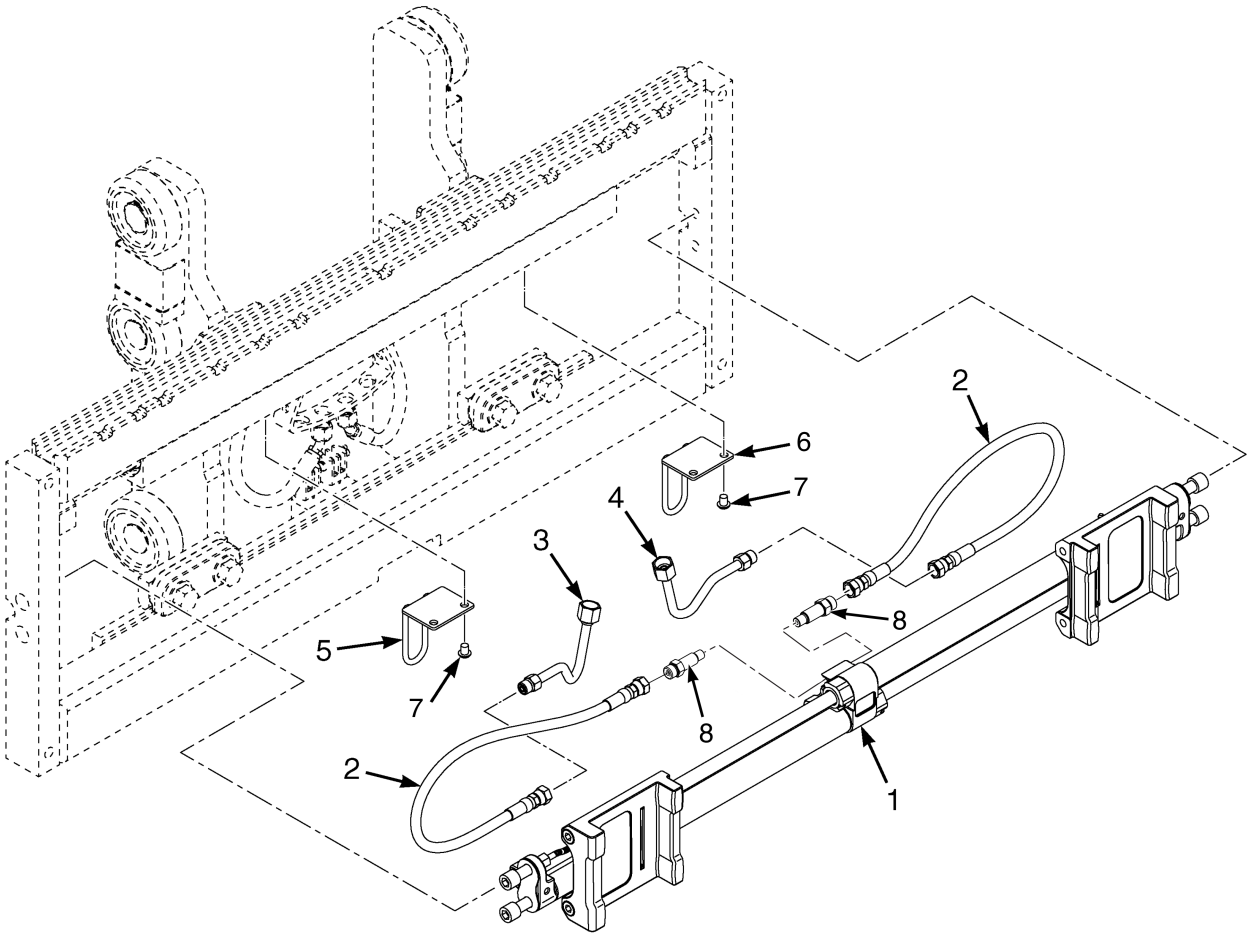

BP001291

©2026 HYSTER COMPANY

FORK POSITIONER
CASCADE – LIMITED FREE-LIFT

KEY:
A: Class II
B: Class III (1067mm)
C: Class III (1220mm)

ITEM	PART NO.	DESCRIPTION	QTY A	QTY B	QTY C
	4369202	Fork Positioner Carriage (Assembly)	1	..	..
	4369208	Fork Positioner Carriage (Assembly)	..	1	..
	4369209	Fork Positioner Carriage (Assembly)	..	..	1
1	4611880	Fork Positioner Carriage (42 in.) (☞Figure 22-53)	1	..	..
1	4611882	Fork Positioner Carriage (42 in.) (☞Figure 22-53)	..	1	..
1	4694462	Fork Positioner Carriage (48in) (☞Figure 22-53)	..	..	1
2	4690828	Hose Assy	2	..	..
2	~~4618718~~				
	4611913	Hose Assy	..	2	2
3	4687886	Tube Assy (RH)	1	1	1
4	4687887	Tube Assy (LH)	1	1	1
5	**a** 4273212	Bracket Wldmt - Fork Positioner Hose Guide	1	..	..
5	**c** 4359257	Bracket Wldmt (RH) (Alternate Part)	1	..	..
5	**a** 4273213	Bracket Wldmt - Fork Positioner Hose Guide	..	1	1
5	**c** 4359258	Bracket Wldmt (RH) (Alternate Part)	..	1	1
6	**a** 4273212	Bracket Wldmt - Fork Positioner Hose Guide	1	..	..
6	**c** 4359259	Bracket Wldmt (LH) (Alternate Part)	1	..	..
6	**a** 4273213	Bracket Wldmt - Fork Positioner Hose Guide	..	1	1
6	**c** 4359260	Bracket Wldmt (LH) (Alternate Part)	..	1	1
7	296163	Capscrew	4	4	4
8	**b** 4355467	Fitting	2	2	2

FOOTNOTES:

a → 12/2022
b 12/2022 ↔ 8/2023
c 12/2022 →

FORK POSITIONER (FIGURE 22-51)

BOLZONI — FULL FREE-LIFT

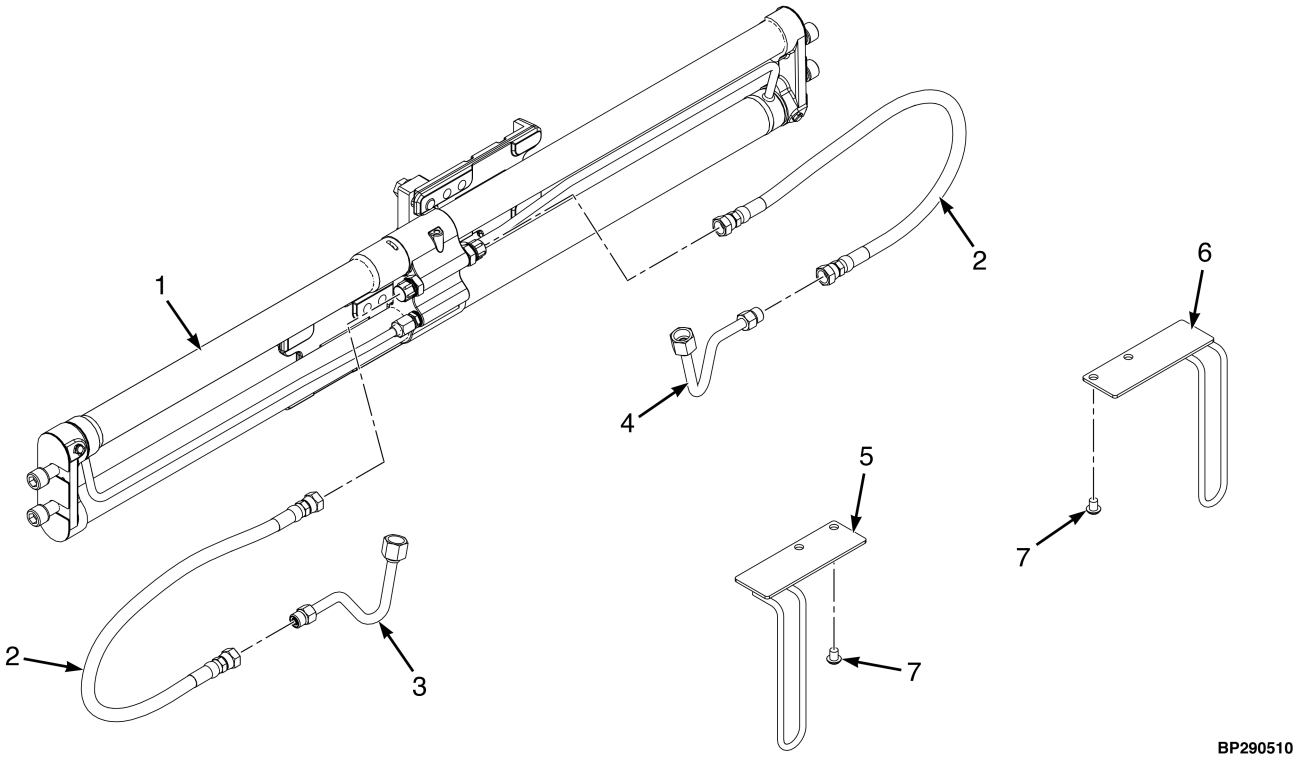

KEY:
A: Class II (42")
B: Class III (42")
C: Class III (48")

ITEM	PART NO.	DESCRIPTION	QTY A	QTY B	QTY C
1	4722167	Fork Positioner Carriage (☞Figure 22-54)	1	1	..
1	4722168	Fork Positioner Carriage (☞Figure 22-54)	..	..	1
2	~~4618718~~				
	4611913	Hose Assy	2	2	2
3	4687802	Tube Assy (LH)	1	1	1
4	4687801	Tube Assy (RH)	1	1	1
5	4359259	Bracket Wldmt (LH)	1	..	..
5	4359260	Bracket Wldmt (LH)	..	1	1
6	4359257	Bracket Wldmt (RH)	1	..	..
6	4359258	Bracket Wldmt (RH)	..	1	1
7	296163	Capscrew	4	4	4

©2026 HYSTER COMPANY

NOTES

FORK POSITIONER (FIGURE 22-52)
CASCADE — FULL FREE-LIFT

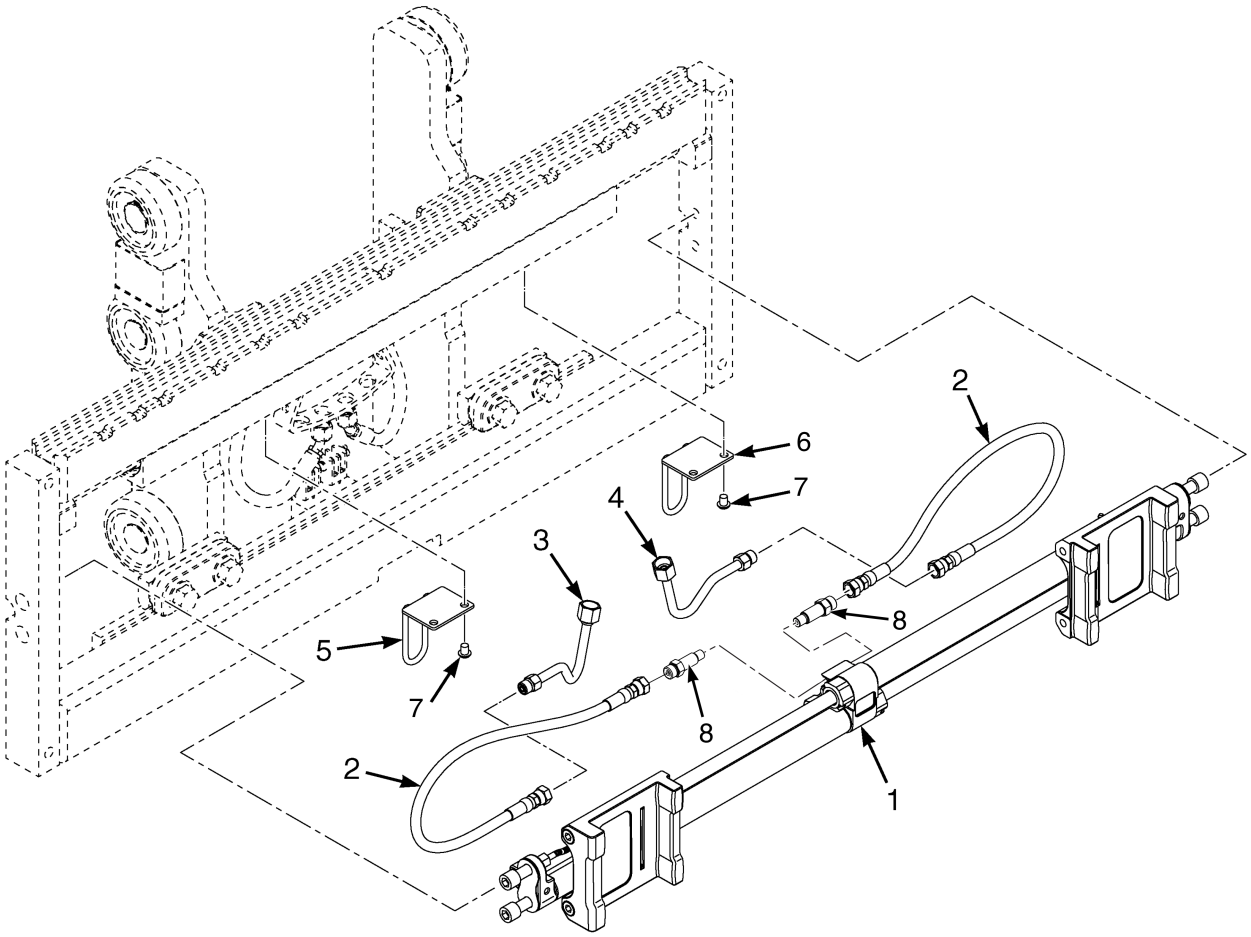

BP001291

©2026 HYSTER COMPANY

FORK POSITIONER

CASCADE – FULL FREE-LIFT

KEY:
A: Class II
B: Class III (1067mm)
C: Class III (1220mm)

ITEM	PART NO.	DESCRIPTION	QTY A	QTY B	QTY C
	4369196	Fork Positioner Carriage (Assembly)	1	..	..
	4369197	Fork Positioner Carriage (Assembly)	..	1	..
	4369199	Fork Positioner Carriage (Assembly)	..	..	1
1	4611880	Fork Positioner Carriage (42 in.) (☞Figure 22-53)	1	..	..
1	4611882	Fork Positioner Carriage (42 in.) (☞Figure 22-53)	..	1	..
1	4694462	Fork Positioner Carriage (48in) (☞Figure 22-53)	..	..	1
2	~~4618718~~				
	4611913	Hose Assy	2	2	2
3	4687801	Tube Assy (RH)	1	1	1
4	4687802	Tube Assy (LH)	1	1	1
5	**a** 4273212	Bracket Wldmt - Fork Positioner Hose Guide	1	..	..
5	**b** 4359257	Bracket Wldmt (RH)	1	..	..
5	**a** 4273213	Bracket Wldmt - Fork Positioner Hose Guide	..	1	1
5	**b** 4359258	Bracket Wldmt (RH)	..	1	1
6	**a** 4273212	Bracket Wldmt - Fork Positioner Hose Guide	1	..	..
6	**b** 4359259	Bracket Wldmt (LH)	1	..	..
6	**a** 4273213	Bracket Wldmt - Fork Positioner Hose Guide	..	1	1
6	**b** 4359260	Bracket Wldmt (LH)	..	1	1
7	296163	Capscrew	4	4	4
8	**b** 4355467	Fitting	2	2	2
8	4373261	Fitting (Alternate Part)	2	2	2

FOOTNOTES:

a → 12/2022

b 12/2022 →

FORK POSITIONER ASSEMBLY (FIGURE 22-53)
CASCADE

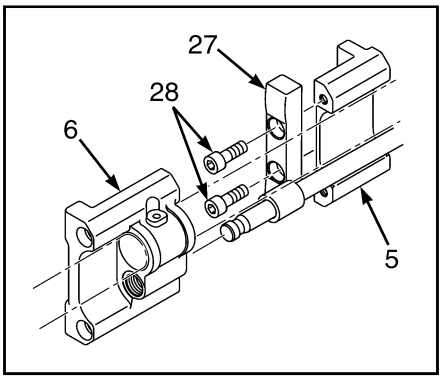

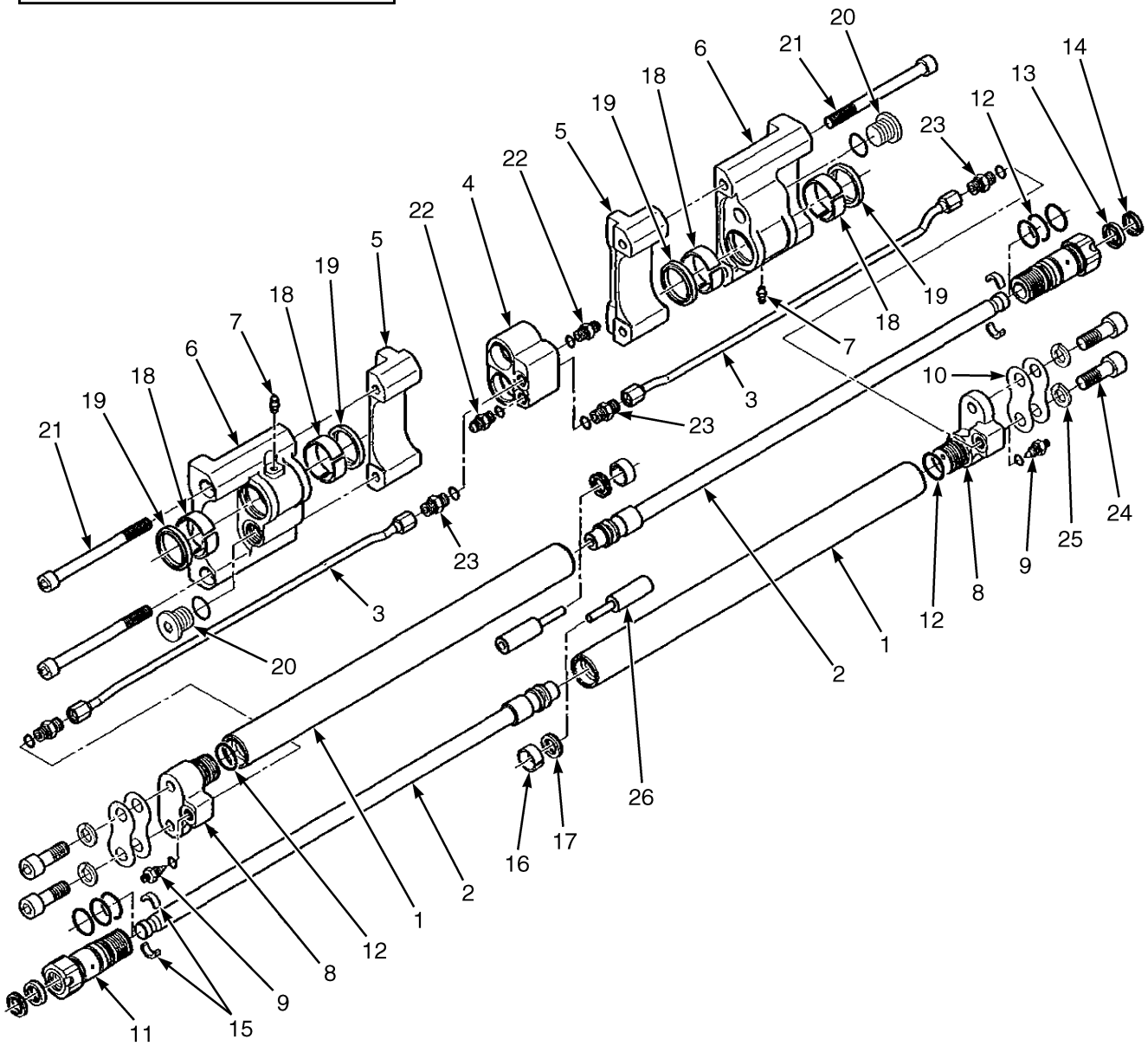

©2026 HYSTER COMPANY

FORK POSITIONER ASSEMBLY
CASCADE

KEY:
A: Class II (1067mm)
B: Class III (1067mm)
C: Class III (1220mm)

ITEM	PART NO.	DESCRIPTION	QTY A	QTY B	QTY C
	4611880	Fork Positioner Carriage (42 in.)	1	..	..
	4611882	Fork Positioner Carriage (42 in.)	..	1	..
	4694462	Fork Positioner Carriage (48in)	..	..	1
1	4329737	Cover	2	2	..
1	4279697	Cylinder (Shell)	..	..	2
2	4329738	Cylinder Rod	2	2	..
2	4279698	Cylinder Rod	..	..	2
3	4084993	Tube	2	..	..
3	4279699	Tube	..	..	2
4	. . . . .	Manifold	1	..	..
4	4217960	Manifold	..	1	1
5	. . . . .	Inner Carrier	2	..	..
5	4217961	Carrier , Inner	..	2	2
6	. . . . .	Outer Carrier	2	..	..
6	4217962	Carrier , Outer	..	2	2
7	4063703	Grease Fitting	2	2	2
8	. . . . .	End Cap	2	..	..
8	4217963	End Cap , Cylinder	..	2	2
9	4133804	Restrictor Fitting	2	2	2
10	4084991	Shim	4	4	4
11	. . . . .	Retainer	2	..	..
11	4220419	Retainer	..	2	2
11	4221073	Retainer (Optional)	..	..	2
12	4085161	O-Ring	8	8	8
13	4085162	Rod Seal	2	2	2
14	4085163	Rod Wiper	2	2	2
15	4215485	Keeper	4	4	4
16	4085164	Wear Ring	2	2	2
17	4085165	Piston Seal	2	2	2
18	4085166	Bearing	4	4	4
19	4085167	Bearing	4	4	4
20	4139422	Plug	2	2	2
21	4139423	Capscrew	4	4	4
22	4145044	Fitting	2	2	2
23	4063717	Fitting	4	4	4
24	. . . . .	Capscrew	4	..	..
24	4217964	Capscrew	..	4	4
25	4065036	Lockwasher	4	4	4
26	. . . . .	Piston Spacers	2	2	..
26	4217965	Spacer	..	..	2
27	4084441	Spacer Bar (Class II)	2	..	..
28	4058427	Capscrew (Class II)	4	..	..
	4034634	Kit-Service Cylinder	1	1	..
	4221075	Kit-Bearing - Side-shift Fork Positioner	1	1	1

©2026 HYSTER COMPANY

FORK POSITIONER ASSEMBLY
CASCADE

KEY:
A: Class II (1067mm)
B: Class III (1067mm)
C: Class III (1220mm)

ITEM	PART NO.	DESCRIPTION	QTY A	QTY B	QTY C
	4302292	Kit-Bearing - Side-shift Fork Positioner (Bronze) (Service Option)	1	1	1

See Service Manual for service procedures.
©2026 HYSTER COMPANY

NOTES

FORK POSITIONER ASSEMBLY (FIGURE 22-54)
BOLZONI

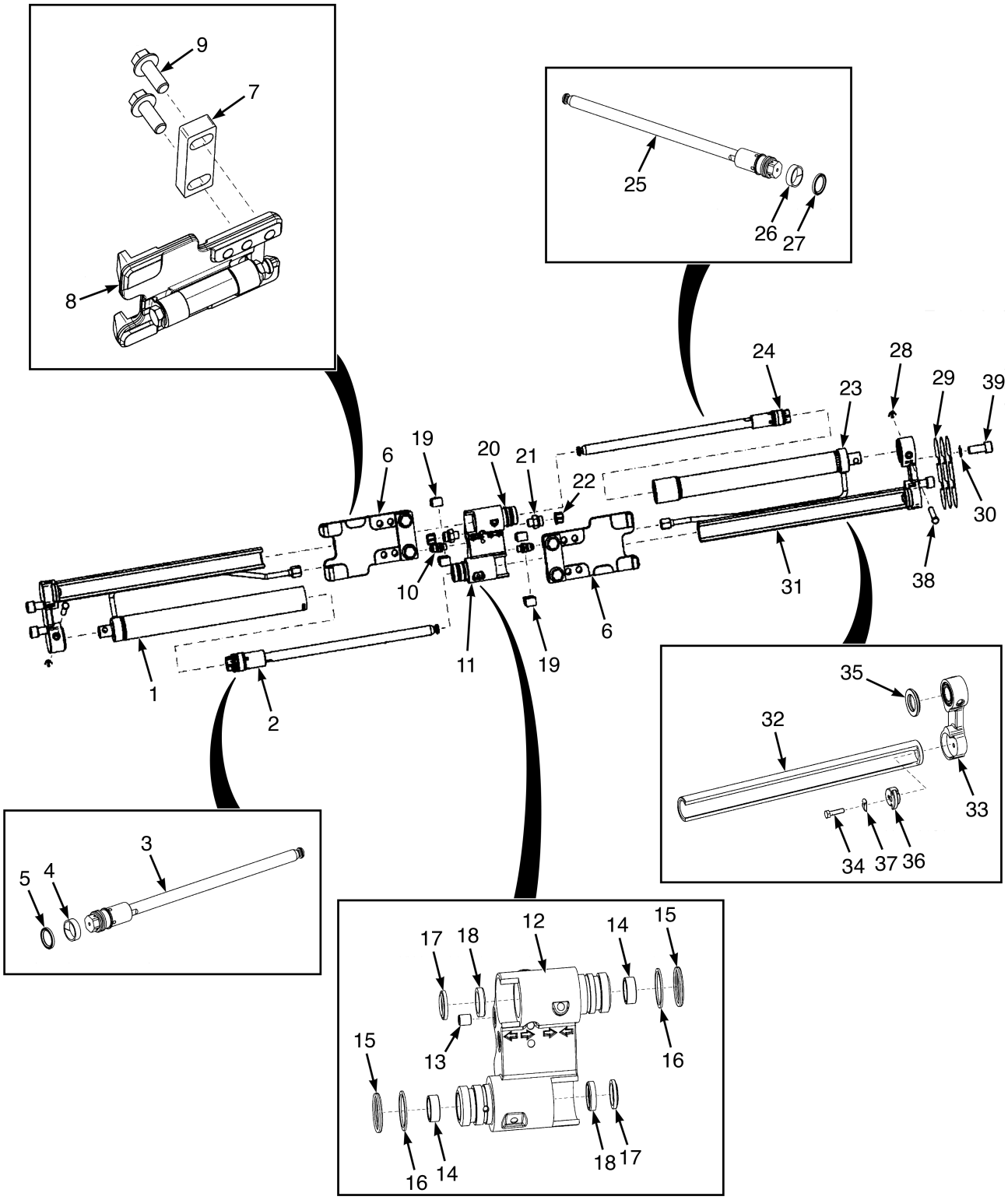

©2026 HYSTER COMPANY

FORK POSITIONER ASSEMBLY
BOLZONI

KEY:
A: (1067mm/42")
B: (1220mm/48")

ITEM	PART NO.	DESCRIPTION	QTY A	QTY B
	4722167	Fork Positioner Carriage	1	..
	4722168	Fork Positioner Carriage	..	1
1	4379110	Cylinder (Assembly) (LH)	1	..
1	4379117	Cylinder (Assembly) (LH)	..	1
2	4379108	Piston Rod (Assembly)	1	..
2	4379115	Piston Rod (Assembly)	..	1
3	. . . . .	Piston Rod	1	1
4	4379208	Seal	1	1
5	4379209	Seal	1	1
6	4379084	Support (Fork Support)	2	2
7	4271529	Stop	1	1
8	4379197	Support	1	1
9	4271532	Screw	2	2
10	4379089	Fitting	2	2
11	4379085	Valve (Assembly)	1	1
11	4381867	Kit-Seal	1	1
12	. . . . .	Valve	1	1
13	4379199	Screw	1	1
14	4379200	Bushing	2	2
15	. . . . .	Ring	2	2
16	. . . . .	Seal	2	2
17	. . . . .	Wiper	2	2
18	. . . . .	Seal	2	2
19	4379086	Coupling	4	4
20	4379083	Cap (Body Fixing)	2	2
21	4379088	Fitting	2	2
22	4379090	Cap	2	2
23	4379111	Cylinder (Assembly) (RH)	1	..
23	4379118	Cylinder (Assembly) (RH)	..	1
24	4379109	Piston Rod (Assembly)	1	..
24	4379116	Piston Rod (Assembly)	..	1
25	. . . . .	Piston Rod	1	1
26	4379206	Seal	1	1
27	4379207	Seal	1	1
28	4379087	Pin (Split)	2	2
29	4379082	Spacer	6	6
30	4202431	Washer	4	4
31	4379107	Guide (Assembly)	1	..
31	4379114	Guide (Assembly)	..	1
32	4379216	Guide	1	..
32	4379219	Guide	..	1
33	4379332	Bracket	1	1
34	4379203	Screw	1	1
35	4271394	Shock Absorber	1	1
36	4379204	Support	1	1

©2026 HYSTER COMPANY

FORK POSITIONER ASSEMBLY
BOLZONI

KEY:
A: (1067mm/42")
B: (1220mm/48")

ITEM	PART NO.	DESCRIPTION	QTY A	QTY B
37	4379205	Washer	1	1
38	4190600	Pin	2	2
39	4189684	Screw	4	4

©2026 HYSTER COMPANY

23 FIELD CONVERSION KITS

SECTION 23
FIELD CONVERSION KITS

DESCRIPTION **PAGE**

ADD-ON OPTION KITS
2LFL POWER TO CARRIAGE 23-2
3FFL POWER TO CARRIAGE 23-3
AUXILIARY EXTENSION TUBES (→ 9/2021) 23-5
ELECTRICAL 23-6
FORK POSITIONER 23-6
HYDRAULIC 23-7
LIGHTS 23-7
MAST ACCUMULATOR 23-8
MISCELLANEOUS 23-8
RADIATOR SCREEN 23-9
WEATHER PROTECTION 23-9
CONVERSION KIT
DISPLAY 23-12
DSS REMOVAL 23-13
SEATS - NON SUSPENSION TO FULL SUSPENSION 23-23
CONVERSION KITS
CARRIAGE FRAME 23-11
DIRECTION CONTROL 23-12
ENGINE COOLING - FAST FAN SPEED RATIO 23-13
HEADER HOSE - 2LFL 23-13
HEADER HOSE - 2FFL 23-16
HEADER HOSE - 3FFL 23-17
HEADER HOSE - H50A WITH 28X9 TIRES 23-19
HYDRAULIC CONTROL VALVES - ELECTRIC HYDRAULICS 23-21
HYDRAULIC CONTROL VALVES - EHYD JOYSTICK 23-21
HYDRAULIC CONTROL VALVES - EHYD MINI LEVER MODULE 23-22
HYDRAULIC CONTROL VALVES - MANUAL HYDRAULICS 23-22
PUSH BUTTON TO KEY SWITCH START 23-23
RADIATOR 23-23
STEER COLUMN 23-24
STEERING - TO SYNCHRONOUS 23-24
TRANSMISSION 23-24
WIDE TREAD AND DUAL WHEEL 23-24
REPAIR KIT
FREE LIFT HEADER HOSE - 2 AND 3 FFL 23-24
REPAIR KITS 23-25
SERVICE KITS
MAST HEIGHT SENSOR 23-25
SPECIAL SERVICE TOOLS
DRIVE AXLE 23-25

©2026 HYSTER COMPANY

ADD-ON OPTION KITS
2LFL POWER TO CARRIAGE

DESCRIPTION	PART NUMBER
Kit-Wire Harness - 2LFL W/O 3RD Function (Lift Height 1986mm)	4292335
Kit-Wire Harness - 2LFL W/O 3RD Function (Lift Height 2420 / 2228mm - 2920 / 2728mm)	4292336
Kit-Wire Harness - 2LFL W/O 3RD Function (Lift Height 3020 / 2828mm)	4292337
Kit-Wire Harness - 2LFL W/O 3RD Function (Light Height 3120 / 2928mm)	4292338
Kit-Wire Harness - 2LFL W/O 3RD Function (Lift Height 3220 / 3028mm)	4292339
Kit-Wire Harness - 2LFL W/O 3RD Function (Lift Height 3320 / 3128mm)	4292340
Kit-Wire Harness - 2LFL W/O 3RD Function (Lift Height 3420 - 3228mm)	4292341
Kit-Wire Harness - 2LFL W/O 3RD Function (Lift Height 3520 / 3328mm)	4292342
Kit-Wire Harness - 2LFL W/O 3RD Function (Lift Height 3620 / 3428mm)	4292343
Kit-Wire Harness - 2LFL W/O 3RD Function (Lift Height 3720 / 3528mm)	4292344
Kit-Wire Harness - 2LFL W/O 3RD Function (Lift Height 3860 / 3628mm)	4292345
Kit-Wire Harness - 2LFL W/O 3RD Function (Lift Height 3960 / 3728mm)	4292346
Kit-Wire Harness - 2LFL W/O 3RD Function (Lift Height 4060 / 3828mm)	4292347
Kit-Wire Harness - 2LFL W/O 3RD Function (Lift Height 4160 / 3928mm)	4292348
Kit-Wire Harness - 2LFL W/O 3RD Function (Lift Height 4260 / 4028mm)	4292349
Kit-Wire Harness - 2LFL W/O 3RD Function (Lift Height 4360 / 4128mm)	4292350
Kit-Wire Harness - 2LFL W/O 3RD Function (Lift Height 4460 / 4228mm)	4292351
Kit-Wire Harness - 2LFL W/O 3RD Function (Lift Height 4560 / 4328mm)	4292352
Kit-Wire Harness - 2LFL W/O 3RD Function (Lift Height 4660 / 4428mm)	4292353
Kit-Wire Harness - 2LFL W/O 3RD Function (Lift Height 4760 / 4528mm)	4292354
Kit-Wire Harness - 2LFL W/O 3RD Function (Lift Height 4860 / 4628mm)	4292355
Kit-Wire Harness - 2LFL W/O 3RD Function (Lift Height 4960 / 4728mm)	4292356
Kit-Wire Harness - 2LFL W/O 3RD Function (Lift Height 5060 / 4828mm)	4292357
Kit-Wire Harness - 2LFL W/O 3RD Function (Lift Height 5160 / 4928mm)	4292358
Kit-Wire Harness - 2LFL W/O 3RD Function (Lift Height 5260 / 5028mm)	4292359
Kit-Wire Harness - 2LFL W/O 3RD Function (Lift Height 5360 / 5128mm)	4292360
Kit-Wire Harness - 2LFL W/O 3RD Function (Lift Height 5460 / 5228mm)	4292361
Kit-Wire Harness - 2LFL W/O 3RD Function (Lift Height 5560 / 5328mm)	4292362
Kit-Wire Harness - 2LFL W/O 3RD Function (Lift Height 5660 / 5428mm)	4292363
Kit-Wire Harness - 2LFL W/O 3RD Function (Lift Height 5760 / 5528mm)	4292364
Kit-Wire Harness - 2LFL W/O 3RD Function (Lift Height 5860 / 5628mm)	4292365
Kit-Wire Harness - 2LFL W/O 3RD Function (Lift Height 5960 / 5728mm)	4292366
Kit-Wire Harness - 2LFL W/O 3RD Function (Lift Height 6060 / 5828mm)	4292367
Kit-Wire Harness - 2LFL W/ 3RD Function (Lift Height 1986mm)	4292368
Kit-Wire Harness - 2LFL W/ 3RD Function (Lift Height 2420 / 2228mm - 2920 / 2728mm)	4292369

©2026 HYSTER COMPANY

ADD-ON OPTION KITS
2LFL POWER TO CARRIAGE
(CONTINUED)

DESCRIPTION	PART NUMBER
Kit-Wire Harness - 2LFL W/ 3RD Function (Lift Height 3020 / 2828mm)	4292370
Kit-Wire Harness - 2LFL W/ 3RD Function (Lift Height 3120 / 2928mm)	4292371
Kit-Wire Harness - 2LFL W/ 3RD Function (Lift Height 3220 / 3028mm)	4292372
Kit-Wire Harness - 2LFL W/ 3RD Function (Lift Height 3320 / 3128mm)	4292373
Kit-Wire Harness - 2LFL W/ 3RD Function (Lift Height 3420 / 3228mm)	4292374
Kit-Wire Harness - 2LFL W/ 3RD Function (Lift Height 3520 / 3328mm)	4292375
Kit-Wire Harness - 2LFL W/ 3RD Function (Lift Height 3620 / 3428mm)	4292376
Kit-Wire Harness - 2LFL W/ 3RD Function (Lift Height 3720 / 3528mm)	4292377
Kit-Wire Harness - 2LFL W/ 3RD Function (Lift Height 3860 / 3628mm)	4292378
Kit-Wire Harness - 2LFL W/ 3RD Function (Lift Height 3960 / 3728mm)	4292379
Kit-Wire Harness - 2LFL W/ 3RD Function (Lift Height 4060 / 3828mm)	4292380
Kit-Wire Harness - 2LFL W/ 3RD Function (Lift Height 4160 / 3928mm)	4292381
Kit-Wire Harness - 2LFL W/ 3RD Function (Lift Height 4260 / 4028mm)	4292382
Kit-Wire Harness - 2LFL W/ 3RD Function (Lift Height 4360 / 4128mm)	4292383
Kit-Wire Harness - 2LFL W/ 3RD Function (Lift Height 4460 / 4228mm)	4292384
Kit-Wire Harness - 2LFL W/ 3RD Function (Lift Height 4560 / 4328mm)	4292385
Kit-Wire Harness - 2LFL W/ 3RD Function (Lift Height 4660 / 4428mm)	4292386
Kit-Wire Harness - 2LFL W/ 3RD Function (Lift Height 4760 / 4528mm)	4292387
Kit-Wire Harness - 2LFL W/ 3RD Function (Lift Height 4860 / 4628mm)	4292388
Kit-Wire Harness - 2LFL W/ 3RD Function (Lift Height 4960 / 4728mm)	4292389
Kit-Wire Harness - 2LFL W/ 3RD Function (Lift Height 5060 / 4828mm)	4292390
Kit-Wire Harness - 2LFL W/ 3RD Function (Lift Height 5160 / 4928mm)	4292391
Kit-Wire Harness - 2LFL W/ 3RD Function (Lift Height 5260 / 5028mm)	4292392
Kit-Wire Harness - 2LFL W/ 3RD Function (Lift Height 5360 / 5128mm)	4292393
Kit-Wire Harness - 2LFL W/ 3RD Function (Lift Height 5460 / 5228mm)	4292394
Kit-Wire Harness - 2LFL W/ 3RD Function (Lift Height 5560 / 5328mm)	4292395
Kit-Wire Harness - 2LFL W/ 3RD Function (Lift Height 5660 / 5428mm)	4292396
Kit-Wire Harness - 2LFL W/ 3RD Function (Lift Height 5760 / 5528mm)	4292397
Kit-Wire Harness - 2LFL W/ 3RD Function (Lift Height 5860 / 5628mm)	4292398
Kit-Wire Harness - 2LFL W/ 3RD Function (Lift Height 5960 / 5728mm)	4292399
Kit-Wire Harness - 2LFL W/ 3RD Function (Lift Height 6060 / 5828mm)	4292400

ADD-ON OPTION KITS
3FFL POWER TO CARRIAGE

ADD-ON OPTION KITS
3FFL POWER TO CARRIAGE
(CONTINUED)

DESCRIPTION	PART NUMBER
Kit-Wire Harness - 3FFL W/O 3RD Function (Lift Height 3960 / 3618mm - 4460 / 4118mm)	4287781
Kit-Wire Harness - 3FFL W/O 3RD Function (Lift Height 4610 / 4268mm)	4287782
Kit-Wire Harness - 3FFL W/O 3RD Function (Lift Height 4760 / 4418mm)	4287783
Kit-Wire Harness - 3FFL W/O 3RD Function (Lift Height 4910 / 4568mm)	4287784
Kit-Wire Harness - 3FFL W/O 3RD Function (Lift Height 5060 / 4718mm)	4287785
Kit-Wire Harness - 3FFL W/O 3RD Function (Lift Height 5210 / 4868mm)	4287786
Kit-Wire Harness - 3FFL W/O 3RD Function (Lift Height 5360 / 5018mm)	4287787
Kit-Wire Harness - 3FFL W/O 3RD Function (Lift Height 5510 / 5168mm)	4287788
Kit-Wire Harness - 3FFL W/O 3RD Function (Lift Height 5660 / 5318mm)	4287789
Kit-Wire Harness - 3FFL W/O 3RD Function (Lift Height 5810 / 5468mm)	4287790
Kit-Wire Harness - 3FFL W/O 3RD Function (Lift Height 5960 / 5618mm)	4287791
Kit-Wire Harness - 3FFL W/O 3RD Function (Lift Height 6110 / 5768mm)	4287792
Kit-Wire Harness - 3FFL W/O 3RD Function (Lift Height 6260 / 5918mm)	4287793
Kit-Wire Harness - 3FFL W/O 3RD Function (Lift Height 6410 / 6068mm)	4287794
Kit-Wire Harness - 3FFL W/O 3RD Function (Lift Height 6560 / 6218mm)	4287795
Kit-Wire Harness - 3FFL W/O 3RD Function (Lift Height 6710 / 6368mm)	4287796
Kit-Wire Harness - 3FFL W/O 3RD Function (Lift Height 6860 / 6518mm)	4287797
Kit-Wire Harness - 3FFL W/O 3RD Function (Lift Height 7010 / 6668mm)	4287798
Kit-Wire Harness - 3FFL W/O 3RD Function (Lift Height 7160 / 6818mm)	4287799
Kit-Wire Harness - 3FFL W/O 3RD Function (Lift Height 7310 / 6968mm)	4287800
Kit-Wire Harness - 3FFL W/O 3RD Function (Lift Height 7460 / 7118mm)	4287801
Kit-Wire Harness - 3FFL W/O 3RD Function (Lift Height 7610 / 7268mm)	4287802
Kit-Wire Harness - 3FFL W/O 3RD Function (Lift Height 7760 / 7418mm)	4287803
Kit-Wire Harness - 3FFL W/O 3RD Function (Lift Height 7910 / 7568mm)	4287804
Kit-Wire Harness - 3FFL W/O 3RD Function (Lift Height 8060 / 7718mm)	4287805
Kit-Wire Harness - 3FFL W/O 3RD Function (Lift Height 8210 / 7868mm)	4287806
Kit-Wire Harness - 3FFL W/O 3RD Function (Lift Height 8360 / 8018mm)	4287807
Kit-Wire Harness - 3FFL W/O 3RD Function (Lift Height 8510 / 8168mm)	4287808
Kit-Wire Harness - 3FFL W/ 3RD Function (Lift Height 3960 / 3618mm - 4460 / 4118mm)	4287753
Kit-Wire Harness - 3FFL W/ 3RD Function (Lift Height 4610 / 4268mm)	4287754
Kit-Wire Harness - 3FFL W/ 3RD Function (Lift Height 4760 / 4418mm)	4287755
Kit-Wire Harness - 3FFL W/ 3RD Function (Lift Height 4910 / 4568mm)	4287756
Kit-Wire Harness - 3FFL W/ 3RD Function (Lift Height 5060 / 4718mm)	4287757
Kit-Wire Harness - 3FFL W/ 3RD Function (Lift Height 5210 / 4868mm)	4287758

©2026 HYSTER COMPANY

ADD-ON OPTION KITS
3FFL POWER TO CARRIAGE
(CONTINUED)

DESCRIPTION	PART NUMBER
Kit-Wire Harness - 3FFL W/ 3RD Function (Lift Height 5360 / 5018mm)	4287759
Kit-Wire Harness - 3FFL W/ 3RD Function (Lift Height 5510 / 5168mm)	4287760
Kit-Wire Harness - 3FFL W/ 3RD Function (Lift Height 5660 / 5318mm)	4287761
Kit-Wire Harness - 3FFL W/ 3RD Function (Lift Height 5810 / 5468mm)	4287762
Kit-Wire Harness - 3FFL W/ 3RD Function (Lift Height 5960 / 5618mm)	4287763
Kit-Wire Harness - 3FFL W/ 3RD Function (Lift Height 6110 / 5768mm)	4287764
Kit-Wire Harness - 3FFL W/ 3RD Function (Lift Height 6260 / 5918mm)	4287765
Kit-Wire Harness - 3FFL W/ 3RD Function (Lift Height 6410 / 6068mm)	4287766
Kit-Wire Harness - 3FFL W/ 3RD Function (Lift Height 6560 / 6218mm)	4287767
Kit-Wire Harness - 3FFL W/ 3RD Function (Lift Height 6710 / 6368mm)	4287768
Kit-Wire Harness - 3FFL W/ 3RD Function (Lift Height 6860 / 6518mm)	4287769
Kit-Wire Harness - 3FFL W/ 3RD Function (Lift Height 7010 / 6668mm)	4287770
Kit-Wire Harness - 3FFL W/ 3RD Function (Lift Height 7160 / 6818mm)	4287771
Kit-Wire Harness - 3FFL W/ 3RD Function (Lift Height 7310 / 6968mm)	4287772
Kit-Wire Harness - 3FFL W/ 3RD Function (Lift Height 7460 / 7118mm)	4287773
Kit-Wire Harness - 3FFL W/ 3RD Function (Lift Height 7610 / 7268mm)	4287774
Kit-Wire Harness - 3FFL W/ 3RD Function (Lift Height 7760 / 7418mm)	4287775
Kit-Wire Harness - 3FFL W/ 3RD Function (Lift Height 7910 / 7568mm)	4287776
Kit-Wire Harness - 3FFL W/ 3RD Function (Lift Height 8060 / 7718mm)	4287777
Kit-Wire Harness - 3FFL W/ 3RD Function (Lift Height 8210 / 7868mm)	4287778
Kit-Wire Harness - 3FFL W/ 3RD Function (Lift Height 8360 / 8018mm)	4287779
Kit-Wire Harness - 3FFL W/ 3RD Function (Lift Height 8510 / 8168mm)	4287780

ADD-ON OPTION KITS
AUXILIARY EXTENSION TUBES
(→ 9/2021)

DESCRIPTION	PART NUMBER
Kit-Aux Ext Tube - Std, Class II, FFL (3 Function)	4087001
Kit-Aux Ext Tube - Std, Class II, LFL (3 Function)	4087004
Kit-Aux Ext Tube - Std, Class III, FFL (3 Function)	4087005
Kit-Aux Ext Tube - Std, Class III, LFL (3 Function)	4087006
Kit-Aux Ext Tube - Std, Class II, LFL (3 Function)	4087007
Kit-Aux Ext Tube - Std, Class II, FFL (4 Function)	4087009
Kit-Aux Ext Tube - Std, Class II, LFL (4 Function)	4087012
Kit-Aux Ext Tube - Std, Class III, FFL (4 Function)	4087013
Kit-Aux Ext Tube - Std, Class III, LFL (4 Function)	4087014

©2026 HYSTER COMPANY

ADD-ON OPTION KITS
AUXILIARY EXTENSION TUBES
(→ 9/2021)
(CONTINUED)

DESCRIPTION	PART NUMBER
Kit-Aux Ext Tube - Std, Class II, LFL (Large Tire Variant) (4 Function)	4087015
Kit-Aux Ext Tube - ISS Class II, FFL (4 Function)	4087017
Kit-Aux Ext Tube - ISS Class II, LFL (4 Function)	4087020
Kit-Aux Ext Tube - ISS Class III, FFL (4 Function)	4087021
Kit-Aux Ext Tube - ISS Class III, LFL (4 Function)	4087022
Kit-Aux Ext Tube - ISS, Class II, LFL (Large Tire Variant) (4 Function)	4087023

ADD-ON OPTION KITS
ELECTRICAL

DESCRIPTION	PART NUMBER
Kit (Rear Audible Alarm) (H40)	**a**4355330
Kit (Rear Audible Alarm) (H50)	**a**4355331
Kit (Rear Audible Alarm) (H55-60)	**a**4355332
Kit (Rear Audible Alarm) (H70)	**a**4355333
Kit (Powertrain Protection)	**a**4355395
Kit (Premium Monitoring)	**b**4355396
Kit-Lever - Turn signal w/ harness	**c**4365087
Kit-Controller - Ibox	**c**4365089
Kit-Switch - Hazard Light, Rocker	**c**4365733
Kit-12V Power Outlet (USB)	4359854
Kit - Audible Alarm	4367745
Kit (Front Screen and Wiper)	81016592

FOOTNOTES:
a Base, Mid or Full Electrical Configuration
b Mid and Full Electrical Configuration
c Requires "Mid" Electrical content minimum.

ADD-ON OPTION KITS
FORK POSITIONER

DESCRIPTION	PART NUMBER
Kit-Fork Positioner - ISS, Class II, 907mm, FFL	4330115
Kit-Fork Positioner - ISS, Class II, 977mm, FFL	4330116
Kit-Fork Positioner - ISS, Class II, 1067mm, FFL	4330117
Kit-Fork Positioner - ISS, Class III, 1067mm, FFL	4330118
Kit-Fork Positioner - ISS, Class III, 977mm, FFL	4330119

©2026 HYSTER COMPANY

ADD-ON OPTION KITS
FORK POSITIONER
(CONTINUED)

DESCRIPTION	PART NUMBER
Kit-Fork Positioner - ISS, Class III, 1220mm, FFL	4330120
Kit-Fork Positioner - ISS, Class II, 907mm, LFL	4330129
Kit-Fork Positioner - ISS, Class II, 977mm, LFL, (1-2.0T)	4330130
Kit-Fork Positioner - ISS, Class II, 977mm, LFL	4330131
Kit-Fork Positioner - ISS, Class II, 977mm, LFL, (2.5T)	4330132
Kit-Fork Positioner - ISS, Class III, 977mm, LFL	4330133
Kit-Fork Positioner - ISS, Class III, 1067mm, LFL	4330134
Kit-Fork Positioner - ISS, Class III, 1219mm, LFL	4330135

ADD-ON OPTION KITS
HYDRAULIC

DESCRIPTION	PART NUMBER
Kit - Load Weight (Option only available on mid and full option chassis harness trucks)	4344223

ADD-ON OPTION KITS
LIGHTS

DESCRIPTION	PART NUMBER
Kit-Worklight - Front LED w/ Marker	4359580
Kit-Worklight - Front LED w/ Marker (1100 Lumens)	4359581
Kit-Brake/Tail/Back-UP Light - Turn and Hazard w/o Heater/Ventilation/Air Conditioner (HVAC)	4360149
Kit-Worklight (Front LED)	4359575
Kit-Worklight (Front LED, 1100)	4359576
Kit-Worklight (Front Halogen)	4359578
Kit-Light (Front Spot Light, Blue)	4359583
Kit-Light (Front Spot Light, Red)	4359584
Kit-Worklight (Rear LED)	4359586
Kit-Worklight (Rear LED, 1100)	4359587
Kit-Worklight (Rear Halogen)	4359589
Kit-Light (Warning Light, Red, LH and RH) No rear light included.	4359591
Kit-Light (Warning Light, Red, LH and RH and Rear)	4359593
Kit-Light (Rear Spotlight, Blue)	4359595
Kit-Light (Rear Spotlight, Red)	4359596
Kit-Strobe Light	4359598
Kit-Worklight (Rear LED w/ Heater/Ventilation/Air Conditioner (HVAC)	4360151

©2026 HYSTER COMPANY

ADD-ON OPTION KITS
LIGHTS
(CONTINUED)

DESCRIPTION	PART NUMBER
Kit-Worklight (Rear LED, 1100, w/ Heater/Ventilation/Air Conditioner (HVAC)	4360152
Kit-Worklight (Rear Halogen w/ Heater/Ventilation/Air Conditioner (HVAC)	4360154
Kit-Light (Spotlight, Rear Halogen, Blue, w/ Heater/Ventilation/Air Conditioner (HVAC)	4360156
Kit-Light (Spotlight, Rear Halogen, Red, w/ Heater/Ventilation/Air Conditioner (HVAC)	4360157
Kit-Strobe Light (w/ Heater/Ventilation/Air Conditioner (HVAC)	4360159
Kit-Brake/Tail/Back-UP Light - Turn and Hazard w/ Heater/Ventilation/Air Conditioner (HVAC)	4360161
Kit-Light (LH, RH and Rear Red Warning Light w/ Heater/Ventilation/Air Conditioner (HVAC)	4360163
Kit-Worklight (Mast Mounted, 2 Low)	4370813
Kit-Worklight (Mast Mounted, 2 High)	4370815
Kit-Worklight (Mast Mounted, 4 Lights)	4370817
Kit-Conversion - Front Work Light to Front Work Light with Turn Signal	4384669
Kit-Conversion - Front Work Light to Front Work Light with Turn Signal (1100)	4384670
Kit-Bracket (Rear Multi-light Mount)	4359852
Kit-Conversion (No Lights to Front and Rear w/ Turn)	**a**4391093
Kit-Conversion (No Lights to Front w/ Turn 1100 lumens)	**a**4391094
Kit-Light (Harness, OHG, Front)	4368420
Kit-Light (Harness, OHG, Rear, Mid)	4368422
Kit-Conversion (For trucks with RR Light w/ Reflector to Tail Light)	81024324
Kit-Conversion (For trucks with no RR Light w/ Reflectors to Tail Light)	81024198

FOOTNOTES:
a Kit requires software that must be dealer installed.

ADD-ON OPTION KITS
MAST ACCUMULATOR

DESCRIPTION	PART NUMBER
Kit-Accumulator - Mast Accumulator (2-3.5T)	4087126

ADD-ON OPTION KITS
MISCELLANEOUS

DESCRIPTION	PART NUMBER
Kit-Heater - 2.2L LPG/GAS, 120V Block Heater	4326046
Kit-Heater - 2.6L/3.0L/3.3L Diesel, 120v	4326045

©2026 HYSTER COMPANY

ADD-ON OPTION KITS
MISCELLANEOUS
(CONTINUED)

DESCRIPTION	PART NUMBER
Kit-Heater - 2.1L Dsl, Block Heater, 120v	4326044
Kit - RTST Add-on	4330018
Kit-Seat Belt (Sequential Interlock)	4383084
Kit - Dual Mirror (Rect OHG)	4367744
Kit (OHG Support Wldmt)	81004422
Kit - Radiator (Std to Combi Cooler)	81015174

ADD-ON OPTION KITS
RADIATOR SCREEN

DESCRIPTION	PART NUMBER
Kit-Radiator Screen (2.2L,2.1L DSL W/O CAC, IDI DSL)	4359561
Kit-Radiator Screen (2.1L DSL W/CAC OR HST XMSN)	4359562

ADD-ON OPTION KITS
WEATHER PROTECTION

DESCRIPTION	PART NUMBER
Kit-Top Screen (Glass Only) (Fig8 OHG)	4324806
Kit-Wiper (Top Screen) (Fig8 OHG)	4324808
Kit-Front Screen (Fig8 OHG)	4324810
Kit-Front Screen (Heated) (Fig8 OHG)	4324812
Kit-Front Screen (Accessory mounting hardware, upper left) (Fig8 OHG)	4324814
Kit-Front Screen (Accessory mounting hardware, upper right) (Fig8 OHG)	4324816
Kit-Front Screen (Accessory mounting hardware, bottom) (Fig8 OHG)	4324818
Kit-Window Washer (Front) (Fig8 OHG)	4324820
Kit-Rear Screen (Fig8 OHG)	4324822
Kit-Window Washer (Rear Top) (Fig8 OHG)	4324824
Kit-Door (PVC) (Fig8 OHG)	4324826
Kit-Door (Steel) (Fig8 OHG)	4324828
Kit - Glass (Top sun shade) (Fig8 OHG)	4329052
Kit - Front sun shade (w/ Cab) (Fig8 OHG)	4329054
Kit - Top and Front sun shade (w/ Cab) (Fig8 OHG)	4329056
Kit-Rear Screen (Restriction) (Fig8 OHG)	4332471
Kit-Plug (w/o Top Wiper) (Fig8 OHG)	4332479
Kit-Window Washer (Rear/Top) (Fig8 OHG)	4339646
Kit-Window Washer (Front) (Fig8 OHG)	4339648

©2026 HYSTER COMPANY

ADD-ON OPTION KITS
WEATHER PROTECTION
(CONTINUED)

DESCRIPTION	PART NUMBER
Kit - High Spec Cab (Fig8 OHG)	4353431
Kit-Heater	4324830
Kit-Hose (Heater, Yanmar 2.1L Dsl)	4324832
Kit-Hose (Heater, Yanmar 2.2L LPG)	4324834
Kit-Hose (Heater, Yanmar 3.0L and 3.3L Dsl)	4324836
Kit-Heater - with A/C (Yanmar 2.1L Dsl)	4326398
Kit-Heater - with A/C (Yanmar 2.2L LPG)	4326400
Kit-Cab Heater - with A/C (Yanmar 3.0L and 3.3L Dsl)	4326728
Kit - Cap, (Front washer bottle)	4324838
Kit-Cover (Polyccarbonate) (Rect OHG)	4326396
Kit-Compressor - A/C, Yanmar 2.1L Dsl and 2.2L LPG	4326730
Kit-Compressor - A/C, Yanmar 3.0 and 3.3lL Dsl	4326732
Kit-Wire Harness - Retention (OHG)	4332477
Kit-Wire Harness (Rear OHG)	4333002
Kit-Wire Harness (Cab)	4333004
Kit-Wire Harness - Cab (Powershift Transmission)	4333006
Kit-Switch (Dome Light and Switch)	4333008
Kit-Switch (6 Bank Control Module)	4338276
Kit-Light - Switch (Front and Rear Work Light)	4338277
Kit-Light (Switch Blank, front and rear)	4338278
Kit-Light - Switch (Mast mounted work light)	4338279
Kit-Light - Switch (Laser Fork Lighting)	4338281
Kit-Light - Switch Blank (Laser Fork Lighting)	4338282
Kit-Light - Hazard Warning Rocker Blank (Laser Fork Lighting)	4338283
Kit-Light - Switch Blank (Hazard Warning Light)	4338284
Kit-Switch (Bi-Fuel)	4338285
Kit-Switch - Blank (Bi-Fuel)	4338286
Kit-Switch (Reversing Fan)	4338287
Kit-Switch - Blank (Reversing Fan)	4338288
Kit-Switch - Headliner (6 Bank Control Module)	4338289
Kit-Switch (Front Wiper)	4338290
Kit-Switch - Blank (Front Wiper/Washer Switch)	4338291
Kit-Switch (Top Wiper/Washer)	4338292
Kit-Switch - Blank (Top Wiper/Washer)	4338293
Kit-Switch (Rear Wiper/Washer)	4338294

©2026 HYSTER COMPANY

ADD-ON OPTION KITS
WEATHER PROTECTION
(CONTINUED)

DESCRIPTION	PART NUMBER
Kit-Switch - Blank (Rear Wiper/Washer)	4338295
Kit-Switch (Heated Front Screen)	4338296
Kit-Switch - Blank (Heated Front Screen)	4338297
Kit-Switch - Blank (Heated Rear Screen)	4338298
Kit-Switch - Rocker (Heated Rear Screen)	4338299
Kit-Switch (Dash Panel, Blank) (wo/ switch)	4338300
Kit-Switch (Dash Panel, Blank) (w/ switch)	4338301
Kit-Switch (Dash Panel, Blank) (w/ Hazard switch)	4338302
Kit-Switch (Dash Panel, Blank) (w/Hazard Work Light)	4338303
Kit-Tail Light (Cover)	4332927
Kit-Seal (Foam, brake actuation, dry brake)	4332929
Kit-Seal (Foam, brake actuation, HST E-brake pedal)	4332931
Kit-Seal (Cab Seals)	4332933
Kit-Seal (Dual Throttle)	4332935
Kit-Label (A/C Refrigerant)	4333408
Kit-Label (Rear Screen Operation)	4333410
Kit - Headliner (w/ cab, w/ rear screen)	4333415
Kit - Headliner (w/ cab, w/o rear screen)	4354902
Kit - Fire Extinguisher (Cowl Mounted w/ OAS)	4332473
Kit - Fire Extinguisher (Cowl Mounted w/o OAS)	4345000
Kit-Fan (w/ Cab)	**a**4332475
Kit - Floorplate (Dual Pedal w/ HVAC)	4354863
Kit - Kick Panel (Manual Park Brake)	4354853
Kit - Floorplate (Std Monotrol w/ HVAC)	4354855
Kit - Kick Panel (E-Park Brake w/ HVAC)	4354886
Kit - Kick Panel (Dual Throttle w/ HVAC)	4354898

FOOTNOTES:

a Depending on your trucks configuration, this kit may require additional electrical harness or other upgrades. Check with your dealer or Hyster representative.

CONVERSION KITS
CARRIAGE FRAME

DESCRIPTION	PART NUMBER
Kit - Carriage Frame Lube Fittings	4362282
Kit - Carriage Frame Lube Fittings	4362283
Kit - Carriage Frame Lube Fittings	4362284

CONVERSION KITS
CARRIAGE FRAME
(CONTINUED)

DESCRIPTION	PART NUMBER
Kit - Carriage Frame Lube Fittings	4362285

CONVERSION KITS
DIRECTION CONTROL

DESCRIPTION	PART NUMBER
Kit-Conversion (Dir Lever to Dir Control Switch) (4F w/ DCS)	4370571
Kit-Conversion (Dir Lever to Dir Control Switch) (3F w/ DCS)	4371054
Kit-Conversion (Dir Lever to Dir Control Switch) (3F w/ Clamp DCS)	4371055
Kit-Conversion (Dir Lever to Dir Control Switch) (4F w/ Clamp DCS)	4371056
Kit-Conversion (Dir Lever to Dir Control Switch) (3F w/ RTST DCS)	4371057
Kit-Conversion (Dir Lever to Dir Control Switch) (4F w/ RTST DCS)	4371058
Kit-Conversion (Dir Lever to Dir Control Switch) (3F w/ Clamp RTST DCS)	4371059
Kit-Conversion (Dir Lever to Dir Control Switch) (4F w/ Clamp RTST DCS)	4371060
Kit-Monotrol TO Fwd/Rev Switch (4F)	4370568
Kit-Monotrol TO Fwd/Rev Switch (3F)	4371423
Kit-Monotrol TO Fwd/Rev Switch (3F w/ Clamp)	4371424
Kit-Monotrol TO Fwd/Rev Switch (4F w/ Clamp)	4371425
Kit-Monotrol TO Fwd/Rev Switch (3F w/ RTST)	4371426
Kit-Monotrol TO Fwd/Rev Switch (4F w/ RTST)	4371427
Kit-Monotrol TO Fwd/Rev Switch (3F w/ Clamp RTST)	4371428
Kit-Monotrol TO Fwd/Rev Lever (4F w/ Clamp RTST)	4371429
Kit-Fwd/Rev Switch TO Monotrol	4371862
Kit-Conversion (Fwd/Rev Switch to Lever)	4371956
Kit - Monotrol to Fed/Rev Lever	4369324
Kit - Fwd/Rev Lever to Monotrol	4369326

CONVERSION KIT
DISPLAY

DESCRIPTION	PART NUMBER
Kit (Display, 7in (178mm) to 2.8in (71mm))	**a**4395653
Kit-Conversion (Display, 2.8in (71mm) to 5in (127mm))	81015180

©2026 HYSTER COMPANY

FOOTNOTES:
a Kit requires software that must be dealer installed.

CONVERSION KIT
DSS REMOVAL

DESCRIPTION	PART NUMBER
Kit - DSS Removal	**a**81068151

FOOTNOTES:
a Kit requires software that must be dealer installed.

CONVERSION KITS
ENGINE COOLING
FAST FAN SPEED RATIO

DESCRIPTION	PART NUMBER
Kit-Conversion (Fast Fan - Cert 2.2L LPG or BiFuel)	4396598
Kit-Conversion (Fast Fan - Non Cert 2.2L LPG or BiFuel)	4396599
Kit-Conversion (Fast Fan - 2.1L w/ DOC)	4399703

CONVERSION KITS
HEADER HOSE
2LFL

DESCRIPTION	PART NUMBER
Kit-Hose Group 2 TO 3 Way (Lift Height 2420 / 2228 - 2920 / 2728mm)	4283924
Kit-Hose Group 2 TO 3 Way (Lift Height 3020 / 2828mm)	4283925
Kit-Hose Group 2 TO 3 Way (Lift Height 3120 / 2928mm)	4283926
Kit-Hose Group 2 TO 3 Way (Lift Height 3220 / 3028mm)	4283927
Kit-Hose Group 2 TO 3 Way (Lift Height 3320 / 3128mm)	4283928
Kit-Hose Group 2 TO 3 Way (Lift Height 3420 / 3228mm)	4283929
Kit-Hose Group 2 TO 3 Way (Lift Height 3520 / 3328mm)	4283930
Kit-Hose Group 2 TO 3 Way (Lift Height 3620 / 3428mm)	4283931
Kit-Hose Group 2 TO 3 Way (Lift Height 3720 / 3528mm)	4283932
Kit-Hose Group 2 TO 3 Way (Lift Height 3860 / 3628mm)	4283933
Kit-Hose Group 2 TO 3 Way (Lift Height 3960 / 3728mm)	4283934
Kit-Hose Group 2 TO 3 Way (Lift Height 4060 / 3828mm)	4283935
Kit-Hose Group 2 TO 3 Way (Lift Height 4160 / 3928mm)	4283936
Kit-Hose Group 2 TO 3 Way (Lift Height 4260 / 4028mm)	4283937
Kit-Hose Group 2 TO 3 Way (Lift Height 4360 / 4128mm)	4283938
Kit-Hose Group 2 TO 3 Way (Lift Height 4460 / 4228mm)	4283939
Kit-Hose Group 2 TO 3 Way (Lift Height 4560 / 4328mm)	4283940
Kit-Hose Group 2 TO 3 Way (Lift Height 4660 / 4428mm)	4283941

©2026 HYSTER COMPANY

CONVERSION KITS
HEADER HOSE
2LFL
(CONTINUED)

DESCRIPTION	PART NUMBER
Kit-Hose Group 2 TO 3 Way (Lift Height 4760 / 4528mm)	4283942
Kit-Hose Group 2 TO 3 Way (Lift Height 4860 / 4628mm)	4283943
Kit-Hose Group 2 TO 3 Way (Lift Height 4960 / 4728mm)	4283944
Kit-Hose Group 2 TO 3 Way (Lift Height 5060 / 4828mm)	4283945
Kit-Hose Group 2 TO 3 Way (Lift Height 5160 / 4928mm)	4283946
Kit-Hose Group 2 TO 3 Way (Lift Height 5260 / 5028mm)	4283947
Kit-Hose Group 2 TO 3 Way (Lift Height 5360 / 5128mm)	4283948
Kit-Hose Group 2 TO 3 Way (Lift Height 5460 / 5228mm)	4283949
Kit-Hose Group 2 TO 3 Way (Lift Height 5560 / 5328mm)	4283950
Kit-Hose Group 2 TO 3 Way (Lift Height 5660 / 5428mm)	4283951
Kit-Hose Group 2 TO 3 Way (Lift Height 5760 / 5528mm)	4283952
Kit-Hose Group 2 TO 3 Way (Lift Height 5860 / 5628mm)	4283953
Kit-Hose Group 2 TO 3 Way (Lift Height 5960 / 5628mm)	4283954
Kit-Hose Group 2 TO 3 Way (Lift Height 6060 / 5828mm)	4283955
Kit-Hose Group 3 TO 4 Way (Lift Height 2420 / 2228 - 2920 / 2728mm)	4283990
Kit-Hose Group 3 TO 4 Way (Lift Height 3020 / 2828mm)	4283991
Kit-Hose Group 3 TO 4 Way (Lift Height 3120 / 2928mm)	4283992
Kit-Hose Group 3 TO 4 Way (Lift Height 3220 / 3028mm)	4283993
Kit-Hose Group 3 TO 4 Way (Lift Height 3320 / 3128mm)	4283994
Kit-Hose Group 3 TO 4 Way (Lift Height 3420 / 3228mm)	4283995
Kit-Hose Group 3 TO 4 Way (Lift Height 3520 / 3328mm)	4283996
Kit-Hose Group 3 TO 4 Way (Lift Height 3620 / 3428mm)	4283997
Kit-Hose Group 3 TO 4 Way (Lift Height 3720 / 3528mm)	4283998
Kit-Hose Group 3 TO 4 Way (Lift Height 3860 / 3628mm)	4283999
Kit-Hose Group 3 TO 4 Way (Lift Height 3960 / 3728mm)	4284000
Kit-Hose Group 3 TO 4 Way (Lift Height 4060 / 3828mm)	4284001
Kit-Hose Group 3 TO 4 Way (Lift Height 4160 / 3928mm)	4284002
Kit-Hose Group 3 TO 4 Way (Lift Height 4260 / 4028mm)	4284003
Kit-Hose Group 3 TO 4 Way (Lift Height 4360 / 4128mm)	4284004
Kit-Hose Group 3 TO 4 Way (Lift Height 4460 / 4228mm)	4284005
Kit-Hose Group 3 TO 4 Way (Lift Height 4560 / 4328mm)	4284006
Kit-Hose Group 3 TO 4 Way (Lift Height 4660 / 4428mm)	4284007
Kit-Hose Group 3 TO 4 Way (Lift Height 4760 / 4528mm)	4284008
Kit-Hose Group 3 TO 4 Way (Lift Height 4860 / 4628mm)	4284009
Kit-Hose Group 3 TO 4 Way (Lift Height 4960 / 4728mm)	4284010

©2026 HYSTER COMPANY

CONVERSION KITS
HEADER HOSE
2LFL
(CONTINUED)

DESCRIPTION	PART NUMBER
Kit-Hose Group 3 TO 4 Way (Lift Height 5060 / 4828mm)	4284011
Kit-Hose Group 3 TO 4 Way (Lift Height 5160 / 4928mm)	4284012
Kit-Hose Group 3 TO 4 Way (Lift Height 5260 / 5028mm)	4284013
Kit-Hose Group 3 TO 4 Way (Lift Height 5360 / 5128mm)	4284014
Kit-Hose Group 3 TO 4 Way (Lift Height 5460 / 5228mm)	4284015
Kit-Hose Group 3 TO 4 Way (Lift Height 5560 / 5328mm)	4284016
Kit-Hose Group 3 TO 4 Way (Lift Height 5660 / 5428mm)	4284017
Kit-Hose Group 3 TO 4 Way (Lift Height 5760 / 5528mm)	4284018
Kit-Hose Group 3 TO 4 Way (Lift Height 5860 / 5628mm)	4284019
Kit-Hose Group 3 TO 4 Way (Lift Height 5960 / 5728mm)	4284020
Kit-Hose Group 3 TO 4 Way (Lift Height 6060 / 5828mm)	4284021
Kit-Hose Group 2 TO 4 Way (Lift Height 2420 / 2228 - 2920 / 2728mm)	4283957
Kit-Hose Group 2 TO 4 Way (Lift Height 3020 / 2828mm)	4283958
Kit-Hose Group 2 TO 4 Way (Lift Height 3120 / 2928mm)	4283959
Kit-Hose Group 2 TO 4 Way (Lift Height 3220 / 3028mm)	4283960
Kit-Hose Group 2 TO 4 Way (Lift Height 3320 / 3128mm)	4283961
Kit-Hose Group 2 TO 4 Way (Lift Height 3420 / 3228mm)	4283962
Kit-Hose Group 2 TO 4 Way (Lift Height 3520 / 3328mm)	4283963
Kit-Hose Group 2 TO 4 Way (Lift Height 3620 / 3428mm)	4283964
Kit-Hose Group 2 TO 4 Way (Lift Height 3720 / 3528mm)	4283965
Kit-Hose Group 2 TO 4 Way (Lift Height 3860 / 3628mm)	4283966
Kit-Hose Group 2 TO 4 Way (Lift Height 3960 / 3728mm)	4283967
Kit-Hose Group 2 TO 4 Way (Lift Height 4060 / 3828mm)	4283968
Kit-Hose Group 2 TO 4 Way (Lift Height 4160 / 3928mm)	4283969
Kit-Hose Group 2 TO 4 Way (Lift Height 4260 / 4028mm)	4283970
Kit-Hose Group 2 TO 4 Way (Lift Height 4360 / 4128mm)	4283971
Kit-Hose Group 2 TO 4 Way (Lift Height 4460 / 4228mm)	4283972
Kit-Hose Group 2 TO 4 Way (Lift Height 4560 / 4328mm)	4283973
Kit-Hose Group 2 TO 4 Way (Lift Height 4660 / 4428mm)	4283974
Kit-Hose Group 2 TO 4 Way (Lift Height 4760 / 4528mm)	4283975
Kit-Hose Group 2 TO 4 Way (Lift Height 4860 / 4628mm)	4283976
Kit-Hose Group 2 TO 4 Way (Lift Height 4960 / 4728mm)	4283977
Kit-Hose Group 2 TO 4 Way (Lift Height 5060 / 4828mm)	4283978
Kit-Hose Group 2 TO 4 Way (Lift Height 5160 / 4928mm)	4283979
Kit-Hose Group 2 TO 4 Way (Lift Height 5260 / 5028mm)	4283980

©2026 HYSTER COMPANY

CONVERSION KITS
HEADER HOSE
2LFL
(CONTINUED)

DESCRIPTION	PART NUMBER
Kit-Hose Group 2 TO 4 Way (Lift Height 5360 / 5128mm)	4283981
Kit-Hose Group 2 TO 4 Way (Lift Height 5460 / 5228mm)	4283982
Kit-Hose Group 2 TO 4 Way (Lift Height 5560 / 5328mm)	4283983
Kit-Hose Group 2 TO 4 Way (Lift Height 5660 / 5428mm)	4283984
Kit-Hose Group 2 TO 4 Way (Lift Height 5760 / 5528mm)	4283985
Kit-Hose Group 2 TO 4 Way (Lift Height 5860 / 5628mm)	4283986
Kit-Hose Group 2 TO 4 Way (Lift Height 5960 / 5728mm)	4283987
Kit-Hose Group 2 TO 4 Way (Lift Height 6060 / 5828mm)	4283988

CONVERSION KITS
HEADER HOSE
2FFL

DESCRIPTION	PART NUMBER
Kit-Hose Group 2 TO 3 Way (LH 3200/ 3054mm)	4283363
Kit-Hose Group 2 TO 3 Way (LH 3300/ 3154mm)	4283364
Kit-Hose Group 2 TO 3 Way (LH 3400/ 3254mm)	4283365
Kit-Hose Group 2 TO 3 Way (LH 3500/ 3354mm)	4283366
Kit-Hose Group 2 TO 3 Way (LH 3600/ 3454mm)	4283367
Kit-Hose Group 2 TO 3 Way (LH 3700/ 3554mm)	4283368
Kit-Hose Group 2 TO 3 Way (LH 3800/ 3654mm)	4283369
Kit-Hose Group 2 TO 3 Way (LH 4020/ 3854mm)	4283370
Kit-Hose Group 2 TO 3 Way (LH 4520/ 4354mm)	4283375
Kit-Hose Group 2 TO 3 Way (LH 4920/ 4754mm)	4283379
Kit-Hose Group 2 TO 3 Way (LH 5520/ 5354mm)	4283384
Kit-Hose Group 2 TO 4 Way (LH 3200/ 3054mm)	4283387
Kit-Hose Group 2 TO 4 Way (LH 3300/ 3154mm)	4283388
Kit-Hose Group 2 TO 4 Way (LH 3400/ 3254mm)	4283389
Kit-Hose Group 2 TO 4 Way (LH 3500/ 3354mm)	4283390
Kit-Hose Group 2 TO 4 Way (LH 3600/ 3454mm)	4283391
Kit-Hose Group 2 TO 4 Way (LH 3700/ 3554mm)	4283392
Kit-Hose Group 2 TO 4 Way (LH 3800/ 3654mm)	4283393
Kit-Hose Group 2 TO 4 Way (LH 4020/ 3854mm)	4283394
Kit-Hose Group 2 TO 4 Way (LH 4520/ 4354mm)	4283399
Kit-Hose Group 2 TO 4 Way (LH 4920/ 4754mm)	4283403
Kit-Hose Group 2 TO 4 Way (LH 5520/ 5354mm)	4283408

©2026 HYSTER COMPANY

CONVERSION KITS
HEADER HOSE
2FFL
(CONTINUED)

DESCRIPTION	PART NUMBER
Kit-Hose Group 3 TO 4 Way (LH 3200/ 3054mm)	4283411
Kit-Hose Group 3 TO 4 Way (LH 3300/ 3154mm)	4283412
Kit-Hose Group 3 TO 4 Way (LH 3400/ 3254mm)	4283413
Kit-Hose Group 3 TO 4 Way (LH 3500/ 3354mm)	4283414
Kit-Hose Group 3 TO 4 Way (LH 3600/ 3454mm)	4283415
Kit-Hose Group 3 TO 4 Way (LH 3700/ 3554mm)	4283416
Kit-Hose Group 3 TO 4 Way (LH 3800/ 3654mm)	4283417
Kit-Hose Group 3 TO 4 Way (LH 4020/ 3854mm)	4283418
Kit-Hose Group 3 TO 4 Way (LH 4520/ 4354mm)	4283423
Kit-Hose Group 3 TO 4 Way (LH 4920/ 4754mm)	4283427
Kit-Hose Group 3 TO 4 Way (LH 5520/ 5354mm)	4283432
Kit-Attaching Parts (2FFL, F509/564), 2 to 3 Way	4283355
Kit-Attaching Parts (2FFL, F509/564), 3 to 4 Way	4283357
Kit-Attaching Parts (2FFL, F509/564),4F Free Lift Tube	4283359
Kit-Attaching Parts (2FFL, F509/564),3F Free Lift Tube	4283358

CONVERSION KITS
HEADER HOSE
3FFL

DESCRIPTION	PART NUMBER
Kit-Hose Group 2 TO 3 Way (Lift Height 3960/3618 - 4460/4118)	4281791
Kit-Hose Group 2 TO 3 Way (Lift Height 4610 / 4268mm)	4281792
Kit-Hose Group 2 TO 3 Way (Lift Height 4760 / 4418mm)	4281793
Kit-Hose Group 2 TO 3 Way (Lift Height 4910 / 4568mm)	4281794
Kit-Hose Group 2 TO 3 Way (Lift Height 5060 / 4718mm)	4281795
Kit-Hose Group 2 TO 3 Way (Lift Height 5210 / 4868mm)	4281796
Kit-Hose Group 2 TO 3 Way (Lift Height 5360 / 5018mm)	4281797
Kit-Hose Group 2 TO 3 Way (Lift Height 5510 / 5168mm)	4281798
Kit-Hose Group 2 TO 3 Way (Lift Height 5660 / 5318mm)	4281799
Kit-Hose Group 2 TO 3 Way (Lift Height 5810 / 5468mm)	4281800
Kit-Hose Group 2 TO 3 Way (Lift Height 5960 / 5618mm)	4281801
Kit-Hose Group 2 TO 3 Way (Lift Height 6110 / 5768mm)	4281802
Kit-Hose Group 2 TO 3 Way (Lift Height 6260 / 5918mm)	4281803
Kit-Hose Group 2 TO 3 Way (Lift Height 6410 / 6068mm)	4281804
Kit-Hose Group 2 TO 3 Way (Lift Height 6560 / 6218mm)	4281805

©2026 HYSTER COMPANY

CONVERSION KITS
HEADER HOSE
3FFL
(CONTINUED)

DESCRIPTION	PART NUMBER
Kit-Hose Group 2 TO 3 Way (Lift Height 6710 / 6368mm)	4281806
Kit-Hose Group 2 TO 3 Way (Lift Height 6860 / 6518mm)	4281807
Kit-Hose Group 2 TO 3 Way (Lift Height 7010 / 6668mm)	4281808
Kit-Hose Group 2 TO 3 Way (Lift Height 7160 / 6818mm)	4281809
Kit-Hose Group 2 TO 3 Way (Lift Height 7310 / 6968mm)	4281810
Kit-Hose Group 2 TO 4 Way (Lift Height 3960/3618 - 4460/4118)	4281821
Kit-Hose Group 2 TO 4 Way (Lift Height 4610 / 4268mm)	4281822
Kit-Hose Group 2 TO 4 Way (Lift Height 4760 / 4418mm)	4281823
Kit-Hose Group 2 TO 4 Way (Lift Height 4910 / 4568mm)	4281824
Kit-Hose Group 2 TO 4 Way (Lift Height 5060 / 4718mm)	4281825
Kit-Hose Group 2 TO 4 Way (Lift Height 5210 / 4868mm)	4281826
Kit-Hose Group 2 TO 4 Way (Lift Height 5360 / 5018mm)	4281827
Kit-Hose Group 2 TO 4 Way (Lift Height 5510 / 5168mm)	4281828
Kit-Hose Group 2 TO 4 Way (Lift Height 5660 / 5318mm)	4281829
Kit-Hose Group 2 TO 4 Way (Lift Height 5810 / 5468mm)	4281830
Kit-Hose Group 2 TO 4 Way (Lift Height 5960 / 5618mm)	4281831
Kit-Hose Group 2 TO 4 Way (Lift Height 6110 / 5768mm)	4281832
Kit-Hose Group 2 TO 4 Way (Lift Height 6260 / 5918mm)	4281833
Kit-Hose Group 2 TO 4 Way (Lift Height 6410 / 6068mm)	4281834
Kit-Hose Group 2 TO 4 Way (Lift Height 6560 / 6218mm)	4281835
Kit-Hose Group 2 TO 4 Way (Lift Height 6710 / 6368mm)	4281836
Kit-Hose Group 2 TO 4 Way (Lift Height 6860 / 6518mm)	4281837
Kit-Hose Group 2 TO 4 Way (Lift Height 7010 / 6668mm)	4281838
Kit-Hose Group 2 TO 4 Way (Lift Height 7160 / 6818mm)	4281839
Kit-Hose Group 2 TO 4 Way (Lift Height 7310 / 6968mm)	4281840
Kit-Hose Group 3 TO 4 Way (Lift Height 3960/3618 - 4460/4118)	4282091
Kit-Hose Group 3 TO 4 Way (Lift Height 4610 / 4268mm)	4282092
Kit-Hose Group 3 TO 4 Way (Lift Height 4760 / 4418mm)	4282093
Kit-Hose Group 3 TO 4 Way (Lift Height 4910 / 4568mm)	4282094
Kit-Hose Group 3 TO 4 Way (Lift Height 5060 / 4718mm)	4282095
Kit-Hose Group 3 TO 4 Way (Lift Height 5210 / 4868mm)	4282096
Kit-Hose Group 3 TO 4 Way (Lift Height 5360 / 5018mm)	4282097
Kit-Hose Group 3 TO 4 Way (Lift Height 5510 / 5168mm)	4282098
Kit-Hose Group 3 TO 4 Way (Lift Height 5660 / 5318mm)	4282099
Kit-Hose Group 3 TO 4 Way (Lift Height 5810 / 5468mm)	4282100

©2026 HYSTER COMPANY

CONVERSION KITS
HEADER HOSE
3FFL
(CONTINUED)

DESCRIPTION	PART NUMBER
Kit-Hose Group 3 TO 4 Way (Lift Height 5960 / 5618mm)	4282101
Kit-Hose Group 3 TO 4 Way (Lift Height 6110 / 5768mm)	4282102
Kit-Hose Group 3 TO 4 Way (Lift Height 6260 / 5918mm)	4282103
Kit-Hose Group 3 TO 4 Way (Lift Height 6410 / 6068mm)	4282104
Kit-Hose Group 3 TO 4 Way (Lift Height 6560 / 6218mm)	4282105
Kit-Hose Group 3 TO 4 Way (Lift Height 6710 / 6368mm)	4282106
Kit-Hose Group 3 TO 4 Way (Lift Height 6860 / 6518mm)	4282107
Kit-Hose Group 3 TO 4 Way (Lift Height 7010 / 6668mm)	4282108
Kit-Hose Group 3 TO 4 Way (Lift Height 7160 / 6818mm)	4282109
Kit-Hose Group 3 TO 4 Way (Lift Height 7310 / 6968mm)	4282110

CONVERSION KITS
HEADER HOSE
H50A WITH 28X9 TIRES

DESCRIPTION	PART NUMBER
Kit-Hose Group 2 TO 3 Way (Lift Height 3960/3618 - 4460/4118)	4281911
Kit-Hose Group 2 TO 3 Way (Lift Height 4610 / 4268mm)	4281912
Kit-Hose Group 2 TO 3 Way (Lift Height 4760 / 4418mm)	4281913
Kit-Hose Group 2 TO 3 Way (Lift Height 4910 / 4568mm)	4281914
Kit-Hose Group 2 TO 3 Way (Lift Height 5060 / 4718mm)	4281915
Kit-Hose Group 2 TO 3 Way (Lift Height 5210 / 4868mm)	4281916
Kit-Hose Group 2 TO 3 Way (Lift Height 5360 / 5018mm)	4281917
Kit-Hose Group 2 TO 3 Way (Lift Height 5510 / 5168mm)	4281918
Kit-Hose Group 2 TO 3 Way (Lift Height 5660 / 5318mm)	4281919
Kit-Hose Group 2 TO 3 Way (Lift Height 5810 / 5468mm)	4281920
Kit-Hose Group 2 TO 3 Way (Lift Height 5960 / 5618mm)	4281921
Kit-Hose Group 2 TO 3 Way (Lift Height 6110 / 5768mm)	4281922
Kit-Hose Group 2 TO 3 Way (Lift Height 6260 / 5918mm)	4281923
Kit-Hose Group 2 TO 3 Way (Lift Height 6410 / 6068mm)	4281924
Kit-Hose Group 2 TO 3 Way (Lift Height 6560 / 6218mm)	4281925
Kit-Hose Group 2 TO 3 Way (Lift Height 6710 / 6368mm)	4281926
Kit-Hose Group 2 TO 3 Way (Lift Height 6860 / 6518mm)	4281927
Kit-Hose Group 2 TO 3 Way (Lift Height 7010 / 6668mm)	4281928
Kit-Hose Group 2 TO 3 Way (Lift Height 7160 / 6818mm)	4281929
Kit-Hose Group 2 TO 3 Way (Lift Height 7310 / 6968mm)	4281930

©2026 HYSTER COMPANY

CONVERSION KITS
HEADER HOSE
H50A WITH 28X9 TIRES
(CONTINUED)

DESCRIPTION	PART NUMBER
Kit-Hose Group 2 TO 4 Way (Lift Height 3960/3618 - 4460/4118)	4281941
Kit-Hose Group 2 TO 4 Way (Lift Height 4610 / 4268mm)	4281942
Kit-Hose Group 2 TO 4 Way (Lift Height 4760 / 4418mm)	4281943
Kit-Hose Group 2 TO 4 Way (Lift Height 4910 / 4568mm)	4281944
Kit-Hose Group 2 TO 4 Way (Lift Height 5060 / 4718mm)	4281945
Kit-Hose Group 2 TO 4 Way (Lift Height 5210 / 4868mm)	4281946
Kit-Hose Group 2 TO 4 Way (Lift Height 5360 / 5018mm)	4281947
Kit-Hose Group 2 TO 4 Way (Lift Height 5510 / 5168mm)	4281948
Kit-Hose Group 2 TO 4 Way (Lift Height 5660 / 5318mm)	4281949
Kit-Hose Group 2 TO 4 Way (Lift Height 5810 / 5468mm)	4281950
Kit-Hose Group 2 TO 4 Way (Lift Height 9960 / 5618mm)	4281951
Kit-Hose Group 2 TO 4 Way (Lift Height 6110 / 5768mm)	4281952
Kit-Hose Group 2 TO 4 Way (Lift Height 6260 / 5918mm)	4281953
Kit-Hose Group 2 TO 4 Way (Lift Height 6410 / 6068mm)	4281954
Kit-Hose Group 2 TO 4 Way (Lift Height 6560 / 6218mm)	4281955
Kit-Hose Group 2 TO 4 Way (Lift Height 6710 / 6368mm)	4281956
Kit-Hose Group 2 TO 4 Way (Lift Height 6860 / 6518mm)	4281957
Kit-Hose Group 2 TO 4 Way (Lift Height 7010 / 6668mm)	4281958
Kit-Hose Group 2 TO 4 Way (Lift Height 7160 / 6818mm)	4281959
Kit-Hose Group 2 TO 4 Way (Lift Height 7310 / 6968mm)	4281960
Kit-Hose Group 3 TO 4 Way (Lift Height 3960/3618 - 4460/4118)	4282201
Kit-Hose Group 3 TO 4 Way (Lift Height 4610 / 4268mm)	4282202
Kit-Hose Group 3 TO 4 Way (Lift Height 4760 / 4418mm)	4282203
Kit-Hose Group 3 TO 4 Way (Lift Height 4910 / 4568mm)	4282204
Kit-Hose Group 3 TO 4 Way (Lift Height 5060 / 4718mm)	4282205
Kit-Hose Group 3 TO 4 Way (Lift Height 5210 / 4868mm)	4282206
Kit-Hose Group 3 TO 4 Way (Lift Height 5360 / 5018mm)	4282207
Kit-Hose Group 3 TO 4 Way (Lift Height 5510 / 5168mm)	4282208
Kit-Hose Group 3 TO 4 Way (Lift Height 5660 / 5318mm)	4282209
Kit-Hose Group 3 TO 4 Way (Lift Height 5810 / 5468mm)	4282210
Kit-Hose Group 3 TO 4 Way (Lift Height 5960 / 5618mm)	4282211
Kit-Hose Group 3 TO 4 Way (Lift Height 6110 / 5768mm)	4282212
Kit-Hose Group 3 TO 4 Way (Lift Height 6260 / 5918mm)	4282213
Kit-Hose Group 3 TO 4 Way (Lift Height 6410 / 6068mm)	4282214
Kit-Hose Group 3 TO 4 Way (Lift Height 6560 / 6218mm)	4282215

©2026 HYSTER COMPANY

CONVERSION KITS
HEADER HOSE
H50A WITH 28X9 TIRES
(CONTINUED)

DESCRIPTION	PART NUMBER
Kit-Hose Group 3 TO 4 Way (Lift Height 6710 / 6368mm)	4282216
Kit-Hose Group 3 TO 4 Way (Lift Height 6860 / 6518mm)	4282217
Kit-Hose Group 3 TO 4 Way (Lift Height 7010 / 6668mm)	4282218
Kit-Hose Group 3 TO 4 Way (Lift Height 7160 / 6818mm)	4282219
Kit-Hose Group 3 TO 4 Way (Lift Height 7310 / 6968mm)	4282220

CONVERSION KITS
HYDRAULIC CONTROL VALVES
ELECTRIC HYDRAULICS

DESCRIPTION	PART NUMBER
Kit - Electronic Conversion, 3F w/o Clamp to 4F w/o Clamp (w/ Gear Pump)	**a**4333627
Kit - Electronic Conversion, 3F w/o Clamp to 4F w/o Clamp (w/ Gear Pump)	**b**4333628
Kit - Electronic Conversion, 3F w/o Clamp to 4F w/o Clamp (w/ VDP)	**a**4333679
Kit - Electronic Conversion, 3F w/o Clamp to 4F w/o Clamp (w/ VDP)	**b**4333680
Kit - Electronic Conversion, 3F w/o Clamp to 4F w/o Clamp (w/ VDP + Fan)	**a**4333681
Kit - Electronic Conversion, 3F w/o Clamp to 4F w/o Clamp (w/ VDP + Fan)	**b**4333682
Kit - Electronic Conversion, 3F w/o Clamp to 4F w/ Clamp (w/ Gear Pump)	**a**4333884
Kit - Electronic Conversion, 3F w/o Clamp to 4F w/ Clamp (w/ Gear Pump)	**b**4333885
Kit - Electronic Conversion, 3F w/o Clamp to 4F w/ Clamp (w/ VDP)	**a**4333886
Kit - Electronic Conversion, 3F w/o Clamp to 4F w/ Clamp (w/ VDP)	**b**4333887
Kit - Electronic Conversion, 3F w/o Clamp to 4F w/ Clamp (w/ VDP + Fan)	**a**4333888
Kit - Electronic Conversion, 3F w/o Clamp to 4F w/ Clamp (w/ VDP + Fan)	**b**4333889
Kit - Electronic Conversion, 3F w/ Clamp to 4F w/ Clamp (w/ Gear Pump)	**a**4333799
Kit - Electronic Conversion, 3F w/ Clamp to 4F w/ Clamp (w/ Gear Pump)	**b**4333800
Kit - Electronic Conversion, 3F w/ Clamp to 4F w/ Clamp (w/ VDP)	**a**4333801
Kit - Electronic Conversion, 3F w/ Clamp to 4F w/ Clamp (w/ VDP)	**b**4333802
Kit - Electronic Conversion, 3F w/ Clamp to 4F w/ Clamp (w/ VDP + Fan)	**a**4333803
Kit - Electronic Conversion, 3F w/ Clamp to 4F w/ Clamp (w/ VDP + Fan)	**b**4333804

FOOTNOTES:
a H40A - H50A
b H60A - H70A

CONVERSION KITS
HYDRAULIC CONTROL VALVES
EHYD JOYSTICK

CONVERSION KITS
HYDRAULIC CONTROL VALVES
EHYD JOYSTICK
(CONTINUED)

DESCRIPTION	PART NUMBER
Kit - Joystick Conversion, 3F w/o Clamp to 3F w/ Clamp	**b**4336519
Kit - Joystick Conversion, 4F w/o Clamp to 4F w/ Clamp	**b**4336521
Kit - Joystick Conversion, 3F w/o Clamp to 4F w/o Clamp	**a**4336523
Kit - Joystick Conversion, 3F w/o Clamp to 4F w/ Clamp	**b**4336525
Kit - Joystick Conversion, 3F w/ Clamp to 4F w/ Clamp	**b**4336527

FOOTNOTES:
a Kit requires software change via dash display.
b Kit requires software that must be dealer installed. Dealer to obtain new configuration file from Hypass Online.

CONVERSION KITS
HYDRAULIC CONTROL VALVES
EHYD MINI LEVER MODULE

DESCRIPTION	PART NUMBER
Kit - MLM Conversion, 3F w/o Clamp to 3F w/ Clamp	**b**4333891
Kit - MLM Conversion, 4F w/o Clamp to 4F w/ Clamp	**b**4333893
Kit - MLM Conversion, 3F w/o Clamp to 4F w/o Clamp	**a**4333874
Kit - MLM Conversion, 3F w/o Clamp to 4F w/ Clamp	**b**4333876
Kit - MLM Conversion, 3F w/ Clamp to 4F w/ Clamp	**b**4333878

FOOTNOTES:
a Kit requires software change via dash display.
b Kit requires software that must be dealer installed. Dealer to obtain new configuration file from Hypass Online.

CONVERSION KITS
HYDRAULIC CONTROL VALVES
MANUAL HYDRAULICS

DESCRIPTION	PART NUMBER
Kit - M-Hyd Valve Conversion, 3F w/o Clamp to 4F w/o Clamp	**a b**4331202
Kit - M-Hyd Valve Conversion, 3F w/o Clamp to 4F w/o Clamp	**a c**4331203
Kit - M-Hyd Valve Conversion, 3F w/o Clamp to 4F w/o Clamp (w/ Tilt SPS)	**a b**4331204
Kit - M-Hyd Valve Conversion, 3F w/o Clamp to 4F w/o Clamp (w/ Tilt SPS)	**a c**4331205
Kit - M-Hyd Valve Conversion, 3F w/o Clamp to 4F w/o Clamp (w/ Tilt SPS)	**b d**4331206
Kit - M-Hyd Valve Conversion, 3F w/o Clamp to 4F w/o Clamp (w/ Tilt SPS)	**c d**4331207
Kit - M-Hyd Valve Conversion, 3F w/o Clamp to 4F w/ Clamp	**a b**4331303
Kit - M-Hyd Valve Conversion, 3F w/o Clamp to 4F w/ Clamp	**a c**4331304

©2026 HYSTER COMPANY

CONVERSION KITS
HYDRAULIC CONTROL VALVES
MANUAL HYDRAULICS
(CONTINUED)

DESCRIPTION	PART NUMBER
Kit - M-Hyd Valve Conversion, 3F w/o Clamp to 4F w/ Clamp (w/ Tilt SPS)	**a b**4331305
Kit - M-Hyd Valve Conversion, 3F w/o Clamp to 4F w/ Clamp (w/ Tilt SPS)	**a c**4331306
Kit - M-Hyd Valve Conversion, 3F w/o Clamp to 4F w/ Clamp (w/ Tilt SPS)	**b d**4331307
Kit - M-Hyd Valve Conversion, 3F w/o Clamp to 4F w/ Clamp (w/ Tilt SPS)	**c d**4331308
Kit - M-Hyd Valve Conversion, 4F w/o Clamp to 4F w/ Clamp	**b**4331044
Kit - M-Hyd Valve Conversion, 4F w/o Clamp to 4F w/ Clamp	**c**4331045
Kit - M-Hyd Valve Conversion, 3F w/o Clamp to 4F w/o Clamp (w/ Tilt SPS)	**a b**4373272
Kit - M-Hyd Valve Conversion, 3F w/o Clamp to 4F w/o Clamp (w/ Tilt SPS)	**a c**4373273
Kit - M-Hyd Valve Conversion, 3F w/o Clamp to 4F w/o Clamp (w/ Tilt SPS)	**b d**4373274
Kit - M-Hyd Valve Conversion, 3F w/o Clamp to 4F w/o Clamp (w/ Tilt SPS)	**c d**4373275
Kit - M-Hyd Valve Conversion, 3F w/o Clamp to 4F w/ Clamp (w/ Tilt SPS)	**a b**4365136
Kit - M-Hyd Valve Conversion, 3F w/o Clamp to 4F w/ Clamp (w/ Tilt SPS)	**a c**4365137
Kit - M-Hyd Valve Conversion, 3F w/o Clamp to 4F w/ Clamp (w/ Tilt SPS)	**b d**4365138
Kit - M-Hyd Valve Conversion, 3F w/o Clamp to 4F w/ Clamp (w/ Tilt SPS)	**c d**4365139
Kit - Manual Lever Conversion, 3F w/o Clamp to 3F w/ Clamp	4373685
Kit - Manual Lever Conversion, 3F w/o Clamp to 4F w/o Clamp	4373687
Kit - Manual Lever Conversion, 3F w/o Clamp to 4F w/ Clamp	4373689

FOOTNOTES:
a Gear Pump
b H40A - H50A
c H60A - H70A
d VDP

CONVERSION KITS
PUSH BUTTON TO KEY SWITCH START

DESCRIPTION	PART NUMBER
Kit-Conversion (Push Button to Key Switch Start)	81022899

CONVERSION KITS
RADIATOR

DESCRIPTION	PART NUMBER
Kit-Conversion (2 Row w/ Hyd Oil Cooler to 3 Row w/ Hyd Oil Cooler)	4393343

CONVERSION KIT
SEATS
NON SUSPENSION TO FULL SUSPENSION

CONVERSION KIT
SEATS
NON SUSPENSION TO FULL SUSPENSION
(CONTINUED)

DESCRIPTION	PART NUMBER
Kit-Seat (Non Suspension to Full Suspension)	4384141

CONVERSION KITS
STEERING
TO SYNCHRONOUS

DESCRIPTION	PART NUMBER
Kit (Standard to Synchronous Steering, Column and Axle Cmpts)	81058070
Kit (Standard to Synchronous Steering, Column Cmpts)	81058072

CONVERSION KITS
STEER COLUMN

DESCRIPTION	PART NUMBER
Kit-Conversion - Steer Column, Fixed to Telescopic (Key Start)	81075318
Kit-Conversion - Steer Column, Fixed to Telescopic (Pushbutton Start)	81076944

CONVERSION KITS
TRANSMISSION

DESCRIPTION	PART NUMBER
Kit-Conversion - Transmission (Advanced to Basic)	81049900
Kit-Conversion (CDP to VDP Hyd Pump with Wet Brake Assembly)	81051703

CONVERSION KITS
WIDE TREAD AND DUAL WHEEL

DESCRIPTION	PART NUMBER
Kit-Wide Tread (7 - 12 Solid, 6 Lugs Axle)	4335330
Kit-Wide Tread (7 - 12 Solid, 8 Lugs Axle)	4335331
Kit-Wide Tread (28 x 9 - 15 Solid, 6 Lugs Axle)	4335332
Kit-Wide Tread (28 x 9 - 15 Solid, 8 Lugs Axle)	4335333
Kit-Dual Drive Wheels (Dual Drive Wheels, 8 Lugs Axle)	4336191

REPAIR KIT
FREE LIFT HEADER HOSE
2 AND 3 FFL

DESCRIPTION	PART NUMBER
Kit-Repair - Free Lift Header Hose	4282294

©2026 HYSTER COMPANY

REPAIR KITS

DESCRIPTION	PART NUMBER
Kit - Mhyd Anti-shudder w/ clamp	4351432
Kit - Mhyd Anti-shudder w/o clamp	4351433
Kit-Service (PDM, xmsn, Eng Interconnect Dsl/LPG)	81003963
Kit-Service (PDM, xmsn, Eng Interconnect Dsl IDI)	81003964
Kit-Service (Xmsn, Eng Interconnect Dsl/LPG)	81004008
Kit-Service (Xmsn, Eng Interconnect Dsl IDI)	81004009
Kit-Service (Eng Interconnect Dsl IDI)	81004013
Kit-Service (Eng Interconnect Dsl/LPG)	81004014
Kit-Switch (Q-Current w/ Jumper) (Dry Brake)	4376939
Kit-Switch (Q-Current w/o Jumper) (Dry Brake)	4376940
Kit-Switch (Q-Current w/ Jumper) (Wet Brake)	4376941
Kit-Switch (Q-Current w/o Jumper) (Wet Brake)	4376942
Kit - Power to Mast Cowl Bracket	81040868
Kit - Park Brake Release Tubes	81070550

SERVICE KITS
MAST HEIGHT SENSOR

DESCRIPTION	PART NUMBER
Kit-Service - Mast Height Sensor, FFL w/ Header Hose	4087103
Kit-Service - Mast Height Sensor, FFL w/o Header Hose	4087104
Kit-Service - Mast Height Sensor, 2LFL	4087101

SPECIAL SERVICE TOOLS
DRIVE AXLE

DESCRIPTION	PART NUMBER
Tool (Centering) P23	4206343
Tool (Seal Press) P23	4206344
Tool (Bearing Cup Press, Top) P23	4206345
Tool (Bearing Press, Bottom)	4206346
Tool (Pinion)	4349052

NOTES

©2026 HYSTER COMPANY

24 NUMERICAL INDEX

SECTION 24
NUMERICAL INDEX

PART NO.	PAGE	ITEM
126	6-9	24
	6-11	21
206	15-19	12
12928	8-9	9
12929	15-19	9
13957	14-3	31
	14-3	35
	14-8	38
	14-8	42
	17-16	14
	17-20	14
13963	14-3	27
	14-7	23
14191	14-9	9
14349	9-5	17
14372	9-5	11
14385	8-5	24
14591	16-51	5
	16-53	17
	16-54	6
	16-62	1
14594	8-5	14
	10-7	4
	10-11	8
14595	16-11	30
	16-19	24
15055	7-19	14
15155	7-19	15
15222	17-5	40
	17-9	40
	17-17	40
	17-21	40
	17-44	40
	17-50	40
	18-8	22
	18-28	22
	19-3	18
	19-7	12
	20-8	11
	20-12	7
	20-26	11
	20-30	7
	20-63	11
	20-67	7
	20-77	11
	20-81	7
15224	17-5	40
	17-9	40
	17-17	40

PART NO.	PAGE	ITEM
	17-26	8
	17-29	21
	17-31	21
	17-33	7
	18-8	22
	18-28	22
	18-46	23
	18-49	6
	19-7	18
	19-23	6
	19-26	19
	20-8	11
	20-12	7
	20-12	21
	20-26	11
	20-30	7
	20-30	28
	20-40	19
	20-43	6
	20-67	21
	20-82	28
15227	14-3	12
	14-7	12
15232	19-10	50
	19-14	50
15234	19-10	47
	19-14	47
15880	18-42	14
	20-35	14
	20-86	14
15918	11-7	16
	11-13	25
15920	11-7	24
	11-13	30
16010	17-5	15
	17-9	15
	17-44	15
	17-50	15
	18-4	11
	18-23	11
	19-9	18
	19-13	18
	20-3	13
	20-21	13
	20-61	13
	20-75	13
16040	16-127	5

PART NO.	PAGE	ITEM
16041	16-127	9
	17-17	14
	17-21	14
	17-35	3
16073	16-87	14
	16-89	24
16121	10-7	6
	10-7	11
16134	9-7	35
	9-11	39
	9-15	42
	9-18	18
	9-21	34
16190	10-11	6
16271	9-5	18
16481	16-11	10
	16-15	10
	16-51	5
	16-53	17
	16-54	6
	16-62	1
16483	9-3	20
	10-3	33
	10-5	20
	10-7	5
	10-11	4
	12-3	7
	12-4	22
	15-9	7
	16-7	8
	16-9	8
	16-75	11
	19-9	30
	19-13	30
16484	12-4	19
	15-3	8
	15-3	10
	15-43	10
	16-11	24
	16-15	24
	16-19	25
	16-22	25
	16-25	38
	16-29	26
16485	16-11	8
	16-15	8
	16-20	40
	16-22	40

PART NO.	PAGE	ITEM
	16-97	17
	16-97	17
	16-99	17
	16-99	17
16486	16-11	26
	16-15	30
	16-19	28
	16-22	32
	16-25	43
16487	16-11	4
	16-15	5
16863	9-5	21
	9-7	40
	9-11	30
	9-15	31
	9-18	18
	9-21	38
16984	16-11	9
	16-15	9
	16-19	12
	16-22	15
17093	2-19	13
17221	10-3	33
	10-5	20
	15-9	7
	19-9	30
	19-13	30
18706	11-70	11
18824	6-9	9
	6-11	9
18974	13-3	2
21420	12-13	17
30370	7-3	3
	7-5	3
	7-11	6
	7-13	6
30371	7-3	5
	7-5	5
	7-11	8
	7-13	8
34507	9-7	14
	9-11	15
	9-15	15
	9-21	33
39152	18-11	12
	18-30	12
39373	19-17	13
	19-18	15
39374	16-73	12

©2026 HYSTER COMPANY

NUMERICAL INDEX (continued)

PART NO.	PAGE	ITEM
39383	12-3	13
39678	14-3	26
	14-7	24
43207	12-9	2
43208	12-5	11
	12-13	2
	12-15	2
44308	12-5	3
44312	13-3	5
46388	16-73	6
55146	19-21	7
55407	17-29	9
	18-45	10
	19-25	5
	20-39	5
57664	16-54	5
	19-17	12
	19-18	14
58901	17-25	2
	17-29	26
	17-31	25
	17-33	2
	18-46	25
	18-49	4
	19-23	4
	19-26	25
	20-40	25
	20-43	4
58903	14-3	33
	14-8	41
59229	17-12	17
	17-24	17
	17-46	17
	17-52	17
	18-11	8
	18-16	9
	18-19	9
	18-30	8
	18-34	9
	18-37	9
	20-33	17
	20-84	17
60836	17-12	18
	17-46	18
	17-52	18
	18-16	13
	18-19	13
	18-34	13
	18-38	13
	20-15	18
	20-33	18
	20-70	18
	20-84	18
63117	7-15	14
	7-17	7
	7-19	7
	7-21	7
	7-23	7
69029	14-3	13
	14-7	10
78286	22-63	2
87281	12-3	8
	12-5	9
89220	10-3	16
	10-5	29
	11-73	22
	11-89	28
90263	18-42	14
	20-18	14
	20-72	14
92861	17-12	17
	17-31	9
	17-46	17
	18-45	10
	19-25	5
	20-15	17
	20-39	5
	20-70	17
97999	9-7	38
	9-11	28
	9-15	29
	9-18	26
	9-21	40
100153	17-24	18
	18-16	13
	18-34	13
101625	11-76	22
	11-91	14
	11-97	12
101809	9-7	4
	9-11	4
	9-15	4
	9-18	14
	9-21	2
104506	17-5	28
	17-9	28
	17-17	28
	17-21	28
	17-44	28
	17-50	28
	18-4	18
	18-24	18
	19-7	8
	19-9	8
	19-13	8
	20-8	4
	20-26	4
	20-63	4
	20-77	4
112989	2-3	16
	2-9	12
113341	11-76	22
	11-97	12
114312	9-3	15
115696	2-3	5
	2-9	5
	2-13	5
	2-17	4
	2-19	5
	22-63	2
119074	11-7	19
	11-9	32
	11-13	23
	11-17	26
	11-23	23
	11-27	6
	11-29	16
	11-31	14
	11-33	19
	11-37	16
	11-39	19
	11-43	17
	11-47	17
124603	12-9	6
127045	16-11	5
	16-15	6
	16-19	14
	16-22	13
	16-25	30
128263	6-9	23
128408	11-17	25
	11-37	14
	11-47	15
128444	17-29	4
	18-45	5
	19-25	9
	20-39	9
129387	17-5	26
	17-9	26
	17-17	26
	17-21	26
	17-25	4
	17-29	24
	17-31	23
	17-33	4
	17-44	26
	17-50	26
	18-4	21
	18-8	16
	18-24	21
	18-28	16
	18-46	21
	18-49	3
	19-3	3
	19-7	3
	19-9	3
	19-13	3
	19-23	3
	19-26	24
	20-3	3
	20-8	8
	20-12	19
	20-21	3
	20-26	8
	20-30	19
	20-40	24
	20-43	3
	20-61	3
	20-63	8
	20-67	19
	20-75	3
	20-77	8
	20-81	19
129563	1-89	13
	11-53	13
	11-55	10
	11-91	16
	11-93	11
	11-95	10
	11-97	18
	11-107	5
	11-107	6
	11-117	15
	11-155	5
	11-329	15
	11-348	25
	11-353	33
	11-359	8
	11-360	6
	15-45	4

©2026 HYSTER COMPANY

NUMERICAL INDEX (continued)

PART NO.	PAGE	ITEM
	22-49	2
129684	11-7	18
	11-9	30
	11-23	16
	11-27	5
	11-31	10
	11-33	17
	11-39	17
130845	1-76	3
	1-77	3
	1-78	12
	1-81	3
	1-82	4
	15-25	38
	16-11	25
	16-15	26
	16-19	29
	16-22	27
	16-25	39
	16-97	7
	16-99	7
131358	17-5	35
	17-9	35
	17-25	5
	17-29	23
	17-31	19
	17-33	10
	18-8	5
	18-28	5
	19-10	42
	19-14	42
132131	14-8	51
	15-25	31
	15-33	2
	15-35	5
	22-25	6
132972	16-87	13
	16-89	23
134173	16-11	4
	16-15	5
134675	16-127	15
135657	14-3	7
	14-3	19
	14-3	24
	14-7	5
	14-7	16
	14-7	26
	14-8	36
135658	14-3	6
	14-3	18
	14-3	25
	14-7	6
	14-7	15
	14-7	25
136516	13-8	7
	13-9	5
136749	22-29	3
137852	11-181	38
	11-187	31
	11-198	16
	11-233	25
	11-245	90
	11-249	28
	11-259	13
	11-273	33
	11-295	25
	11-301	42
	16-109	20
	16-111	24
	16-114	26
	16-116	23
	16-119	24
	17-40	14
	20-55	19
	20-57	19
	20-93	19
138710	1-76	12
	1-77	10
	1-78	11
140465	3-3	13
	4-3	13
	5-3	15
140612	11-18	34
	11-29	31
	11-31	27
	11-37	29
	11-43	36
	11-47	36
141331	2-5	7
	2-7	1
	2-11	6
	2-15	7
142247	22-45	21
146540	22-35	5
	22-36	1
	22-37	1
	22-38	1
147972	17-31	10
	18-11	7
	18-16	8
	18-19	8
	18-30	7
	18-34	8
	18-37	8
	18-45	9
	19-25	6
	20-39	6
147973	16-73	7
	18-42	13
	20-18	13
	20-72	13
148613	11-161	8
	11-165	10
	11-329	3
148614	11-383	11
	11-383	12
	11-385	36
	11-387	7
	11-387	8
	11-388	30
148615	11-384	31
	11-384	32
	11-388	27
	11-388	28
148789	11-13	15
148790	11-9	14
	11-17	13
148791	11-39	33
	11-43	31
	11-47	31
148792	11-9	20
	11-13	12
	11-56	1
148793	11-17	18
153069	1-76	11
	15-29	16
	15-31	21
153919	17-29	10
	18-45	9
	19-25	6
	20-39	6
154208	1-65	25
	1-67	25
	8-3	23
154375	16-73	7
160653	13-29	3
161884	14-24	3
161885	14-24	4
161889	13-22	3
161890	13-22	4
161894	14-24	3
164840	18-42	13
	20-35	13
	20-86	13
165053	19-18	4
165991	2-3	11
	2-9	7
	2-13	13
166818	8-6	34
	8-7	3
166857	1-82	4
	10-5	34
	15-29	2
	15-31	1
	15-35	8
	16-29	25
	16-87	3
	16-89	4
	16-91	3
	16-93	3
168718	9-3	24
	10-3	4
	10-5	4
	10-5	34
	10-9	4
170658	1-121	4

NUMERICAL INDEX (continued)

PART NO.	PAGE	ITEM
171007	15-3	10
	15-43	10
	16-29	26
175861	16-105	23
	16-107	24
	16-114	30
	16-119	38
176454	16-89	10
	16-94	20
	16-121	19
	16-123	19
176704	8-9	4
177303	16-97	15
	16-99	15
178119	11-9	42
	11-23	6
	11-33	35
	11-39	39
	18-8	3
	18-28	3
181899	8-5	7
	16-32	9
	16-33	9
183614	14-3	16
	14-7	7
183615	14-3	15
	14-7	8
184451	9-7	3
	9-11	3
	9-15	3
	9-21	5
185860	14-3	36
	14-8	43
186304	11-153	1
	14-11	14
	14-15	15
187388	17-12	8
	17-24	8
	17-46	8
	17-52	8
	18-41	7
	19-21	14
	20-14	8
	20-17	7
	20-32	8
	20-35	7
	20-70	8
	20-71	7
	20-84	8
	20-85	7
188534	16-35	
	16-35	
	16-35	
	16-41	
	16-41	
	16-41	
	16-56	
	16-64	
	16-64	
190380	11-153	4
190580	17-12	6
	17-24	6
	17-46	6
	17-52	6
	18-42	16
	19-21	12
	20-14	6
	20-18	16
	20-32	6
	20-36	16
	20-70	6
	20-72	16
	20-84	6
	20-86	16
190887	18-11	10
	18-16	11
	18-19	11
	18-30	10
	18-34	11
	18-37	11
	18-41	4
	19-21	16
	20-17	4
	20-35	4
	20-71	4
	20-85	4
192306	10-11	7
194362	11-17	19
	11-29	5
	11-29	7
	11-31	3
	11-31	22
	11-33	5
	11-37	5
	11-39	5
	11-43	5
	11-43	8
	11-47	5
194368	11-13	13
195769	7-19	13
	7-21	15
	7-23	16
196196	11-384	30
199852	16-73	10
201829	19-21	9
203230	22-55	12
	22-57	14
203691	11-9	17
	11-17	15
	11-29	3
	11-31	23
	11-33	3
	11-37	3
	11-39	3
	11-43	3
	11-47	3
204128	16-11	10
	16-15	10
206028	1-101	11
209266	11-55	17
210641	12-17	27
212786	1-76	7
	1-77	13
215928	19-17	10
	19-18	12
216895	13-32	6
221353	1-113	12
	1-117	12
221355	8-9	14
221542	1-113	20
221771	8-9	13
222442	16-11	10
	16-15	10
222443	12-3	7
	12-4	22
	16-7	8
	16-9	8
	16-75	11
222445	16-11	9
	16-15	9
	16-19	12
	16-22	15
222502	12-4	19
	15-3	8
	16-11	24
	16-15	24
	16-19	25
	16-22	25
	16-25	38
	16-89	1
222512	16-97	17
	16-99	17
222535	12-17	12
227155	1-117	20
227157	1-115	4
233141	11-165	8
	11-329	13
233693	16-11	8
	16-15	8
	16-20	40
	16-22	40
235691	12-13	11
	12-13	18
	12-15	11
	12-15	11
237812	16-73	12
	19-18	3
240065	13-32	6
244540	15-19	23
248196	11-169	7
	11-169	8
	11-169	9
	11-169	10
	11-169	13
	11-169	14
	11-170	24
	11-170	25
	11-173	6
	16-22	25
	16-87	19
	16-89	2
	16-91	19
	16-93	19
222504	16-97	17
	16-99	17
222510	16-11	24
	16-15	24
	16-19	25
	16-22	25
	16-25	38
	16-89	1
222512	16-97	17
	16-99	17
222535	12-17	12
227155	1-117	20
227157	1-115	4
233141	11-165	8
	11-329	13
233693	16-11	8
	16-15	8
	16-20	40
	16-22	40
235691	12-13	11
	12-13	18
	12-15	11
	12-15	11
237812	16-73	12
	19-18	3
240065	13-32	6
244540	15-19	23
248196	11-169	7
	11-169	8
	11-169	9
	11-169	10
	11-169	13
	11-169	14
	11-170	24
	11-170	25
	11-173	6

©2026 HYSTER COMPANY

NUMERICAL INDEX (continued)

PART NO.	PAGE	ITEM
	11-173	7
	11-173	8
	11-173	9
	11-173	11
	11-173	12
	11-174	21
	11-174	22
248212	17-5	35
	17-9	35
	17-17	35
	17-21	35
	17-44	35
	17-50	35
	20-8	5
	20-26	5
	20-63	5
	20-77	5
251994	1-57	14
	1-61	14
	1-65	31
	1-67	31
	1-82	9
	16-89	16
252729	15-31	8
255578	1-78	7
	1-81	12
257913	17-12	5
	17-24	5
	17-46	5
	17-52	5
	18-42	15
	20-14	5
	20-18	15
	20-32	5
	20-70	5
	20-72	15
	20-84	5
258590	11-76	13
	11-97	13
	16-11	13
	16-15	15
	16-19	20
	16-22	18
	16-25	33
262798	11-153	2
264145	1-103	5
	1-110	3
265731	12-13	18
	15-43	13
	16-5	3
	16-5	6
	16-69	10
	16-71	10
	16-75	10
	16-77	11
265787	10-5	10
	15-25	43
	15-43	12
	16-121	17
	16-123	17
	22-74	1
266733	14-3	8
	14-7	18
268619	16-73	6
274221	11-9	16
280154	19-9	27
	19-13	27
287750	22-22	5
287816	10-13	15
287817	6-5	20
287844	6-5	12
	16-89	20
292501	1-27	11
	6-5	20
	22-61	5
292507	15-26	47
292613	1-5	4
292620	19-9	13
	19-13	13
292654	1-9	22
	1-13	30
	1-13	32
	1-17	25
	1-17	27
	1-21	17
	1-23	16
	1-23	18
	22-22	14
292668	10-13	13
292672	22-53	7
292679	10-13	12
293612	8-9	17
293613	8-5	21
	8-14	5
293619	8-5	21
293621	8-5	21
293628	14-3	28
	14-7	27
293646	13-3	12
293686	14-3	3
	14-7	28
293695	1-13	2
293696	3-3	4
	4-3	4
	5-3	5
293710	13-4	26
293741	9-5	16
293758	15-19	16
293762	10-13	7
293796	16-85	25
293797	16-81	27
295649	18-11	9
	18-16	10
	18-19	10
	18-30	9
	18-34	10
	18-37	10
	19-21	15
296011	10-5	17
	15-3	3
296024	13-8	8
	13-9	4
296026	16-81	3
	16-85	3
296039	12-17	17
296145	22-61	6
296149	11-53	16
	11-55	19
296151	22-55	2
296152	16-109	12
	16-111	9
	16-114	10
	16-116	9
	16-119	8
296153	11-99	13
	22-55	11
296159	22-65	8
296160	22-65	4
296162	13-8	6
296163	22-77	7
	22-79	7
	22-80	7
	22-83	7
296165	1-115	3
	20-40	27
296205	22-20	8
296215	11-79	13
296219	11-79	13
296360	1-115	6
	17-40	15
	20-57	22
	20-93	22
296378	10-13	9
	11-23	9
	11-29	38
	11-31	33
	11-33	42
	11-37	36
	11-39	46
	11-43	42
	11-47	43
	11-329	2
296380	11-7	6
	11-9	6
	11-13	6
	11-17	6
	11-23	20
	11-27	7
	11-29	23
	11-31	17
	11-33	26
	11-37	23
	11-39	26
	11-43	24
	11-47	24
	22-59	16
	22-60	7
296381	11-9	37
	11-17	31
	11-27	8
	11-29	24
	11-31	20
	11-33	27
	11-37	24
	11-39	27
	11-43	25
	11-47	25
	13-32	7
296416	1-103	3
296417	8-9	3
296418	1-9	22
	1-9	23

NUMERICAL INDEX (continued)

PART NO.	PAGE	ITEM
	1-13	30
	1-13	31
	1-17	25
	1-17	26
	1-21	17
	1-21	18
	1-23	16
	1-23	17
	8-5	20
	8-9	16
	8-14	4
296419	15-3	4
296420	16-81	2
	16-85	2
296421	1-21	5
	1-23	5
296422	14-4	42
	14-8	56
	16-22	10
296427	1-3	5
	1-4	5
	1-13	3
296430	13-4	27
297531	17-12	7
	17-24	7
	17-46	7
	17-52	7
	18-41	6
	19-21	13
	20-14	7
	20-17	6
	20-32	7
	20-35	6
	20-70	7
	20-71	6
	20-84	7
	20-85	6
297538	19-21	11
	20-35	15
	20-86	15
298132	16-25	29
	16-29	2
	22-55	14
	22-57	16
300751	14-3	30
	14-8	37
300752	14-3	32
	14-8	39
300982	16-127	3
	17-5	17
	17-9	17
	17-17	17
	17-21	17
	17-44	17
	17-50	17
	18-4	16
	18-24	16
	19-9	21
	19-13	21
	20-3	11
	20-21	11
	20-61	11
	20-75	11
302021	22-22	8
302061	11-7	20
302398	15-17	17
	15-19	3
302399	1-57	32
	1-61	32
	1-65	20
	1-67	20
	9-18	8
	10-13	17
	11-7	22
	11-13	29
	15-19	22
302400	1-87	9
	6-11	4
	11-7	21
	11-13	28
	22-5	14
	22-7	15
302401	1-87	9
	1-113	14
	1-117	14
302427	6-5	24
302465	17-5	41
	17-9	41
	17-17	41
	17-21	41
	17-44	41
	17-50	41
	18-9	26
	18-28	26
	19-3	22
	20-8	25
	20-12	6
	20-26	25
	20-30	6
	20-64	25
	20-67	6
	20-78	25
	20-81	6
302468	18-9	27
	18-28	27
	19-3	23
	20-11	4
	20-29	4
	20-67	4
	20-81	4
304510	1-87	3
304522	17-31	4
304526	18-9	33
	18-28	33
	19-7	16
304527	19-10	54
	19-14	54
304552	18-45	5
	19-25	9
	20-39	9
309062	18-41	9
309109	16-101	17
	16-103	17
	16-105	17
	16-107	18
	16-109	18
	16-111	22
	16-114	23
	16-116	30
	16-119	34
313221	11-73	13
	11-76	13
	11-91	15
	11-97	13
313805	16-89	18
313828	1-9	32
	1-115	5
	6-5	11
316825	22-20	4
316826	1-9	7
	1-21	6
316833	22-43	6
	22-45	6
320154	11-65	8
320155	6-5	6
	14-7	33
	15-17	16
	15-19	4
	16-109	13
	16-111	8
	16-114	9
	16-116	8
	16-119	9
320156	1-95	24
320157	1-9	33
	22-62	8
320158	1-99	14
	1-103	12
	4-33	5
	6-5	10
	11-145	2
320159	1-9	6
	22-5	11
	22-7	13
320160	1-113	15
	1-117	15
	22-55	7
321124	13-24	3
321487	15-26	44
322824	17-12	15
	17-24	15
	17-46	15
	17-52	15
	20-15	15
	20-33	15
	20-70	15
	20-84	15
322902	17-12	13
	17-24	13
	17-46	13
	17-52	13
	20-14	13
	20-33	13
	20-70	13
	20-84	13
325182	1-99	9
	11-125	5
325804	1-57	18
	1-61	18
	1-65	30
	1-67	30
326479	13-3	9
329069	15-17	11

©2026 HYSTER COMPANY

NUMERICAL INDEX (continued)

PART NO.	PAGE	ITEM
	15-19	18
334155	19-17	8
	19-18	10
335012	17-12	9
	17-24	9
	17-46	9
	17-52	9
	20-32	9
	20-84	9
335047	16-7	12
	16-9	12
336550	8-3	5
339969	16-5	5
345453	8-3	3
345454	8-3	4
353144	22-50	1
353198	19-9	31
	19-13	31
353206	1-99	13
353304	22-55	12
363475	15-17	10
	15-19	26
367419	21-4	1
367420	21-4	1
367421	21-4	1
367422	21-4	1
367423	21-4	1
367424	21-4	1
369804	16-25	9
	16-29	30
370648	11-81	12
370728	11-303	9
	11-307	8
	11-311	9
	11-315	9
374923	2-5	6
	2-7	9
	2-15	6
375479	11-66	3
375629	22-3	4
378440	17-31	8
	18-45	8
	19-17	9
	19-18	11
	19-25	7
	20-39	7
384211	21-4	1
384213	21-4	1
384214	21-4	1
384215	21-4	1
384216	21-4	1
389129	22-22	5
389688	1-121	5
397676	1-27	4
615135	19-21	6
636941	18-42	10
	20-35	10
	20-86	10
637565	18-41	8
637635	17-12	7
	17-24	7
	17-46	7
	17-52	7
	18-41	6
	19-21	13
	20-14	7
	20-17	6
	20-32	7
	20-35	6
	20-70	7
	20-71	6
	20-84	7
	20-85	6
638246	17-12	9
	17-46	9
	20-14	9
	20-70	9
638249	19-17	6
	19-18	8
638250	19-21	8
806424	11-9	22
	11-29	11
	11-31	2
	11-33	8
	11-37	11
	11-39	8
	11-43	12
	11-47	12
	11-56	3
806425	11-9	25
	11-13	14
	11-17	22
	11-29	10
	11-31	4
	11-33	11
	11-37	10
	11-39	11
	11-43	11
	11-47	11
	11-56	9
815597	11-89	15
866401	11-155	1
	11-155	4
	11-158	3
	11-170	26
	11-174	23
	11-384	20
	11-388	15
878719	1-121	6
878758	9-7	38
	9-11	28
	9-15	29
	9-18	26
	9-21	40
895603	9-7	39
	9-11	29
	9-15	30
	9-18	17
	9-21	39
927433	3-41	13
	11-391	6
980542	13-29	4
1194258	15-17	7
1300094	8-6	27
1302024	11-117	11
1302957	8-3	8
1307737	1-124	5
1308093	21-4	1
1310142	11-179	7
	11-179	8
	11-185	6
	11-185	7
	11-192	16
	11-192	17
	11-200	46
	11-204	19
	11-204	20
	11-212	45
	11-216	17
	11-216	18
	11-224	48
	11-228	19
	11-228	20
	11-236	51
	11-240	19
	11-240	20
	11-245	85
	11-247	6
	11-247	7
	11-254	19
	11-254	20
	11-262	49
	11-266	13
	11-266	14
	11-278	12
	11-282	18
	11-282	19
	11-287	5
	11-287	6
	11-296	39
	11-301	30
	11-324	3

NUMERICAL INDEX (continued)

PART NO.	PAGE	ITEM
	11-333	2
1310143	11-200	45
	11-212	46
	11-224	47
	11-236	50
	11-245	86
	11-262	48
	11-278	13
	11-296	38
	11-301	31
	11-333	1
1310389	14-9	7
1310391	14-9	8
1310611	16-69	6
	16-71	6
	17-4	12
	17-8	12
	17-16	12
	17-20	12
	17-44	12
	17-50	12
	18-3	6
	18-23	6
	19-9	19
	19-13	19
	20-4	17
	20-22	17
	20-61	17
	20-75	17
1316496	16-25	17
	16-29	32
1320669	11-81	13
1323576	11-303	10
	11-307	9
	11-311	12
	11-315	11
	11-319	3
	11-319	4
	11-325	1
	11-329	9
	11-383	6
	11-384	23
	11-385	35
	11-387	5
	11-388	23
1323579	11-174	15
1323581	11-345	3
	11-352	22
	11-385	34
	11-388	22
1323586	11-325	1
	11-329	9
1324307	11-165	13
	11-166	14
1324308	11-165	13
	11-166	14
1324309	11-199	34
	11-221	1
	11-233	1
	11-259	1
	11-294	15
1324310	11-199	34
	11-212	48
	11-221	1
	11-233	1
	11-259	1
	11-271	8
	11-294	15
	11-301	33
1325119	16-128	16
1326652	1-69	28
	1-76	10
	16-87	9
	16-91	17
	16-121	21
	16-123	21
1326653	11-13	22
1326939	1-27	14
1327164	11-145	15
	11-156	2
	11-162	16
	11-166	18
	11-170	17
	11-174	15
	11-199	36
	11-210	22
	11-223	36
	11-235	38
	11-244	76
	11-261	36
	11-277	1
	11-295	29
	11-300	18
	11-343	5
	11-355	4
	11-383	7
	11-387	6
1327246	13-3	23
1327415	16-35	
	16-41	
1327957	11-331	7
	11-345	7
	11-347	7
	11-352	25
1328205	1-119	11
1328890	9-3	
	9-5	
1328892	9-3	
	9-5	
1329147	1-89	2
1329148	11-174	15
	11-288	24
1329149	1-89	2
1329150	1-89	2
	11-156	2
	11-161	16
	11-166	18
	11-199	36
	11-210	22
	11-223	36
	11-235	38
	11-244	76
	11-261	36

©2026 HYSTER COMPANY

NUMERICAL INDEX (continued)

PART NO.	PAGE	ITEM
	11-277	1
	11-295	29
	11-300	18
1329151	1-89	2
	11-156	2
	11-156	3
	11-161	15
	11-161	16
	11-166	17
	11-166	18
	11-199	35
	11-199	36
	11-210	22
	11-210	23
	11-223	35
	11-223	36
	11-235	37
	11-235	38
	11-244	75
	11-244	76
	11-261	35
	11-261	36
	11-277	1
	11-277	2
	11-288	24
	11-295	28
	11-295	29
	11-300	18
	11-300	19
	11-331	3
1329152	11-161	15
	11-166	17
	11-199	35
	11-210	23
	11-223	35
	11-235	37
	11-244	75
	11-261	35
	11-277	2
	11-288	28
	11-295	19
	11-300	3
	11-331	6
1330033	5-29	15
1330281	11-145	3
	11-156	15
	11-161	17
	11-166	17
	11-170	15
	11-174	35
	11-199	23
	11-210	35
	11-223	37
	11-235	75
	11-244	35
	11-261	2
	11-277	24
	11-288	28
	11-295	19
	11-300	3
	11-331	5
	11-343	3
	11-347	4
	11-355	7
	11-383	6
	11-387	5
1330355	11-383	4
	11-387	3
1330414	11-153	2
	11-157	43
	11-200	45
	11-224	48
	11-236	88
	11-245	46
	11-262	10
	11-277	36
	11-296	28
	11-301	2
	11-335	3
	11-336	5
	11-347	2
	11-351	10
	11-351	10
	11-351	1
	11-377	1
1330416	11-176	27
	11-198	1
	11-323	2
	11-331	1
	11-334	1
	11-343	12
	11-364	5
	11-365	7
	11-367	8
	11-369	8
	11-371	8
	22-28	5
1330417	11-161	4
	11-165	24
	11-228	16
	11-240	24
	11-254	19
	11-266	15
	11-282	

NUMERICAL INDEX (continued)

PART NO.	PAGE	ITEM
	11-287	9
	11-316	4
	11-319	2
	11-351	5
	11-359	5
	11-360	2
	11-363	9
	11-364	13
	11-365	4
	11-367	6
	11-369	7
	11-371	7
1330418	11-204	23
	11-321	4
	11-345	4
	11-347	6
	11-352	21
	11-360	2
1330422	11-182	47
	11-188	38
	11-199	40
	11-211	41
	11-223	42
	11-236	45
	11-244	83
	11-250	38
	11-261	43
	11-277	8
	11-296	33
	11-301	26
	11-355	6
1330428	11-182	47
	11-188	38
	11-199	40
	11-211	41
	11-223	42
	11-236	45
	11-244	83
	11-250	38
	11-262	43
	11-277	8
	11-296	33
	11-301	26
	11-355	6
1330437	11-145	11
	11-153	3
	11-157	2
	11-161	5
	11-165	4
	11-170	26
	11-174	23
	11-176	1
	11-179	6
	11-185	5
	11-191	9
	11-200	43
	11-203	12
	11-204	23
	11-212	43
	11-215	9
	11-224	45
	11-227	11
	11-228	24
	11-236	48
	11-240	16
	11-240	28
	11-245	88
	11-247	5
	11-253	11
	11-254	24
	11-262	46
	11-265	9
	11-266	19
	11-277	10
	11-282	15
	11-283	24
	11-287	2
	11-287	9
	11-296	36
	11-301	28
	11-316	4
	11-319	2
	11-321	4
	11-323	1
	11-331	2
	11-334	1
	11-335	2
	11-336	3
	11-343	1
	11-345	4
	11-347	6
	11-352	21
	11-355	1
	11-359	5
	11-360	2
	11-364	12
	11-364	13
	11-365	4
	11-365	5
	11-367	6
	11-367	7
	11-369	7
	11-369	8
	11-371	7

©2026 HYSTER COMPANY

NUMERICAL INDEX (continued)

PART NO.	PAGE	ITEM
	11-371	8
	11-374	5
	11-376	5
	11-377	1
	11-384	19
	22-28	8
1330438	11-145	13
	11-156	4
	11-157	1
	11-161	4
	11-161	10
	11-161	13
	11-162	17
	11-165	3
	11-165	11
	11-166	15
	11-166	19
	11-169	1
	11-169	3
	11-169	4
	11-169	5
	11-169	11
	11-170	23
	11-173	1
	11-173	3
	11-173	5
	11-173	10
	11-173	20
	11-174	2
	11-176	3
	11-176	1
	11-179	19
	11-180	20
	11-180	21
	11-180	23
	11-180	28
	11-180	29
	11-181	34
	11-181	41
	11-181	45
	11-182	46
	11-182	47
	11-182	1
	11-185	17
	11-186	18
	11-186	19
	11-186	20
	11-186	24
	11-186	25
	11-187	29
	11-187	32
	11-187	35
	11-188	36
	11-188	37
	11-188	38
	11-188	6
	11-191	7
	11-191	10
	11-191	12
	11-191	28
	11-192	29
	11-193	32
	11-193	33
	11-193	36
	11-193	41
	11-194	1
	11-197	5
	11-197	9
	11-197	11
	11-197	19
	11-198	26
	11-198	31
	11-199	38
	11-199	39
	11-199	40
	11-199	41
	11-200	42
	11-200	44
	11-203	2
	11-203	3
	11-203	8
	11-203	14
	11-203	16
	11-204	24
	11-204	26
	11-205	35
	11-205	36
	11-205	39
	11-205	40
	11-206	43
	11-209	2
	11-209	4
	11-209	9
	11-209	12
	11-209	14
	11-210	19
	11-210	21
	11-211	31
	11-211	32
	11-211	39
	11-211	41
	11-212	42
	11-212	44
	11-212	47
	11-215	6
	11-215	7

NUMERICAL INDEX (continued)

PART NO.	PAGE	ITEM
	11-215	11
	11-215	13
	11-216	29
	11-217	30
	11-217	33
	11-217	34
	11-217	37
	11-221	2
	11-221	6
	11-221	8
	11-222	21
	11-222	25
	11-222	28
	11-223	37
	11-223	40
	11-223	41
	11-223	42
	11-224	43
	11-224	44
	11-224	46
	11-227	3
	11-227	8
	11-227	9
	11-227	13
	11-227	15
	11-228	23
	11-228	25
	11-229	34
	11-229	35
	11-229	38
	11-229	39
	11-229	42
	11-233	2
	11-233	6
	11-233	8
	11-234	21
	11-234	25
	11-234	28
	11-235	31
	11-235	39
	11-235	40
	11-235	43
	11-235	44
	11-236	45
	11-236	46
	11-236	47
	11-236	49
	11-239	8
	11-239	9
	11-240	14
	11-240	15
	11-240	25
	11-240	26
	11-241	31
	11-241	33
	11-241	37
	11-241	38
	11-241	39
	11-241	40
	11-242	45
	11-242	53
	11-242	56
	11-243	58
	11-243	62
	11-243	66
	11-243	69
	11-244	77
	11-244	79
	11-244	81
	11-244	82
	11-244	83
	11-244	84
	11-245	87
	11-245	89
	11-247	1
	11-248	16
	11-248	18
	11-248	19
	11-248	20
	11-249	25
	11-249	26
	11-249	31
	11-249	33
	11-250	35
	11-250	36
	11-250	37
	11-250	38
	11-253	3
	11-253	8
	11-253	9
	11-253	13
	11-253	15
	11-254	23
	11-254	25
	11-255	36
	11-255	37
	11-255	40
	11-255	41
	11-256	44
	11-259	2
	11-259	6
	11-259	8
	11-260	21
	11-260	23

©2026 HYSTER COMPANY

NUMERICAL INDEX (continued)

PART NO.	PAGE	ITEM
	11-260	26
	11-260	29
	11-261	37
	11-261	38
	11-261	41
	11-261	42
	11-262	43
	11-262	44
	11-262	45
	11-262	47
	11-265	2
	11-265	5
	11-265	6
	11-265	10
	11-265	11
	11-266	18
	11-266	20
	11-267	30
	11-267	31
	11-267	33
	11-271	2
	11-271	6
	11-272	14
	11-272	17
	11-272	19
	11-273	23
	11-273	25
	11-273	27
	11-277	3
	11-277	4
	11-277	6
	11-277	7
	11-277	8
	11-277	9
	11-278	11
	11-278	14
	11-281	3
	11-281	4
	11-282	13
	11-282	14
	11-282	22
	11-282	23
	11-283	25
	11-283	26
	11-283	30
	11-283	32
	11-283	33
	11-287	3
	11-287	4
	11-287	10
	11-287	11
	11-288	19
	11-288	20
	11-288	25
	11-288	28
	11-289	33
	11-289	34
	11-289	37
	11-289	38
	11-293	2
	11-293	6
	11-293	7
	11-293	8
	11-294	13
	11-294	16
	11-294	20
	11-295	27
	11-295	31
	11-296	32
	11-296	33
	11-296	34
	11-296	35
	11-296	37
	11-299	6
	11-299	8
	11-299	10
	11-300	13
	11-300	20
	11-300	21
	11-301	24
	11-301	25
	11-301	26
	11-301	27
	11-301	29
	11-301	32
	11-303	12
	11-307	10
	11-312	13
	11-315	12
	11-321	2
	11-321	5
	11-321	6
	11-321	7
	11-321	8
	11-321	9
	11-321	10
	11-321	11
	11-322	12
	11-323	3
	11-325	2
	11-325	3
	11-329	10
	11-329	11
	11-331	4

NUMERICAL INDEX (continued)

PART NO.	PAGE	ITEM
	11-331	5
	11-331	6
	11-331	8
	11-331	10
	11-334	2
	11-335	1
	11-335	3
	11-336	1
	11-336	2
	11-336	4
	11-336	5
	11-337	1
	11-345	6
	11-347	3
	11-347	8
	11-352	24
	11-355	2
	11-355	3
	11-355	6
	11-363	3
	11-363	6
	11-363	8
	11-364	10
	11-365	3
	11-366	3
	11-367	5
	11-368	5
	11-369	6
	11-371	5
	11-371	6
	11-371	10
	11-373	1
	11-373	3
	11-373	4
	11-374	6
	11-375	1
	11-375	3
	11-375	4
	11-376	6
	11-377	2
	11-383	16
	11-384	24
	11-387	11
	11-388	18
	11-390	2
1330439	11-145	21
	11-158	2
	11-180	16
	11-182	47
	11-188	38
	11-192	26
	11-197	4
	11-199	40
	11-205	32
	11-209	5
	11-211	41
	11-223	42
	11-236	45
	11-249	32
	11-250	38
	11-260	25
	11-262	43
	11-273	24
	11-277	8
	11-281	7
	11-293	10
	11-296	33
	11-301	26
	11-355	6
	11-384	20
1330917	1-119	4
1330919	1-119	8
1330920	1-119	5
1332745	21-4	1
1333382	17-5	32
	17-9	32
	17-17	32
	17-21	32
	17-44	32
	17-50	32
	18-8	6
	18-28	6
	19-10	39
	19-14	39
	20-8	34
	20-26	34
	20-64	34
	20-78	29
1333399	19-23	2
	19-26	23
	20-40	23
	20-43	2
1333840	9-5	6
1334642	15-13	5
1334647	15-13	2
1335129	1-119	2
1335147	1-119	9
1336135	1-78	10
	1-81	15
1337197	11-153	1
	14-11	14
	14-15	15
1337900	19-23	2
	19-26	23
	20-40	23
	20-43	2
1338087	21-4	1
1338088	21-4	1
1338089	21-4	1
1338097	21-4	1
1338098	21-4	1
1338741	16-73	8
1338744	16-73	2
1338916	15-13	24
1338917	15-13	25
1339828	1-119	5
1339832	1-119	2
1344124	10-13	5
1345190	1-9	3
	20-46	20
	20-50	20
	20-89	20
1345690	11-383	4
	11-383	5
	11-387	4
1345939	8-6	27
1346752	16-11	34
	16-15	32
	16-19	35
	16-22	34
1347045	1-5	8
1347202	16-25	16
	16-29	19
1350215	1-53	24
	1-84	2

©2026 HYSTER COMPANY

NUMERICAL INDEX (continued)

PART NO.	PAGE	ITEM
	1-99	7
	11-89	16
	15-35	6
	16-32	5
	16-33	5
	22-50	3
1350273	12-17	9
1350707	16-35	
	16-41	
1351681	11-373	2
	11-375	2
1351689	15-17	9
	15-19	10
1352603	11-145	11
	11-355	1
	11-384	19
1354172	9-8	
	9-12	
	9-16	
	9-18	
	9-22	
1354204	11-345	3
	11-352	22
1354902	18-28	34
	20-30	27
	20-81	27
1355285	18-11	11
1355610	20-14	3
	20-14	3
	20-14	3
	20-69	3
1355626	20-14	3
	20-14	3
	20-69	3
1355643	20-14	3
	20-69	3
1355660	20-14	3
1355711	17-24	3
	17-24	3
	17-24	3
	17-24	3
	17-24	3
	17-24	3
	17-24	3
	17-24	3
	17-24	3
	17-52	3
	18-34	12
	18-34	12
	18-34	12
	18-34	12
	18-34	12
	18-34	12
	18-34	12
	18-37	12
1355713	18-11	4
	18-16	5
	18-19	5
	18-30	4
	18-34	5
	18-37	5
1355837	17-24	3
	17-52	3
1356037	20-14	3
	20-69	3
1356747	18-11	3
	18-16	3
	18-30	3
	18-34	3
1356748	17-24	12
	17-52	12
	18-16	4
	18-19	4
	18-34	4
	18-37	4
	20-32	12
	20-84	12
1356749	17-12	14
	17-24	14
	17-46	14
	17-52	14
	20-15	14
	20-33	14
	20-70	14
	20-84	14
1356750	17-12	11
	17-46	11
	20-14	11
	20-70	11
1356751	17-24	11
	17-52	11
	18-19	14
	18-38	14
	20-32	11
	20-84	11
1356752	17-12	14
	17-24	14
	17-46	14
	17-52	14
	20-33	14
	20-84	14
1358179	13-22	1
1358183	13-23	1
1358972	18-42	10
	20-17	10
	20-72	10
1359482	14-22	3
1359562	22-30	1
1360127	17-12	12
	17-46	12
	20-14	12
	20-70	12
1360128	17-12	
	17-46	
1360129	17-12	
	17-46	
1360131	17-24	
	17-52	
	18-38	
1360132	17-24	
	17-52	
1360386	16-81	26
	16-85	24
	18-55	1
	18-63	1
	19-29	7
	19-31	7
1360796	15-13	8
1360797	15-13	9
1361302	18-41	5
	20-17	5
	20-35	5
	20-71	5
	20-85	5
1361502	15-13	28
1361504	15-13	4
1361507	15-13	8
1361557	11-149	8
	11-151	10
1362880	19-21	5
1362881	19-21	10
1363886	11-295	27
	11-384	22
	11-388	16
1374705	22-28	8
1375048	15-14	
1375214	1-5	5
1375391	15-17	13
	15-19	11
1375486	13-3	18
1375492	13-3	21
1377998	11-7	1
	11-9	1
1378031	11-13	1
1378537	15-9	8
1378691	17-5	36
	17-9	36
	17-17	36
	20-8	28
	20-26	28
	20-78	28
1379063	19-17	3
1379064	19-17	4
	19-18	6
1379455	9-11	25
1379595	10-3	13
	10-5	8
1380570	17-12	13
	17-24	13
	17-46	13
	17-52	13
	20-32	13
	20-84	13
1381063	17-12	10
	17-24	10
	17-46	10
	17-52	10
	20-32	10
	20-84	10
1381064	17-12	10
	17-46	10
	20-14	10
	20-70	10
1381066	19-17	5
	19-18	7
1381078	16-73	8
1381082	16-73	5
1381083	16-73	5
1381095	18-11	5
	18-16	6
	18-19	6
	18-30	5
	18-34	6
	18-37	6
1382313	11-66	2
	11-66	11

NUMERICAL INDEX (continued)

PART NO.	PAGE	ITEM
	11-67	12
	11-67	13
1383062	16-73	4
1383063	16-73	4
	17-12	16
	17-24	16
	17-46	16
	17-52	16
	20-15	16
	20-33	16
	20-70	16
	20-84	16
1383064	17-12	16
	17-24	16
	17-29	7
	17-46	16
	17-52	16
	18-45	7
	19-25	8
	20-33	16
	20-39	8
	20-84	16
1383065	17-31	7
	18-45	7
	19-17	11
	19-18	13
	19-25	8
	20-39	8
1383331	11-17	1
1383775	14-3	10
	14-7	13
1383777	14-3	11
	14-7	11
1384967	15-17	18
1388838	14-4	40
	14-8	54
1394008	2-3	18
	2-17	6
1395169	19-23	2
	19-26	23
	20-40	23
	20-43	2
1397326	11-91	12
1398062	1-13	23
	1-17	18
	1-23	23
	1-57	16
	1-61	16
	1-65	32
	1-67	32
	1-69	27
	2-9	16
	8-3	18
	8-5	5
	10-3	24
	10-5	27
	11-145	7
	16-7	14
	16-9	14
	16-87	6
	16-89	12
	16-91	4
	16-93	4
	16-97	13
	16-99	13
	16-121	22
	16-123	22
	17-39	12
	18-53	20
	18-56	20
	18-61	20
	18-64	20
	22-24	5
1398099	9-7	30
	9-11	17
	9-15	20
	9-21	28
1399398	11-59	7
	11-62	5
	11-62	10
	22-49	21
1402414	9-7	9
	9-21	12
1402620	11-181	42
	11-187	33
	11-198	18
	11-211	37
	11-222	15
	11-233	15
	11-243	70
	11-249	29
	11-260	15
	11-273	32
	11-295	24
	11-299	3
1402814	11-331	9
1402815	11-385	43
	11-388	35
1402823	11-383	13
	11-383	14
	11-384	27
	11-387	9
	11-387	10
	11-388	20
1402865	11-303	10
	11-307	9
	11-311	12
	11-315	11
1402868	11-181	30
	11-187	26
	11-197	7
	11-209	10
	11-221	4
	11-233	4
	11-242	54
	11-248	24
	11-259	4
	11-272	15
	11-284	39
	11-288	23
1402888	11-166	17
	11-174	15
	11-199	35
	11-223	35
	11-235	37
	11-261	35
	11-295	28
	11-331	3
	11-343	5
1402908	11-303	9
	11-307	8
	11-311	9
	11-315	9
	11-351	11
	11-352	12
1402923	11-316	4
	11-319	2
	11-359	5
	11-360	2
	11-364	13
	11-365	4
	11-367	6
	11-369	7
	11-371	7
1454967	11-83	18

See Service Manual for service procedures.

©2026 HYSTER COMPANY

NUMERICAL INDEX (continued)

PART NO.	PAGE	ITEM
	11-89	3
1459011	8-9	8
1460477	7-3	20
	7-5	7
	7-11	14
	7-13	11
	10-3	20
	10-5	9
	13-32	5
	22-49	9
1462439	2-3	14
	2-5	4
	2-7	7
1462441	2-5	2
	2-7	8
1462442	2-5	5
	2-15	5
1462617	13-23	1
1463104	18-11	6
	18-16	7
	18-19	7
	18-30	6
	18-34	7
	18-37	7
1463105	19-21	3
1463108	20-17	11
	20-35	11
	20-72	11
	20-86	11
1463138	11-142	1
	11-156	1
	11-170	26
	11-174	23
	11-255	33
	11-267	28
	11-316	3
	11-364	11
	11-369	9
	11-371	9
	11-374	5
	11-376	5
	11-380	2
	11-390	3
	22-43	13
	22-45	13
1463139	11-162	17
	11-166	19
	11-173	4
	11-180	18
	11-180	25
	11-181	33
	11-182	44
	11-182	48
	11-186	16
	11-186	21
	11-187	28
	11-188	39
	11-188	48
	11-191	4
	11-192	14
	11-192	27
	11-193	30
	11-193	34
	11-193	38
	11-198	28
	11-198	29
	11-199	32
	11-199	37
	11-200	44
	11-203	5
	11-204	18
	11-205	34
	11-205	38
	11-205	42
	11-206	45
	11-206	47
	11-210	18
	11-211	29
	11-211	38
	11-212	47
	11-215	4
	11-216	15
	11-216	28
	11-217	31
	11-217	35
	11-217	38
	11-217	39
	11-217	46
	11-222	23
	11-222	29
	11-223	33
	11-223	34
	11-223	39
	11-224	46
	11-227	6
	11-228	17
	11-229	33
	11-229	36
	11-229	40
	11-229	43
	11-230	44
	11-230	51
	11-234	23
	11-234	29
	11-235	35
	11-235	36
	11-235	42
	11-236	49
	11-239	7
	11-239	11
	11-240	18
	11-240	23
	11-241	35
	11-241	41
	11-241	43
	11-242	46
	11-242	51
	11-242	52
	11-243	61
	11-243	68

NUMERICAL INDEX (continued)

PART NO.	PAGE	ITEM
	11-244	80
	11-245	89
	11-248	17
	11-248	21
	11-249	34
	11-250	39
	11-250	48
	11-253	6
	11-254	17
	11-255	35
	11-255	38
	11-255	42
	11-256	45
	11-256	46
	11-256	53
	11-260	27
	11-261	33
	11-261	34
	11-261	40
	11-262	47
	11-265	3
	11-266	12
	11-266	17
	11-267	29
	11-267	32
	11-271	3
	11-271	5
	11-271	7
	11-272	12
	11-272	13
	11-272	22
	11-277	5
	11-278	14
	11-281	1
	11-281	5
	11-282	20
	11-283	27
	11-283	34
	11-284	36
	11-288	18
	11-288	21
	11-289	27
	11-289	36
	11-293	3
	11-293	11
	11-294	18
	11-295	30
	11-296	37
	11-299	9
	11-300	14
	11-300	16
	11-300	17
	11-300	23
	11-301	32
	11-303	2
	11-303	4
	11-303	11
	11-307	2
	11-307	4
	11-311	2
	11-311	4
	11-311	6
	11-315	2
	11-315	4
	11-315	6
	11-316	2
	11-323	2
	11-331	1
	11-331	11
	11-343	2
	11-343	3
	11-343	6
	11-355	5
	11-363	2
	11-363	5
	11-363	7
	11-365	1
	11-365	2
	11-366	1
	11-366	2
	11-366	4
	11-368	1
	11-368	2
	11-368	4
	11-371	1
	11-371	2
	11-371	4
	11-380	1
1463140	16-109	9
	16-111	11
	16-114	11
	16-116	11
	16-119	11
1463141	11-145	12
	11-338	4
	11-338	5
	11-338	6
	11-340	1
	11-340	2
	11-340	3
	11-351	3
1463180	11-191	5
	11-193	35
	11-203	4
	11-205	41

©2026 HYSTER COMPANY

NUMERICAL INDEX (continued)

PART NO.	PAGE	ITEM
	11-210	28
	11-283	28
	11-283	35
	11-294	19
	11-303	3
	11-307	3
	11-311	3
	22-43	13
	22-45	13
1463184	11-156	1
	11-180	24
	11-181	32
	11-193	31
	11-193	39
	11-199	33
	11-205	37
	11-206	46
	11-210	17
	11-281	2
	11-293	4
	11-293	12
	11-303	1
	11-307	1
	11-311	1
	11-369	9
	11-371	9
1463189	11-180	25
	11-181	33
	11-186	21
	11-187	28
	11-193	30
	11-193	38
	11-199	32
	11-205	38
	11-206	47
	11-210	18
	11-217	31
	11-217	39
	11-222	29
	11-223	39
	11-229	36
	11-229	44
	11-234	29
	11-235	42
	11-239	11
	11-241	43
	11-243	61
	11-244	80
	11-248	21
	11-249	34
	11-255	38
	11-256	46
	11-260	27
	11-261	40
	11-267	32
	11-271	5
	11-272	22
	11-277	5
	11-281	1
	11-288	21
	11-289	27
	11-293	3
	11-293	11
	11-300	14
	11-300	23
	11-303	2
	11-307	2
	11-311	2
	11-315	2
	11-323	2
1463191	11-191	5
	11-193	35
	11-205	41
	11-210	28
	11-283	28
	11-284	35
	11-294	19
	11-303	3
	11-307	3
	11-311	3
	11-311	5
	22-43	13
	22-45	13
1463193	11-156	1
	11-180	24
	11-181	32
	11-193	31
	11-194	39
	11-199	33
	11-205	37
	11-206	46
	11-210	17
	11-281	2
	11-293	4
	11-294	12
	11-303	1
	11-307	1
	11-311	1
	11-369	9
	11-371	9
1463194	11-334	2
1463196	11-180	25
	11-181	33
	11-186	21
	11-187	28
	11-193	30
	11-193	38
	11-199	32
	11-205	38

NUMERICAL INDEX (continued)

PART NO.	PAGE	ITEM
	11-206	47
	11-210	18
	11-217	31
	11-217	39
	11-222	29
	11-223	39
	11-229	36
	11-230	44
	11-234	29
	11-235	42
	11-239	11
	11-241	43
	11-243	61
	11-244	80
	11-248	21
	11-249	34
	11-255	38
	11-256	46
	11-260	27
	11-261	40
	11-267	32
	11-271	5
	11-272	22
	11-277	5
	11-281	1
	11-288	21
	11-289	27
	11-293	3
	11-293	11
	11-300	14
	11-300	23
	11-303	2
	11-307	2
	11-311	2
	11-315	2
	11-323	2
1463912	22-30	4
	22-32	4
	22-34	5
1464001	18-42	11
	20-17	11
	20-35	11
1467150	14-9	6
1468841	11-170	18
	11-170	19
	11-174	18
	11-174	19
1471591	13-22	1
1471829	13-22	1
1471832	14-24	1
1471835	13-23	1
1471837	14-24	1
1473887	12-13	18
	15-43	13
	16-5	3
	16-5	6
	16-69	10
	16-71	10
	16-75	10
	16-77	11
1473888	19-9	27
	19-13	27
1473897	15-21	8
	15-23	3
	15-25	30
1474893	1-67	38
1476077	11-383	6
	11-387	5
1476421	1-27	12
	11-109	7
	11-110	14
	11-112	11
	11-345	11
1479109	11-165	5
	11-187	31
	11-198	14
	11-221	11
	11-233	11
	11-249	28
	11-259	11
	11-295	25
1480237	1-53	8
	1-57	15
	1-61	15
	1-65	26
	1-67	26
	1-69	29
	1-76	6
	1-77	14
	1-78	8
	1-81	14
	1-82	10
	1-95	20
	6-2	3
	6-3	3
	6-9	25
	6-11	19
	7-19	18
	7-21	18
	7-23	19
	8-3	25
	8-5	3
	10-3	18
	10-5	30
	11-7	8
	11-9	8
	11-13	8
	11-17	8
	11-21	3
	11-23	2
	11-27	2
	11-29	21
	11-31	8
	11-33	24
	11-37	21
	11-39	24
	11-43	22
	11-47	22
	11-53	4
	11-55	4
	11-59	2
	11-61	2
	11-62	3
	11-65	2
	11-73	15
	11-76	15
	11-81	5
	11-83	16
	11-85	10
	11-87	8
	11-89	10
	11-91	17
	11-97	5
	11-99	5
	11-102	3
	11-107	2
	11-113	3
	15-5	1
	15-9	18
	15-25	23
	15-29	21
	15-31	19
	15-38	2
	16-7	3
	16-9	3
	16-11	15
	16-15	17
	16-19	7
	16-22	19
	16-22	31
	16-25	15
	16-29	3
	16-69	7
	16-71	7
	16-81	22

©2026 HYSTER COMPANY

NUMERICAL INDEX (continued)

PART NO.	PAGE	ITEM
	16-85	20
	16-89	9
	16-93	17
	16-97	9
	16-99	9
	16-101	21
	16-103	25
	16-105	28
	16-107	29
	16-109	23
	16-111	27
	16-114	33
	16-116	25
	16-119	28
	16-121	18
	16-123	18
	22-49	27
1480242	11-388	18
1480243	11-388	18
1481090	18-8	8
	18-28	8
1481348	19-14	56
1482177	19-4	26
1482668	11-383	4
	11-387	3
1483661	22-74	4
1483663	22-74	3
1483664	22-74	2
1484377	11-142	1
	11-145	11
	11-145	12
	11-145	19
	11-161	10
	11-162	17
	11-165	11
	11-166	19
	11-169	1
	11-169	5
	11-170	26
	11-173	1
	11-173	5
	11-174	23
	11-179	6
	11-180	19
	11-180	24
	11-181	32
	11-181	33
	11-181	34
	11-182	44
	11-182	45
	11-182	48
	11-185	5
	11-186	17
	11-187	28
	11-187	29
	11-188	35
	11-188	36
	11-188	39
	11-191	5
	11-191	9
	11-191	12
	11-192	15
	11-193	30
	11-193	31
	11-193	35
	11-194	39
	11-198	19
	11-198	27
	11-199	31
	11-199	33
	11-199	37
	11-200	44
	11-203	4
	11-203	12
	11-203	16
	11-204	17
	11-204	26
	11-205	37
	11-205	38
	11-206	44
	11-206	46
	11-210	17
	11-210	19
	11-211	28
	11-211	31
	11-211	38
	11-212	47
	11-215	9
	11-215	13
	11-222	25
	11-222	28
	11-223	33
	11-223	34
	11-223	37
	11-223	39
	11-224	46
	11-227	11
	11-227	15
	11-228	24
	11-228	25
	11-234	25
	11-234	28
	11-235	35
	11-235	36
	11-235	40
	11-235	42
	11-236	49
	11-239	8
	11-240	14
	11-240	16
	11-240	25
	11-240	28

NUMERICAL INDEX (continued)

PART NO.	PAGE	ITEM
	11-242	51
	11-242	52
	11-243	62
	11-243	66
	11-244	79
	11-244	80
	11-245	89
	11-247	5
	11-248	18
	11-249	33
	11-249	34
	11-250	35
	11-250	36
	11-250	39
	11-253	11
	11-254	15
	11-254	24
	11-254	25
	11-255	33
	11-260	23
	11-260	26
	11-261	33
	11-261	34
	11-261	38
	11-261	40
	11-262	47
	11-265	9
	11-265	11
	11-266	19
	11-266	20
	11-267	28
	11-267	30
	11-272	12
	11-272	13
	11-273	23
	11-273	25
	11-277	4
	11-277	5
	11-278	14
	11-281	1
	11-281	2
	11-282	13
	11-282	15
	11-282	21
	11-282	22
	11-283	24
	11-283	28
	11-284	35
	11-284	37
	11-287	2
	11-287	4
	11-287	9
	11-287	11
	11-288	19
	11-293	4
	11-294	12
	11-294	13
	11-294	16
	11-294	19
	11-295	30
	11-296	37
	11-299	10
	11-300	13
	11-300	16
	11-300	17
	11-300	21
	11-300	23
	11-301	32
	11-303	1
	11-303	3
	11-307	1
	11-307	3
	11-311	1
	11-311	3
	11-311	5
	11-321	2
	11-321	4
	11-323	2
	11-331	1
	11-331	11
	11-334	1
	11-337	1
	11-343	4
	11-351	5
	11-351	6
	11-355	1
	11-355	2
	11-355	5
	11-359	5
	11-360	2
	11-363	2
	11-363	4
	11-363	7
	11-363	8
	11-363	9
	11-364	11
	11-364	13
	11-365	1
	11-365	2
	11-365	4
	11-365	5
	11-366	1
	11-366	4
	11-367	6
	11-367	7

©2026 HYSTER COMPANY

NUMERICAL INDEX (continued)

PART NO.	PAGE	ITEM
	11-368	1
	11-368	4
	11-369	7
	11-369	9
	11-371	1
	11-371	4
	11-371	6
	11-371	7
	11-371	9
	11-373	4
	11-374	5
	11-375	3
	11-376	4
	11-376	5
	11-380	1
	11-380	2
	11-383	16
	11-384	19
	11-387	11
1484555	11-169	2
	11-173	2
	11-179	9
	11-185	8
	11-192	18
	11-204	21
	11-216	19
	11-228	21
	11-240	21
	11-247	8
	11-254	21
	11-266	15
	11-266	15
	11-282	17
	11-287	7
	11-304	13
	11-307	11
	11-345	5
	11-347	4
	11-352	23
1484557	11-173	4
	11-180	18
	11-186	16
	11-191	14
	11-192	27
	11-204	18
	11-205	34
	11-206	45
	11-215	15
	11-216	28
	11-217	38
	11-228	17
	11-229	33
	11-229	43
	11-239	7
	11-240	23
	11-242	46
	11-248	17
	11-254	17
	11-255	35
	11-256	45
	11-266	12
	11-267	29
	11-271	7
	11-281	5
	11-282	20
	11-284	36
	11-288	18
	11-343	2
	11-343	3
	11-343	6
	11-363	5
	11-366	2
	11-368	2
	11-371	2
1484558	11-173	4
	11-180	18
	11-186	16
	11-191	14
	11-192	27
	11-204	18
	11-205	34
	11-206	45
	11-216	15
	11-216	28
	11-217	38
	11-228	17
	11-229	33
	11-229	43
	11-239	7
	11-240	23
	11-242	46
	11-248	17
	11-254	17
	11-255	35
	11-256	45
	11-266	12
	11-267	29
	11-271	7
	11-281	5
	11-282	20
	11-284	36
	11-288	18
	11-343	2
	11-343	3

NUMERICAL INDEX (continued)

PART NO.	PAGE	ITEM
	11-343	6
	11-363	5
	11-366	2
	11-368	2
	11-371	2
1484709	11-384	20
	11-388	15
1486558	16-81	9
	16-85	9
1486559	16-81	5
	16-85	5
1486566	14-8	35
1486579	16-29	23
1486737	15-23	20
	15-25	21
	15-33	14
	16-77	10
	16-81	6
	16-85	6
1486738	15-9	11
	15-23	5
	15-25	22
	15-33	10
	15-35	9
	16-32	3
	16-33	3
	16-77	7
1486739	15-43	11
1486740	10-3	19
	10-5	10
	15-25	43
	15-43	12
	16-7	21
	16-9	21
	16-121	17
	16-123	17
	19-14	57
	22-74	1
1486742	15-25	29
	16-79	9
	16-79	13
	16-121	4
	22-23	5
1486745	16-7	10
	16-7	21
	16-9	10
	16-9	21
	16-77	15
	16-81	11
	16-85	11
1486746	15-25	40
	15-29	4
	15-31	5
1486749	16-69	9
	16-71	9
	18-3	8
	18-23	8
	19-9	26
	19-13	26
1486751	16-25	21
	16-29	10
1486770	15-21	18
	15-23	21
1486772	15-29	7
1487058	15-9	10
	15-21	1
	15-23	4
	15-25	35
	15-33	5
	15-35	10
	16-19	6
	16-22	6
	16-25	5
	16-29	11
	16-75	5
	16-77	3
	16-79	5
	16-121	16
	16-123	16
1487059	15-9	11
	16-32	2
1487061	15-25	28
	16-81	4
	16-85	4
1487063	16-81	10
	16-85	10
1487065	16-29	22
1487067	12-17	20
	15-3	16
	16-11	3
	16-15	3
	16-19	5
	16-22	5
	16-25	13
	16-29	17
1487073	16-19	3
	16-22	3
	16-25	20
	16-29	7
1487095	15-25	42
1487118	1-57	40
	1-61	40
	1-65	40
	1-67	40
	1-69	11
1487122	1-57	42
	1-61	42
	1-65	42
	1-67	42
	1-69	10
	1-71	2
1487125	1-71	3
1489655	11-176	1
	11-198	27
	11-323	1
	11-331	2
	11-334	1
	11-364	12
	11-365	5
	11-367	7
	11-369	8
	11-371	8
	22-28	8
1489656	11-161	4
	11-161	13
	11-165	3
	11-166	15
	11-169	3
	11-169	5
	11-173	3
	11-173	5
	11-179	1
	11-180	20
	11-181	41
	11-182	45
	11-185	1
	11-186	18
	11-187	32
	11-187	35
	11-188	36
	11-191	6
	11-191	10
	11-193	29
	11-198	26
	11-199	38
	11-203	3
	11-203	14
	11-205	36
	11-210	21
	11-211	32
	11-211	39
	11-215	6
	11-215	11
	11-216	30
	11-222	21

©2026 HYSTER COMPANY

NUMERICAL INDEX (continued)

PART NO.	PAGE	ITEM
	11-223	37
	11-223	40
	11-227	8
	11-227	13
	11-229	35
	11-234	21
	11-235	39
	11-235	40
	11-235	43
	11-239	9
	11-240	26
	11-241	33
	11-243	69
	11-244	77
	11-244	79
	11-244	81
	11-247	1
	11-248	16
	11-249	31
	11-250	35
	11-250	36
	11-253	8
	11-253	13
	11-255	37
	11-260	21
	11-261	37
	11-261	38
	11-261	41
	11-265	2
	11-265	10
	11-267	31
	11-273	27
	11-277	3
	11-277	4
	11-277	6
	11-281	3
	11-282	23
	11-283	26
	11-287	3
	11-288	20
	11-288	25
	11-289	37
	11-293	6
	11-294	20
	11-295	27
	11-295	31
	11-299	8
	11-300	20
	11-300	21
	11-300	24
	11-355	2
	11-355	7
	11-363	8
	11-374	6
	11-376	6
1489657	11-161	4
	11-161	13
	11-165	3
	11-166	15
	11-169	3
	11-169	5
	11-173	3
	11-173	5
	11-179	1
	11-180	20
	11-181	41
	11-182	45
	11-185	1
	11-186	18
	11-187	32
	11-188	35
	11-188	36
	11-191	6
	11-191	10
	11-193	29
	11-197	1
	11-198	26
	11-199	38
	11-200	41
	11-203	3
	11-203	14
	11-205	36
	11-209	4
	11-210	21
	11-211	32
	11-211	39
	11-212	42
	11-215	6
	11-215	11
	11-216	30
	11-222	21
	11-223	37
	11-223	40
	11-224	43
	11-227	8
	11-227	13
	11-229	35
	11-234	21
	11-235	39
	11-235	40
	11-235	43
	11-236	46
	11-239	9
	11-240	26
	11-241	33

NUMERICAL INDEX (continued)

PART NO.	PAGE	ITEM
	11-243	69
	11-244	77
	11-244	79
	11-244	81
	11-244	84
	11-247	1
	11-248	16
	11-249	31
	11-250	35
	11-250	36
	11-253	8
	11-253	13
	11-255	37
	11-260	21
	11-261	37
	11-261	38
	11-261	41
	11-262	44
	11-265	2
	11-265	10
	11-267	31
	11-273	27
	11-277	3
	11-277	4
	11-277	6
	11-277	9
	11-281	3
	11-282	23
	11-283	26
	11-287	3
	11-288	20
	11-288	25
	11-289	37
	11-293	6
	11-293	8
	11-294	20
	11-295	27
	11-295	31
	11-296	34
	11-299	8
	11-300	20
	11-300	21
	11-301	24
	11-301	27
	11-355	2
	11-355	7
	11-363	8
	11-374	6
	11-376	6
1490242	11-145	13
	11-156	4
	11-157	1
	11-169	4
	11-170	23
	11-174	20
	11-176	2
	11-176	3
	11-180	21
	11-180	28
	11-181	29
	11-182	46
	11-186	19
	11-186	24
	11-187	25
	11-188	37
	11-191	7
	11-193	32
	11-194	41
	11-197	5
	11-197	9
	11-197	11
	11-199	39
	11-203	2
	11-205	39
	11-206	43
	11-209	9
	11-209	12
	11-209	14
	11-211	40
	11-215	7
	11-217	33
	11-217	37
	11-221	2
	11-221	6
	11-221	8
	11-223	41
	11-227	9
	11-229	38
	11-229	42
	11-233	2
	11-233	6
	11-233	8
	11-235	44
	11-241	31
	11-241	38
	11-241	39
	11-242	45
	11-242	53
	11-242	56
	11-242	58
	11-244	82
	11-248	19
	11-249	25
	11-249	26

©2026 HYSTER COMPANY

NUMERICAL INDEX (continued)

PART NO.	PAGE	ITEM
	11-250	37
	11-253	9
	11-255	40
	11-255	44
	11-259	2
	11-259	6
	11-259	8
	11-261	42
	11-265	1
	11-265	6
	11-267	33
	11-271	6
	11-272	14
	11-272	17
	11-272	19
	11-277	7
	11-283	25
	11-283	32
	11-289	33
	11-289	38
	11-295	32
	11-299	6
	11-301	25
	11-303	12
	11-307	10
	11-312	13
	11-315	12
	11-321	5
	11-321	6
	11-321	7
	11-321	8
	11-321	9
	11-321	10
	11-321	11
	11-321	12
	11-323	3
	11-331	4
	11-331	5
	11-331	6
	11-331	8
	11-331	10
	11-345	6
	11-347	2
	11-347	8
	11-351	4
	11-352	24
	11-355	3
	11-363	3
	11-363	6
	11-365	3
	11-366	3
	11-366	5
	11-368	3
	11-368	5
	11-371	3
	11-371	5
	11-371	10
	11-373	1
	11-375	1
	11-384	22
	11-384	24
	11-388	16
1490243	11-145	13
	11-156	4
	11-157	1
	11-169	4
	11-170	23
	11-174	20
	11-176	2
	11-176	3
	11-180	21
	11-180	23
	11-180	28
	11-181	29
	11-182	46
	11-186	19
	11-186	20
	11-186	24
	11-187	25
	11-188	37
	11-191	7
	11-193	32
	11-193	33
	11-193	36
	11-194	41
	11-197	5
	11-197	9
	11-197	11
	11-199	39
	11-200	42
	11-203	2
	11-205	39
	11-205	40
	11-206	43
	11-209	9
	11-209	12
	11-209	14
	11-211	40
	11-212	44
	11-215	7
	11-217	33
	11-217	34
	11-217	37
	11-221	2

NUMERICAL INDEX (continued)

PART NO.	PAGE	ITEM
	11-221	6
	11-221	8
	11-223	41
	11-224	44
	11-227	9
	11-229	38
	11-229	39
	11-229	42
	11-233	2
	11-233	6
	11-233	8
	11-235	44
	11-236	47
	11-241	31
	11-241	38
	11-241	39
	11-241	40
	11-242	45
	11-242	53
	11-242	56
	11-243	58
	11-244	82
	11-245	87
	11-248	19
	11-248	20
	11-249	25
	11-249	26
	11-250	37
	11-253	9
	11-255	40
	11-255	41
	11-255	44
	11-259	2
	11-259	6
	11-259	8
	11-261	42
	11-262	45
	11-265	1
	11-265	6
	11-267	33
	11-271	2
	11-271	6
	11-272	14
	11-272	17
	11-272	19
	11-277	7
	11-278	11
	11-283	25
	11-283	32
	11-283	33
	11-289	33
	11-289	38
	11-296	32
	11-296	35
	11-299	6
	11-301	25
	11-301	29
	11-303	12
	11-307	10
	11-312	13
	11-315	12
	11-321	5
	11-321	6
	11-321	7
	11-321	8
	11-321	9
	11-321	10
	11-321	11
	11-321	12
	11-323	3
	11-325	2
	11-325	3
	11-329	10
	11-329	11
	11-331	4
	11-331	5
	11-331	6
	11-331	8
	11-331	10
	11-335	1
	11-335	3
	11-336	1
	11-336	2
	11-336	4
	11-336	5
	11-345	6
	11-347	2
	11-347	8
	11-351	4
	11-352	24
	11-355	3
	11-363	3
	11-363	6
	11-365	3
	11-366	3
	11-366	5
	11-368	3
	11-368	5
	11-371	3
	11-371	5
	11-371	10
	11-373	1
	11-375	1
	11-377	2

©2026 HYSTER COMPANY

NUMERICAL INDEX (continued)

PART NO.	PAGE	ITEM
	11-384	22
	11-384	24
	11-388	16
	11-390	2
1490617	10-11	5
1492644	16-73	
1493428	11-181	34
	11-187	29
	11-198	19
	11-199	31
	11-210	19
	11-211	31
	11-222	25
	11-222	28
	11-234	25
	11-234	28
	11-243	62
	11-243	66
	11-249	33
	11-260	23
	11-260	26
	11-273	23
	11-273	25
	11-294	13
	11-294	16
	11-299	10
	11-299	13
1493430	11-161	10
	11-165	11
	11-169	1
	11-169	11
	11-173	1
	11-173	10
	11-180	19
	11-186	17
	11-191	12
	11-193	28
	11-203	16
	11-205	35
	11-209	2
	11-215	13
	11-216	29
	11-227	15
	11-228	23
	11-229	34
	11-234	31
	11-239	8
	11-240	15
	11-240	25
	11-248	18
	11-253	15
	11-254	23
	11-255	36
	11-260	29
	11-265	11
	11-266	18
	11-267	30
	11-281	4
	11-282	14
	11-282	22
	11-287	4
	11-287	10
	11-288	19
	11-289	28
	11-293	2
	11-293	7
	11-321	2
	11-351	6
	11-363	10
	11-369	6
	11-373	3
	11-375	3
	11-383	16
	11-387	11
1493434	11-181	35
	11-187	30
	11-199	30
	11-210	20
	11-222	27
	11-234	27
	11-243	63
	11-249	32
	11-260	25
	11-273	24
	11-294	14
	11-299	12
1493462	11-188	48
	11-191	4
	11-193	34
	11-198	28
	11-198	29
	11-203	5
	11-205	42
	11-211	29
	11-215	4
	11-217	35
	11-217	46
	11-222	23
	11-227	6
	11-229	40
	11-230	51
	11-234	23
	11-241	35
	11-241	41
	11-243	68

NUMERICAL INDEX (continued)

PART NO.	PAGE	ITEM
	11-250	48
	11-253	6
	11-255	42
	11-256	53
	11-265	3
	11-271	3
	11-283	27
	11-283	34
	11-289	26
	11-289	36
	11-294	18
	11-299	9
	11-303	4
	11-307	4
	11-311	4
	11-315	4
	11-338	4
	11-338	5
	11-338	6
	11-340	1
	11-340	2
	11-340	3
1493464	11-188	48
	11-191	4
	11-193	34
	11-198	28
	11-198	29
	11-203	5
	11-205	42
	11-211	29
	11-215	4
	11-217	35
	11-217	46
	11-222	23
	11-227	6
	11-229	40
	11-230	51
	11-234	23
	11-241	35
	11-241	41
	11-243	68
	11-250	48
	11-253	6
	11-255	42
	11-256	53
	11-265	3
	11-271	3
	11-283	27
	11-283	34
	11-289	36
	11-294	18
	11-299	9
	11-303	4
	11-303	4
	11-307	4
	11-307	4
	11-311	4
	11-311	6
	11-315	4
	11-315	6
	11-338	4
	11-338	5
	11-338	6
	11-340	1
	11-340	2
	11-340	3
1493465	11-153	3
	11-157	2
	11-200	43
	11-212	43
	11-224	45
	11-236	48
	11-245	88
	11-262	46
	11-277	10
	11-296	36
	11-301	28
	11-335	2
	11-336	3
	11-347	5
	11-351	2
	11-351	10
	11-351	10
1494017	19-29	14
	19-32	14
1494888	22-59	15
1495880	17-35	9
1495893	17-35	14
1495894	17-35	16
1495898	17-35	10
1495901	17-35	12
1495921	17-35	11
1496922	18-11	
	18-16	
	18-30	
	18-34	
1498044	11-81	8
	11-162	28
	11-166	26
	11-170	30
	11-174	28
	11-383	9
1498045	11-81	9
	11-343	8
1498046	11-81	10
	11-175	32
	11-332	15
	11-337	2
1498047	11-81	11
	11-288	26
1500782	21-5	4
1500784	21-5	4
1500899	11-174	27
	11-182	51
	11-304	19
	11-308	17
1500900	11-53	20

See Service Manual for service procedures.
©2026 HYSTER COMPANY

NUMERICAL INDEX (continued)

PART NO.	PAGE	ITEM
	11-170	28
	11-312	19
	11-315	5
1500901	11-188	44
	11-250	44
	11-274	37
	11-345	8
	11-347	10
	11-352	27
	11-385	42
	11-388	34
1500912	1-103	16
	1-113	5
	1-117	5
	6-6	37
	10-13	6
	11-21	6
	11-51	9
	11-55	12
	11-62	6
	11-83	9
	11-85	3
	11-87	3
	11-89	6
	11-91	3
	11-97	6
	11-97	6
	11-99	3
	11-109	9
	11-110	8
	11-112	4
	11-120	7
	11-142	2
	11-151	9
	11-153	5
	11-347	16
	11-352	16
	22-32	8
	22-34	9
	22-45	18
	22-49	24
	22-53	9
	22-55	17
	22-57	20
1500913	11-181	34
	11-187	29
	11-198	19
	11-199	31
	11-210	19
	11-211	31
	11-222	25
	11-222	28
	11-234	25
	11-234	28
	11-243	62
	11-243	66
	11-249	33
	11-260	23
	11-260	26
	11-273	23
	11-273	25
	11-294	13
	11-294	16
	11-299	10
	11-300	13
1500925	11-145	11
	11-355	1
	11-384	19
1501888	2-20	2
1501994	9-5	1
1502003	15-5	5
	15-9	14
1502006	15-3	7
1502053	1-89	11
	10-3	10
	15-23	18
	15-25	39
	15-29	25
	15-31	23
	16-7	16
	16-9	16
	16-87	17
	16-91	16
	16-93	16
1502054	16-7	18
	16-87	18
	16-91	12
	16-93	12
1502055	8-3	21
	11-83	3
	11-91	10
	11-329	16
	11-345	13
	11-347	21
	11-352	29
	16-5	8
1502056	1-82	16
	11-91	5
	11-99	10
1502057	1-57	35
	1-65	37
	16-11	17
	16-15	19
	16-19	38
	16-22	38
	16-26	48
	16-75	14
	16-77	20
	16-91	15
	16-93	15
1502059	11-91	6
	11-345	14
	11-348	24
	11-353	30
	15-25	36
	15-29	24
	15-31	24
1502061	1-82	18
	9-3	27
	10-3	32
	11-53	21
	11-83	5
	22-55	16
	22-57	17
1502066	10-9	7
	11-91	7
	15-25	37
	15-29	23
	15-31	22
	16-7	19
	16-9	19
	16-29	37
	16-87	16
	16-89	26
	16-91	13
	16-93	13
	16-97	18
	22-26	6
1502276	14-3	17
	14-7	9
1502422	13-3	11
1502543	1-13	27
	1-17	22
	1-23	27
	1-53	21
	1-87	4
	1-103	13
	4-33	3
	7-3	14
	7-5	13
	7-11	21
	7-13	20
	9-3	22
	10-3	3
	10-5	3
	10-9	2
	10-13	4
	11-7	5
	11-9	5

NUMERICAL INDEX (continued)

PART NO.	PAGE	ITEM
	11-13	5
	11-17	5
	11-73	21
	11-76	21
	11-91	19
	11-97	14
	11-145	1
	11-353	36
	15-5	1
	15-9	18
	16-105	27
	16-107	30
	16-114	28
	16-119	26
	22-62	3
1502625	11-371	6
1502626	11-203	8
	11-204	24
	11-204	26
	11-227	3
	11-228	25
	11-239	14
	11-241	37
	11-253	3
	11-254	25
	11-265	5
	11-266	20
	11-282	13
	11-283	30
	11-287	11
	11-289	34
	11-371	6
	11-373	4
	11-375	4
1502919	11-161	6
	11-165	5
	11-181	36
	11-187	31
	11-198	14
	11-210	27
	11-221	11
	11-233	11
	11-243	64
	11-249	28
	11-259	11
	11-273	31
	11-295	25
	11-299	2
	11-347	3
1504075	3-3	5
	4-3	5
	5-3	6
1506738	1-57	24
	1-65	16
	22-39	4
1508211	11-180	27
	11-186	23
	11-194	42
	11-206	49
	11-217	41
	11-230	46
	11-242	47
	11-248	23
	11-256	48
	11-271	9
	11-289	30
	11-293	5
1508232	11-169	16
	11-170	20
	11-174	14
	11-174	16
	11-180	27
	11-186	23
	11-194	42
	11-206	49
	11-217	41
	11-230	46
	11-242	47
	11-248	23
	11-256	48
	11-271	9
	11-289	30
	11-293	5
1509888	11-120	2
	11-156	6
	11-182	53
	11-188	43
	11-212	55
	11-224	50
	11-236	60
	11-245	94
	11-250	45
	11-262	58
	11-267	35
	11-274	38
	11-289	40
	11-289	40
	11-296	44
	11-301	36
	11-301	36
	11-326	6
	11-326	7
	11-329	14
	11-385	39
	14-8	49
	22-30	10
	22-43	14
	22-45	14
1509889	11-55	22
	11-73	18
	11-76	18
	11-200	53
	11-224	52
	11-236	59

See Service Manual for service procedures.
©2026 HYSTER COMPANY

NUMERICAL INDEX (continued)

PART NO.	PAGE	ITEM
	11-262	57
	11-274	37
	11-296	48
	11-301	35
1509890	4-33	12
	11-53	26
	11-146	22
	11-146	27
	11-162	21
	11-166	20
	11-182	49
	11-188	46
	11-194	43
	11-200	51
	11-206	43
	11-212	52
	11-217	42
	11-230	47
	11-250	46
	11-256	49
	11-268	36
	11-290	43
	11-296	40
	11-304	18
	11-308	16
	11-312	18
	11-315	17
	11-331	12
	11-356	15
	11-385	44
	11-389	36
1510113	1-53	13
	2-3	10
	2-9	14
	2-13	7
	2-17	9
	2-19	7
	7-3	11
	7-5	11
	7-11	17
	7-13	12
	7-15	12
	7-17	5
	7-19	5
	7-21	6
	7-23	6
	10-3	7
	10-5	17
	10-5	26
	11-10	45
	11-18	37
	11-145	4
	11-353	35
	15-5	8
	15-9	5
	16-11	14
	16-15	16
	16-19	19
	16-22	17
	16-25	18
	16-29	20
	16-69	5
	16-71	5
	16-87	5
	16-89	13
	16-93	6
	16-97	14
	16-99	14
	16-105	19
	16-107	20
	16-114	29
	16-119	27
1510114	16-11	33
	16-15	31
	16-19	34
	16-22	33
1510115	16-11	27
	16-15	28
	16-19	32
	16-22	29
	16-25	41
1510116	11-146	30
1510117	7-3	13
	7-5	10
	7-11	13
	7-13	13
	7-15	6
	7-17	4
	7-19	4
	8-9	1
	9-5	13
	15-25	2
	15-29	14
	15-31	12
	22-49	7
1510118	1-3	1
	1-4	1
1510126	1-55	3
	1-93	8
	1-95	7
	1-99	8
	11-70	7
	11-93	8
	11-95	7
	11-99	8
	11-125	3
	14-11	15
	14-15	16
	15-5	3
	15-9	16
	16-25	25
	16-32	8
	16-33	8
	22-49	3
1514269	16-127	14
1514429	1-113	2
	1-117	2
	2-3	4
	2-9	4
	2-13	4
	2-17	3
	2-19	4
	6-9	10
	11-81	17
	11-115	10
	11-345	12
	13-8	5
	15-5	1
	15-9	18
	22-61	1
1514598	11-155	1
	11-155	4
	11-158	2
	11-158	3
	11-192	26
	11-197	4
	11-209	5
	11-281	7
	11-293	10
	11-384	20
	11-387	15
1514603	11-155	2
	11-158	1
	11-161	12
	11-165	12
	11-180	17
	11-181	35
	11-186	15
	11-187	30

NUMERICAL INDEX (continued)

PART NO.	PAGE	ITEM
	11-192	25
	11-197	3
	11-199	30
	11-205	33
	11-209	6
	11-210	20
	11-216	26
	11-222	27
	11-223	31
	11-229	31
	11-235	33
	11-239	6
	11-243	63
	11-248	15
	11-249	32
	11-255	31
	11-260	25
	11-261	31
	11-267	26
	11-271	11
	11-273	24
	11-281	6
	11-288	17
	11-293	9
	11-294	14
	11-299	12
	11-300	15
1515654	12-6	2
	12-7	2
	16-19	10
	16-22	11
	16-25	8
	16-29	29
1515831	8-5	18
1516197	16-75	6
	16-77	4
1516198	15-21	3
	16-81	12
	16-85	12
1516199	15-29	13
	15-31	16
	16-121	14
	16-123	14
1516201	16-79	13
	16-121	1
	16-123	1
1516202	16-5	6
1516204	15-23	3
1516205	16-25	19
	16-29	21
1516207	16-11	2
	16-15	2
	16-19	2
	16-22	2
1517361	6-9	17
	6-11	20
	16-101	18
	16-103	18
	16-105	18
	16-107	19
	16-109	19
	16-111	23
	16-114	24
	16-116	31
	16-119	35
1517836	14-4	41
	14-8	55
1518112	11-355	7
1520290	16-127	13
1520490	11-13	16
	11-43	7
	11-47	7
1520513	11-85	12
	11-87	10
1520639	11-343	1
1520864	11-9	26
	11-13	14
	11-17	23
	11-29	12
	11-31	6
	11-33	12
	11-37	12
	11-39	12
	11-43	13
	11-47	13
	11-56	10
	11-383	11
	11-383	12
	11-384	30
	11-384	33
	11-385	36
1521183	11-145	15
	11-343	5
	11-355	4
1521185	11-383	7
	11-387	6
1521188	11-145	15
	11-343	5
	11-355	4
	11-383	7
	11-387	6
1521309	11-161	1
	11-161	2
	11-165	1
	11-165	2
1521989	11-169	17
	11-174	15
	11-383	7
	11-387	6
1522424	15-21	5
	15-23	2
	15-25	20
	15-33	12
	15-35	16
1522426	15-21	10
	15-23	6
	15-25	41
1523732	21-4	3
1523733	21-5	5
1523734	21-4	2
1523737	21-5	5
1524397	11-162	20
	11-165	9
1525354	14-4	39
	14-8	45
1525442	9-7	11
	9-21	14
1525478	9-7	24
	9-21	16
1525567	11-223	34
	11-235	36
	11-242	52
	11-261	34
	11-272	13
	11-300	17

See Service Manual for service procedures.
©2026 HYSTER COMPANY

NUMERICAL INDEX (continued)

PART NO.	PAGE	ITEM
1525568	11-223	33
	11-235	35
	11-242	51
	11-261	33
	11-271	12
	11-300	16
1525577	11-188	35
	11-223	38
	11-235	41
	11-244	78
	11-250	35
	11-261	39
	11-364	17
1525580	11-203	8
	11-227	3
	11-241	37
	11-253	3
	11-265	5
	11-283	30
	11-289	34
1525584	11-180	26
	11-186	22
	11-194	40
	11-206	48
	11-217	40
	11-230	45
	11-241	44
	11-248	22
	11-256	47
	11-271	10
	11-289	29
	11-293	1
	11-319	3
	11-319	4
	11-385	35
	11-388	23
1525589	11-161	5
	11-165	4
	11-228	24
	11-240	16
	11-254	24
	11-266	19
	11-282	15
	11-287	9
	11-351	5
	11-363	9
1525595	11-181	43
	11-187	34
	11-193	37
	11-198	21
	11-206	50
	11-211	36
	11-217	36
	11-222	16
	11-229	41
	11-234	16
	11-241	42
	11-244	74
	11-249	30
	11-255	43
	11-260	16
	11-271	4
	11-273	30
	11-284	38
	11-288	22
	11-295	23
	11-299	4
1525596	11-181	43
	11-187	34
	11-193	37
	11-198	21
	11-206	50
	11-211	36
	11-217	36
	11-222	16
	11-229	41
	11-234	16
	11-241	42
	11-244	74
	11-249	30
	11-255	43
	11-260	16
	11-271	4
	11-273	30
	11-284	38
	11-288	22
	11-295	23
	11-299	4
1527520	16-73	2
1527719	16-73	
1527876	1-96	7
	2-3	23
	5-5	5
	11-7	10
	11-9	10
	11-13	10
	11-17	10
	11-23	7
	11-33	44
	11-40	48
	11-51	5
	11-53	7
	11-53	16
	11-55	9
	11-55	19
	11-69	8
	11-83	12
	11-85	5
	11-87	12
	11-89	4
	11-91	26
	11-93	5
	11-95	4
	11-115	8
	15-25	32
	15-33	3
	15-35	4
	16-29	4
	16-32	11
	16-33	11

NUMERICAL INDEX (continued)

PART NO.	PAGE	ITEM
1527877	1-9	13
	1-13	14
	1-17	9
	1-113	18
	1-117	18
	2-9	20
	2-13	11
	10-3	22
	10-5	13
	11-9	40
	11-18	35
	11-21	9
	11-23	22
	11-29	30
	11-31	13
	11-33	33
	11-39	37
	11-43	35
	11-47	35
	11-89	17
	11-91	24
	11-345	10
	11-347	11
	11-352	28
	11-352	28
	12-13	21
	12-17	26
1527878	1-113	1
	1-117	1
	11-81	7
	11-81	7
	11-103	1
	13-9	7
	22-5	7
	22-7	9
1527879	1-53	9
	1-57	17
	1-61	17
	1-65	24
	1-67	24
	1-69	25
	1-76	8
	1-77	12
	7-3	1
	7-5	1
	7-15	16
	7-17	13
	7-21	9
	8-5	23
	8-7	2
	10-3	15
	10-5	28
	11-7	15
	11-9	34
	11-13	32
	11-17	28
	11-23	19
	11-27	4
	11-29	18
	11-31	29
	11-33	21
	11-37	18
	11-39	21
	11-43	19
	11-47	19
	11-53	12
	11-55	6
	11-61	7
	11-62	4
	11-65	4
	11-73	16
	11-76	16
	11-83	11
	11-85	4
	11-87	4
	11-89	8
	11-91	22
	11-93	1
	11-95	1
	11-97	10
	11-99	15
	11-102	2
	15-5	3
	15-9	16
	15-19	7
	16-5	2
	16-81	21
	16-85	19
	16-89	11
	16-93	11
	16-97	6
	16-99	6
	22-25	5
1527880	1-13	24
	1-17	19
	1-23	24
	1-53	10
	1-53	20
	1-57	13
	1-61	13
	1-65	27
	1-67	27
	1-69	21
	1-78	6
	1-81	11
	1-82	8
	1-87	6
	1-89	6
	2-3	7
	2-9	19
	2-13	9
	2-17	11
	2-19	9
	7-21	16
	7-23	17
	8-3	24
	8-5	6
	10-13	3
	11-7	11
	11-9	11
	11-10	45
	11-13	11
	11-17	11
	11-18	37
	11-23	15
	11-27	3
	11-29	19
	11-31	26
	11-33	22
	11-37	19
	11-39	22
	11-43	20
	11-47	20
	11-73	14
	11-76	14
	11-81	6
	11-91	23
	11-97	9
	12-17	5
	14-8	50
	15-5	3
	15-9	16
	15-25	25
	15-29	15
	15-31	20
	15-38	4
	16-5	2
	16-7	13
	16-7	13
	16-9	13
	16-9	13
	16-11	14
	16-15	16
	16-19	19
	16-25	28
	16-29	1
	16-89	11
	16-89	17
	16-91	6
	16-93	11
	16-97	8
	16-99	8
	16-121	20
	16-123	20
	22-22	10
	22-24	4
	22-49	16
	22-53	4
	22-55	13
	22-57	15
1527881	1-76	9
	1-77	9
	1-81	10
	11-31	11
1527882	11-59	3
	11-61	3
	11-89	12
	11-107	3
1527883	1-57	12
	1-61	12
	1-65	28
	1-67	28
	1-69	31
	16-7	2
	16-9	2
	16-87	7
	16-89	8
	16-91	10
	16-93	10
	16-97	10
	16-99	10
	16-121	23
	16-123	23
	16-127	10
1527885	7-3	16
	7-5	16

©2026 HYSTER COMPANY

NUMERICAL INDEX (continued)

PART NO.	PAGE	ITEM
	7-11	19
	7-13	18
	7-15	5
	7-17	3
	7-19	3
	8-3	19
1527889	7-19	17
1528132	11-162	23
	11-166	23
	11-170	32
	11-174	29
	11-333	6
1528315	11-145	17
	11-162	27
	11-166	27
	11-170	33
	11-174	30
	11-343	9
	11-355	12
	11-383	8
1528481	1-3	3
	1-4	3
1528482	8-9	5
	16-11	21
	16-15	23
	16-19	22
	16-22	24
	16-25	36
	22-62	9
1528578	16-121	8
	16-123	8
1528579	16-121	9
	16-123	9
	18-53	18
	18-56	18
	18-61	18
	18-64	18
1528587	15-29	19
	15-31	15
1528603	19-9	28
	19-13	28
1528778	11-7	23
	11-9	35
	11-13	26
	11-17	29
	11-27	10
	11-29	20
	11-31	19
	11-33	23
	11-37	20
	11-39	23
	11-43	21
	11-47	21
	11-89	31
	11-91	25
	12-17	4
	15-25	27
	16-91	8
	16-93	8
1528888	1-3	2
	1-4	2
	11-143	4
1528889	11-143	6
1528903	9-7	7
	9-11	8
	9-15	7
	9-21	7
1529015	17-4	10
	17-8	10
	17-16	10
	17-20	10
	17-43	10
	17-49	10
	18-4	26
	18-24	26
	20-4	22
	20-22	22
	20-61	20
	20-75	20
1529016	12-13	20
1529017	17-4	9
	17-8	9
	17-16	9
	17-20	9
	17-43	9
	17-49	9
	18-3	2
	18-23	2
1529046	11-223	33
	11-223	34
	11-235	35
	11-235	36
	11-242	51
	11-242	52
	11-261	33
	11-261	34
	11-272	12
	11-272	13
	11-300	16
	11-300	17
1529052	11-145	21
	11-161	10
	11-165	11
	11-169	1
	11-169	11
	11-173	1
	11-173	10
	11-180	19
	11-186	17
	11-191	12
	11-193	28
	11-203	16
	11-205	35
	11-209	2
	11-215	13
	11-216	29
	11-227	15
	11-228	23
	11-229	34
	11-235	31
	11-239	8
	11-240	15
	11-240	25
	11-248	18
	11-253	15
	11-254	23
	11-255	36
	11-260	29
	11-265	11
	11-266	18
	11-267	30
	11-281	4
	11-282	14
	11-282	22
	11-287	4
	11-287	10
	11-288	19
	11-289	28

NUMERICAL INDEX (continued)

PART NO.	PAGE	ITEM
	11-293	2
	11-293	7
	11-321	2
	11-351	6
	11-364	10
	11-369	6
	11-373	3
	11-375	3
	11-383	16
	11-387	11
1529366	9-5	7
	11-7	17
	11-9	33
	11-13	24
	11-17	27
	11-23	21
	11-27	9
	11-29	17
	11-31	18
	11-33	20
	11-37	17
	11-39	20
	11-43	18
	11-47	18
	11-83	2
1529550	11-9	24
	11-13	12
	11-17	21
	11-56	2
1529990	1-13	26
	1-17	21
	1-23	26
	6-2	2
	6-3	2
	6-9	22
	6-11	18
	11-99	7
	15-9	3
	22-3	5
	22-7	4
1530011	16-101	19
	16-103	21
	16-105	21
	16-107	22
	16-109	17
	16-111	21
	16-114	21
	16-116	29
	16-119	33
1530243	1-10	40
	1-14	50
	1-18	45
	1-21	23
	1-23	32
	1-33	24
	1-35	24
	1-37	6
	1-42	3
	1-45	19
	1-47	16
	1-53	12
	2-3	9
	2-9	17
	2-13	8
	2-17	10
	2-19	8
	10-3	6
	10-5	16
	11-69	3
	11-149	12
	11-151	7
	22-3	3
	22-53	6
	22-59	6
1530311	6-9	12
	15-17	12
	15-19	17
1530721	13-4	25
	13-20	4
1530960	1-101	11
	11-142	1
	11-255	33
	11-267	28
	11-364	11
1530961	11-142	1
	11-255	33
	11-267	28
	11-364	11
1531001	1-84	10
	10-3	27
	10-5	24
	11-70	10
	11-115	5
	11-117	9
	11-121	6
	22-5	8
	22-7	11
	22-59	11
1531162	11-331	9
1531312	11-347	5
	11-351	2
	11-351	5
	11-351	10
	11-351	10
1531404	8-5	24
1531479	11-69	8
	11-83	15
1531480	1-113	8
	1-117	8
	11-347	18
1531557	1-9	16
	1-10	40
	1-13	17
	1-14	50
	1-17	12
	1-18	45
	1-21	15
	1-21	23
	1-23	14
	1-23	32
	1-30	12
	1-42	3
	11-69	3
	11-149	12
	11-151	7
	22-3	3
	22-7	5
	22-24	6
	22-49	20
	22-59	6
1531558	1-9	11
	1-13	12
	1-17	7
	1-53	15
	1-57	19
	1-61	19
	1-65	13
	1-67	13
	1-69	19
	1-115	7
	2-9	21
	2-13	12
	2-20	5
	11-115	5
	22-30	8
	22-32	6
	22-35	2
	22-39	6
	22-49	25
	22-65	7
1531746	11-198	20
	11-211	30
	11-222	26
	11-234	26
	11-243	67
	11-260	24
	11-273	26
	11-294	17
	11-299	11
1531973	11-182	44

See Service Manual for service procedures.
©2026 HYSTER COMPANY

NUMERICAL INDEX (continued)

PART NO.	PAGE	ITEM
	11-199	37
	11-211	38
	11-295	30
	11-303	11
	11-316	2
	11-331	11
	11-351	3
	11-363	2
	11-363	7
	11-365	1
	11-365	2
	11-366	1
	11-366	4
	11-368	1
	11-368	4
	11-371	1
	11-371	4
1531974	11-182	44
	11-199	37
	11-211	38
	11-295	30
	11-303	11
	11-316	2
	11-331	11
	11-351	3
	11-363	2
	11-363	7
	11-365	1
	11-365	2
	11-366	1
	11-366	4
	11-368	1
	11-368	4
	11-371	1
	11-371	4
1532337	13-3	20
1532363	7-21	1
	7-23	1
1532571	11-331	7
	11-345	7
	11-347	7
	11-352	25
1532648	16-85	10
1533493	16-127	2
1533494	16-127	4
1533810	11-187	34
	11-193	37
	11-198	21
	11-217	36
	11-222	16
	11-229	41
	11-234	16
	11-249	30
	11-255	43
	11-260	16
	11-284	38
	11-295	23
1534282	11-170	29
	11-174	25
	11-194	45
	11-206	52
1534329	11-332	13
1534417	6-5	34
	22-27	3
	22-28	4
1534660	1-121	2
1534672	9-7	8
	9-11	7
	9-15	8
	9-21	8
1534828	11-356	16
1536304	11-29	9
	11-31	7
	11-33	10
	11-37	9
1536724	15-5	10
	15-15	
1537133	13-3	25
1537135	11-158	4
	11-162	19
	11-165	8
	11-326	5
	11-329	13
1537449	12-9	12
1537450	12-9	10
1537459	12-9	3
1537551	11-23	3
	11-29	37
	11-31	37
	11-33	41
	11-37	35
	11-39	45
	11-43	41
	11-47	42
	11-89	32
1538217	1-91	1
1539085	11-53	11
	11-55	15
1539086	11-53	10
	11-55	16
1539872	11-383	5
	11-387	4
1540805	1-33	17
	1-35	17
	1-37	11
	11-7	4
	11-9	4
	11-13	4
	11-17	4
1540944	11-182	56
	11-188	45
	11-200	52
	11-212	54
	11-224	53
	11-236	58
	11-250	43
	11-262	56
	11-296	42
1541231	5-5	4
	12-6	3
	12-7	6
1541232	12-7	5
1541989	11-380	2
1541991	11-240	18
	11-266	17
1541992	11-145	12
	11-240	18
	11-266	17

NUMERICAL INDEX (continued)

PART NO.	PAGE	ITEM
	11-355	5
	11-380	1
1542436	1-77	16
	1-82	16
	8-3	20
	9-5	24
	11-91	9
	15-9	22
	16-26	44
	16-29	36
	16-75	15
	16-77	21
	16-79	12
	16-87	18
	16-89	25
	16-91	12
	16-93	12
	16-97	19
	16-99	19
1542439	1-57	37
	1-61	37
	1-65	36
	1-67	36
	1-69	42
	11-89	20
	16-5	9
1542442	1-69	38
	10-3	8
	12-13	22
	15-9	20
	15-23	19
	16-26	45
	16-29	35
	16-75	13
	16-77	19
	16-79	10
1543059	14-24	1
1543060	13-22	1
1543061	13-23	1
1543094	12-9	12
1543096	12-9	12
1543097	12-9	12
1543098	12-9	12
1543102	12-9	
1543691	11-83	4
	15-26	45
	16-75	12
	16-77	18
	16-79	11
	16-99	18
1543698	11-390	5
	15-9	21
1543842	1-57	34
	1-65	38
	1-69	37
	22-49	29
1544153	1-99	3
	15-5	7
	15-9	4
1544232	14-24	1
1544255	11-162	24
	11-166	24
	11-170	31
1546673	11-181	31
	11-187	27
	11-197	12
	11-210	15
	11-221	9
	11-233	9
	11-243	59
	11-249	27
	11-259	9
	11-272	20
	11-272	21
	11-384	23
1547368	11-385	37
	11-388	31
1547447	12-4	17
	12-13	7
	12-15	7
1547756	11-21	2
1548519	11-197	8
	11-197	10
	11-221	5
	11-221	7
	11-233	5
	11-233	7
	11-259	5
	11-259	7
1549398	1-103	4
	11-101	12
	22-53	5
1550159	19-9	23
1550572	12-3	14
1550626	11-384	33
	11-388	29
1553897	10-13	8
1554359	11-155	2
	11-158	1
	11-161	12
	11-162	17
	11-165	12
	11-166	19
	11-180	17
	11-181	35
	11-186	15
	11-187	30
	11-192	25
	11-197	3
	11-199	30
	11-205	33
	11-209	6
	11-210	20
	11-216	26
	11-222	27
	11-223	31
	11-229	31
	11-234	27
	11-235	33
	11-239	6
	11-242	50
	11-243	63
	11-248	15
	11-249	32
	11-255	31
	11-260	25
	11-261	31
	11-267	26
	11-271	11
	11-273	24
	11-281	6
	11-288	17
	11-293	9
	11-294	14
	11-299	12
	11-300	15

©2026 HYSTER COMPANY

NUMERICAL INDEX (continued)

PART NO.	PAGE	ITEM
1558156	11-197	13
	11-210	16
	11-221	10
	11-233	10
	11-243	60
	11-259	10
	11-272	21
1558515	12-4	20
1560538	1-71	8
1561559	11-192	15
	11-204	17
	11-206	44
	11-282	21
	11-284	37
	11-316	3
	11-343	4
	11-363	4
	11-390	3
	16-109	10
	16-111	13
	16-114	13
	16-116	13
	16-119	13
1561749	22-35	6
	22-36	2
1561755	11-192	15
	11-204	17
	11-206	44
	11-282	21
	11-284	37
	11-316	3
	11-343	4
	11-363	4
	11-390	3
	16-109	10
	16-111	13
	16-114	13
	16-116	13
	16-119	13
1561871	1-27	7
	11-83	6
	11-89	26
	11-99	9
	22-45	17
1562088	6-9	21
	6-11	24
1562353	1-119	1
1562492	14-19	2
	14-21	2
1562648	16-97	5
	16-99	5
1562649	11-165	5
	11-166	16
	11-187	31
	11-198	14
	11-221	11
	11-233	11
	11-249	28
	11-259	11
	11-295	25
	11-331	9
1563369	1-87	10
1564515	7-11	3
	7-13	3
	7-23	11
	16-11	32
	16-15	12
1565098	11-385	37
	11-388	31
1565125	1-103	2
1565195	1-9	5
	1-13	9
	1-17	4
	1-21	4
	1-23	4
1565290	15-13	2
1565303	15-13	6
1565305	15-13	27
1565309	15-14	
1565310	15-14	
1565311	15-14	
1565312	15-14	
1565313	15-13	12
1565314	15-13	12
1565315	15-14	
1565316	15-13	
1565407	6-5	22
	15-19	13
1565453	3-3	8
	4-3	8
	5-3	9
1566131	15-15	
1566141	15-15	3
1566142	15-15	2
1566143	15-15	8
1566144	15-15	7
1566145	11-161	7
	11-162	18
	11-165	6
	11-165	7
1566420	1-27	13
	1-55	5
	1-61	24
	1-84	1
	1-93	6
	1-93	13
	1-95	8
	1-95	22
	1-96	8
	1-99	7
	2-3	22
	11-7	9
	11-9	9
	11-13	9
	11-17	9
	11-21	7
	11-23	5
	11-29	29
	11-31	15
	11-33	32
	11-39	36
	11-43	34
	11-47	34
	11-51	7
	11-53	5
	11-53	15
	11-55	7
	11-55	21
	11-81	4
	11-81	4
	11-83	14
	11-85	7
	11-87	5
	11-89	2
	11-91	18
	11-93	6
	11-95	5
	11-99	6
	11-103	3
	11-347	13
	11-352	17
	11-352	17
	14-11	2
	14-15	3
	16-32	10
	16-33	10
	16-81	25
	16-85	23
	22-30	7
	22-34	7
	22-36	8
1566853	12-17	7
1568271	14-3	34

NUMERICAL INDEX (continued)

PART NO.	PAGE	ITEM
	14-8	40
1568839	9-7	15
	9-11	16
	9-15	16
	9-21	32
1568853	9-7	2
	9-11	2
	9-15	2
	9-21	4
1569465	1-77	15
	1-82	15
	15-21	20
	15-23	18
1569616	15-9	6
1573549	1-57	36
	1-61	34
	1-65	35
	1-67	35
	6-9	19
	6-11	26
	9-5	25
	10-9	8
	11-89	25
	11-345	15
	11-347	23
	11-353	31
	22-43	16
	22-45	16
1578714	16-77	14
1578878	16-49	5
	16-53	14
	16-60	1
	16-67	1
	16-77	14
1579677	9-3	28
	10-9	12
1580426	14-24	4
1580427	14-24	5
1581079	1-99	20
1581107	12-9	5
1581400	9-8	49
	9-11	37
	9-15	41
	9-21	43
	22-45	19
1581556	1-42	4
	7-19	16
	7-21	17
	7-23	18
	9-8	44
	9-11	32
	9-15	36
	9-18	22
	9-22	47
	22-43	9
	22-45	9
1581557	6-11	5
	9-7	10
	9-21	13
	18-8	4
	18-28	4
1581559	22-50	6
1581565	22-22	2
1581566	22-22	2
1581579	9-7	5
	9-11	5
	9-15	5
	9-18	15
	9-21	3
	22-43	3
	22-45	3
1581580	9-8	47
	9-11	35
	9-15	39
	9-18	24
	9-21	44
	22-43	7
	22-45	7
1581583	22-57	9
1581593	21-6	3
1581733	9-7	29
	9-15	24
	9-21	26
1581739	1-113	19
	1-117	19
	9-7	25
	9-7	43
	9-11	24
	9-11	31
	9-15	25
	9-15	35
	9-18	9
	9-18	21
	9-21	27
	9-22	48
	22-22	13
	22-43	10
	22-45	10
1581741	19-29	8
1581742	18-53	22
	18-56	22
	18-61	22
	18-64	22
1581827	18-8	11
	18-28	11
	19-3	9
	20-12	23
	20-30	23
	20-67	23
	20-81	23
1581830	21-6	3
1581842	9-3	19
1581843	18-51	2
	18-55	2
	18-59	2
	18-63	2
1581848	9-7	13
	9-21	10
	16-127	11
	22-5	2
	22-7	1
1581851	17-5	43
	17-9	43
	17-17	45
	20-4	19
	20-22	19
	22-57	8
1581852	16-127	12
1581853	22-5	3
	22-7	2
1581854	17-5	44
	17-9	44
	17-17	25
	20-4	20
	20-22	20
1581887	9-7	17
	9-21	9
1581888	9-7	16
	9-21	15
1582161	16-11	26
	16-15	30
	16-19	28
	16-22	32
	16-25	43
1582218	1-89	3
1582300	6-9	15
	15-19	15
1582301	6-9	14
1582442	17-40	16
	20-57	21
	20-93	21
1582464	1-103	17
	1-113	4
	1-117	4
	6-6	38
	8-3	9
	11-21	5
	11-51	10
	11-53	18
	11-55	13
	11-62	7
	11-83	8
	11-85	2
	11-87	2
	11-89	7
	11-91	4
	11-97	7
	11-99	2
	11-109	10
	11-110	7
	11-112	5
	11-142	5
	11-143	9
	11-146	26
	11-151	20
	11-153	6
	11-347	17
	11-352	15
	22-32	7
	22-34	8
	22-49	23
	22-53	10
	22-55	18
	22-57	19
1582484	11-384	28
1582486	11-384	29
	11-388	25
1582605	11-329	19
	11-345	16

See Service Manual for service procedures.
©2026 HYSTER COMPANY

NUMERICAL INDEX (continued)

PART NO.	PAGE	ITEM
	11-347	22
	11-353	32
	11-390	4
	12-13	23
	14-8	52
	22-55	15
	22-57	18
1583611	1-57	11
	1-61	11
	1-65	9
	1-67	9
	1-69	5
	1-76	2
	1-77	2
	1-78	2
	1-81	2
	1-82	3
	9-11	22
	15-3	3
	15-4	5
1583945	14-3	37
	14-8	47
1584693	14-24	5
1584695	13-29	2
1585575	15-17	5
	15-19	8
1586013	9-18	19
	15-3	5
	16-127	6
1586022	9-7	12
	9-21	11
1586428	11-118	3
1586429	1-61	25
	1-69	15
	11-117	5
1586432	13-32	2
	22-50	4
1586627	1-30	10
1586629	9-7	37
	9-11	38
	9-15	32
	9-18	12
	9-21	42
1586759	11-118	6
1587437	8-3	12
1589280	1-14	42
	1-17	37
1590173	11-56	8
1593334	11-118	1
1593335	6-9	13
	6-11	6
1593555	17-35	
1595170	1-129	3
1595440	8-6	28
1596404	19-3	8
	20-12	24
	20-30	24
	20-67	24
	20-81	24
1597381	14-3	37
	14-8	47
	16-127	8
1597442	11-89	22
1597644	5-27	4
1597709	5-25	9
1597710	5-25	6
1597773	11-145	19
	11-347	2
	11-351	4
	11-351	6
1598220	22-59	12
1599415	22-5	16
	22-7	20
	22-59	14
1599441	5-7	2
	5-11	13
1599442	3-5	3
	4-5	3
	5-7	3
1599443	5-7	4
1599444	5-7	5
1599445	3-7	13
	4-7	12
	4-17	13
	5-7	6
	5-23	9
1599446	3-11	27
	4-11	38
	5-7	11
1599448	3-25	10
	3-27	8
	3-29	8
	3-31	12
	3-33	11
	3-43	6
	3-45	16
	4-13	9
	4-23	9
	4-35	7
	5-7	7
	5-17	9
	5-23	10
	5-25	20
	7-7	4
1599449	5-7	10
1599454	5-7	13
1599458	3-7	8
	3-9	7
	3-25	2
	4-7	6
	4-8	4
	4-13	11
	5-9	9
	5-17	1
1599459	5-9	1
1599461	5-9	3
1599462	5-9	15
1599463	3-7	1
	3-11	29
	4-7	7
	4-11	4
	5-9	16
	5-11	6
1599464	3-7	2
	3-12	50
	5-9	17
	5-11	7
1599465	5-9	12
1599466	5-9	10
1599467	5-9	13
1599468	5-9	19
	5-23	11
1599469	5-9	18
1599470	3-7	6
	3-9	15
	3-12	54
	3-43	7
	4-7	14
	4-11	17
	4-19	12
	4-21	6
	4-27	18
	4-35	9
	5-9	5
	5-11	46
	5-23	2
1599471	3-12	56
	3-27	25
	3-31	47
	3-33	39
	3-45	6
	4-21	32
	4-31	31
	4-35	26
	5-9	8
	7-7	18
	7-25	29
1599472	3-31	24
	3-33	23
	3-35	8
	4-35	21
	5-9	7
1599473	3-7	15
	3-23	7
	4-14	3
	5-9	4
1599475	3-9	12
	3-23	17
	4-7	15
	4-21	7
	5-9	11
	5-15	3
1599476	5-9	6
1599479	5-17	6
1599480	3-9	18
	4-21	3
	5-17	7
1599481	3-9	19
	4-21	4
	5-17	8
1599485	3-9	8
	4-8	11
1599486	5-11	45
1599487	5-11	44
1599489	5-11	15
1599516	5-11	16
1599517	5-11	17
1599518	3-11	18
	4-11	34
	5-11	18
1599519	5-11	19
1599520	3-11	19
	5-11	20
1599521	3-11	12
	4-11	28
	5-11	21
1599522	5-11	43
1599523	5-11	42
1599525	3-11	22

NUMERICAL INDEX (continued)

PART NO.	PAGE	ITEM
	5-11	11
1599526	5-11	12
1599528	3-11	14
	4-11	30
	5-11	14
1599529	3-11	21
	4-11	37
	5-11	22
1599530	5-11	23
1599531	5-11	24
1599532	5-11	25
1599533	5-11	26
1599534	5-11	27
1599535	5-11	28
1599536	3-11	8
	4-11	25
	5-11	29
	5-11	32
1599537	3-11	9
	4-11	26
	5-11	30
	5-11	33
1599538	5-11	31
1599539	5-11	34
1599540	5-11	35
1599541	5-11	36
1599542	3-39	28
	4-31	29
	5-11	37
1599543	5-15	2
1599544	3-12	48
	4-11	6
	5-11	8
1599545	5-11	1
1599546	5-11	2
1599547	5-11	3
1599548	3-12	44
	5-11	4
1599549	5-11	5
1599550	3-12	49
	5-11	9
1599553	5-11	38
1599555	5-11	47
1599556	5-15	1
1599557	5-11	39
1599559	5-15	4
1599560	5-15	5
1599561	5-15	6
1599562	3-19	42
	3-33	27
	5-15	7
1599563	5-15	8
1599565	5-15	10
1599567	5-15	11
1599568	3-23	10
	4-14	15
	5-15	12
	5-19	7
	7-25	13
1599569	3-23	1
	4-14	5
	5-19	1
1599570	5-19	2
1599571	5-19	3
1599572	3-23	4
	4-14	8
	5-19	4
1599573	5-19	5
1599574	3-23	6
	3-25	4
	4-13	13
	4-14	10
	5-19	6
	5-21	4
1599576	5-19	9
1599579	3-27	11
	3-31	13
	3-33	12
	4-21	14
	4-23	10
	5-19	8
	5-25	17
1599580	5-19	14
1599581	5-19	13
1599582	5-19	12
1599584	5-21	5
1599585	5-21	3
1599586	5-21	2
1599588	5-21	9
1599589	5-21	11
1599590	3-25	8
	4-13	16
1599591	5-21	6
1599594	5-21	16
1599595	5-21	15
1599596	5-21	17
1599597	5-21	20
1599598	5-21	18
1599604	5-23	1
	5-23	3
1599605	4-21	9
	5-23	4
1599606	5-23	3
1599610	5-23	8
1599611	5-23	12
1599795	5-25	18
1599797	5-25	16
1599798	5-25	5
1599801	3-9	13
	3-11	11
	3-19	38
	3-21	29
	3-35	16
	4-11	39
	4-23	15
	5-25	8
	5-29	8
1599802	3-27	4
	4-21	18
	5-25	21
1599803	5-25	10
1599807	5-25	15
1599812	5-25	14
1599814	5-25	13
1599815	3-19	11
	3-21	10
1599816	3-31	8
	3-33	6
	4-14	14
1599818	5-11	41
	5-27	5
1599819	5-27	7
1599820	5-27	6
1599821	5-27	17
1599822	5-27	18
	5-27	20
1599823	5-27	19
1599824	5-27	16
1599825	5-27	15
1599826	5-27	14
1599827	5-27	13
1599828	5-27	8
1599829	5-27	9
1599830	5-27	12
1599831	5-27	11
1599832	5-27	10
1599833	5-29	1
1599834	5-29	2
1599835	5-29	3
1599836	5-29	4
1599837	5-29	5
1599839	5-29	7
1599840	5-25	3
1599841	5-29	9
1599842	5-29	10
1599843	5-29	11
	11-89	27
1599844	5-25	4
1599847	5-30	3
1599850	5-30	6
1599851	5-30	7
1599853	5-30	9
1599868	5-30	23
1599870	5-33	8
1599871	5-33	7
1599873	3-39	8
	4-31	7
	5-33	12
1599874	3-39	9
	4-31	8
	5-33	13
1599875	3-39	10
	4-31	9
	5-33	14
1599876	3-39	11
	4-31	10
	5-33	11
1599877	3-39	4
	4-31	3
1599878	3-39	5
	4-31	4
	5-33	16
1599879	3-39	6
	4-31	5
	5-33	17
1599881	5-33	23
1599883	5-33	27
1599884	5-33	26
1599885	5-33	29
1599886	5-33	25
1599887	5-33	20
1599888	5-33	28
1599889	5-33	22
1599890	5-33	18
1599891	5-33	21
1599892	5-33	9
1599893	5-33	5
1599894	5-33	4
1599895	5-33	2
1599896	3-39	29
	3-41	4
	4-31	27
	5-33	1
1599897	5-33	3
1599899	3-31	9
	3-33	7
	5-25	2
1599907	5-27	26

See Service Manual for service procedures.
©2026 HYSTER COMPANY

NUMERICAL INDEX (continued)

PART NO.	PAGE	ITEM
1599908	3-27	3
	4-21	17
	5-27	27
1599909	5-27	21
1599910	5-27	23
1599911	5-27	22
1599912	5-27	25
1599913	5-27	24
1600086	3-31	27
	3-33	26
	4-17	14
	5-25	12
1600093	5-27	4
1600273	5-11	10
1600275	5-21	1
1600276	5-21	13
1600277	5-21	14
1600278	5-21	13
1600279	5-21	14
1600491	15-13	20
1600492	15-13	20
1600493	15-13	27
1602431	11-333	3
	11-337	2
1603021	11-197	8
	11-197	10
	11-209	11
	11-209	13
	11-221	5
	11-221	7
	11-233	5
	11-233	7
	11-242	55
	11-242	57
	11-259	5
	11-259	7
	11-272	16
	11-272	18
1603236	11-197	8
	11-197	10
	11-209	11
	11-209	13
	11-221	5
	11-221	7
	11-233	5
	11-233	7
	11-242	55
	11-242	57
	11-259	5
	11-259	7
	11-272	16
	11-272	18
1605990	13-32	8
1606085	15-13	
1606086	15-13	
1606087	15-13	1
1606088	15-13	1
1606544	1-82	17
	8-3	20
	9-3	26
	10-3	9
	10-9	6
	11-91	8
	11-329	17
	15-9	19
	15-21	19
	15-23	19
	16-9	18
	16-11	18
	16-15	20
	16-20	39
	16-22	39
	16-26	47
	16-75	16
	16-77	22
1606674	1-87	12
1608616	5-27	2
1608617	5-27	2
1608654	1-30	11
	1-57	38
	1-65	7
1608758	11-169	16
	11-170	20
	11-174	14
	11-174	16
1608759	11-169	15
	11-170	21
	11-173	13
	11-174	17
1608857	11-182	50
	11-194	44
	11-200	47
	11-206	51
	11-212	53
	11-217	44
	11-224	49
	11-230	49
	11-236	53
	11-245	92
	11-256	52
	11-262	51
	11-267	36
	11-274	41
	11-278	16
	11-284	41
	11-289	41
	11-296	43
	11-301	41
	11-385	40
	11-388	32
1609864	22-23	2
1611112	22-65	5
1611564	22-23	3
1613749	9-7	26
	9-15	17
	9-21	23
1613755	9-7	27
	9-15	18
	9-18	10
	9-21	24
1613763	9-7	28
	9-15	19
	9-18	11
	9-21	25
1614087	1-84	10
1614769	12-13	13
1615956	9-7	6
	9-11	6
	9-15	6
	9-21	6
1616343	11-151	15
	11-182	55
	11-188	41
	11-200	48
	11-212	51
	11-224	55
	11-236	54
	11-250	41
	11-262	52
	11-278	15

NUMERICAL INDEX (continued)

PART NO.	PAGE	ITEM
	11-296	46
	11-301	40
1616345	11-149	7
	11-151	12
	11-174	26
	11-304	16
	11-308	14
	11-312	16
	11-315	15
	11-374	7
	11-376	7
1616491	10-13	11
1616740	13-3	6
1617601	1-89	7
1618505	15-29	6
1618586	13-24	5
1618589	13-24	4
1622946	18-42	12
	19-21	4
	20-17	12
	20-35	12
	20-72	12
	20-86	12
1623050	11-345	4
	11-347	6
	11-352	21
	11-360	2
1623155	22-35	1
1623544	13-7	7
	13-11	6
	13-13	4
1623545	13-7	6
	13-11	18
	13-17	13
1623548	13-7	33
	13-18	4
1623550	13-7	32
	13-18	5
1623576	13-7	5
	13-11	7
	13-13	7
1623578	13-7	21
	13-19	12
1623590	13-11	3
1623591	13-11	4
1623672	13-11	13
1623676	13-13	8
1623677	13-13	9
1623690	13-13	25
1625338	8-3	7
1626490	1-6	2
1626727	11-156	5
	11-364	16
	11-365	3
	11-366	3
	11-367	5
	11-368	3
	11-369	5
	11-372	13
1626984	1-27	5
	22-28	5
1627465	12-3	4
1627793	13-11	2
1627794	13-11	14
1627825	13-14	27
1627826	13-14	28
	13-14	28
1627827	13-14	28
1629204	11-13	13
1632865	11-155	2
	11-158	1
	11-161	12
	11-165	12
	11-180	17
	11-181	35
	11-186	15
	11-187	30
	11-192	25
	11-197	3
	11-199	30
	11-205	33
	11-209	6
	11-210	20
	11-216	26
	11-222	27
	11-223	31
	11-229	31
	11-234	27
	11-235	33
	11-239	6
	11-242	50
	11-243	63
	11-248	15
	11-249	32
	11-255	31
	11-260	25
	11-261	31
	11-267	26
	11-271	11
	11-273	24
	11-281	6
	11-288	17
	11-293	9
	11-294	14
	11-299	12
	11-300	15
1636808	16-19	8
	16-22	9
	16-25	2
	16-29	15
1641351	13-8	2
	13-9	8
1641362	13-7	17
	13-19	2
1643935	11-7	1
	11-9	1
	11-13	1
	11-17	1
1643936	11-7	1
	11-9	1
	11-13	1
	11-13	1
	11-17	1
1644398	1-27	6
	1-89	10
	8-3	11
1644938	15-9	15
1645381	15-9	13
1646397	15-9	13
1646457	11-212	56
	11-236	56
	11-262	54
	11-274	40
	11-296	47
	11-301	39
1650229	12-13	12
1650640	1-113	16
	1-117	16
1652290	11-117	10
1654013	11-117	10
1655172	11-355	5

See Service Manual for service procedures.
©2026 HYSTER COMPANY

NUMERICAL INDEX (continued)

PART NO.	PAGE	ITEM
	11-380	1
1655194	11-333	4
	11-333	5
1655865	1-115	2
1657779	13-14	26
1659020	15-9	15
1662012	16-36	9
	16-39	9
	16-42	9
	16-45	9
1663739	16-127	6
1663877	8-3	2
1665225	14-22	1
1665557	3-3	9
	4-3	9
	5-3	10
1665758	11-121	5
1668356	14-22	1
1669009	11-105	1
	11-105	2
	11-106	5
1672339	14-22	2
1672692	11-89	18
	11-125	2
1676212	11-158	4
	11-162	19
	11-326	5
1677115	1-87	17
1678361	6-5	16
1683346	11-53	15
	11-55	21
	22-49	15
1683486	15-17	15
	15-19	6
	22-43	4
	22-45	4
1686971	1-115	1
1687435	14-11	14
	14-15	15
1689544	9-5	12
1689551	9-11	23
1689744	5-9	
	5-12	
	5-15	
	5-27	
1691525	12-17	28
1692643	12-15	13
1693371	1-57	27
	1-65	8
	1-67	8
1694442	11-99	12
1694700	1-103	6
	1-113	13
	1-117	13
1694830	22-49	14
1695790	19-31	8
1697553	1-103	2
1698434	12-17	8
1698449	11-127	5
	11-129	9
	11-131	9
	11-133	9
	11-135	9
	11-137	9
	11-139	9
	11-141	9
1698666	11-331	1
1698795	1-95	6
1698796	1-9	38
	1-13	41
	1-17	36
	22-65	9
1698797	22-59	13
1698799	1-87	14
1698801	1-9	34
	1-13	37
	1-14	43
	1-17	32
	1-17	38
1699334	1-57	26
	1-61	26
	1-65	18
	1-67	18
	1-69	14
1700460	11-179	3
	11-179	4
	11-185	3
	11-185	4
	11-191	1
	11-191	2
	11-191	9
	11-203	2
	11-203	10
	11-203	9
	11-203	1
	11-215	10
	11-215	2
	11-215	1
	11-227	2
	11-227	1
	11-227	2
	11-227	29
	11-240	2
	11-240	29
	11-241	30
	11-241	3
	11-247	30
	11-247	3
	11-247	4
	11-253	1
	11-253	2
	11-253	7
	11-265	2
	11-265	7
	11-265	8
	11-283	31
	11-283	31
	11-289	31
	11-289	32
	11-289	31
	11-289	32
	22-43	12
	22-45	12
1700461	11-179	3
	11-179	4
	11-179	3
	11-185	4
	11-185	1
	11-191	2
	11-191	9
	11-203	10
	11-203	1
	11-215	2
	11-215	1
	11-227	2
	11-227	29
	11-240	30
	11-241	3
	11-247	4
	11-247	1
	11-253	2
	11-253	7
	11-265	8
	11-265	31
	11-283	31
	11-289	32
	22-43	12
	22-45	12
1701768	22-43	1
	22-45	1
1702412	1-9	37
	1-13	40
	1-17	35

NUMERICAL INDEX (continued)

PART NO.	PAGE	ITEM
1703513	11-127	8
	11-129	8
	11-131	7
	11-133	8
	11-135	8
	11-137	8
	11-139	8
	11-141	8
1703579	13-13	6
1703775	11-137	22
	11-141	22
1704528	11-127	10
	11-129	10
	11-131	10
	11-131	10
	11-133	10
	11-133	10
	11-135	10
	11-135	10
	11-137	10
	11-137	10
	11-137	10
	11-139	10
	11-139	10
	11-139	10
	11-141	10
	11-141	10
1704608	16-79	6
1704669	11-69	11
	11-70	2
1704901	15-19	1
1705359	11-105	4
1707681	11-73	25
1707826	5-17	5
1708303	11-304	20
	11-308	18
	11-312	15
	11-315	14
1709980	1-53	25
	1-55	4
	1-93	3
	1-95	3
1719933	5-30	14
1719937	5-30	1
1719938	5-30	2
1719939	5-31	25
1719941	5-30	5
1719942	5-30	10
1719943	5-30	8
1719944	5-30	15
1719945	5-30	18
1719946	5-30	19
1719947	5-30	16
1719948	5-30	11
1719949	5-30	22
1719950	5-30	21
1719951	5-30	12
1719952	5-30	13
1719953	5-31	26
1719964	5-30	4
1719965	5-30	17
1719968	3-7	14
	3-9	11
	3-11	28
	4-8	12
	4-17	17
1719973	5-30	20
1720462	5-21	12
2004005	1-110	2
	3-41	14
	4-33	13
	11-76	26
	11-79	2
	11-112	3
	11-112	3
	11-112	3
	11-143	7
	11-146	28
	11-151	16
	11-353	33
	11-378	3
2008121	15-17	8
	15-19	27
2013088	18-41	9
	20-17	9
	20-72	9
2013089	18-41	8
	20-17	8
	20-71	8
2021341	15-5	4
2021343	15-5	4
2021353	15-5	2
	15-9	17
2022509	6-9	23
	6-11	23
2022719	1-9	24
	1-21	19
	9-3	6
	22-29	4
	22-62	7
2027662	13-3	21
2027663	13-3	18
2027817	13-3	22
2027940	1-33	16
	1-35	16
	1-37	10
2027949	6-9	5
	6-11	15
2029223	8-3	15
2032488	17-29	8
	18-45	8
	19-25	7
	20-39	7
2034459	1-119	12
2034460	1-119	12
2035072	19-17	14
	19-18	16
2037343	15-13	7
2037517	15-13	17
2037518	15-13	17
2041520	15-15	1
2044370	16-73	9
2044371	16-73	9
2044515	14-7	32
2045134	11-384	28
	11-388	21
2045872	17-12	3
	17-12	3
	17-12	3
	17-12	3
	17-12	3
	17-46	3
	18-16	12
	18-16	12
	18-19	12
2046164	20-32	3
	20-32	3
	20-32	3
	20-83	3
	20-83	3
2046866	6-5	27
2056600	11-70	6
2058111	11-153	2
2060555	11-174	16
	11-186	23
	11-194	42
	11-217	41
	11-230	46
	11-248	23
	11-256	48
	11-293	5
2061357	22-49	5
2061646	16-36	7
	16-39	7
	16-41	7
	16-45	7
	16-56	8
	16-58	8
	16-64	7
	16-66	7

©2026 HYSTER COMPANY

NUMERICAL INDEX (continued)

PART NO.	PAGE	ITEM
2062874	11-142	1
2065130	19-17	14
	19-18	16
2065667	1-53	3
	1-84	8
	1-93	5
	1-95	5
	14-11	18
	14-15	20
2068337	11-73	24
	11-76	24
2068377	3-19	21
2068378	3-15	28
	3-17	18
	3-19	33
	3-19	44
	3-21	25
	3-31	46
	3-33	37
	3-45	17
	3-46	4
	5-9	14
	5-15	9
	7-7	14
	7-25	14
2069381	11-169	15
	11-169	16
	11-170	20
	11-170	21
	11-173	13
	11-174	14
	11-174	16
	11-174	17
2070018	16-73	11
2070073	13-22	2
2070076	13-28	2
2070077	13-29	2
2070080	13-22	2
2071517	9-7	39
	9-11	29
	9-15	30
	9-18	17
	9-21	39
2073087	20-32	3
	20-32	3
	20-32	3
	20-32	3
	20-32	3
	20-83	3
	20-83	3
2073197	1-119	10
2074209	1-121	1
2074210	1-121	1
2074859	22-49	30
2075615	1-119	14
2075656	1-119	3
2077818	18-34	12
	18-34	12
	18-38	12
	20-32	3
	20-32	3
	20-32	3
	20-83	3
2077819	20-32	3
	20-84	3
2077983	3-27	26
	4-21	33
	5-23	7
2078335	10-13	14
2080376	10-13	10
2080648	13-3	15
2081841	13-3	14
2081863	16-101	13
	16-103	22
	16-105	13
	16-107	17
	16-109	24
	16-111	28
	16-114	34
	16-116	22
	16-119	29
2084313	3-9	1
	4-8	7
2084314	5-17	4
2084323	5-21	8
2084330	4-23	6
2084466	3-39	7
	4-31	6
2084467	3-39	18
	4-31	16
2084469	3-39	13
	4-31	12
2085801	8-3	16
2088124	17-24	3
	17-24	3
	17-24	3
	17-24	3
	17-52	3
2091513	15-21	15
2091876	11-255	34
	11-267	27
2092548	5-7	14
2092550	5-21	19
2092552	5-7	8
2098083	11-115	11
	11-121	3
2098280	11-384	29
	11-388	25
2100204	11-304	14
	11-307	12
2100710	11-62	7
	14-16	24
2100927	5-9	2
2102640	1-123	1
2102678	1-121	3
	16-103	13
	16-107	9
2102881	19-9	22
2105803	9-5	12
2107187	10-13	1
2107320	22-28	1
2107952	11-303	5
	11-303	6
	11-307	5
	11-307	6
	11-307	7
	11-311	8
	11-315	7
	11-315	8
2108249	11-127	9
	11-131	5
	11-135	5
	11-137	5
2109965	1-48	3
	1-50	9
2109975	22-59	1
	22-60	2
2110942	11-127	15
	11-129	15
	11-131	15
	11-133	15
	11-135	15
	11-137	15
	11-139	15
	11-141	15
2111049	14-11	6
	14-15	7
2111770	11-127	14
	11-129	14
	11-131	14
	11-133	14
	11-135	14
	11-137	14
	11-139	14
	11-141	14
2302899	16-73	11

NUMERICAL INDEX (continued)

PART NO.	PAGE	ITEM
2304805	17-39	5
	20-55	14
	20-57	14
	20-93	14
2305581	16-105	22
	16-107	23
	16-114	31
	16-119	39
2305586	6-11	11
2306118	9-3	10
	16-11	12
	16-15	14
	16-19	17
	16-22	20
	16-25	32
2306942	17-5	34
	17-9	34
	17-17	34
	17-21	34
	17-44	34
	17-50	34
	20-8	30
	20-26	30
	20-64	30
	20-78	30
2308541	6-9	6
	6-11	16
2309831	11-380	3
2314751	11-388	24
2796247	17-35	15
3020388	21-4	1
3032869	11-324	2
3170550	11-303	7
	11-303	8
	11-311	10
	11-311	11
4004775	1-113	17
	1-117	17
4005010	1-113	22
	1-115	
4010153	17-35	6
4010154	17-35	7
4010155	17-35	8
4010156	17-35	4
4010797	11-145	19
4013267	17-37	12
	20-8	19
	20-26	19
	20-45	10
	20-49	10
	20-63	19
	20-77	19
	20-89	10
4014224	12-13	18
	12-15	12
4016000	16-81	1
	16-85	1
4016730	22-62	4
4017632	1-99	13
4018174	11-383	4
	11-387	3
4018396	8-5	2
4018397	8-5	13
4019192	11-23	4
	11-29	36
	11-31	31
	11-33	40
	11-37	34
	11-39	44
	11-43	40
	11-47	41
	11-51	12
	11-99	14
	11-329	7
	11-352	19
4020588	12-4	18
4020999	1-87	10
4021384	5-27	3
4021996	11-23	14
	11-29	33
	11-31	39
	11-33	37
	11-37	31
	11-39	41
	11-43	38
	11-47	38
	22-30	3
4023934	11-181	39
	11-187	31
	11-198	17
	11-210	26
	11-221	14
	11-233	14
	11-245	91
	11-249	28
	11-259	14
	11-274	34
	11-295	25
	11-301	34
4025477	12-9	4
4026040	10-7	3
	10-11	3
4026085	9-3	20
	10-7	5
	10-11	4
4027973	11-374	10
	11-376	10
4027974	11-374	13
	11-376	13
4028318	22-25	4
	22-26	3
4029443	17-5	21
	17-9	21
	17-17	21
	17-21	21
	17-44	21
	17-50	21
	18-8	12
	18-28	12
	19-3	5
	19-10	43
	19-14	43
	20-3	6
	20-12	15
	20-21	6
	20-30	15
	20-61	6
	20-67	15
	20-75	6
	20-81	15
4029506	9-7	23
	9-15	14
	9-18	2
	9-21	17
4029538	9-7	22
	9-11	13
	9-15	13
	9-18	3
	9-21	18
4029920	9-7	21
	9-11	12
	9-15	12
	9-18	4
	9-21	20
4030279	1-101	19
	1-105	17
4030503	11-345	3
	11-352	22
4031066	21-3	
4031146	9-7	18
	9-11	9
	9-15	9
	9-18	7
	9-21	22
4031653	22-23	3
4031956	14-7	34
4032291	9-7	19
	9-11	10
	9-15	10
	9-18	5
	9-21	21
4032292	9-7	20
	9-11	11
	9-15	11
	9-18	6
	9-21	19
4032347	1-40	3
4032607	9-11	14
4033412	17-17	15
	17-21	15
	18-3	10
	18-23	10
4033414	17-5	16
	17-9	16
	17-17	16

See Service Manual for service procedures.
©2026 HYSTER COMPANY

NUMERICAL INDEX (continued)

PART NO.	PAGE	ITEM
	17-21	16
	17-44	16
	17-50	16
	18-4	15
	18-24	15
	19-9	20
	19-13	20
	20-3	12
	20-21	12
	20-61	12
	20-75	12
4033434	21-5	
4033435	21-5	
4034634	22-85	
4034685	11-385	41
	11-388	33
4035905	11-145	14
	11-170	22
	11-174	20
	11-180	22
	11-186	20
	11-188	37
	11-191	8
	11-197	6
	11-203	1
	11-212	50
	11-215	8
	11-221	3
	11-227	10
	11-233	3
	11-241	32
	11-248	20
	11-250	37
	11-253	10
	11-259	3
	11-283	25
	11-283	33
	11-296	32
	11-355	9
	11-384	25
4036523	11-91	32
	11-97	17
	11-142	3
	11-145	20
	11-161	3
	11-165	3
	11-166	15
	11-169	6
	11-173	5
	11-181	40
	11-187	32
	11-191	11
	11-197	2
	11-203	13
	11-209	3
	11-215	12
	11-222	22
	11-227	14
	11-234	22
	11-240	27
	11-249	31
	11-253	14
	11-260	22
	11-282	23
	11-293	8
	11-294	20
	11-295	27
	11-296	34
	11-355	8
4036873	11-142	4
	11-161	9
	11-165	11
	11-169	12
	11-173	10
	11-191	13
	11-203	15
	11-209	1
	11-215	14
	11-228	16
	11-235	32
	11-254	16
	11-261	30
	11-282	22
	11-293	7
	11-369	6
	11-383	15
4038266	8-11	5
	8-13	5
4038677	14-19	13
	14-21	11
4039104	22-55	10
4039364	11-51	2
	11-345	2
4041194	19-32	14
4041255	16-73	13
4043012	1-109	7
4043014	1-109	10
4043015	1-107	24
	1-109	20
4043016	1-107	16
	1-109	13
4043017	1-109	6
4043020	1-107	10
	1-109	4
4043026	1-107	15
4043316	11-383	1
4043628	1-99	21
	22-59	3
	22-60	3
4043632	9-7	32
	9-11	19
	9-15	22
	9-21	30
4043633	1-57	25
	1-65	17
	1-67	17
4043635	11-118	2
4043636	3-3	10
	4-3	10
	5-3	11
	16-127	10
4043638	11-152	1
4044070	11-203	7
	11-204	25
	11-227	4
	11-239	13
	11-253	4
	11-282	13

NUMERICAL INDEX (continued)

PART NO.	PAGE	ITEM
	11-283	30
	11-372	14
4044957	10-3	12
	10-5	6
4044977	7-3	18
	7-5	18
	7-21	11
4044987	13-32	1
	13-32	9
4044989	13-32	1
	22-50	5
4045015	14-11	10
	14-15	11
4045017	14-11	11
	14-15	12
4045422	11-145	16
	11-343	7
	11-355	10
	11-383	7
4045423	11-83	13
	11-85	6
	11-87	11
	11-89	9
4045424	11-125	7
4046441	11-162	29
	11-166	21
	11-170	27
	11-174	24
	11-308	16
	11-308	17
4047669	11-155	1
	11-155	4
	11-158	2
	11-158	3
	11-180	16
	11-192	26
	11-197	4
	11-205	32
	11-209	5
	11-281	7
	11-293	10
	11-384	20
	11-387	15
4048778	20-46	21
	20-50	21
	20-89	21
4048782	20-8	18
	20-26	18
	20-63	18
	20-77	18
4048783	20-46	19
	20-50	19
	20-89	19
4048784	20-46	18
	20-50	18
	20-89	18
4050091	20-46	18
	20-46	19
	20-50	18
	20-50	19
	20-89	18
	20-89	19
4050426	1-113	7
	1-117	7
4051434	9-5	9
	9-7	36
	9-11	40
	9-15	28
	9-18	25
	9-21	35
4052151	11-156	3
4054932	9-7	33
	9-11	20
	9-15	23
	9-21	31
4055505	18-8	17
4055506	20-12	27
	20-67	27
4056907	11-304	14
	11-308	12
4057611	18-9	30
	18-28	30
	19-3	16
	20-12	12
	20-30	12
	20-67	12
	20-81	12
4058427	22-85	28
4063703	22-85	7
4063717	22-85	23
4065036	22-85	25
4068195	5-11	10
4068196	5-11	40
4068197	5-21	13
4068198	5-21	14
4068199	5-21	13
4068200	5-21	14
4068201	4-21	10
	5-23	5
4068202	5-25	7
4068203	5-19	15
	5-27	1
4068363	5-9	
	5-12	
	5-15	
	5-27	
4068364	3-45	1
	7-3	8
	7-5	14
	7-7	1
	7-11	12
	7-13	16
	7-25	15
4074472	11-319	1
	11-384	34
	11-388	22
4074473	11-319	1
4074942	11-53	19
4077618	22-49	17
4077646	19-10	52
	19-14	52
4077648	19-10	52
	19-14	52
4077650	19-10	52
	19-10	52
	19-14	52
	19-14	52
4077653	19-10	52
	19-14	52
4078947	1-69	39
	16-7	17
	16-9	17
	16-87	18
	16-91	12
	16-93	12
4080506	16-126	1
4082846	19-9	9
	19-13	9
4083363	1-61	36
	1-67	37
	1-69	41
4083370	21-2	1
4083371	21-2	1
4083372	21-2	1
4083374	21-2	1
4083678	21-2	1
4083679	21-2	1
4083680	21-2	1
4083686	21-2	1
4083687	21-2	1
4083688	21-2	1
4083870	21-2	1
4083873	21-2	1
4083874	21-2	1
4083875	21-2	1
4083876	21-2	1
4083878	21-2	1
4083879	21-2	1
4083880	21-2	1
4083881	21-2	1
4083882	21-2	1
4083883	21-2	1
4083888	21-3	
4084441	22-85	27
4084803	8-9	12
4084991	22-85	10
4084993	22-85	3
4085110	11-7	99
	11-10	
	11-14	
	11-18	
	11-19	1
4085161	22-85	12

See Service Manual for service procedures.
©2026 HYSTER COMPANY

NUMERICAL INDEX (continued)

PART NO.	PAGE	ITEM
4085162	22-85	13
4085163	22-85	14
4085164	22-85	16
4085165	22-85	17
4085166	22-85	18
4085167	22-85	19
4085979	16-36	9
	16-39	9
	16-42	9
	16-45	9
4090982	17-29	3
	18-45	4
	19-25	3
	20-39	3
4090984	17-31	3
	18-45	4
	19-25	3
	20-39	3
4090985	17-31	3
	18-45	4
4095058	1-9	4
4098513	15-13	3
4098977	7-15	8
	7-17	11
	7-19	11
	7-21	4
	7-23	4
4099359	22-10	2
4099902	11-324	1
4101267	11-152	8
4103784	11-169	17
	11-174	15
4103785	11-53	9
	11-55	18
4106301	18-8	19
	18-28	19
	20-8	23
	20-26	23
	20-64	23
	20-78	23
4108661	8-5	25
	8-6	25
	8-6	25
	8-11	3
4111365	22-49	5
	22-59	2
	22-60	4
4115008	11-23	13
	11-29	27
	11-33	30
	11-37	27
	11-39	30
	11-43	28
	11-47	28
4116399	17-29	17
	17-31	11
	18-46	19
	19-25	17
	20-39	17
4117389	11-107	6
4117899	5-19	15
	5-27	1
4118204	1-101	7
4119242	21-6	1
4119243	21-6	1
4119244	21-6	1
4119248	21-6	1
4120965	6-5	32
	11-10	43
	11-23	12
	11-29	32
	11-33	36
	11-37	30
	11-39	40
	11-43	37
	11-47	37
	11-91	21
	11-93	9
	11-95	8
	11-97	16
	11-106	19
	11-127	24
	11-129	24
	11-131	24
	11-133	24
	11-135	24
	11-137	25
	11-139	24
	11-141	25
	15-17	6
	15-19	7
	16-25	24
	16-29	6
4120966	1-9	25
	1-13	33
	1-17	28
	1-21	20
	1-23	19
4121575	2-3	19
	15-5	2
	15-9	17
	16-7	12
	16-7	12
	16-9	12
	16-9	12
	16-97	12
	16-99	12
4121672	13-9	6
	16-25	27
4122419	3-12	43
4122433	3-35	17
4122435	3-11	33
4122436	3-11	34
4122437	3-11	35
4122438	3-11	36
4122467	5-7	12
4122567	3-23	19
4122570	3-31	11
	3-33	10
	4-23	8
4122581	3-23	9
4122582	3-19	12
	3-21	11
	3-29	14
4122583	7-25	33
4122584	3-12	67
	4-17	11
	7-25	28
4122585	3-31	19
	3-33	18
	4-23	22
	4-33	11
	4-35	25
4122587	4-24	7
	4-27	7
4122588	3-15	25
	4-17	15
	4-21	5
4122592	3-7	9
4122593	3-15	26
	3-17	19
	4-7	2
4122595	3-37	24
	4-29	24
	5-30	24
4122600	3-23	20
4124255	11-17	20
	11-29	8
	11-31	5
	11-37	8
	11-43	9
	11-47	9
4124455	8-3	10
4127425	8-3	6
4129140	6-5	21
4131523	22-50	14
4133025	20-14	3
	20-69	3
4133281	18-8	14
	18-28	14
	18-65	1
	18-66	1
	19-3	7
	19-10	45
	19-14	45
	20-12	17
	20-30	17
	20-51	9
	20-53	9
	20-67	17
	20-81	17
4133804	22-85	9
4135136	11-179	13
	11-185	12
	11-192	22
	11-204	29
	11-216	23
	11-228	28
	11-239	2
	11-247	12
	11-254	28
	11-267	23
	11-281	10

NUMERICAL INDEX (continued)

PART NO.	PAGE	ITEM
	11-287	14
	11-338	3
4135137	11-198	24
	11-209	8
	11-211	33
	11-222	19
	11-234	19
	11-236	52
	11-242	48
	11-243	71
	11-260	19
	11-262	50
	11-271	1
	11-273	28
	11-294	21
	11-295	26
	11-299	7
	11-300	22
	11-321	3
	11-339	8
	11-363	1
	11-383	17
	11-387	12
4135138	11-179	10
	11-179	14
	11-185	9
	11-185	13
	11-192	19
	11-192	23
	11-198	22
	11-204	22
	11-204	30
	11-211	35
	11-216	20
	11-216	24
	11-222	17
	11-228	22
	11-228	29
	11-234	17
	11-239	3
	11-240	22
	11-244	72
	11-247	9
	11-248	13
	11-254	22
	11-254	29
	11-260	17
	11-266	16
	11-267	24
	11-273	29
	11-281	9
	11-282	16
	11-287	8
	11-287	15
	11-288	22
	11-294	5
	11-299	4
	11-325	12
	11-329	7
	11-339	4
	11-340	2
	11-359	4
	11-360	18
	11-383	13
	11-387	15
4135139	11-179	14
	11-186	24
	11-192	31
	11-205	25
	11-216	30
	11-228	4
	11-239	14
	11-248	30
	11-254	25
	11-267	8
	11-281	16
	11-288	1
	11-316	1
	11-321	5
	11-360	11
4135140	11-179	10
	11-185	20
	11-192	27
	11-204	21
	11-216	26
	11-228	12
	11-239	10
	11-247	26
	11-254	21
	11-266	12
	11-282	12
	11-287	2
	11-338	12
4135141	11-179	11
	11-185	21
	11-192	28
	11-204	22
	11-216	27
	11-228	1
	11-239	11
	11-247	27
	11-254	22
	11-266	11
	11-281	13
	11-287	

See Service Manual for service procedures.
©2026 HYSTER COMPANY

NUMERICAL INDEX (continued)

PART NO.	PAGE	ITEM
4136630	22-39	2
4136631	22-39	1
4136632	22-39	1
4136748	11-39	10
	11-43	10
	11-47	10
4137007	2-15	2
4137207	11-179	10
	11-179	11
	11-179	12
	11-179	13
	11-179	14
	11-179	15
	11-185	9
	11-185	10
	11-185	11
	11-185	12
	11-185	13
	11-186	14
	11-192	19
	11-192	20
	11-192	21
	11-192	22
	11-192	23
	11-192	24
	11-198	22
	11-198	24
	11-204	22
	11-204	27
	11-204	28
	11-204	29
	11-204	30
	11-205	31
	11-209	8
	11-211	33
	11-211	35
	11-216	20
	11-216	21
	11-216	22
	11-216	23
	11-216	24
	11-216	25
	11-222	17
	11-222	19
	11-228	22
	11-228	26
	11-228	27
	11-228	28
	11-228	29
	11-228	30
	11-234	17
	11-234	19
	11-236	52
	11-239	1
	11-239	2
	11-239	3
	11-239	4
	11-239	12
	11-239	22
	11-240	48
	11-242	71
	11-243	72
	11-244	9
	11-247	10
	11-247	11
	11-247	12
	11-247	13
	11-248	14
	11-248	22
	11-254	26
	11-254	27
	11-254	28
	11-254	29
	11-254	30
	11-255	17
	11-260	19
	11-260	50
	11-262	16
	11-266	21
	11-266	22
	11-266	23
	11-267	24
	11-267	25
	11-267	1
	11-271	28
	11-273	29
	11-273	8
	11-281	9
	11-281	10
	11-281	11
	11-281	12
	11-282	16
	11-282	8
	11-287	12
	11-287	13
	11-287	14
	11-288	15
	11-288	16
	11-288	21
	11-294	22
	11-294	26
	11-295	5
	11-299	7
	11-299	22
	11-300	1
	11-316	1
	11-321	3
	11-321	4
	11-325	

NUMERICAL INDEX (continued)

PART NO.	PAGE	ITEM
	11-329	12
	11-338	2
	11-338	3
	11-339	7
	11-339	8
	11-340	4
	11-351	8
	11-359	2
	11-360	4
	11-360	5
	11-363	1
	11-383	17
	11-384	18
	11-387	12
	11-387	13
4139422	22-85	20
4139423	22-85	21
4139859	9-8	46
	9-11	34
	9-15	38
	9-18	23
	9-21	45
	22-43	8
	22-45	8
4140361	1-27	2
	1-89	9
	1-89	12
	6-6	36
	11-7	26
	11-9	38
	11-13	31
	11-17	32
	11-23	25
	11-27	11
	11-29	25
	11-31	40
	11-33	28
	11-37	25
	11-39	28
	11-43	26
	11-47	26
	11-53	17
	11-55	14
	11-69	9
	11-83	7
	11-85	11
	11-89	30
	11-91	11
	11-93	4
	11-115	7
	11-146	23
	11-146	25
	11-157	3
	11-182	52
	11-188	40
	11-194	46
	11-200	50
	11-206	53
	11-212	57
	11-217	43
	11-224	54
	11-230	48
	11-236	57
	11-245	93
	11-250	40
	11-256	50
	11-262	55
	11-267	34
	11-274	35
	11-278	16
	11-284	40
	11-289	39
	11-296	41
	11-301	38
	11-304	17
	11-308	15
	11-312	17
	11-315	16
	11-319	5
	11-332	14
	11-336	6
	11-364	15
	11-365	6
	11-367	8
	11-371	11
	11-374	8
	11-376	8
	12-13	15
	22-25	7
	22-26	5
	22-53	8
4142048	6-3	1
4143878	11-69	13
4144310	1-87	16
4144668	11-81	19
4145044	22-85	22
4145255	22-61	4
4145952	17-5	20
	17-9	20
	17-17	20
	17-21	20
	17-44	20
	17-50	20
	19-10	44
	19-14	44
	20-3	7
	20-21	7
	20-61	7
	20-75	7
4148708	20-55	2
	20-57	2
	20-93	2
4149476	22-22	7
4149477	22-22	9
4149478	22-22	12
4149479	22-22	3
4149480	22-22	4
4149510	22-22	6
4150864	22-5	10
	22-7	12
4150893	22-5	13
	22-7	16
4151323	22-22	11
4153136	11-153	1
	14-11	13
	14-15	14
4154199	6-9	20
	6-11	25
	22-26	7
4154329	1-103	6
4154502	1-9	8
4158911	1-105	13
4158913	1-105	9
4158914	1-105	15
4159458	11-383	2
	11-383	3
	11-387	1
	11-387	2
4159715	1-105	11
4160428	8-3	11
	11-89	19
	11-329	18
	14-8	53
4163034	1-9	31
4163723	2-3	11
	2-9	7
	2-13	13
	2-19	11
4164225	1-82	14

See Service Manual for service procedures.
©2026 HYSTER COMPANY

NUMERICAL INDEX (continued)

PART NO.	PAGE	ITEM
4164432	17-35	5
4164536	13-7	12
	13-11	17
4164546	13-13	2
4165003	13-3	24
	15-13	
4165004	13-3	24
	15-13	
4165765	11-13	17
4166547	1-69	40
	1-83	18
	16-7	20
	16-9	20
	16-11	16
	16-15	18
	16-19	37
	16-22	37
	16-26	46
	16-29	38
	16-91	14
	16-93	14
4167341	11-197	1
	11-200	41
	11-209	4
	11-212	42
	11-224	43
	11-236	46
	11-244	84
	11-262	44
	11-277	9
	11-293	8
	11-296	34
	11-301	27
4168181	11-180	23
	11-186	20
	11-193	33
	11-193	36
	11-200	42
	11-205	40
	11-212	44
	11-217	34
	11-224	44
	11-229	39
	11-236	47
	11-241	40
	11-245	87
	11-248	20
	11-255	41
	11-262	45
	11-271	2
	11-278	11
	11-283	33
	11-296	35
	11-301	29
	11-325	2
	11-325	3
	11-329	10
	11-329	11
	11-390	2
4168372	11-380	2
4168707	11-53	22
	11-109	6
	11-110	9
	11-112	13
	11-333	7
	11-345	9
	11-347	9
	11-352	26
	11-356	13
4168933	6-5	4
4168940	6-5	25
4168946	6-5	8
4168947	6-5	13
4168952	11-339	9
4168954	11-304	15
	11-308	13
	11-312	14
	11-315	13
	11-340	5
4168956	11-338	1
	11-351	7
4168958	11-304	15
	11-308	13
	11-312	14
	11-315	13
	11-338	1
	11-339	9
	11-340	5
	11-351	7
4168959	11-341	5
4170106	6-5	9
4171457	6-5	3
4172274	17-5	37
	17-17	43
	18-8	25
	18-28	25
	20-8	27
	20-12	5
	20-26	27
	20-30	5
	20-78	27
4172875	11-66	3
4173258	1-99	12
4174035	22-3	2
4174036	14-7	30
4174849	20-46	22
	20-50	22
	20-90	22
4175491	18-8	13
	18-28	13
	19-3	6
	20-12	16
	20-30	16
	20-67	16
	20-81	16
4175713	14-3	23
	14-7	22
4175769	8-3	13
4176370	17-17	22
	17-21	22
	17-50	22
	18-4	19
	18-24	19
	20-22	21
	20-75	19
4176400	11-204	23
4176406	11-321	4
4176574	11-204	24
4176575	11-204	26
	11-228	25
	11-239	14
	11-254	25
	11-266	20
	11-282	13
	11-287	11

NUMERICAL INDEX (continued)

PART NO.	PAGE	ITEM
	11-373	4
	11-375	4
4176796	18-11	11
	18-11	11
	18-11	11
	18-11	11
	18-11	11
	18-11	11
	18-11	11
	18-11	11
4176836	14-3	4
	14-7	3
4176914	14-3	4
	14-7	3
4176921	11-374	5
	11-376	5
4176926	11-182	48
	11-188	39
	11-200	44
	11-212	47
	11-224	46
	11-236	49
	11-245	89
	11-250	39
	11-262	47
	11-278	14
	11-296	37
	11-301	32
4177145	11-374	9
	11-376	9
4177244	11-161	6
	11-161	14
	11-165	5
	11-165	16
	11-166	36
	11-181	31
	11-187	14
	11-197	27
	11-210	11
	11-221	11
	11-233	64
	11-243	28
	11-249	11
	11-259	31
	11-273	25
	11-295	2
	11-299	3
	11-347	23
4177249	14-3	22
	14-7	14
4177257	14-7	4
4177262	14-3	18
	14-7	17
4177272	6-5	29
4177273	6-5	36
4177279	14-3	29
	14-8	36
4177280	14-3	22
	14-8	20
4177344	1-107	17
4177345	1-107	19
	1-109	16
4177348	1-107	14
	1-109	11
4177350	1-107	8
4177353	1-107	6
4177357	1-107	4
4177358	1-107	11
4177360	1-107	7
4177916	17-37	7
	20-45	7
	20-49	7
	20-89	2
4178577	11-169	2
	11-173	9
	11-179	8
	11-185	18
	11-192	21
	11-204	19
	11-216	21
	11-228	21
	11-240	8
	11-247	21
	11-254	15
	11-266	15
	11-266	17
	11-282	7
	11-287	13
	11-304	11
	11-307	5
	11-345	4
	11-347	23
	11-352	42
4179320	17-5	42
	17-17	2
4179933	18-41	2
	20-17	2
	20-71	2
4179934	20-17	2
	20-71	2
4179935	18-41	2
	20-17	2
4179936	18-41	2
	20-17	2
	20-71	2
4179937	18-41	2
	20-17	2
4179938	18-41	2
	20-17	2
	20-71	2
4179939	18-41	2
4179940	18-41	2
	20-17	2
4179941	20-17	2
4179942	18-41	2
4179944	20-17	2
	20-71	2
4179946	18-41	2
	20-17	2
	20-71	2
4179949	18-41	2
	20-17	2
4179955	18-41	2
4179961	18-41	2
4180013	20-35	2
	20-85	2
4180014	18-41	2
	20-35	2
	20-85	2
4180015	18-41	2
	20-35	2
4180016	18-41	2
	20-35	2
	20-85	2
4180017	18-41	2
	20-35	2
4180018	18-41	2
	20-35	2
	20-85	2
4180019	18-41	2
	20-35	2
4180020	18-41	2
	20-35	2
4180021	20-35	2
4180022	20-35	2
	20-85	2
4180023	18-41	2
4180024	18-41	2
	20-35	2
4180026	20-35	2
	20-85	2
4180027	18-41	2
4180029	20-35	2
	20-85	2

See Service Manual for service procedures.
©2026 HYSTER COMPANY

NUMERICAL INDEX (continued)

PART NO.	PAGE	ITEM
4180032	18-41	2
	20-35	2
4180035	18-41	2
4180041	18-41	2
4180124	11-179	5
	11-185	5
	11-191	9
	11-203	11
	11-215	10
	11-227	12
	11-247	5
	11-253	12
	11-283	24
4180406	22-28	2
4180460	1-95	11
4185429	11-109	2
	11-110	3
	11-112	6
	11-143	1
	11-145	5
	17-37	6
	17-39	3
	17-39	4
	17-55	6
	18-53	12
	18-56	12
	18-60	12
	18-64	12
	19-9	16
	19-13	16
	19-29	3
	19-31	3
	20-45	3
	20-49	3
	20-55	13
	20-57	13
	20-89	3
	20-93	13
4185430	6-11	3
	17-5	18
	17-9	18
	17-17	18
	17-21	18
	17-44	18
	17-50	18
	18-4	14
	18-24	14
	20-3	10
	20-21	10
	20-61	10
	20-75	10
4185431	17-5	19
	17-9	19
	17-17	19
	17-21	19
	17-44	19
	17-50	19
	18-4	13
	18-8	10
	18-24	13
	18-28	10
	18-53	21
	18-56	21
	18-61	21
	18-64	21
	19-9	17
	19-13	17
	20-3	9
	20-12	26
	20-21	9
	20-30	26
	20-45	4
	20-49	4
	20-55	16
	20-61	9
	20-67	26
	20-75	9
	20-81	26
	20-89	4
4185432	18-65	1
4185433	17-5	23
	17-9	23
	17-17	23
	17-21	23
	17-44	23
	17-50	23
	20-3	5
	20-21	5
	20-61	5
	20-75	5
	22-22	15
4185434	17-37	13
	17-55	13
	19-29	9
	19-31	9
	20-8	14
	20-26	14
	20-45	8
	20-49	8
	20-63	14
	20-77	14
	20-89	8
4185436	22-57	11
4185437	1-95	19
	1-113	21
	1-117	21
4186969	21-2	1
4187428	18-45	2
4187673	20-8	21
	20-26	21
	20-45	9
	20-49	9
	20-64	21
	20-78	21
	20-89	9
4187689	6-11	2
	11-109	12
	11-110	11
	18-65	10
	18-66	10
	20-51	1
	20-53	1
4187690	1-53	11
	1-103	9
	6-9	11
	6-11	4
	11-109	14
	11-110	2
	11-112	7
	11-143	11
	11-145	8
	17-4	11
	17-8	11
	17-16	11
	17-20	11
	17-37	3
	17-39	8
	17-39	8
	17-43	11
	17-49	11
	17-55	3
	18-3	9
	18-8	9
	18-23	9
	18-28	9
	18-51	4
	18-55	4
	18-59	4
	18-63	4
	18-65	11
	18-66	11
	19-9	15
	19-13	15
	19-29	4
	19-31	4
	20-3	8
	20-8	32
	20-12	29
	20-21	8
	20-26	32
	20-45	6
	20-49	6
	20-55	15
	20-57	15
	20-61	8
	20-64	32
	20-68	29
	20-75	8
	20-78	32
	20-89	6
	20-93	15
	22-71	7
	22-73	7
4187692	1-110	3
	18-9	32
	18-28	32
	19-3	15
	19-29	17
	19-32	17
	20-12	11
	20-30	11
	20-67	11
	20-81	11
	21-6	2
	21-8	2
4187786	17-37	5
	17-55	5
	18-53	16
	18-56	16
	18-60	16
	18-64	16
	19-29	20

NUMERICAL INDEX (continued)

PART NO.	PAGE	ITEM
	19-32	20
	20-45	2
	20-49	2
	20-89	2
4187789	20-8	29
	20-26	29
4188201	18-65	2
	18-66	2
	19-3	12
	20-51	8
	20-53	8
4188211	17-39	9
	20-55	18
	20-57	18
	20-93	18
4188863	17-35	6
4188868	17-35	7
4188999	21-6	3
	21-8	3
4189066	17-4	13
	17-8	13
	17-16	13
	17-20	13
	17-44	13
	17-50	13
	18-4	17
	18-24	17
	18-51	3
	18-55	3
	18-59	3
	18-63	3
	19-9	10
	19-13	10
	20-8	31
	20-26	31
	20-64	31
	20-78	31
4189684	22-90	39
4190277	11-170	26
	11-174	23
4190278	11-162	17
	11-166	19
4190600	22-90	38
4192163	21-3	2
4193118	9-7	31
	9-11	18
	9-15	21
	9-21	29
4193301	18-8	2
	18-28	2
	20-55	3
	20-57	3
	20-57	16
	20-93	3
	20-93	16
4193853	11-69	10
4195768	1-9	20
	1-13	21
	1-17	16
	1-21	12
	1-23	11
	22-37	9
	22-38	6
	22-50	15
4195769	1-13	10
	1-17	5
	1-23	6
4196031	1-33	25
	1-35	25
	11-109	5
	11-110	10
	11-112	10
	11-115	4
	22-39	5
	22-49	3
	22-59	18
4196032	1-84	4
	1-93	2
	1-95	2
	11-70	7
	22-65	4
4196033	2-20	3
	11-79	13
4196034	22-71	6
	22-73	6
4196035	1-42	2
	22-67	6
	22-69	6
	22-71	5
	22-73	5
4196851	18-51	5
	18-55	5
	18-59	5
	18-63	5
4196852	18-51	5
	18-55	5
	18-59	5
	18-63	5
4196853	18-51	5
	18-55	5
	18-59	5
	18-63	5
4196854	18-51	5
	18-59	5
4196855	18-51	5
	18-55	5
	18-59	5
	18-63	5
4196856	18-51	5
	18-59	5
4196857	18-51	5
	18-59	5
4197844	22-55	6
4198401	13-20	3
4198533	11-79	13
	22-57	1
4198541	11-66	10
4198623	21-6	3
	21-8	3
4199465	21-3	5
4202431	22-89	30
4203826	11-152	3
4204583	7-5	8
	7-13	14
4204584	7-3	10
	7-11	15
4205335	8-3	14
4206301	13-28	2
4206307	13-28	2
4206331	13-27	3
4206474	13-22	1
	13-31	2
4206475	13-31	2
4206476	14-27	2
4206477	14-27	2
4206478	13-22	2
	13-31	3
4206479	13-31	3
4206480	14-27	3
4206481	14-27	3
4206482	13-21	
	13-31	1
4206483	13-31	1
4206484	14-27	1
4206485	14-27	1
4206632	1-17	3
	1-21	3
	1-23	3
4209005	11-101	11
	22-32	2
	22-34	2
4211908	21-6	1
4211909	21-8	1
4211911	21-6	1
4212935	1-129	1
	1-129	1
4213440	14-3	14
	14-7	4
4213802	11-76	25
4213803	15-6	11
	15-9	9
4214064	11-337	1
4215051	10-5	11
4215095	17-29	6
	18-45	11
	19-25	4
	20-39	4
4215096	17-31	6
	18-45	11
	19-25	4
	20-39	4
4215251	17-29	5
	18-45	6
	19-25	4
	20-39	4
4215252	17-31	5
	18-45	6
	19-25	4
	20-39	4
4215385	1-40	4
4215485	22-85	15
4215535	11-145	21
4215552	16-11	28
	16-15	29
	16-19	31
	16-22	30
	16-25	42
4215569	11-374	11
	11-376	11
4215659	11-81	20
	18-51	7
	18-55	7
	18-59	7
	18-63	7
4216684	11-109	3
	11-110	1

See Service Manual for service procedures.
©2026 HYSTER COMPANY

NUMERICAL INDEX (continued)

PART NO.	PAGE	ITEM
	11-112	9
	11-149	3
	11-151	4
	14-11	16
	14-15	17
	22-57	4
4216685	22-25	3
	22-26	4
	22-40	2
4216687	22-37	2
4216688	11-352	14
4216689	1-113	9
	1-117	9
	22-65	5
4216690	22-68	5
	22-70	5
4217294	17-29	
	18-46	
	19-25	4
	20-39	4
4217295	17-31	
	18-46	
	19-25	4
	20-39	4
4217830	11-70	4
4217960	22-85	4
4217961	22-85	5
4217962	22-85	6
4217963	22-85	8
4217964	22-85	24
4217965	22-85	26
4219867	18-46	24
	18-49	5
	19-7	19
	19-23	5
	19-26	20
	20-12	22
	20-30	22
	20-40	20
	20-43	5
	20-67	22
	20-81	22
4219868	19-10	46
	19-14	46
4220326	11-179	6
	11-185	5
	11-191	9
	11-203	12
	11-215	9
	11-227	11
	11-247	5
	11-253	11
	11-282	24
4220419	22-85	11
4221073	22-85	11
4221075	22-85	
4221129	11-9	15
	11-17	14
	11-29	2
	11-31	24
	11-33	2
	11-37	2
	11-39	2
	11-43	2
	11-47	2
4223111	6-5	23
4223112	6-5	26
4223240	1-57	39
	1-61	39
	1-65	39
	1-67	39
	1-69	32
4223251	16-101	22
	16-103	24
	16-105	26
	16-107	28
	16-109	14
	16-111	18
	16-114	36
	16-116	26
	16-119	30
4223252	16-101	2
	16-103	2
	16-105	2
	16-107	2
	16-109	2
	16-111	2
	16-114	2
	16-116	2
	16-119	2
4223253	16-101	6
	16-103	6
	16-105	6
	16-107	6
4223254	16-101	10
	16-103	10
	16-107	10
	16-111	15
	16-116	15
	16-119	15
4223255	16-103	14
	16-116	19
4223256	16-101	2
	16-103	2
	16-105	2
	16-109	2
	16-111	2
	16-114	2
	16-116	2
	16-119	2
4223257	16-101	6
	16-103	6
	16-105	6
	16-107	6
4223258	16-101	10
	16-103	10
	16-107	10
	16-111	15
	16-116	15
	16-119	15
4223259	16-103	14
	16-116	19
4223260	16-101	16
	16-103	19
	16-105	16
	16-107	16
	16-109	16
	16-111	20
	16-114	22
	16-116	28
	16-119	32
4223261	16-101	3
	16-101	7
	16-101	11
	16-103	3
	16-103	7

NUMERICAL INDEX (continued)

PART NO.	PAGE	ITEM
	16-103	11
	16-103	15
	16-105	3
	16-105	7
	16-107	3
	16-107	7
	16-107	11
	16-109	3
	16-109	6
	16-111	3
	16-111	6
	16-111	16
	16-114	3
	16-114	6
	16-116	3
	16-116	6
	16-116	16
	16-116	20
	16-119	3
	16-119	6
	16-119	16
4223262	16-101	20
	16-103	20
	16-105	29
	16-107	26
	16-109	15
	16-111	19
	16-114	37
	16-116	27
	16-119	31
4223263	16-101	4
	16-101	8
	16-101	12
	16-103	4
	16-103	8
	16-103	12
	16-103	16
	16-105	4
	16-105	8
	16-105	12
	16-105	24
	16-107	4
	16-107	8
	16-107	12
	16-107	15
	16-107	25
	16-109	4
	16-109	7
	16-111	4
	16-111	7
	16-111	17
	16-114	4
	16-114	7
	16-114	19
	16-114	20
	16-116	4
	16-116	7
	16-116	17
	16-116	21
	16-119	4
	16-119	7
	16-119	17
	16-119	22
	16-119	37
4223265	16-101	15
	16-105	14
	16-109	22
	16-111	26
	16-114	32
4223266	16-107	13
	16-119	19
4223269	16-105	20
	16-107	21
	16-114	25
	16-119	36
4223276	16-105	11
	16-107	14
	16-114	18
	16-119	23
4223285	17-5	38
	17-9	38
	20-8	26
4223286	17-17	38
	20-26	26
	20-78	26
4223287	18-9	28
	18-28	28
	19-3	24
	20-11	3
	20-29	3
	20-67	3
	20-81	3
4223375	18-65	4
	18-66	4
4223686	18-65	
4223689	18-65	
4223693	11-79	12
	11-110	13
	11-113	5
	18-53	15
	18-56	15
	18-60	15
	18-64	15
	19-29	11
	19-32	11
	20-45	15
	20-49	15
	20-55	5
	20-57	5
	20-89	15
	20-93	5
4223773	22-24	2
4223853	11-197	8
	11-197	10
	11-209	11
	11-209	13
	11-221	5
	11-221	7
	11-233	5
	11-233	7
	11-242	55
	11-242	57
	11-259	5
	11-259	7

©2026 HYSTER COMPANY

NUMERICAL INDEX (continued)

PART NO.	PAGE	ITEM
	11-272	16
	11-272	18
4223854	11-180	26
	11-181	30
	11-181	31
	11-186	22
	11-187	26
	11-187	27
	11-194	40
	11-197	7
	11-197	12
	11-197	13
	11-206	48
	11-209	10
	11-210	15
	11-210	16
	11-217	40
	11-221	4
	11-221	9
	11-221	10
	11-230	45
	11-233	4
	11-233	9
	11-233	10
	11-242	44
	11-242	54
	11-243	59
	11-243	60
	11-248	22
	11-248	24
	11-249	27
	11-256	47
	11-259	4
	11-259	9
	11-259	10
	11-271	10
	11-272	15
	11-272	20
	11-272	21
	11-272	21
	11-284	39
	11-288	23
	11-289	29
	11-293	1
4224587	18-45	1
4224588	18-45	1
4224589	18-45	1
4224651	17-4	1
	17-8	1
	17-43	1
	18-3	1
	18-3	1
	20-3	1
	20-3	1
	20-21	1
	20-61	1
	20-75	1
4224652	17-4	1
	17-8	1
	17-16	1
	17-20	1
	18-23	1
	20-3	1
	20-21	1
	20-61	1
	20-75	1
4224653	17-16	1
	17-20	1
	17-49	1
	18-3	1
	18-23	1
	20-3	1
	20-21	1
4224654	17-4	1
	17-8	1
	17-16	1
	17-20	1
	17-43	1
	18-3	1
	18-23	1
	20-3	1
	20-21	1
4224655	17-4	1
	17-8	1
	17-16	1
	17-20	1
	18-3	1
	18-23	1
4224656	17-4	1
	17-8	1
	17-16	1
	17-20	1
	17-49	1
	18-3	1
	18-23	1
	20-3	1
	20-21	1
4224657	17-4	1
	17-8	1
	17-16	1
	17-20	1
	17-43	1
	17-49	1
	18-3	1
	18-23	1
	20-3	1
	20-21	1
	20-61	1
	20-75	1
4224658	17-4	1
	17-8	1
	17-16	1
	17-20	1
	17-49	1
	18-3	1
	18-23	1
	20-3	1
	20-21	1
4224659	17-4	1
	17-8	1
	17-16	1
	17-20	1
	17-49	1
	18-3	1
	18-23	1
	20-3	1
	20-21	1
	20-61	1
	20-75	1
4224661	20-3	1
	20-21	1
4224662	17-4	1
	17-8	1
	17-16	1
	17-20	1
	17-43	1
	18-3	1
	20-21	1
	20-75	1
4224663	17-16	1
	17-20	1
	18-23	1
4224664	17-4	1
	17-8	1
	17-16	1
	17-20	1
	17-49	1
	18-23	1
	20-3	1
	20-21	1
	20-61	1
4224665	17-4	1
	17-8	1
	17-43	1
4224666	17-4	1
	17-8	1
	17-16	1
	17-20	1
4224667	17-16	1
	17-20	1
	17-49	1
	18-3	1
	20-3	1
	20-21	1
	20-61	1
	20-75	1

©2026 HYSTER COMPANY

NUMERICAL INDEX (continued)

PART NO.	PAGE	ITEM
4224668	17-4	1
	17-8	1
	17-43	1
	17-49	1
	18-23	1
4224669	17-4	1
	17-8	1
4224670	17-16	1
	17-20	1
	17-49	1
4224671	17-4	1
	17-8	1
	17-16	1
	17-20	1
	17-43	1
	18-3	1
	20-3	1
	20-21	1
	20-75	1
4224674	17-20	1
	18-23	1
	20-21	1
4224675	17-4	1
	17-8	1
	17-16	1
	17-20	1
	17-43	1
	17-49	1
4224676	17-4	1
	17-8	1
4224678	17-16	1
	17-20	1
	18-3	1
	18-23	1
4224680	17-4	1
	17-8	1
	17-43	1
4224681	17-4	1
	17-8	1
4224682	17-16	1
	17-20	1
	17-49	1
4224683	17-16	1
	17-20	1
4224688	17-4	1
	17-8	1
	17-16	1
	17-20	1
	17-43	1
4224742	17-25	1
	17-33	1
4224743	17-25	1
4224744	17-25	1
4224751	20-8	1
	20-8	1
	20-26	1
	20-63	1
	20-77	1
4224752	20-8	1
	20-26	1
	20-63	
	20-77	1
4224753	20-8	1
	20-26	1
4224754	20-8	1
	20-26	1
	20-63	1
	20-77	1
4224756	20-8	1
	20-26	1
4224757	20-8	1
	20-26	1
	20-63	1
	20-77	1
4224758	20-26	1
4224759	20-8	1
	20-26	1
4224761	20-8	1
	20-26	1
4224762	20-26	1
	20-77	1
4224764	20-8	1
	20-26	1
	20-63	1
4224767	20-8	1
	20-26	1
	20-63	1
	20-77	1
4224771	20-8	1
	20-26	1
	20-77	1
4224774	20-26	1
4224796	18-49	1
4224797	18-49	1
4224798	18-49	1
4224836	18-49	1
4224851	20-11	1
	20-11	1
	20-29	1
	20-67	1
	20-81	1
4224852	20-11	1
	20-29	1
	20-67	1
	20-81	1
4224853	20-11	1
	20-29	1
4224854	20-11	1
	20-29	1
	20-67	1
	20-81	1
4224856	20-11	1
	20-29	1
4224857	20-11	1
	20-29	1
	20-67	1
	20-81	1
4224858	20-29	1
4224859	20-11	1
	20-29	1
4224861	20-11	1
	20-29	1
4224862	20-29	1
	20-81	1
4224864	20-11	1
	20-29	1
	20-67	1
4224867	20-11	1
	20-29	1
	20-67	1
	20-81	1
4224871	20-11	1
	20-29	1
	20-81	1
4224874	20-29	1
4224939	11-112	8
4224951	17-4	2
4224952	17-4	2
	17-16	2
4224953	17-16	2
4224954	17-4	2
	17-16	2
4224955	17-4	2
	17-16	2
4224956	17-4	2
	17-16	2
4224957	17-4	2
	17-16	2
4224958	17-4	2
	17-16	2
4224959	17-4	2
	17-16	2
4224962	17-4	2
	17-16	2
4224963	17-16	2
4224964	17-4	2
	17-16	2
4224965	17-4	2
4224966	17-4	2
	17-16	2
4224967	17-16	2
4224968	17-4	2
4224969	17-4	2
4224970	17-16	2
4224971	17-4	2
	17-16	2
4224975	17-4	2
	17-16	2
4224976	17-4	2
4224978	17-16	2
4224980	17-4	2
4224981	17-4	2
4224982	17-16	2
4224983	17-16	2
4224988	17-4	2
	17-16	2
4227412	1-61	35
	1-67	16
	1-69	16
4227442	1-93	14
	1-95	23
4227514	1-113	23
	1-117	23
4228361	11-181	37
	11-187	31
	11-198	15
	11-210	24
	11-221	12
	11-233	12
	11-243	65
	11-249	28
	11-259	12
	11-295	25
	11-299	1
	11-299	2

©2026 HYSTER COMPANY

NUMERICAL INDEX (continued)

PART NO.	PAGE	ITEM
4229186	11-161	6
	11-165	5
	11-181	36
	11-187	31
	11-197	14
	11-210	27
	11-221	11
	11-233	11
	11-243	64
	11-249	28
	11-259	11
	11-273	31
	11-295	25
	11-299	2
	11-347	3
4229187	11-181	36
	11-187	31
	11-198	14
	11-210	27
	11-221	11
	11-233	11
	11-243	64
	11-249	28
	11-259	11
	11-273	31
	11-295	25
	11-299	2
4229521	11-181	36
	11-187	31
	11-197	14
	11-210	27
	11-221	11
	11-233	11
	11-243	64
	11-249	28
	11-259	11
	11-273	31
	11-295	25
	11-299	2
4230236	22-62	2
	22-62	2
4231398	18-9	31
	18-28	31
	20-12	13
	20-30	13
	20-67	13
	20-81	13
4231443	17-4	1
	17-4	2
	17-8	1
	17-8	2
	17-16	1
	17-16	2
	17-20	1
	17-20	2
	17-43	1
	17-43	2
	17-49	1
	17-49	2
	18-3	1
	18-8	1
	18-23	1
	18-28	1
	19-3	1
	19-7	1
	19-9	1
	19-10	40
	19-13	1
	19-14	40
	20-3	2
	20-8	2
	20-11	2
	20-21	2
	20-26	2
	20-29	2
	20-61	2
	20-63	2
	20-67	2
	20-75	2
	20-77	2
	20-81	2
4232355	19-21	1
4232357	19-21	1
4232358	19-21	1
4232359	19-21	1
4232360	19-21	1
4232917	3-3	15
	4-3	15
	5-3	14
4233556	19-10	33
	19-14	33
4234454	19-21	2
4234456	19-21	2
4234458	19-21	2
	19-21	2
4234483	19-21	2
4234501	18-8	1
4234502	18-28	1
4234503	18-8	1
	18-28	1
4234504	18-8	1
	18-28	1
4234505	18-8	1
	18-28	1
4234506	18-8	1
	18-28	1
4234507	18-8	1
	18-28	1
4234508	18-8	1
	18-28	1
4234509	18-8	1
	18-28	1
4234512	18-8	1
4234513	18-28	1
4234514	18-28	1
4234517	18-8	1
4234518	18-28	1
4234521	18-8	1
4234524	18-28	1
4234528	18-8	1
	18-28	1
4234929	7-5	15
	7-13	17
4234931	7-11	18
4235217	12-13	25
	12-15	14
4236440	14-3	1
	14-7	1
4236572	14-23	
	14-23	
4236767	11-185	5
	11-215	10
	11-227	12
	11-247	5
	11-253	12
	11-268	38
4236829	22-24	2
4236953	13-22	2
4236954	13-22	2
4236955	13-23	1
4236956	13-24	2
4238207	7-3	6
	7-11	10
4238209	7-15	17
	7-17	14
4238211	7-21	13
	7-23	14
4238212	7-8	2
4238214	7-15	7
4238215	7-15	1
	7-17	1
4238216	7-8	1
4238400	6-5	23
4238886	15-17	1
4238887	15-19	25
4238889	15-17	1
4238897	15-17	1
4238898	15-17	2
4238899	15-19	29
4238995	15-19	24
4238998	15-19	24
4239000	15-19	20
4239247	13-21	

NUMERICAL INDEX (continued)

PART NO.	PAGE	ITEM
4239250	13-21	
4239254	13-28	
4239255	13-23	
4239257	13-23	
4239261	14-23	
4239294	13-28	
4239296	13-28	
4239323	16-105	10
	16-114	15
4239324	16-105	10
	16-114	15
4239677	13-28	
4239678	13-28	
4239681	13-28	
4239682	13-28	
4239714	11-85	8
	11-87	6
4239715	11-83	17
	11-89	1
4239791	15-5	9
4239901	19-31	5
4239904	19-31	5
4239905	19-29	5
	19-31	5
4239906	19-29	5
	19-31	5
4239907	19-29	5
	19-31	5
4239908	19-29	5
	19-31	5
4239909	19-31	5
4239910	19-31	5
4239911	19-31	5
4239912	19-31	5
4239913	19-31	5
4239914	19-31	5
4239915	19-31	5
4239917	17-29	15
	17-31	15
	18-45	15
	19-25	10
	20-39	10
4240005	19-29	10
4240006	19-29	10
4240007	19-29	10
4240008	19-29	10
4240138	11-79	15
4240214	19-23	1
4240222	19-23	1
4240223	19-23	1
4240224	19-23	1
4240231	19-25	1
4240238	19-25	1
4240239	19-25	1
4240240	19-25	1
4240505	19-9	1
	19-13	1
4240506	19-9	1
	19-13	1
4240507	19-9	1
	19-9	1
	19-13	1
	19-13	1
4240508	19-9	1
	19-13	1
4240554	19-9	14
	19-13	14
4240555	19-7	10
4240558	19-10	33
	19-14	33
4240561	19-10	48
	19-14	48
4240562	19-10	51
	19-14	51
4240605	19-10	40
	19-14	40
4240606	19-10	40
	19-14	40
4240607	19-10	40
	19-10	40
	19-14	40
	19-14	40
4240608	19-10	40
	19-14	40
4240664	20-55	12
4240705	19-7	1
4240706	19-7	1
4240707	19-7	1
	19-7	1
4240708	19-7	1
4240805	19-3	1
4240806	19-3	1
4240807	19-3	1
	19-3	1
4240808	19-3	1
4240903	19-3	11
4241559	1-131	8
4241562	1-131	5
4241684	1-9	2
	1-21	2
4241954	11-316	1
4241995	1-69	26
	11-9	41
	11-13	21
	11-17	25
	11-23	18
	11-29	14
	11-33	34
	11-39	38
	11-43	15
	16-87	4
	16-89	15
	16-91	5
	16-93	5
4242165	1-84	4
	1-93	2
	1-95	2
	11-70	7
	22-5	17
	22-7	19
4242219	16-11	19
	16-15	21
	16-19	23
	16-22	23
	16-30	
4242231	1-95	14
4242773	17-37	2
	17-55	2
4242775	17-37	7
	17-55	7
4242897	17-5	33
	17-9	33
	17-17	33
	17-21	33
	17-44	33
	17-50	33
	18-8	7
	18-28	7
	19-10	38
	19-14	38
	20-8	16
	20-26	16
	20-63	16
	20-77	16
4242898	17-5	33
	17-9	33
	17-17	33
	17-21	33
	17-44	33
	17-50	33
	18-8	7
	18-28	7
	19-10	37
	19-14	37
	20-8	15
	20-26	15
	20-63	15
	20-77	15
4242899	17-5	39
	17-9	39
	17-17	39
	17-21	39
	17-25	7
	17-29	20
	17-31	20
	17-33	8
	17-44	39
	17-50	39
	18-8	23
	18-28	23
	18-46	22
	18-49	7
	19-3	19
	19-7	13
	19-10	49
	19-14	49
	19-23	7
	19-26	21
	20-8	12
	20-12	8
	20-26	12
	20-30	8
	20-40	21
	20-43	7
	20-63	12
	20-67	8
	20-77	12
	20-81	8
4243023	20-39	1
4243026	20-39	1
4243027	20-39	1
4243028	20-39	1
4243037	20-43	1
4243038	20-43	1
4243039	20-43	1
4243045	20-43	1
4243067	17-25	1
	17-33	1
4243071	17-31	1
4243072	17-31	1
4243073	17-31	1
4243085	17-29	1
4243721	7-3	15

See Service Manual for service procedures.
©2026 HYSTER COMPANY

NUMERICAL INDEX (continued)

PART NO.	PAGE	ITEM
4243722	12-5	2
4243738	8-3	17
4243739	8-3	17
4243899	21-6	1
4243992	1-57	23
	1-61	23
	1-65	12
	1-67	12
	1-69	20
4244113	17-5	45
	17-9	45
	17-17	44
	17-21	37
	19-7	11
4244114	17-44	43
	20-8	29
	20-64	29
4244128	14-23	
4244155	11-91	20
	11-97	11
	22-49	11
4244205	1-57	21
	1-61	21
	1-65	15
	1-67	15
	1-69	17
4244806	1-110	1
4244807	1-110	1
4244808	1-110	1
4244809	1-103	10
4244811	1-103	11
4244814	11-115	1
	11-115	12
4244820	1-101	11
	1-105	7
4244821	1-101	11
4245020	11-70	5
4245292	17-4	5
	17-8	5
	17-16	5
	17-20	5
	17-43	5
	17-49	5
	18-3	3
	18-23	3
	20-4	14
	20-21	14
	20-61	14
	20-75	14
4245595	2-9	15
4245596	2-13	10
	2-17	12
4245597	2-3	8
4246193	16-11	29
	16-15	30
	16-19	28
	16-22	32
	16-25	43
4246254	1-6	1
4246305	7-11	1
	7-23	9
4246309	12-3	12
4246572	17-12	2
	17-45	2
	20-14	2
	20-14	2
	20-69	2
4246573	17-12	2
	20-14	2
	20-69	2
4246574	20-14	2
4246575	17-12	2
	17-45	2
	20-14	2
	20-69	2
4246576	17-12	2
4246577	17-12	2
	20-14	2
4246578	17-12	2
	17-45	2
	20-14	2
	20-69	2
4246579	17-12	2
4246580	17-12	2
	20-14	2
4246581	17-12	2
	17-45	2
4246583	17-12	2
	20-14	2
	20-69	2
4246584	17-12	2
4246585	17-12	2
4246586	20-14	2
	20-69	2
4246587	17-12	2
	17-45	2
	17-45	2
4246588	17-12	2
4246591	20-14	2
4246631	20-32	2
	20-83	2
4246632	17-24	2
	20-32	2
	20-83	2
4246633	17-24	2
	17-51	2
	20-32	2
4246634	17-24	2
	20-32	2
	20-83	2
4246635	17-24	2
4246636	17-24	2
	17-51	2
	20-32	2
4246637	17-24	2
	17-51	2
	20-32	2
	20-83	2
4246638	17-24	2
	20-32	2
4246639	17-24	2
	17-51	2
	20-32	2
4246640	17-24	2
	20-32	2
	20-83	2
4246641	17-24	2
4246642	17-24	2
	17-51	2
	20-32	2
4246643	20-32	2
4246645	20-32	2
	20-83	2
4246648	20-32	2
	20-83	2
4246662	17-24	2
4246663	17-24	2
	17-51	2
4246666	17-24	2
	17-52	2
4246667	17-12	2
	17-24	2
	17-46	2
4246668	17-24	2
	20-32	2
4246669	17-12	2
	17-24	2
	17-46	2
	17-52	2
4246670	17-12	2
4246672	17-24	2
4246674	17-12	2
	17-46	2
4246675	17-12	2
4246676	17-24	2
	17-52	2
4246677	17-24	2
4246680	17-12	2
	17-24	2
	17-46	2
	17-52	2
4247502	13-21	1
	13-22	1
	13-28	1
4247503	13-21	1
	13-22	1
	13-28	1
4247506	13-23	1
	13-28	1
4247507	13-23	1
	13-28	1
4247508	14-23	1
4247509	14-23	1
4247512	14-23	1
4247513	14-23	1
4247543	1-30	5
4247680	12-5	8
4247681	12-5	1
4247733	11-7	2
	11-9	2
	11-13	2
	11-17	2
4247748	5-3	12
4247816	14-24	2
4247817	14-24	2
4247907	9-3	29
	10-3	31
	10-5	33
	10-9	10
4247956	2-3	2
	2-9	2
	2-13	2
	2-17	1
	2-19	2
4248010	13-22	1
4248016	14-24	1
4248129	14-24	2
4248254	11-93	10
	11-95	9
	11-97	15
4248348	7-17	10
4248745	11-85	1
	11-87	1
	11-89	5
4248847	13-21	
4248848	13-21	
4248849	13-23	
4248850	13-23	

©2026 HYSTER COMPANY

NUMERICAL INDEX (continued)

PART NO.	PAGE	ITEM
4248851	14-23	
4248852	14-23	
4248853	14-23	
4248915	20-35	9
	20-85	9
4248918	20-35	8
	20-85	8
4249125	11-7	12
	11-9	12
	11-23	17
	11-27	1
4249166	13-21	
4249167	13-23	
4249168	14-23	
4249169	14-23	
4249208	11-70	9
	11-70	11
4249499	19-10	41
	19-14	41
4249501	17-5	27
	17-9	27
	17-17	27
	17-21	27
	17-44	27
	17-50	27
	18-4	22
	18-24	22
	19-7	2
	19-9	2
	19-13	2
	20-3	4
	20-8	7
	20-21	4
	20-26	7
	20-61	4
	20-63	7
	20-75	4
	20-77	7
4249502	17-5	27
	17-9	27
	17-17	27
	17-21	27
	17-44	27
	17-50	27
	18-4	22
	18-24	22
	19-7	2
	19-9	2
	19-13	2
	20-3	4
	20-8	7
	20-21	4
	20-26	7
	20-61	4
	20-63	7
	20-75	4
	20-77	7
4249505	17-5	31
	17-9	31
	17-17	31
	17-21	31
	17-44	31
	17-50	31
	18-8	15
	18-28	15
	19-3	2
	19-7	4
	19-9	4
	19-13	4
	20-8	9
	20-12	20
	20-26	9
	20-30	20
	20-63	9
	20-67	20
	20-77	9
	20-81	20
4249506	17-5	31
	17-9	31
	17-17	31
	17-21	31
	17-44	31
	17-50	31
	18-8	15
	18-28	15
	19-3	2
	19-7	4
	19-9	4
	19-13	4
	20-8	9
	20-12	20
	20-26	9
	20-30	20
	20-63	9
	20-67	20
	20-77	9
	20-81	20
4249630	18-9	29
	18-28	29
	19-3	25
	20-12	28
	20-30	29
	20-67	28
	20-82	29
4249631	18-53	17
	18-56	17
	18-61	17
	18-64	17
4249683	8-5	22
	8-7	1
4250487	9-5	8
4250540	8-5	22
	8-7	1
4250559	8-5	22
	8-7	1
4250570	17-37	14
	17-55	14
	20-45	11
	20-49	11
	20-89	11
4250692	17-12	1
	17-45	1
	20-14	1
	20-14	1
	20-69	1
4250693	17-12	1
	20-14	1
	20-69	1
4250694	20-14	1
4250695	17-12	1
	17-45	1
	20-14	1
	20-69	1
4250696	17-12	1
4250697	17-12	1
	20-14	1
4250698	17-12	1
	17-45	1
	20-14	1
	20-69	1
4250699	17-12	1
4250700	17-12	1
	20-14	1
4250701	17-12	1
	17-45	1
4250703	17-12	1
	20-14	1
	20-69	1
4250704	17-12	1
	17-45	1
4250705	17-12	1
4250706	20-14	1
	20-69	1
4250707	17-12	1
	17-45	1
4250708	17-12	1
4250710	20-14	1
4250711	20-14	1
4250741	20-32	1
	20-83	1
4250742	17-24	1
	20-32	1
	20-83	1
4250743	17-24	1
	17-51	1
	20-32	1
4250744	17-24	1
	20-32	1
	20-83	1
4250745	17-24	1
4250746	17-24	1
	17-51	1
	20-32	1
4250747	17-24	1
	17-51	1
	20-32	1
	20-83	1
4250748	17-24	1
	20-32	1
4250749	17-24	1
	17-51	1
	20-32	1
4250750	17-24	1
	20-32	1
	20-83	1
4250751	17-24	1
4250752	17-24	1
	17-51	1
	20-32	1
4250753	20-32	1
4250754	17-24	1
4250755	17-24	1
	17-51	1
	20-32	1
	20-83	1
4250758	17-12	1
	17-24	1
	17-45	1
	20-32	1
	20-83	1
4250762	17-24	1
	17-51	1
4250763	17-24	1
4250764	17-12	1
	17-24	1
	17-45	1
	17-51	1
4250765	17-12	1

See Service Manual for service procedures.
©2026 HYSTER COMPANY

NUMERICAL INDEX (continued)

PART NO.	PAGE	ITEM
4250767	17-24	1
4250769	17-12	1
	17-45	1
4250770	17-12	1
4250771	17-24	1
	17-51	1
4250772	17-24	1
4250775	17-12	1
	17-24	1
	17-45	1
	17-51	1
4250776	20-32	1
4250817	18-8	24
	18-8	24
	20-12	10
	20-12	10
4250819	20-12	10
4250820	18-8	24
	20-12	10
4250821	18-8	24
	19-3	17
	20-12	10
4250823	18-8	24
4250824	18-8	24
	19-3	17
	20-12	10
4250825	18-8	24
	18-8	24
	20-12	10
	20-12	10
4250826	19-3	17
4250827	18-8	24
	19-3	17
4250828	17-4	4
	17-8	4
	18-8	24
	20-8	10
	20-8	10
	20-12	10
4250829	17-4	4
	17-8	4
	19-3	17
	19-7	9
4250830	18-8	24
	20-8	10
	20-12	10
	20-12	10
4250831	20-8	10
4250832	17-4	4
	17-8	4
	18-8	24
	19-7	9
	20-8	10
4250833	17-4	4
	17-8	4
4250834	17-4	4
	17-8	4
	19-7	9
	19-7	9
	20-12	10
4250835	20-8	10
4250836	17-4	4
	17-8	4
	20-8	10
4250837	17-4	4
	17-8	4
	19-7	9
4250838	17-4	4
	17-8	4
4250839	20-8	10
4250840	18-8	24
4250841	20-8	10
4250842	17-4	4
	17-8	4
4250845	17-4	4
	17-8	4
	20-8	10
4250846	17-4	4
	17-8	4
4250847	17-4	4
	17-8	4
4250849	20-8	10
4250850	17-4	4
	17-8	4
4250851	17-4	4
	17-8	4
4250854	17-4	4
	17-8	4
4250855	20-8	10
4250859	17-4	4
	17-8	4
4250860	17-4	4
	17-8	4
4250866	17-4	4
	17-8	4
4250867	17-4	4
	17-8	4
4250876	17-4	4
	17-8	4
4250917	20-30	10
4250919	18-28	24
	20-30	10
4250920	18-28	24
	20-30	10
4250921	18-28	24
	20-30	10
4250923	18-28	24
4250924	18-28	24
	20-30	10
4250925	18-28	24
	20-30	10
	20-30	10
4250927	18-28	24
	18-28	24
	20-30	10
4250928	18-28	24
	20-26	10
	20-30	10
4250929	17-16	4
	17-20	4
4250930	17-16	4
	17-20	4
	20-26	10
	20-30	10
	20-30	10
	20-30	10
4250931	20-26	10
4250932	17-16	4
	17-20	4
	20-26	10
	20-30	10
4250933	17-16	4
	17-20	4
	18-28	24
4250934	17-16	4
	17-20	4
	18-28	24
	18-28	24
	20-30	10
	20-30	10
4250935	20-26	10
4250936	17-16	4
	17-20	4
	20-26	10
4250937	17-16	4
	17-20	4
4250938	17-16	4
	17-20	4
	20-26	10
4250939	20-26	10
4250940	18-28	24
4250941	20-26	10
4250942	17-16	4
	17-20	4
4250943	17-16	4
	17-20	4
	20-26	10
4250945	17-16	4
	17-20	4
	20-26	10
4250947	17-16	4
	17-20	4
4250949	17-16	4
	17-20	4
	20-26	10
4250953	17-16	4
	17-20	4
4250954	17-16	4
	17-20	4
4250955	20-26	10
4250958	17-20	4
4250959	17-16	4
	17-20	4
	20-26	10
4250963	17-16	4
	17-20	4
4250969	17-16	4
	17-20	4
4250970	17-16	4
	17-20	4
4250976	17-16	4
	17-20	4
4251095	17-25	3
	17-29	25
	17-31	24
	17-33	3
	18-46	26
	18-49	2
4251096	17-25	3
	17-29	25
	17-31	24
	17-33	3
	18-46	26
	18-49	2
4251161	17-37	15
	17-55	15
4251351	20-35	1
	20-85	1
4251352	18-41	1
	20-35	1
	20-85	1
4251353	18-41	1
	20-35	1
4251354	18-41	1
	20-35	1
	20-85	1
4251355	18-41	1
4251356	18-41	1
	20-35	1

NUMERICAL INDEX (continued)

PART NO.	PAGE	ITEM
4251357	18-41	1
	20-35	1
	20-85	1
4251358	18-41	1
	20-35	1
4251359	18-41	1
	20-35	1
4251360	20-35	1
4251361	20-35	1
	20-85	1
4251362	18-41	1
4251363	18-41	1
	20-35	1
4251366	20-35	1
	20-85	1
4251367	18-41	1
4251370	20-35	1
	20-85	1
4251373	18-41	1
	20-35	1
4251377	18-41	1
4251401	18-41	1
	20-17	1
	20-71	1
4251402	20-17	1
	20-71	1
4251403	18-41	1
	20-17	1
4251404	18-41	1
	20-17	1
	20-71	1
4251405	18-41	1
4251406	18-41	1
	20-17	1
4251407	18-41	1
	20-17	1
	20-71	1
4251408	18-41	1
4251409	18-41	1
	20-17	1
4251410	20-17	1
4251411	18-41	1
4251413	20-17	1
	20-71	1
4251416	18-41	1
	20-17	1
	20-71	1
4251420	18-41	1
	20-17	1
4251427	18-41	1
4251484	8-5	4
4251807	12-3	3
4251936	7-3	17
	7-5	17
	7-11	20
	7-13	19
	7-15	2
	7-17	2
	7-19	2
4252015	12-5	4
4252016	12-5	6
4252056	22-35	4
	22-38	2
	22-39	3
4252073	13-3	17
4252081	8-5	16
4252124	10-13	2
4252149	20-8	22
	20-26	22
	20-64	22
	20-78	22
4252232	13-3	7
4252304	15-19	24
4252305	15-19	20
4252328	15-19	21
4252329	15-19	21
4252330	15-19	19
4252331	15-19	14
4252332	15-5	6
4252333	15-6	12
4252336	15-17	14
	15-19	5
4252338	15-17	19
	15-19	2
4252360	14-3	
4252525	8-6	32
4252576	2-20	4
4252963	1-99	15
4253172	17-25	6
	17-29	22
4253173	17-5	30
	17-9	30
	17-17	30
	17-21	30
	17-44	30
	17-50	30
	18-4	25
	18-24	25
	19-7	5
	19-9	7
	19-13	7
	20-8	6
	20-26	6
	20-63	6
	20-77	6
4253175	17-5	29
	17-9	29
	17-17	29
	17-21	29
	17-44	29
	17-50	29
	18-4	23
	18-24	23
	19-7	6
	19-9	5
	19-13	5
	20-8	3
	20-26	3
	20-63	3
	20-77	3
4253176	17-5	29
	17-9	29
	17-17	29
	17-21	29
	17-44	29
	17-50	29
	18-4	23
	18-24	23
	19-7	7
	19-9	6
	19-13	6
	20-8	3
	20-26	3
	20-63	3
	20-77	3
4253177	18-46	27
	18-49	8
	19-7	17
	19-23	8
	19-23	8
	19-26	22
	19-26	22
	20-12	18
	20-40	22
	20-43	8
4253178	17-5	25
	17-9	25
	18-8	21
	19-3	20
	19-7	14
	20-8	13
	20-12	9
4253179	17-25	6
	17-31	22
4253180	18-46	27
	18-49	8
	19-23	8
	19-26	22
	19-26	22
	20-30	18
	20-40	22
	20-43	8
4253191	9-5	15
4253222	14-3	21
	14-7	21
4253223	14-3	22
	14-7	20
4253224	14-3	20
	14-7	19
4253293	2-9	18
4253420	17-17	37
	17-21	25
	18-28	21
	20-26	13
	20-30	9
4254021	1-99	16
4254199	9-3	7
4254211	16-19	13
	16-22	12
4254414	9-8	48
	9-11	36
	9-15	40
	9-21	41
4254416	9-7	31
	9-11	18
	9-15	21
	9-21	29
4254432	9-18	16
4255011	14-3	9
	14-7	14
4255012	14-3	5
	14-7	17
4255013	16-11	23
	16-19	27
4255181	1-4	6
4255290	10-7	10
	10-11	10
4255799	9-3	23
	10-3	2
	10-5	2
	10-9	3
4256643	10-3	1
	10-5	1
	10-7	
4256694	7-3	4
	7-5	4
	7-11	7
	7-13	7
4256839	13-3	13

©2026 HYSTER COMPANY

NUMERICAL INDEX (continued)

PART NO.	PAGE	ITEM
4256894	9-15	1
4256895	9-11	1
4256904	9-7	1
4256906	9-7	1
	9-21	1
4256907	9-18	1
4256921	13-3	7
4256922	13-3	7
4256951	7-11	4
	7-13	4
	7-23	12
4256956	19-29	24
	19-32	24
4256957	19-29	12
	19-32	12
4256970	17-37	8
	17-55	8
	20-45	1
	20-49	1
	20-89	1
4256971	17-37	9
	17-55	9
	20-47	25
	20-50	25
	20-90	25
4256973	20-47	26
	20-50	26
	20-90	26
4257206	1-93	10
4257207	1-95	16
4257404	19-29	6
4257902	11-13	20
4258113	9-18	13
4258143	6-5	
4258144	6-5	28
4258146	6-5	1
4258147	6-5	14
4258244	11-324	1
4258245	11-324	1
4258423	11-121	4
4258594	17-25	1
	17-29	1
	17-31	1
	18-45	1
	18-49	1
	19-23	1
	19-25	1
	20-39	1
	20-43	1
4258696	11-149	6
	11-151	5
	22-40	3
4258710	9-5	23
4258849	20-51	
4258850	20-51	
4258851	20-53	
4258852	20-53	
4258856	9-3	3
	10-7	2
	10-11	2
4258879	16-36	8
	16-39	8
	16-41	8
	16-45	8
4258919	13-3	
	13-8	
	13-9	
4258945	9-3	28
	10-3	29
	10-5	31
	10-9	12
4258971	13-3	4
4259043	11-7	7
	11-9	7
	11-13	7
	11-17	7
4259172	13-3	
	13-8	
	13-9	
4259677	11-151	21
4259902	9-3	11
4259903	9-3	9
4259904	9-3	8
4259966	10-9	1
	10-11	
4259973	9-3	
4259982	9-3	18
4260189	14-23	
4260236	10-3	28
	10-5	23
4260495	17-37	16
	17-55	16
	20-45	9
	20-45	9
	20-49	9
	20-49	9
	20-89	9
	20-89	9
4260617	18-53	19
	18-56	19
	18-61	19
	18-64	19
4260717	6-9	8
	6-11	8
4260907	14-11	8
	14-15	9
4260908	14-11	8
	14-15	9
4260909	14-11	8
	14-15	9
4260910	10-3	14
4260915	13-3	16
4261067	10-3	26
	10-5	19
4261185	22-62	1
	22-62	1
4261322	18-45	2
4261478	1-119	6
4261479	1-119	6
4261480	1-119	6
4261481	1-119	6
4261542	1-119	13
4261554	1-119	6
4261653	1-99	11
4261657	1-99	11
4261701	16-30	3
4261795	17-39	11
4261957	16-75	7
4261958	13-8	1
4262236	12-3	2
4262327	1-9	30
	1-13	34
	1-17	29
4262332	12-3	1
4262335	1-9	22
	1-13	30
	1-17	25
	1-21	17
	1-23	16
4262336	1-9	22
	1-13	30
	1-17	25
	1-21	17
	1-23	16
4262347	9-3	30
	10-3	30
	10-5	32
	10-9	11
4262743	11-39	35
	11-43	33
	11-47	33
4262846	12-5	12
4263620	14-3	
4263621	14-3	1
	14-7	1
4263698	17-17	26
	17-21	26
	17-25	4
	17-29	24
	17-31	23
	17-33	4
	17-50	26
	18-4	21
	18-46	21
	18-49	3
	19-3	3
	19-7	3
	19-9	3
	19-13	3
	19-23	3
	19-26	24
	20-3	3
	20-8	8
	20-12	19
	20-40	24
	20-43	3
	20-61	3
	20-63	8
	20-67	19
4263787	12-3	11
	12-6	
4263788	12-3	11
	12-7	
4263842	22-7	3
4263845	22-5	1
	22-7	6
4263848	11-73	19
4263859	18-45	1
4263863	22-63	3
4263864	22-63	3
4263967	1-96	2
4263986	14-9	1
4264187	11-118	4
4264371	7-3	3
	7-5	3
	7-11	6
	7-13	6
4264372	7-3	5
	7-5	5
	7-11	8
	7-13	8
4264374	12-3	

NUMERICAL INDEX (continued)

PART NO.	PAGE	ITEM
	12-5	
4264375	12-3	
	12-5	
4264376	12-3	
	12-5	
4264924	22-27	2
4265071	8-5	22
4265244	8-5	22
4265332	1-96	1
4265340	20-39	1
4265344	11-89	13
4265369	1-96	4
4265370	1-96	4
4265501	9-5	20
4265521	2-20	1
4265852	12-3	9
4265998	1-53	14
	1-96	6
4266125	14-9	1
4266134	14-9	2
4266481	16-30	4
	16-31	
4266482	16-30	1
	16-31	
4266483	16-30	2
	16-31	
4266596	15-3	2
4266854	17-29	1
4266966	18-45	1
4267033	1-89	4
4267148	5-3	4
4267153	8-6	29
4267176	13-3	17
4267178	13-3	13
4267367	13-3	17
4267431	20-43	1
4267475	13-3	20
4267476	13-20	2
4267538	1-124	4
	1-127	4
4267539	14-9	4
4267657	1-95	18
4267796	13-28	
4268380	13-21	
4268381	13-23	
4268384	14-23	
4268385	14-23	
4268458	9-3	2
4268460	14-9	2
4268626	22-67	5
	22-68	4
	22-69	5
	22-70	4
	22-71	3
	22-73	3
4268731	1-76	13
	1-77	11
	1-82	13
	4-23	4
4268777	1-95	18
4268804	1-9	21
	1-13	29
	1-17	24
	1-21	16
	1-23	15
4268867	12-3	2
4268868	14-11	3
	14-15	4
4268874	14-23	1
4268876	14-23	1
4268877	13-21	1
4268878	13-21	1
	13-28	1
4268879	13-24	2
4268880	13-23	1
	13-28	1
4268890	14-9	
4268902	7-23	13
4268939	11-21	1
4268941	13-21	
4268943	13-21	
4268944	13-21	
4268945	13-21	
4268946	13-21	
4268949	13-28	
4268950	13-28	
4268954	13-28	2
4268955	1-57	9
	1-61	9
	1-65	29
	1-67	29
	16-7	4
	16-9	4
4268968	11-83	1
4268989	13-3	7
4268990	13-3	7
4269001	19-17	
	19-19	
4269041	11-125	6
4269252	13-3	
	13-8	
	13-9	
4269393	1-54	2
4269401	1-53	7
4269429	21-6	1
4269430	21-6	1
4269431	21-8	1
4269432	21-6	1
4269433	21-6	1
4269486	12-3	
	12-5	
4269487	12-3	
	12-5	
4269502	17-4	14
	17-8	14
	17-44	14
	17-50	14
	19-9	18
	19-13	18
	20-3	13
	20-21	13
	20-61	13
	20-75	13
4269512	12-4	20
4269581	2-15	2
4269609	20-55	11
	20-57	11
	20-93	11
4269611	20-55	4
	20-57	4
	20-93	4
4269612	20-55	6
	20-57	6
	20-93	6
4269726	9-15	27
4270141	2-3	21
4270149	19-10	41
	19-14	41
4270250	15-21	6
	15-23	1
	15-25	34
	15-33	7
	15-35	15
4270332	11-81	14
4270333	11-81	15
4270334	11-81	16
4270353	11-117	8
4270355	11-115	2
4270356	11-115	3
4270357	11-115	9
4270375	17-39	6
	20-55	9
	20-57	9
	20-93	9
4270406	1-54	3
	1-55	2
4270505	13-32	3
4270506	13-32	3
4270508	13-32	4
4270509	13-32	4
4270545	12-13	9
	12-15	9
4270626	20-55	7
	20-57	7
	20-93	7
4270630	11-307	8
	11-315	9
4270647	13-3	4
4270695	12-5	5
4270723	13-32	3
4270724	13-32	4
4270982	16-105	11
	16-107	14
	16-114	18
	16-119	23
4270989	22-36	5
4271033	12-5	7
4271246	1-5	3
4271287	6-9	4
	6-11	17
4271288	6-9	4
	6-11	15
4271381	14-7	
4271394	22-89	35
4271509	22-59	7
4271525	22-59	4
4271527	14-7	35
4271529	22-89	7
4271532	22-89	9
4271673	1-54	1
4271843	14-9	5
4271852	11-85	9
	11-87	7
4272046	9-3	5
	10-7	9
	10-11	12
4272095	17-37	10
	17-55	10
4272099	11-56	7
4272157	7-3	19
	7-5	19

©2026 HYSTER COMPANY

NUMERICAL INDEX (continued)

PART NO.	PAGE	ITEM
	7-21	12
4272397	22-71	4
	22-73	4
4272586	13-27	2
4272587	13-27	2
4272590	13-27	2
4272591	13-27	2
4272640	7-3	12
	7-5	9
	7-11	16
	7-13	15
4272647	1-4	4
4272648	1-3	4
4272698	22-30	6
	22-34	6
	22-36	7
4272790	1-124	6
4272791	1-124	2
4272792	1-124	3
4272817	22-59	10
4273194	11-7	3
	11-9	3
	11-13	3
	11-17	3
4273199	16-81	7
	16-85	7
4273208	13-3	3
4273212	22-79	5
	22-79	6
	22-83	5
	22-83	6
4273213	22-79	5
	22-79	6
	22-83	5
	22-83	6
4273298	1-57	33
	1-61	33
	1-65	22
	1-67	22
	16-81	8
	16-85	8
4273393	11-161	6
	11-161	14
	11-165	5
	11-166	16
	11-347	3
4273394	11-53	6
	11-55	8
	11-347	12
4273395	11-161	6
	11-161	14
	11-165	5
	11-166	16
	11-347	3
4273428	1-99	17
4273429	2-20	1
4273469	14-11	8
	14-15	9
4273470	14-11	8
	14-11	8
	14-15	9
	14-15	9
4273544	9-5	14
4273566	11-162	25
	11-166	22
4273789	13-20	1
4273869	1-9	15
	1-13	16
	1-17	11
	1-21	14
	1-23	13
	1-61	38
	1-67	7
	1-69	6
	1-78	3
	1-81	13
	11-149	11
	11-151	6
	22-59	5
	22-60	5
4273915	13-27	3
4273918	13-27	1
4273919	13-27	1
4273922	13-27	1
4273923	13-27	1
4274072	22-3	1
4274121	1-96	3
4274262	6-2	1
4274588	11-385	38
	11-388	26
4274656	11-143	8
	11-146	28
4275071	16-109	5
	16-111	5
	16-114	5
	16-116	5
	16-119	5
4275100	17-5	22
	17-9	22
	17-44	22
	19-9	12
	19-13	12
	20-4	21
	20-61	19
4275118	12-17	15
4275119	14-11	8
	14-15	9
4275145	15-9	2
4275148	15-9	1
4275301	22-59	4
4275418	16-125	5
	16-126	5
4275431	16-125	
	16-126	
4275509	11-53	3
	11-55	5
4275903	11-311	5
4275904	11-311	6
	11-315	6
4275913	1-53	6
4276153	11-145	18
	11-355	11
4276161	11-355	11
4276165	11-337	3
4276166	22-30	2
4276170	11-334	2
4276171	11-335	1
	11-335	3
	11-336	1
	11-336	2
	11-336	4
	11-336	5
	11-377	2
4276293	12-13	1
	12-15	1
4276298	12-13	8
	12-15	8
4276308	11-377	1
4276325	22-47	3
	22-55	1
	22-57	3
4276343	22-47	4
	22-49	13
4276349	22-47	1
	22-53	1
4276354	16-101	14
	16-105	15
	16-109	25
	16-111	29
	16-114	35
4276370	22-5	15
	22-7	18
4276377	22-5	6
	22-7	8
4276387	22-5	12
	22-7	14
4276391	22-5	9
	22-7	17
4276392	22-5	4
	22-7	10
4276658	12-3	10

©2026 HYSTER COMPANY

NUMERICAL INDEX (continued)

PART NO.	PAGE	ITEM
	12-5	10
	12-13	10
	12-15	10
4276659	12-4	23
	12-13	24
	12-15	15
	15-3	5
	15-4	4
4276772	11-51	3
	11-188	47
	11-217	45
	11-230	50
	11-250	47
	11-256	51
	11-268	37
	11-284	42
	11-290	42
	22-43	15
	22-45	15
4276773	11-143	2
4276835	14-7	29
4276856	16-109	5
	16-111	5
	16-114	5
	16-116	5
	16-119	5
4276865	1-91	5
4276948	22-43	2
	22-45	2
4276950	22-43	5
	22-45	5
4276991	1-5	2
4277099	14-7	31
4277103	1-40	1
4277104	1-40	5
4277145	1-71	4
4277146	1-71	5
4277147	1-71	6
4277162	22-43	5
4277163	9-8	45
	9-11	33
	9-15	37
	22-43	5
4277164	9-18	20
4277195	1-84	6
4277215	11-143	10
4277238	12-10	3
4277240	12-10	3
4277335	12-13	
	12-15	
	12-17	
4277405	16-25	3
	16-29	16
4277406	16-25	4
	16-29	13
4278081	1-40	
4278101	2-19	10
4278164	1-27	10
4278630	11-359	3
	11-359	6
	11-360	3
4278650	11-55	20
4278962	11-79	14
4279004	22-5	5
	22-7	7
4279056	18-52	10
	18-56	10
	18-60	10
	18-64	10
4279057	18-52	10
	18-56	10
	18-60	10
	18-64	10
4279466	8-5	25
	8-6	25
	8-6	25
	8-11	1
4279467	8-5	25
	8-6	25
	8-6	25
	8-11	2
4279468	8-11	1
4279470	8-11	4
4279626	22-20	6
4279627	22-20	7
4279632	22-24	1
4279635	22-24	3
4279693	13-7	11
	13-11	9
4279697	22-85	1
4279698	22-85	2
4279699	22-85	3
4280111	1-87	2
	22-59	5
	22-67	6
	22-69	6
	22-71	5
	22-73	5
4280189	20-40	26
4280190	20-40	26
4280219	11-117	8
4280393	10-3	21
	10-5	12
4280416	11-359	7
4280438	5-3	8
4280559	1-87	3
4280567	1-13	1
	1-17	1
4280606	11-53	23
	11-182	54
	11-188	42
	11-200	49
	11-212	49
	11-224	51
	11-236	55
	11-250	42
	11-262	53
	11-274	39
	11-296	45
	11-301	37
	11-301	37
4280612	11-87	9
	11-99	11
4280621	12-17	16
4281010	1-107	21
	1-109	18
4281154	16-97	4
	16-99	4
4281435	11-83	10
4281596	16-11	31
	16-15	11
4282121	12-6	1
	12-7	1
4282122	12-7	4
	15-42	1
4282123	12-6	
	12-7	
4282124	12-6	
	12-7	
4282125	12-7	3
4282126	12-10	2
4282377	15-25	24
4282381	11-81	3
4282447	11-81	2
4283348	12-6	5
4283349	12-6	4
4283350	12-6	4
	12-7	7
4283351	12-6	9
4283352	12-6	8
4283353	12-6	7
4283354	12-6	6
4284144	22-59	17
4284223	1-129	3
4284225	1-129	1
4284399	11-23	8
	11-29	26
	11-31	32
	11-33	29
	11-37	26
	11-39	29
	11-43	27
	11-47	27
	11-329	1
4284680	1-13	13
4284686	12-10	1
4284688	12-10	1
4284700	22-47	2
	22-53	2
4284901	15-13	
4284902	15-13	
4284954	1-96	4
4285018	22-29	1
4285117	11-93	7
	11-95	6
4285390	16-121	13

See Service Manual for service procedures.
©2026 HYSTER COMPANY

NUMERICAL INDEX (continued)

PART NO.	PAGE	ITEM
	16-123	13
4285420	22-60	1
4285480	11-73	20
	11-76	20
	11-91	13
	11-97	8
4285557	1-121	8
4286097	3-41	10
	11-9	29
	11-33	15
	11-39	15
	11-56	6
	11-391	3
4286492	17-5	38
	17-9	38
	17-44	38
	20-8	26
	20-64	26
4286493	17-17	38
	17-21	38
	17-50	38
4286499	11-7	25
	11-9	39
	11-13	27
	11-18	33
	11-23	24
	11-27	12
	11-29	28
	11-31	12
	11-33	31
	11-37	28
	11-39	31
	11-43	29
	11-47	29
4286945	16-97	16
	16-99	16
4286951	15-42	2
	15-43	3
4286952	15-42	4
	15-43	6
4286954	15-43	1
4286956	15-43	4
4287082	15-44	
4287713	1-117	22
4288211	7-21	3
	7-23	3
4288212	7-3	7
	7-5	12
	7-11	11
	7-13	10
	7-15	4
	7-17	9
	7-19	9
	7-21	8
	7-23	8
4288325	1-124	1
4288472	1-124	7
	1-127	7
4288473	1-124	6
	1-127	6
4288808	1-124	9
4288809	1-124	8
4288879	14-3	19
	14-7	6
4288881	1-128	10
4288882	1-128	7
4288883	1-128	5
4288884	1-128	7
4288885	1-128	13
4288886	1-128	14
4288887	1-128	1
4288888	1-128	2
4288889	1-128	4
4288899	11-142	1
4288905	1-124	4
4289019	19-29	16
4289068	19-29	15
4289123	1-30	3
	1-30	3
	1-31	2
4289129	1-30	3
	1-31	7
4289130	1-33	3
	1-35	3
4289131	1-33	1
	1-35	1
4289138	1-33	12
	1-35	12
4289139	1-33	7
	1-35	7
4289140	1-33	9
	1-35	9
4289141	1-45	1
4289142	1-47	1
4289143	1-45	12
4289144	1-45	13
4289267	8-6	26
	8-7	7
4289272	16-91	7
	16-93	7
	16-97	20
	16-99	20
4289366	11-109	11
4289369	22-23	4
4290933	20-55	10
4290984	16-87	2
	16-89	7
	16-91	2
	16-93	2
	16-97	11
	16-99	11
4290997	11-17	19
	11-37	7
	11-47	8
4291148	12-9	1
4291149	12-9	1
4291150	12-9	16
4291152	12-9	18
4291153	12-9	9
4291154	12-9	8
4291155	12-9	7
4291156	12-9	
4291157	12-9	
4291253	20-30	21
	20-81	21
4291286	1-128	3
4291287	1-128	12
4291288	1-128	6
4291289	1-128	11
4291291	1-128	5
4291319	7-15	13
	7-17	6
	7-19	6
4291382	11-109	13
4291411	11-93	3
	11-95	3
4291412	11-93	2
4291459	1-128	8
4291460	1-128	9
4291615	1-69	30
4291709	1-57	31
	1-61	31
	7-5	20
	7-13	21
4292327	1-82	7
4292593	1-101	1
4292621	17-29	11
	17-31	13
	18-45	12
	19-25	18
	20-39	18
4292622	17-31	13
	18-45	12
	19-25	18
	20-40	18
4292623	17-31	13
	18-45	12
	19-25	18
	20-40	18
4292675	22-26	2
4292677	22-25	2
4292846	1-105	1
4292847	1-105	2
4292848	1-105	3
4292849	1-101	13
	1-105	4
4292850	1-105	5
4292851	1-105	6
4292853	1-105	8
4292854	1-105	10
4292855	1-105	12
4292856	1-105	14
4292857	1-101	18
	1-105	16
4292858	1-101	9
	1-105	18
4292863	1-101	2
4292864	1-101	3
4292865	1-101	4
4292866	1-101	5
4292867	1-101	6
4292868	1-101	8
4292869	1-101	10
4292870	1-101	12
4292871	1-101	14
4292872	1-101	15
4292873	1-101	16
4292874	1-101	17
4292875	1-101	20
4293164	11-51	11
4293255	1-87	11
4293256	1-87	11
4293365	1-30	9
4293389	11-53	8
	11-55	11
4293716	16-32	4
	16-33	4
4293717	16-32	7
	16-33	7
4294132	11-51	4
	11-288	26

NUMERICAL INDEX (continued)

PART NO.	PAGE	ITEM
	11-332	16
4294162	11-152	7
4294676	11-51	6
4294713	1-78	9
	1-81	16
4294786	11-152	6
4294903	1-33	19
	1-35	19
	1-37	16
4294915	1-109	3
4294916	1-107	9
	1-109	5
4294917	1-107	12
	1-109	8
4294918	1-107	13
	1-109	9
4294919	1-109	11
4294920	1-107	17
	1-109	15
4295024	1-107	1
	1-109	1
4295025	1-107	2
	1-109	2
4295026	1-109	12
4295027	1-109	19
4295028	1-107	1
	1-109	1
4295029	1-107	2
	1-109	2
4295030	1-107	3
4295031	1-107	5
4295032	1-107	7
4295033	1-107	22
4295034	1-107	25
4295037	1-107	23
4295041	1-107	1
4295042	1-107	1
4295499	11-124	4
4295501	11-124	4
4295553	11-9	36
	11-17	30
	11-23	26
	11-27	13
	11-29	22
	11-31	16
	11-33	25
	11-37	22
	11-39	25
	11-43	23
	11-47	23
	11-81	17
	11-83	19
	11-89	23
4295715	22-47	6
	22-50	2
4295723	12-3	15
4295980	11-61	8
	11-62	5
	11-65	9
	17-37	4
	17-39	10
	17-55	4
	22-49	21
4296231	11-39	34
	11-43	32
	11-47	32
4296239	11-59	6
	11-61	10
	11-76	19
4296734	11-9	21
	11-33	7
	11-39	7
4297499	22-50	13
4297504	6-5	19
4297742	22-50	7
4297801	11-121	8
4297802	11-117	2
4297956	16-35	1
	16-41	1
	16-46	
4297958	16-56	1
	16-59	
4297960	16-35	4
	16-35	5
	16-41	4
	16-41	5
	16-48	
	16-56	5
	16-56	6
4297962	16-35	4
	16-41	4
	16-49	
	16-64	5
4297964	16-35	5
	16-41	5
	16-49	
	16-64	5
4297965	16-35	3
	16-48	
4297966	16-41	3
	16-48	
4297967	16-35	3
	16-49	
	16-64	4
4297968	16-41	3
	16-49	
	16-64	4
4297970	16-56	2
	16-60	
4297971	16-35	3
	16-50	
	16-56	4
4297972	16-41	3
	16-50	
	16-56	4
4297973	16-35	2
	16-51	
4297974	16-41	2
	16-51	
4297975	16-35	2
	16-53	
	16-64	3
4297976	16-41	2
	16-53	
	16-64	3
4297977	16-56	3
	16-62	
4297978	16-56	3
	16-62	
4297980	16-54	
4297984	16-35	6
	16-41	6
	16-54	
	16-56	7
	16-64	6
4297986	16-35	
	16-41	
4297987	16-35	
	16-41	
4297988	16-35	
	16-41	
	16-64	
4297989	16-56	
	16-64	
4297990	16-48	2
	16-50	1
	16-51	1
	16-62	3
4297991	16-51	9
	16-62	5
4297993	16-49	1
	16-53	5
	16-60	4
	16-67	4
4297994	16-49	3
	16-53	7
	16-60	3
	16-67	3
4297997	16-50	10
4297998	16-48	10
	16-51	17
	16-62	2
4298000	16-54	1
4298002	16-54	7
4298003	16-54	8
4298004	16-54	2
4298005	16-54	2
4298006	16-48	
	16-50	
	16-51	
	16-62	
4298007	16-49	
	16-53	
	16-60	
	16-67	
4298008	16-46	1
	16-47	1
	16-59	1
4298010	16-49	4
	16-53	8
	16-67	2
	16-77	14
4298011	16-60	2
4298012	16-51	2
	16-53	2
	16-62	4
4298062	11-81	2
4299150	15-37	2
4299151	15-37	3
4299152	15-37	4
4299153	15-37	7
4299154	15-37	5
4299155	15-37	6
4299156	15-37	10
4299157	15-37	8
4299158	15-37	9
4299159	15-37	11
4299160	15-37	12
4299161	15-37	13
4299180	19-29	13
	19-32	13
4299265	13-11	1

See Service Manual for service procedures.
©2026 HYSTER COMPANY

NUMERICAL INDEX (continued)

PART NO.	PAGE	ITEM
4299266	13-11	1
4299267	13-11	11
4299268	13-7	3
	13-11	5
4299269	13-7	4
	13-11	12
4299270	13-7	8
	13-11	15
4299271	13-7	9
	13-11	8
4299272	13-7	10
	13-11	10
4299276	13-7	13
	13-11	16
4299280	13-18	
4299281	13-7	28
	13-18	1
4299282	13-7	30
	13-18	2
4299283	13-7	29
	13-18	1
4299284	13-7	34
	13-18	3
4299285	13-7	31
	13-18	6
4299288	13-7	16
	13-19	
4299289	13-7	18
	13-19	1
4299290	13-7	24
	13-19	4
4299291	13-7	25
	13-19	8
4299292	13-7	24
	13-19	5
4299293	13-7	26
	13-19	6
4299294	13-7	27
	13-19	7
4299295	13-7	22
	13-19	10
4299296	13-7	23
	13-19	9
4299297	13-7	20
	13-19	3
4299298	13-7	19
	13-19	11
4299299	13-7	15
	13-19	13
4299312	13-13	
4299313	13-13	1
4299314	13-13	22
4299315	13-14	30
4299316	13-14	31
4299317	13-13	14
4299318	13-13	15
4299319	13-13	17
4299320	13-13	16
4299321	13-13	24
4299322	13-14	29
4299323	13-13	19
4299324	13-13	20
4299325	13-13	21
4299326	13-13	23
4299327	13-13	12
4299328	13-13	11
4299329	13-13	13
4299330	13-13	10
4299331	13-13	5
4299332	13-13	18
4299333	13-13	3
4299347	13-13	
4299348	13-13	1
4299355	13-17	
4299356	13-17	12
4299357	13-17	6
4299358	13-17	8
4299359	13-17	7
4299360	13-17	9
4299361	13-17	5
4299362	13-17	4
4299363	13-17	2
4299364	13-17	1
4299365	13-17	11
4299366	13-17	15
4299367	13-17	15
4299368	13-17	15
4299369	13-17	16
4299370	13-17	17
4299371	13-17	19
4299372	13-17	18
4299373	13-17	20
4299374	13-17	21
4299375	13-17	22
4299376	13-17	14
4299377	13-17	10
4299378	13-17	3
4299379	13-17	23
4299380	13-17	24
4299598	12-4	21
4299599	13-13	
4299600	13-13	24
4299601	13-14	26
4299602	13-14	29
4299605	13-13	
4299639	22-49	26
4299640	22-49	10
4299898	16-25	7
	16-29	28
4301152	11-152	2
4301533	16-81	9
4301634	16-77	14
4301948	1-4	4
4302292	22-86	
4302295	22-55	8
4302296	22-55	9
4302297	22-55	4
4302300	22-55	4
4302302	22-55	5
4302376	22-28	6
4302420	2-17	2
4302525	16-127	2
4302934	11-152	5
4303007	3-5	
4303008	3-5	2
	4-5	2
4303009	3-5	6
	4-5	4
4303010	3-5	7
	4-5	5
4303011	3-5	4
	4-5	6
	5-7	9
4303012	3-5	8
	4-5	7
4303013	3-5	5
	4-5	8
4303014	3-5	9
	4-5	9
4303015	3-5	13
	4-5	12
4303016	3-5	10
	4-5	10
4303017	3-5	12
4303018	3-5	11
	4-5	11
4303019	3-5	11
	4-5	11
4303020	3-5	10
	4-5	10
4303021	3-7	7
4303022	3-7	5
	4-7	10
	4-17	6
4303023	3-7	3
4303024	3-7	4
4303025	3-7	11
4303026	3-7	12
	4-7	8
4303027	3-7	16
4303028	4-5	1
4303029	4-5	13
4303030	3-29	15
	4-5	14
4303031	3-29	16
	4-5	15
4303033	2-9	9
	2-11	7
	2-13	15
	2-15	8
4303034	2-11	5
	2-15	6
4303035	2-11	2
4303039	2-7	4
	2-11	8
	2-15	9
4303040	2-9	11
	2-11	4
4303041	2-5	8
4303042	2-5	9
	2-15	9
4303044	2-15	2
4303045	2-15	1
4303047	2-13	17
	2-15	4
4303230	3-25	5
	3-29	17
	4-5	16
	4-14	13
4303231	4-7	1
4303232	4-7	4
4303233	4-7	9
	4-11	5
4303234	4-7	11
4303235	3-29	13
	4-7	13
4303236	3-7	17
	4-7	5
4303237	3-25	11
	4-8	1
4303238	3-25	12
	4-8	2
4303239	3-25	13
	4-8	3
4303240	4-21	1

NUMERICAL INDEX (continued)

PART NO.	PAGE	ITEM
4303241	4-21	2
4303242	4-21	8
4303243	4-21	11
4303244	3-27	9
	4-21	12
4303245	3-27	10
	4-21	13
4303246	4-8	5
4303247	3-9	5
	4-8	6
	5-17	3
4303248	3-9	4
	4-8	8
4303249	3-9	9
	4-8	9
4303254	2-11	2
4303258	2-15	1
4303261	2-5	2
	2-7	8
4303291	22-49	8
4303351	22-53	3
4303373	11-110	12
4303779	22-55	14
4303780	12-3	
	12-5	
4303782	11-99	16
4303829	22-50	10
4303979	1-87	5
4304118	7-21	2
	7-23	2
4304265	1-53	26
4304280	1-28	1
4304281	1-28	2
4304282	1-28	4
4304283	1-28	5
4304284	1-28	6
4304447	15-9	1
4304448	3-9	10
	4-8	10
4304449	4-14	1
4304450	4-14	2
4304451	3-23	15
	4-14	4
4304452	3-23	2
	4-14	6
4304453	4-14	7
4304454	4-14	9
4304455	3-23	8
	4-14	11
4304456	4-14	12
4304458	3-25	18
	4-13	5
4304459	3-25	19
	4-13	6
4304460	3-25	20
	4-13	7
4304461	3-25	21
	4-13	8
4304462	3-25	20
	4-13	7
4304463	4-13	1
4304464	4-13	2
4304465	3-25	16
	4-13	3
4304466	3-25	17
	4-13	4
4304467	4-13	10
4304468	3-25	3
	4-13	12
4304469	3-25	6
	4-13	14
4304470	3-25	7
	4-13	15
4304471	4-13	17
4304472	4-11	15
4304473	4-11	16
4304474	4-11	18
4304475	4-11	19
4304476	4-11	20
4304477	4-11	21
4304478	3-11	6
	4-11	22
4304479	4-11	23
4304480	4-11	24
4304481	4-11	27
4304482	4-11	29
4304483	4-11	31
4304484	4-11	32
4304485	4-11	33
4304486	4-11	35
4304487	4-11	36
4304488	3-9	16
	3-11	10
	3-15	6
	3-17	6
	3-19	20
	3-21	19
	4-11	40
4304489	4-11	1
4304490	4-11	2
4304491	3-19	6
	3-21	6
	3-35	30
	3-45	4
	4-11	3
	7-7	16
	7-25	31
4304493	4-11	7
4304494	4-11	8
4304495	4-11	9
4304496	4-11	10
4304497	4-11	11
4304498	4-11	12
4304499	3-9	3
	3-12	45
	3-23	12
	4-11	13
	4-35	15
4304500	4-11	14
4304501	4-17	1
4304502	4-17	2
4304503	3-12	58
	4-17	3
4304504	4-17	4
4304505	4-17	5
4304506	4-17	7
4304507	4-17	8
4304508	4-17	7
4304509	4-17	9
4304510	4-17	10
4304511	4-17	12
4304512	4-17	16
4304513	4-17	18
4304514	4-17	19
4304515	3-19	1
	3-21	1
	4-19	1
4304516	3-21	21
	4-19	2
4304517	4-19	3
4304518	4-19	4
4304519	4-19	5
4304520	4-19	6
4304521	4-19	7
4304522	4-19	8
4304523	4-19	9
4304524	4-19	10
4304525	4-19	11
4304526	3-27	1
	4-21	15
4304527	3-27	2
	4-21	16
4304528	4-21	19
4304529	4-21	20
4304530	4-21	21
4304531	4-21	21
4304532	4-21	21
4304533	4-21	22
4304534	3-27	18
	4-21	23
4304535	4-21	24
4304536	3-27	19
	4-21	25
4304537	4-21	26
4304538	3-27	21
	3-27	23
	4-21	27
	4-21	30
4304539	3-31	38
	3-31	44
	3-35	27
	4-21	28
	4-21	31
4304540	4-21	29
4304543	3-31	1
	3-33	1
	4-23	7
4304544	4-23	1
4304545	4-23	2
4304546	3-31	7
	3-33	5
	4-23	3
4304547	3-31	29
	3-33	9
	3-33	28
	4-23	5
4304548	3-31	20
	3-33	19
	4-23	11
4304549	3-31	21
	3-33	20
	4-23	12
4304550	3-31	22
	3-33	21
	4-23	13
4304551	3-31	23
	3-33	22
	4-23	14
4304552	3-31	25
	3-33	24
	4-23	16
4304553	3-31	14
	3-33	13
	4-23	17
4304554	3-31	15
	3-33	14
	4-23	18
4304555	3-31	16

See Service Manual for service procedures.
©2026 HYSTER COMPANY

NUMERICAL INDEX (continued)

PART NO.	PAGE	ITEM
	3-33	15
	4-23	19
4304556	3-31	17
	3-33	16
	4-23	20
4304557	3-31	18
	3-33	17
	4-23	21
	4-33	10
4304558	4-24	1
	4-27	1
4304559	4-24	2
	4-27	2
4304560	4-24	3
	4-27	3
4304561	4-24	4
	4-27	4
4304562	4-24	5
	4-27	5
4304563	4-24	6
	4-27	6
	4-35	13
4304564	4-24	8
	4-27	9
4304565	4-24	9
	4-27	10
4304566	4-24	10
	4-27	11
4304567	4-24	11
	4-27	12
4304568	4-24	12
	4-27	13
4304569	4-24	13
	4-27	14
4304570	3-37	1
	4-29	1
4304592	3-37	23
	4-29	23
4304593	3-39	1
	4-31	1
4304594	3-39	2
	4-31	2
	4-31	2
4304596	4-31	13
4304600	3-39	27
	4-31	28
4304601	4-31	30
4304602	4-35	22
4304603	4-35	23
4304604	4-35	24
4304605	4-35	1
4304606	4-35	2
4304607	4-35	3
4304608	4-35	4
4304609	4-35	5
4304610	4-35	6
4304611	4-35	8
4304612	4-35	10
4304613	3-35	23
	3-43	11
	4-35	11
4304614	4-35	12
4304616	3-23	11
	4-35	14
4304618	3-9	2
	4-35	16
4304620	3-29	1
	4-35	17
	5-23	6
4304621	3-31	26
	3-33	25
	4-35	18
	5-25	11
4304622	4-35	19
4304623	4-35	20
4304625	4-35	27
4304632	7-25	32
4304633	3-35	29
4304635	3-12	51
4304639	3-11	4
4304640	3-11	5
4304641	3-31	28
4304642	3-19	31
4304645	3-12	46
4304646	3-11	23
4304647	3-11	26
4304652	11-89	21
4304653	11-89	29
4304685	14-19	1
4304686	14-19	7
4304687	14-19	10
4304690	14-19	5
	14-21	7
4304691	14-19	3
	14-21	6
4304692	14-19	6
	14-21	5
4304693	14-19	4
	14-21	3
4304694	14-19	9
4304695	14-21	1
4304696	14-21	4
4304697	14-21	12
4304698	14-19	11
	14-21	9
4304699	14-19	12
	14-21	10
4304700	14-21	8
4304705	1-5	1
4304706	1-5	1
4304707	1-5	1
4304708	1-5	1
4304709	1-5	1
4304749	22-47	5
	22-50	11
4304787	3-29	3
4304789	3-27	13
4304791	3-29	2
4304793	3-29	5
4304804	3-11	31
4304805	3-11	7
4304806	3-11	15
4304809	3-11	39
4304810	3-29	9
4304812	3-31	10
	3-33	8
4304813	3-11	17
4304815	3-11	32
4304822	3-31	3
	3-33	3
4304823	3-31	4
4304824	3-31	5
4304825	3-31	6
	3-33	4
4304829	3-27	6
4304845	3-9	14
4304847	3-27	15
4304848	3-19	7
	3-19	19
	3-21	18
4304851	3-29	11
4304854	3-19	45
4304855	3-19	32
4304856	3-25	1
4304858	3-11	1
4304859	3-11	2
4304862	3-27	16
4304863	3-27	17
4304864	3-35	24
4304865	3-9	17
4304873	3-11	16
4304876	3-27	12
4304877	3-19	41
	3-21	28
4304880	3-43	9
4304881	3-31	31
	3-31	33
	3-31	35
	3-33	30
	3-33	32
	3-33	34
4304882	3-12	59
4304883	3-12	66
4304884	3-12	60
4304885	3-11	24
4304886	3-11	40
4304887	7-25	26
4304888	3-11	38
4304889	3-11	20
4304890	3-11	25
4304891	3-12	61
4304892	3-15	5
	3-17	5
4304893	3-12	62
4304894	3-15	14
	3-17	7
4304895	3-15	29
4304896	3-15	30
4304897	3-19	8
4304898	3-19	10
	3-21	9
	7-25	18
4304899	3-11	41
4304900	3-11	42
4304901	3-19	13
	3-21	12
4304902	3-19	14
	3-21	13
4304903	3-15	23
	3-17	16
4304904	3-15	24
	3-17	17
4304905	3-19	39
	3-21	26
4304906	3-19	28
	3-21	31
4304907	3-19	27
	3-21	32
4304908	3-23	5
4304911	3-45	10
	7-7	10
	7-25	6
4304912	7-25	19
4304913	7-25	23
4304914	7-25	24
4304915	7-25	25
4304916	7-25	22
4304918	3-23	13

NUMERICAL INDEX (continued)

PART NO.	PAGE	ITEM
4304919	3-23	21
4304920	3-23	23
4304921	3-23	14
4304922	3-23	22
4304923	3-23	24
4304924	3-23	16
4304925	3-23	18
4304926	3-35	2
4304927	3-35	3
4304928	3-35	4
4304929	3-35	5
4304930	3-35	6
4304931	3-35	7
4304932	3-35	10
4304933	3-35	13
4304934	3-35	14
4304935	3-35	15
4305016	7-15	15
	7-17	12
	7-19	19
	7-21	10
4305017	7-15	15
	7-17	12
	7-21	10
4305018	7-3	2
4305019	7-3	2
4305020	3-35	26
4305021	3-15	18
	3-17	11
4305022	3-15	19
	3-17	12
4305023	3-35	18
4305024	3-35	20
4305025	3-35	22
4305026	3-43	22
4305028	3-43	5
	3-45	5
	7-7	17
	7-25	34
4305029	3-43	4
4305030	3-15	16
	3-17	9
4305031	3-15	15
	3-17	8
4305032	3-19	3
	3-21	3
4305033	3-15	8
4305034	3-25	14
4305035	3-25	15
4305036	3-25	14
4305037	3-25	15
4305039	3-27	22
4305040	3-35	9
4305041	3-12	64
4305042	3-9	6
4305043	3-11	37
4305044	3-15	1
	3-17	1
4305046	3-19	22
4305047	3-19	23
4305048	3-19	24
4305049	7-25	16
4305050	7-25	17
4305051	3-19	34
4305052	3-23	3
4305053	3-31	30
	3-33	29
4305054	3-35	12
4305055	3-35	19
4305056	3-35	21
4305057	3-12	55
4305059	3-11	30
4305060	3-15	3
	3-17	3
4305061	3-15	2
	3-17	2
4305062	3-19	2
4305063	3-15	17
	3-17	10
4305065	7-25	7
4305066	7-25	8
4305067	7-25	10
4305068	7-25	11
4305069	3-15	9
4305070	3-27	14
4305071	3-29	4
4305072	3-29	10
4305073	7-25	3
4305074	3-31	36
	3-33	35
4305075	3-31	34
	3-33	33
4305076	3-35	1
4305077	3-35	11
4305078	3-12	65
4305079	3-12	57
4305081	3-12	52
4305082	3-12	53
4305083	3-11	13
4305084	3-19	36
4305085	3-19	26
4305087	3-19	35
4305088	3-19	29
4305089	3-19	40
	3-21	27
4305090	3-19	17
	3-21	16
4305091	3-19	18
	3-21	17
4305092	7-5	6
	7-13	9
	7-25	1
4305093	7-25	2
4305094	7-25	4
4305095	7-25	9
4305096	7-25	12
4305097	7-25	20
4305098	7-25	21
4305099	7-25	27
4305100	3-19	43
4305101	3-15	7
4305104	3-25	9
4305105	3-27	5
4305106	3-27	7
4305107	3-27	27
	3-31	2
4305108	3-7	10
4305110	3-27	20
4305111	3-31	32
4305112	3-31	37
4305113	3-31	39
4305114	3-31	40
4305115	3-31	41
4305116	3-31	43
4305117	3-35	28
4305119	3-31	45
	3-33	38
4305120	7-25	30
4305122	3-19	43
4305124	3-43	1
4305125	3-43	2
4305126	3-43	3
4305127	3-43	5
4305128	3-43	10
4305129	3-19	16
	3-21	15
4305130	7-25	5
4305131	3-19	25
4305132	3-19	15
	3-21	14
4305133	3-19	4
	3-21	4
4305134	3-19	30
	3-21	23
4305136	3-29	6
4305137	3-15	20
	3-17	13
4305140	3-15	21
	3-17	14
4305141	3-29	12
4305142	3-15	10
4305143	3-15	11
4305144	3-12	63
	3-15	12
4305145	3-15	13
4305146	3-35	25
4305148	3-19	9
4305149	3-31	42
4305150	3-29	7
4305152	3-27	24
4305158	3-15	4
	3-17	4
4305159	3-15	22
	3-17	15
4305160	3-15	27
	3-17	20
4305161	3-11	3
4305164	3-43	8
4305464	22-49	4
4305479	1-129	2
	1-130	4
4305908	22-49	6
4305909	22-50	12
4305933	16-81	10
4305934	15-9	1
4305935	15-9	1
4306145	1-4	7
4306146	1-4	7
4306147	1-3	6
4306148	1-3	6
4306702	3-3	6
	4-3	6
	5-3	7
4306703	3-3	2
	4-3	2
	5-3	2
4306705	1-17	2
	1-23	2
4307108	11-31	9
4307111	1-87	1
4307116	1-87	1
4307150	1-13	11
	1-17	6
4307182	1-9	1
4307183	1-21	1
	1-23	1
4307184	1-21	1
	1-23	1

See Service Manual for service procedures.
©2026 HYSTER COMPANY

NUMERICAL INDEX (continued)

PART NO.	PAGE	ITEM
4307185	1-21	1
	1-23	1
4307212	3-3	3
	4-3	3
4307301	3-3	1
	4-3	1
	5-3	1
4307344	1-13	5
4307345	1-13	4
4307346	1-13	7
4307348	13-7	1
4307349	13-7	1
4307350	13-7	2
4307351	13-7	14
4307352	13-7	15
4307400	7-13	5
4307402	7-11	5
4307518	1-13	6
4307528	3-3	3
	4-3	3
4307581	22-49	28
4307585	5-3	2
4307586	5-3	1
4307848	1-99	18
4307899	5-3	3
4307989	1-119	16
4308107	7-13	1
4308533	3-3	11
	4-3	11
	5-3	13
4308924	8-6	30
4308925	8-5	11
	8-6	31
4308991	8-6	30
	8-6	31
4309225	11-365	6
	11-367	8
	11-369	10
	11-371	11
4309253	1-99	11
4309254	1-99	16
4309267	1-93	10
4309268	1-95	16
4309300	1-99	15
4309301	1-99	11
4309322	15-3	1
4309585	10-3	25
	10-5	18
4309714	6-9	16
4309715	6-9	7
4309799	11-69	6
4309800	11-117	7
4309801	11-81	19
	11-115	4
	11-117	3
	11-117	6
	11-120	3
	11-121	5
	11-124	7
	11-121	3
	11-124	5
	22-30	5
	22-32	5
	22-34	4
	22-35	3
	22-36	4
	22-65	4
4309802	22-36	3
4309803	1-61	27
	1-69	8
	22-65	8
4309804	1-9	39
	1-13	22
	1-14	45
	1-17	17
	1-18	40
	1-21	21
	1-23	20
	1-23	30
4309805	1-9	18
	1-13	19
	1-14	45
	1-17	14
	1-18	40
	1-21	11
	1-23	10
	1-23	30
4309806	11-117	12
	22-36	6
	22-37	5
4309807	11-120	5
	11-122	9
	11-124	5
4309808	22-37	3
	22-60	6
4309809	1-13	36
	1-17	31
4309811	1-13	35
	1-17	30
4309812	1-99	6
4309813	1-9	19
	1-13	20
	1-17	15
	1-21	22
	1-23	21
	22-37	8
	22-38	5
4309912	1-13	28
	1-17	23
	1-23	22
4310050	1-9	17
	1-21	10
4311444	1-130	5
4311446	1-130	5
	1-130	5
4311447	1-129	2
4311525	1-129	4
	1-130	4
4311569	16-125	6
4311571	16-125	7
	16-126	6
4311795	1-91	2
4311796	1-91	3
4311797	1-91	4
4311818	16-35	
	16-41	
	16-64	
4311819	16-56	
	16-64	
4311882	1-53	5
4312481	11-89	14
4312482	11-23	11
	11-29	35
	11-31	35
	11-33	39
	11-37	33
	11-39	43
	11-43	39
	11-47	40
	11-151	18
	11-329	5
4312486	11-62	1
4312819	1-93	11
	1-95	17
4312820	1-93	13
	1-95	22
4312821	1-93	12
	1-95	21
	11-81	18
4312823	11-216	16
	11-228	18
	11-240	24
	11-254	18
	11-366	2
	11-368	2
	11-371	12
4312824	11-188	49
	11-215	5
	11-218	47
	11-222	24
	11-227	7
	11-230	52
	11-234	24
	11-241	34
	11-250	49
	11-253	7
	11-315	3
	11-340	2
	11-340	3
4312825	11-186	21
	11-187	28

NUMERICAL INDEX (continued)

PART NO.	PAGE	ITEM
	11-217	32
	11-223	30
	11-229	37
	11-234	30
	11-239	10
	11-248	21
	11-250	34
	11-255	39
	11-260	28
	11-315	1
4312827	11-155	3
	11-161	11
	11-165	12
	11-186	15
	11-216	27
	11-223	32
	11-229	32
	11-235	34
	11-239	5
	11-248	15
	11-255	32
	11-261	32
4313412	1-71	7
4313413	1-71	9
	1-72	14
	1-75	16
4313414	1-71	10
	1-72	9
	1-75	11
4313415	1-71	11
4313416	1-71	12
4313417	1-71	13
	1-72	4
	1-75	5
4313418	1-71	1
	1-75	4
4313419	1-71	14
4313428	11-73	23
	11-76	23
	11-91	28
	11-97	3
4313431	11-73	17
	11-76	17
	11-91	27
	11-97	2
4314255	12-4	16
4314256	12-3	15
4314555	17-39	2
	20-55	20
	20-57	20
	20-93	20
4314974	17-39	1
	20-55	1
	20-57	1
	20-93	1
4315194	1-53	18
4315195	1-53	17
4315608	22-62	1
4315609	22-62	2
4315610	22-62	1
4315611	22-62	2
4315803	11-91	29
	11-97	4
4315811	11-23	10
	11-29	34
	11-31	34
	11-33	38
	11-37	32
	11-39	42
	11-43	44
	11-47	39
	11-329	4
4315839	11-65	7
4315847	11-29	15
	11-37	15
	11-43	16
	11-47	16
4316680	9-3	17
4317515	11-374	12
	11-376	12
4318030	11-143	5
4318090	8-11	6
	8-13	6
4318210	11-33	16
	11-39	16
4318273	11-79	14
4318428	2-17	1
4318458	11-9	31
	11-23	1
	11-33	18
	11-39	18
4318650	22-9	5
	22-12	5
	22-14	4
	22-16	4
	22-18	5
	22-20	2
4318686	16-7	5
	16-9	5
4318786	1-23	8
4318979	17-29	14
	17-31	14
	18-46	18
	19-25	16
	20-39	16
4319033	11-120	3
4319558	11-79	14
4319908	11-95	2
4319909	11-23	27
	11-29	39
	11-31	36
	11-33	43
	11-37	37
	11-40	47
	11-43	43
	11-47	44
	11-329	6
4319935	1-14	44
	1-18	39
	1-23	31
4320004	11-9	23
	11-33	9
	11-39	9
	11-39	35
	11-43	33
	11-47	33
4320305	15-3	2
4320306	15-3	1
4320307	12-3	15
4320308	12-3	15
4320471	1-6	3
4320472	1-6	4
4321096	11-21	4
4321282	1-57	41
	1-61	41
	1-65	41
	1-67	41
	1-69	34
4321306	11-241	38
	11-265	6
	11-289	33
	11-384	21
	11-388	17
4321958	16-101	23
	16-103	23
	16-105	25
	16-107	27
	16-109	21
	16-111	25
	16-114	27
	16-116	24
	16-119	25
4322358	22-53	12
4322829	9-3	13
4322830	13-9	1
4322853	16-64	2
	16-67	
4322856	16-7	15
	16-9	15
4322857	16-60	
4322989	1-129	3
4322990	1-129	3
4323128	16-7	9
	16-9	9
4323129	16-7	9
	16-9	9

See Service Manual for service procedures.
©2026 HYSTER COMPANY

NUMERICAL INDEX (continued)

PART NO.	PAGE	ITEM
4323559	11-51	8
4323561	11-307	7
	11-315	10
	11-352	11
4323562	11-307	7
	11-315	10
	11-352	11
4323723	10-5	7
4323730	8-3	17
4323832	9-5	8
4323952	7-5	8
	7-13	14
4323953	7-3	10
	7-11	15
4323992	9-8	45
	9-11	33
	9-15	37
	9-21	46
4323994	22-45	5
4324052	10-5	15
4324369	11-53	14
	11-55	20
4324396	22-45	5
4325287	1-127	1
4325288	1-127	2
4325289	1-127	5
4325290	1-127	4
4325291	1-127	3
4325346	1-127	8
4325392	16-47	4
	16-53	19
	16-59	4
4325431	22-27	2
4325485	1-131	1
4325486	1-131	6
4325487	1-131	7
4325488	1-131	2
4325520	1-71	15
	1-72	16
4325521	1-71	16
	1-72	17
	1-75	19
4325523	1-75	18
4325530	15-4	1
	15-43	
4325532	7-13	5
4325541	1-40	2
4325657	19-3	21
4325658	19-7	15
	20-8	18
	20-26	18
	20-63	18
	20-77	18
4325672	1-131	3
4325719	14-9	8
4326057	1-13	18
	1-17	13
	1-23	9
4326266	12-17	15
4326271	9-11	1
4326457	20-46	19
	20-50	19
	20-89	19
4326458	20-46	18
	20-50	18
	20-89	18
4326837	16-11	19
	16-15	21
	16-19	23
	16-22	23
	16-30	
4326838	16-11	19
	16-15	21
	16-19	23
	16-22	23
	16-25	35
4326842	22-62	6
4326843	22-62	5
4327096	1-48	1
4327097	1-48	2
4327098	1-48	2
4327099	1-48	2
4327100	1-48	1
4327101	1-48	1
4327449	18-28	17
4327687	11-23	17
	11-33	16
4327803	12-4	18
4327804	12-17	23
4327805	15-25	26
4327859	12-3	15
4327882	20-46	21
	20-50	21
	20-89	21
4327985	1-33	2
	1-35	2
4327986	1-33	4
	1-35	4
4327987	1-33	5
	1-35	5
4327988	1-33	8
	1-35	8
4327999	1-45	2
4328000	1-45	3
4328001	1-45	4
	1-47	4
4328002	1-45	5
4328003	1-45	6
	1-47	6
4328004	1-45	7
	1-47	7
4328005	1-33	15
	1-35	15
	1-45	8
	1-47	10
4328006	1-45	9
	1-47	11
4328007	1-45	10
	1-47	8
4328008	1-45	11
4328009	1-45	14
4328010	1-47	2
4328011	1-47	3
4328012	1-47	5
4328013	1-47	9
4328014	1-33	14
	1-35	14
4328404	1-131	9
4328674	22-22	1
4328702	11-69	7
4328708	16-69	9
	16-71	9
4328709	1-53	23
4328737	11-51	13
4328796	3-3	12
	4-3	12
4328797	3-3	7
	4-3	7
4328799	11-70	8
4328840	3-3	8
	4-3	8
4329171	1-9	1
	1-13	1
	1-17	1
4329737	22-85	1
4329738	22-85	2
4329768	15-38	5
4329902	1-6	
4329904	11-125	6
4330059	17-29	2
	18-45	3
	19-25	2
	20-39	2
4330083	17-31	2
	18-45	3
	19-25	2
	20-39	2
4330084	17-31	2
	18-45	3
	19-25	2
	20-39	2
4330085	17-31	2
	18-45	3
	19-25	2
	20-39	2
4330659	11-151	17
4331031	1-53	22
4331375	11-185	9
	11-185	10
	11-185	11
	11-185	13
	11-186	14
	11-186	20
	11-216	21
	11-216	22
	11-216	25
	11-222	17
	11-222	19
	11-228	22
	11-228	26
	11-228	27
	11-229	30
	11-234	17

NUMERICAL INDEX (continued)

PART NO.	PAGE	ITEM
	11-234	19
	11-236	52
	11-239	1
	11-239	4
	11-239	12
	11-240	22
	11-243	71
	11-244	72
	11-247	9
	11-247	10
	11-247	11
	11-248	13
	11-248	14
	11-254	22
	11-254	26
	11-254	27
	11-255	30
	11-260	17
	11-260	19
	11-262	50
	11-266	16
	11-266	21
	11-266	22
	11-267	25
	11-271	1
	11-273	28
	11-273	29
	11-287	8
	11-287	12
	11-287	13
	11-288	16
	11-299	5
	11-299	7
	11-300	22
	11-338	2
	11-339	7
	11-339	8
	11-340	4
	11-351	8
	11-383	17
	11-384	18
	11-387	12
	11-387	13
4331804	1-39	7
4331857	16-25	26
4331861	11-91	31
4331925	11-91	30
	12-17	3
4331950	11-51	13
4332448	1-13	25
	1-17	20
	1-23	25
4332602	11-113	2
4332603	11-113	4
4333014	11-61	5
	11-62	1
	11-65	3
4333044	11-61	6
	11-62	10
	11-65	5
4333407	1-95	18
4333513	22-57	10
4334000	19-9	24
4334365	22-57	5
4334370	22-57	6
4334371	22-57	2
4334481	22-57	6
4334712	9-3	
4334851	8-6	33
4335016	9-5	19
4335033	16-125	1
4335147	20-57	12
	20-93	12
4335167	12-17	25
4335234	19-3	14
4335385	20-46	22
	20-50	22
	20-90	22
4335943	20-67	18
4335944	17-44	25
	20-63	13
	20-67	9
4336204	22-45	20
4336428	11-115	3
4336517	15-38	3
4336714	18-65	
	18-66	
4336715	18-65	
	18-66	
4336717	19-32	15
4337017	20-67	10
4337019	20-67	10
4337021	20-67	10
4337025	20-67	10
4337028	17-43	4
	20-63	10
4337030	20-63	10
4337032	17-43	4
	20-63	10
4337034	20-67	10
4337036	17-43	4
	20-63	10
4337040	20-63	10
4337042	17-43	4
4337045	20-63	10
4337046	17-43	4
4337050	17-43	4
4337054	17-43	4
4337059	17-43	4
4337066	17-43	4
4337076	17-43	4
4337117	20-81	10
4337119	20-81	10
4337121	20-81	10
4337125	20-81	10
4337128	20-77	10
4337130	17-49	4
	20-77	10
	20-81	10
4337132	20-77	10
	20-81	10
4337134	17-49	4
4337136	17-49	4
4337137	20-77	10
4337138	17-49	4
4337143	20-77	10
4337145	17-49	4
4337149	17-49	4
	20-77	10
4337153	17-49	4
4337155	20-77	10
4337159	17-49	4
4337169	17-49	4
4337176	17-49	4
4337308	1-119	6
4337309	1-119	6
4337310	1-119	6
4337311	1-119	6
4337312	1-119	6
4337628	7-15	1
	7-19	1
4337831	16-35	6
	16-41	6
	16-54	
4338200	11-185	5
	11-215	9
	11-227	11
	11-247	5
	11-253	11
	11-287	1
4338307	9-11	1
4338439	22-32	3
4338440	22-34	3
4338969	11-353	34
4339772	15-3	1
4339794	15-37	
4339990	7-5	2

See Service Manual for service procedures.
©2026 HYSTER COMPANY

NUMERICAL INDEX (continued)

PART NO.	PAGE	ITEM
4339991	7-5	2
4339995	16-12	
	16-31	
4340253	14-19	8
4340565	2-7	2
4340567	2-7	3
4341462	1-93	11
	1-95	17
4341756	4-3	7
4341764	15-4	6
4341765	15-4	3
4341825	18-9	25
	18-28	25
	20-12	5
	20-30	5
	20-67	5
	20-81	5
4341994	22-23	3
4342153	17-33	9
4343081	11-143	5
4343141	15-29	20
4344217	6-5	23
4345069	9-7	34
	9-11	21
	9-15	26
4345143	12-3	11
4345249	12-3	15
4345250	12-3	15
4345375	19-10	53
	19-14	53
4345628	11-120	4
4346616	16-77	14
4347420	20-57	10
	20-93	10
4347594	8-3	22
4347771	1-53	16
4347773	1-53	5
4347888	1-9	12
	1-17	8
4348267	12-7	3
4348957	19-10	55
	19-14	55
4349034	15-42	3
4349037	15-42	7
4349038	15-42	
4349336	11-155	
4349483	1-13	19
	1-17	14
	1-21	11
	1-23	30
	22-37	7
	22-38	4
4349738	1-103	7
4350103	11-185	5
	11-215	9
	11-227	11
	11-240	28
	11-247	5
	11-253	11
	11-265	9
	11-287	2
4350109	1-81	9
4350366	11-76	23
4351175	7-19	12
4351287	9-5	6
4351710	12-3	6
4351722	11-7	12
	11-9	12
	11-23	17
4351723	11-23	17
	11-33	16
4353570	15-3	1
	15-42	
4354388	15-5	2
	15-9	17
4355043	14-11	5
	14-15	6
4355467	22-79	8
	22-83	8
4355593	11-115	12
4355597	11-115	1
4356095	17-5	36
	17-9	36
	17-17	36
	17-21	36
	17-44	36
	17-50	36
	20-8	28
	20-64	28
4356130	12-17	3
4356524	12-3	11
	12-7	
4357733	6-5	
4357734	6-5	31
4357735	6-5	28
4357736	6-5	1
4357737	6-5	14
4358132	7-19	10
4359210	1-53	19
4359257	22-77	6
	22-79	5
	22-80	6
	22-83	5
4359258	22-77	6
	22-79	5
	22-80	6
	22-83	5
4359259	22-77	5
	22-79	6
	22-80	5
	22-83	6
4359260	22-77	5
	22-79	6
	22-80	5
	22-83	6
4359534	14-11	5
	14-11	5
	14-15	6
	14-15	6
4360048	6-11	13
4360049	6-11	14
4360354	17-9	37
	17-21	43
	17-44	37
	17-50	37
	20-8	27
	20-26	27
	20-64	27
	20-78	27
4360355	17-37	12
	17-55	12
	20-8	19
	20-26	19
	20-45	10
	20-49	10
	20-63	19
	20-77	19
	20-89	10
4360356	20-46	21
	20-50	21
	20-90	21
4360357	17-37	11
	17-55	11
	20-45	7
	20-49	7
	20-89	7
4360416	20-46	19
	20-50	19
	20-89	19
4360417	20-46	18
	20-50	18
	20-89	18
4360479	14-3	1
	14-7	1
4360625	17-9	42
	17-21	42
	17-44	42
	17-50	42
4360803	12-3	5
	16-87	20
	16-91	18
	16-93	18
4361188	11-240	17
4361284	1-127	2
4361754	17-8	2
	17-43	2
4361755	17-8	2
	17-20	2
4361756	17-20	2
	17-49	2
4361757	17-8	2
	17-20	2
	17-43	2
4361758	17-8	2
	17-20	2
4361759	17-8	2
	17-20	2
	17-49	2
4361760	17-8	2
	17-20	2
	17-43	2
	17-49	2
4361761	17-8	2
	17-20	2
4361762	17-8	2
	17-20	2
	17-49	2
4361763	17-8	2
	17-20	2
	17-43	2
4361764	17-20	2
4361765	17-8	2
	17-20	2
	17-49	2
4361766	17-8	2
	17-43	2

NUMERICAL INDEX (continued)

PART NO.	PAGE	ITEM
4361767	17-8	2
	17-20	2
4361768	17-20	2
	17-49	2
4361769	17-8	2
	17-43	2
4361770	17-8	2
4361771	17-20	2
	17-49	2
4361772	17-8	2
	17-20	2
	17-43	2
4361773	17-20	2
4361774	17-8	2
	17-20	2
	17-43	2
	17-49	2
4361775	17-8	2
4361777	17-20	2
4361779	17-8	2
	17-43	2
4361780	17-8	2
4361781	17-20	2
	17-49	2
4361782	17-20	2
4361785	17-8	2
	17-20	2
	17-43	2
	17-49	2
4361913	18-8	3
	18-28	3
4362958	13-13	
4362959	13-13	15
4362960	13-13	16
4362961	13-13	12
4362962	13-13	11
4362963	13-13	13
4362964	13-13	
4362965	13-13	
4362966	13-13	
4363049	15-4	2
4363180	12-10	3
4363183	12-10	3
4363186	12-10	1
4363188	12-10	1
4363244	18-19	10
	18-37	10
	20-17	5
	20-71	5
4363455	16-35	1
	16-41	1
	16-47	
	16-64	1
4363502	15-39	1
4363503	15-39	2
4363504	15-39	3
4363505	15-39	4
4363506	15-39	5
4363507	15-39	6
4363508	15-39	7
4363509	15-39	8
4363510	15-39	9
4363511	15-39	10
4363512	15-39	11
4363513	15-39	12
4363514	15-39	13
4363515	15-39	14
4364651	22-5	4
	22-7	10
4364768	14-3	
4364769	14-7	
4365150	5-7	14
4365151	5-7	8
4365159	5-19	11
4365162	5-21	19
4367140	4-13	1
4367142	4-21	18
4367144	4-11	29
4367254	11-118	5
4367817	4-27	8
4367876	4-27	15
4367877	4-27	16
4367878	4-27	17
4367879	3-37	2
	4-29	2
4367880	3-37	11
	4-29	11
4367883	12-3	6
4367937	4-31	2
4367940	4-35	22
4367942	4-35	5
4367976	4-17	20
4367982	3-11	15
4367983	3-11	16
4367999	3-12	47
4368002	3-27	12
4368003	3-27	13
4368005	3-27	20
4368006	3-27	22
4368007	3-27	24
4368008	3-43	10
4368018	1-45	15
4368082	6-11	3
4368280	5-7	1
4368283	5-9	
4368361	5-17	2
4368808	14-3	38
	14-8	46
4368867	5-19	10
4368994	5-21	7
4369029	5-25	19
4369030	5-25	1
4369073	5-29	12
4369100	11-81	2
4369196	22-83	
4369197	22-83	
4369199	22-83	
4369202	22-79	
4369208	22-79	
4369209	22-79	
4369219	5-29	6
4369221	5-33	6
4369222	5-33	10
4369223	5-33	19
4369255	5-5	6
4369284	19-31	6
4369706	17-5	24
	17-9	24
	17-9	24
	17-17	24
	17-21	24
	17-21	24
	17-44	24
	17-50	24
	18-4	12
	18-4	12
	18-23	12
	18-23	12
	19-9	11
	19-13	11
	20-8	33
	20-8	33
	20-26	33
	20-26	33
	20-64	33
	20-78	33
4369985	7-21	19
	7-23	20
4370661	15-43	2
4370662	15-43	5
4370663	15-44	
4370664	15-43	15
4370665	15-43	16
4370666	15-43	14
4371209	11-89	5
4371210	11-83	10
	11-85	1
	11-87	1
4371579	15-42	
4371655	11-9	31
	11-23	1
	11-33	18
	11-39	18
4371779	11-115	3
4371829	11-17	1
4371830	11-17	1
4371831	11-17	1
4371832	11-29	15
	11-31	30
	11-37	15
	11-43	16
	11-47	16
4371836	11-122	8
4371933	11-115	3
4372493	3-19	5
	3-21	5
4372709	1-53	6
4373180	1-75	8
4373261	22-83	8
4375041	19-31	10
4375044	19-31	10
4375045	19-31	10
4375046	19-31	10
4375047	19-31	10
4375048	19-31	10
4375049	19-31	10
4375050	19-31	10
4375051	19-31	10
4375052	19-31	10
4375053	19-31	10
4375054	19-32	10
4375055	19-32	10
4375768	16-81	9
4376085	1-35	22
	1-37	7
4376316	11-7	2
	11-9	2
	11-13	2
	11-17	2
4376524	1-35	21
	1-37	8
4376525	1-35	21
	1-37	7
4376534	1-99	6
4376735	22-29	1
4376943	15-45	2

See Service Manual for service procedures.
©2026 HYSTER COMPANY

NUMERICAL INDEX (continued)

PART NO.	PAGE	ITEM
4376944	11-347	14
4376952	11-347	19
	15-45	3
4377051	11-347	15
	15-45	1
4377077	9-18	2
4377935	11-53	14
	11-55	20
4377977	1-21	1
	1-23	1
4377978	1-21	1
	1-23	1
4377979	1-21	1
	1-23	1
4378710	6-5	4
4378711	6-5	13
4378712	6-5	16
4378713	6-5	10
4379082	22-89	29
4379083	22-89	20
4379084	22-89	6
4379085	22-89	11
4379086	22-89	19
4379087	22-89	28
4379088	22-89	21
4379089	22-89	10
4379090	22-89	22
4379107	22-89	31
4379108	22-89	2
4379109	22-89	24
4379110	22-89	1
4379111	22-89	23
4379114	22-89	31
4379115	22-89	2
4379116	22-89	24
4379117	22-89	1
4379118	22-89	23
4379197	22-89	8
4379199	22-89	13
4379200	22-89	14
4379203	22-89	34
4379204	22-89	36
4379205	22-90	37
4379206	22-89	26
4379207	22-89	27
4379208	22-89	4
4379209	22-89	5
4379216	22-89	32
4379219	22-89	32
4379332	22-89	33
4379837	11-53	8
	11-55	11
4380231	3-5	1
4380232	3-5	12
4380233	3-5	11
4380234	3-5	11
4380235	3-11	30
4380236	3-11	40
4380237	3-11	41
4380238	3-11	30
4380241	3-21	2
4380242	3-21	7
	3-46	5
4380243	3-21	8
4380244	3-21	20
4380245	3-21	22
4380246	3-21	24
4380247	3-21	30
4380248	3-45	2
	7-7	2
4380249	3-45	7
	7-7	3
4380250	3-45	7
	7-7	5
4380251	3-45	8
	7-7	8
4380252	3-45	9
	7-7	9
4380253	3-45	11
	7-7	11
4380254	3-45	12
	7-7	12
4380255	3-45	13
	7-7	13
4380256	3-45	14
	7-7	6
4380257	3-45	15
	7-7	7
4380258	3-45	3
	7-7	15
4380259	3-46	1
4380260	3-46	2
4380261	3-25	14
4380262	3-25	15
4380263	3-25	16
4380264	3-25	17
4380265	3-25	18
4380266	3-25	20
4380268	3-25	20
4380269	3-25	14
4380270	3-25	15
4380271	3-27	1
4380272	3-29	4
4380273	3-29	2
4380274	3-29	10
4380275	3-29	13
4380276	3-29	15
4380277	3-29	16
4380278	3-27	27
	3-33	2
4380279	3-33	31
4380280	3-33	36
4380281	3-35	9
4380445	11-173	6
	11-173	7
	11-173	8
	11-173	9
	11-173	11
	11-173	12
	11-173	21
	11-174	22
	11-174	19
	11-174	
4380446	11-165	1
	11-165	2
	11-174	18
	11-174	19
	11-174	
4380722	1-17	5
	1-23	6
4381109	16-89	14
4381867	22-89	11
4381908	1-117	6
4383645	11-109	4
	11-110	5
	11-112	12
4383646	11-109	8
	11-110	4
4384130	6-5	14
4386201	11-387	14
4386234	1-47	12
4388167	1-47	13
4388168	1-45	16
4388573	8-14	1
4388574	8-14	2
4388748	15-31	18
4388761	16-29	5
4389244	1-87	1
4389249	1-87	1
4389707	16-89	19
4390260	12-17	3
4390296	1-72	1
	1-75	1
4390297	1-72	2
4390298	1-72	3
	1-75	2
4390299	1-72	5
	1-75	6
4390300	1-72	6
	1-75	7
4390301	1-72	7
	1-75	9
4390302	1-72	10
	1-75	12
4390303	1-72	8
	1-75	10
4390304	1-72	11
	1-75	13
4390305	1-72	12
	1-75	14
4390306	1-72	13
	1-75	15
4390308	1-72	15
	1-75	17
4390309	1-72	
4390792	15-41	2
4390793	15-41	1
4390794	15-41	5
4390795	15-41	4
4390796	15-41	7
4390797	15-41	8
4390798	15-41	3
4390799	15-41	10
4390800	15-41	9
4390801	15-41	6
4390802	15-41	12
4390803	15-41	11
4390804	15-41	13
4390805	15-41	14
4392808	3-41	2
	4-33	8
4393047	1-131	4
4393190	7-15	17

NUMERICAL INDEX (continued)

PART NO.	PAGE	ITEM
	7-17	14
	7-19	21
4396768	11-145	9
4396769	11-145	6
4396770	11-145	3
4396771	11-152	2
4397073	20-81	18
4397079	17-50	25
	20-77	13
	20-81	9
4397086	17-33	9
4397207	11-145	12
4397455	11-145	19
4398148	1-75	3
4398150	1-75	
4398926	22-5	15
	22-7	18
4399473	15-35	14
4399474	15-35	17
4601120	11-106	9
	11-127	13
	11-129	13
	11-131	13
	11-133	13
	11-135	13
	11-137	13
	11-139	13
	11-141	13
4601463	20-35	3
	20-85	3
4602052	11-125	1
4602370	9-5	22
4603492	1-113	24
	1-117	24
4603493	1-113	10
	1-117	10
4603971	11-347	3
4606610	1-119	7
4607518	19-17	14
	19-18	16
4609405	16-32	6
	16-33	6
4610037	22-29	2
	22-59	1
4611138	1-87	13
4611880	22-79	1
	22-83	1
	22-85	
4611882	22-79	1
	22-83	1
	22-85	
4611913	22-77	2
	22-79	2
	22-80	2
	22-83	2
4612320	1-119	15
4612829	11-385	38
	11-388	26
4615139	13-3	19
4615307	19-3	26
4615670	1-77	8
	1-81	8
4615813	1-101	1
4615847	17-12	4
	17-46	4
	20-14	4
	20-69	4
4615848	17-24	4
	17-52	4
	20-32	4
	20-84	4
4618181	1-57	44
	1-61	44
	1-65	44
	1-67	44
	1-69	33
4618303	11-149	5
	11-151	3
4618304	11-149	5
	11-151	3
4618305	11-149	5
	11-151	3
4622855	4-33	6
4623973	17-12	
	17-46	
	20-15	
	20-70	
4623974	17-24	
	17-52	
	20-33	
	20-84	
4625475	17-12	
	17-24	
	17-46	
	17-52	
	20-33	
	20-84	
4625544	17-24	3
	17-24	3
	17-24	3
	17-24	3
	17-24	3
	17-52	3
4627283	10-7	7
	10-11	9
4627358	1-13	8
4628560	14-8	44
4632455	2-17	7
4635566	16-127	7
4635567	16-127	7
4636802	2-3	13
	2-5	3
	2-7	6
4637825	22-28	7
4642999	2-9	11
	2-11	4
4643000	2-9	10
	2-11	3
4643001	2-9	11
	2-11	4
4643002	2-9	10
	2-11	3
4643003	2-13	16
	2-15	3
	2-19	14
4643005	2-13	16
	2-15	3
4643468	1-121	3
4643494	2-13	17
	2-15	4
4644754	22-49	22
4644755	11-59	1
	11-59	8
	11-61	1
	11-61	11
	11-89	11
	11-107	1
4645936	6-5	5
4646841	3-46	3
4647452	11-69	15
4647453	11-69	15
4647454	11-69	15
	11-70	1
4647455	11-69	14
4647456	11-69	14
4647457	11-69	14
	11-70	3
4649561	10-13	16
4650809	11-115	11
	11-121	3
4653425	16-73	3
4653479	16-73	3
4653649	16-73	13
4655880	11-179	13
	11-179	14
	11-185	12
	11-186	13
	11-192	22
	11-192	23
	11-198	22
	11-198	24
	11-204	29
	11-204	30
	11-209	8
	11-211	33
	11-211	35

©2026 HYSTER COMPANY

NUMERICAL INDEX (continued)

PART NO.	PAGE	ITEM
	11-216	23
	11-216	24
	11-222	17
	11-222	19
	11-228	28
	11-228	29
	11-234	17
	11-234	19
	11-236	52
	11-239	2
	11-239	3
	11-242	48
	11-244	71
	11-244	72
	11-247	12
	11-248	13
	11-254	28
	11-254	29
	11-260	17
	11-260	19
	11-262	50
	11-267	23
	11-267	24
	11-271	1
	11-273	28
	11-273	29
	11-281	9
	11-281	10
	11-288	14
	11-288	15
	11-294	21
	11-295	26
	11-299	5
	11-299	7
	11-300	22
	11-321	3
	11-338	3
	11-339	8
	11-340	4
	11-383	17
	11-387	12
	11-387	13
4655881	11-179	10
	11-179	11
	11-179	12
	11-179	14
	11-179	15
	11-192	19
	11-192	20
	11-192	21
	11-192	24
	11-198	22
	11-198	24
	11-204	22
	11-204	27
	11-204	28
	11-205	31
	11-209	8
	11-211	33
	11-211	35
	11-281	8
	11-281	9
	11-281	11
	11-282	12
	11-282	16
	11-288	15
	11-294	21
	11-294	22
	11-295	26
	11-304	15
	11-308	13
	11-312	14
	11-315	13
	11-316	1
	11-321	1
	11-321	3
	11-326	4
	11-329	12
	11-338	1
	11-340	5
	11-351	7
	11-359	2
	11-360	4
	11-360	5
	11-363	1
4656768	11-149	1
4656769	11-149	1
4656770	11-149	2
4656771	11-103	2
4657061	1-121	3
4657062	1-121	3
4657063	1-121	3
4657064	1-121	3
4658086	17-24	3
	17-24	3
	17-24	3
	17-52	3
	18-34	12
	18-34	12
	18-34	12
	18-38	12
4658087	20-32	3
	20-84	3
4658562	20-32	3
4658710	11-125	1
4659282	11-69	12
4659283	11-69	12
4659286	11-69	7
4659287	11-69	7
4659775	6-5	15
	15-19	30
4659786	6-5	2
4660439	11-69	4
4660608	1-103	8
4660611	6-5	7
4660836	11-69	12
4660837	11-69	7
4661453	2-13	17
	2-15	4
	2-19	15

NUMERICAL INDEX (continued)

PART NO.	PAGE	ITEM
4665534	11-149	1
4666878	11-121	2
4666879	11-121	1
4667872	3-5	
	3-7	
	3-9	
	3-11	
	3-17	
	3-21	
	3-23	
	3-25	
	3-27	
	3-29	
	3-33	
	3-35	
	3-37	
	3-39	
	3-43	
	3-45	
	3-46	
4667873	3-5	
	3-7	
	3-9	
	3-11	
	3-15	
	3-19	
	3-23	
	3-25	
	3-27	
	3-29	
	3-31	
	3-35	
	3-37	
	3-39	
	3-43	
4667917	4-5	
	4-7	
	4-8	
	4-11	
	4-13	
	4-14	
	4-17	
	4-19	
	4-21	
	4-23	
	4-24	
	4-29	
	4-31	
	4-35	
4667918	3-5	
	3-7	
	3-9	
	3-11	
	3-15	
	3-19	
	3-23	
	3-25	
	3-27	
	3-29	
	3-31	
	3-35	
	3-37	
	3-39	
	3-43	
4668921	20-49	17
4668922	20-49	16
	20-49	17
4668923	20-49	16
	20-49	17
4668924	20-49	16
	20-49	17
4668925	20-49	16
4668926	20-49	17
4668927	20-49	16
	20-49	17
4668928	20-49	16
4668929	20-49	17
4668930	20-49	16
4668931	20-49	17
4668932	20-49	16
4668934	20-49	17
4668935	20-49	16
4668937	20-49	17
4668938	20-49	16
4668941	20-50	17
4668942	20-49	16
4668975	17-16	
	17-20	
4668976	17-16	
	17-20	
4668977	17-16	
	17-20	
4668978	17-16	
	17-20	
4668979	17-16	
	17-20	
4668980	17-16	
	17-20	
4668981	17-16	
	17-20	
4668982	17-16	
	17-20	
4668985	17-16	
	17-20	
4668986	17-16	
	17-20	
4668987	17-16	
	17-20	
4668989	17-16	
	17-20	
4668990	17-16	
	17-20	
4668993	17-16	
	17-20	
4668994	17-16	
	17-20	
4668997	17-20	
4668998	17-16	
	17-20	
4669001	17-16	
	17-20	
4669005	17-16	
	17-20	
4669006	17-16	
	17-20	
4669011	17-16	
	17-20	
4669024	17-4	
	17-8	
4669025	17-4	
	17-8	
4669027	17-4	
	17-8	
4669028	17-4	
	17-8	
4669029	17-4	
	17-8	
4669030	17-4	
	17-8	
4669031	17-4	
	17-8	
4669032	17-4	
	17-8	
4669035	17-4	
	17-8	
4669037	17-4	
	17-8	
4669038	17-4	
	17-8	
4669039	17-4	
	17-8	
4669041	17-4	
	17-8	
4669042	17-4	
	17-8	
4669044	17-4	
	17-8	
4669045	22-69	2
	22-73	2
4669046	22-69	1
	22-73	1
4669048	17-4	
	17-8	
4669049	17-4	
	17-8	
4669053	17-4	
	17-8	
4669054	17-4	
	17-8	
4669061	17-4	
	17-8	
4671402	8-5	25
4671786	16-73	
4671787	16-73	
4671891	5-5	1
	5-7	
	5-9	
	5-11	
	5-15	
	5-17	
	5-19	
	5-21	
	5-23	
	5-25	
	5-27	
	5-29	
	5-30	
	5-33	
4671892	5-5	1
	5-7	
	5-9	
	5-11	
	5-15	
	5-17	
	5-19	
	5-21	
	5-23	
	5-25	
	5-27	
	5-29	
	5-30	
	5-33	
4671902	4-5	
	4-7	
	4-8	

See Service Manual for service procedures.
©2026 HYSTER COMPANY

NUMERICAL INDEX (continued)

PART NO.	PAGE	ITEM
	4-11	
	4-13	
	4-14	
	4-17	
	4-19	
	4-21	
	4-23	
	4-24	
	4-29	
	4-31	
	4-35	
4671903	4-5	
	4-7	
	4-8	
	4-11	
	4-13	
	4-14	
	4-17	
	4-19	
	4-21	
	4-23	
	4-27	
	4-29	
	4-31	
	4-35	
4671931	16-73	
4671935	16-73	1
4671951	16-73	1
4671959	4-5	
	4-7	
	4-8	
	4-11	
	4-13	
	4-14	
	4-17	
	4-19	
	4-21	
	4-23	
	4-27	
	4-29	
	4-31	
	4-35	
4672821	2-9	8
	2-11	
4672822	2-9	8
	2-11	
4672851	2-3	12
	2-5	
4672852	2-3	12
	2-5	
4672853	2-13	14
	2-15	
4672854	2-13	14
	2-15	
4672902	19-3	13
	19-21	
4673028	18-11	2
	18-11	2
4673029	18-30	2
4673030	18-11	2
	18-30	2
4673031	18-11	2
	18-30	2
4673032	18-11	2
	18-30	2
4673033	18-11	2
	18-30	2
4673034	18-11	2
	18-30	2
4673035	18-11	2
	18-30	2
4673036	18-11	2
	18-30	2
4673037	18-11	2
4673038	18-30	2
4673039	18-30	2
4673042	18-11	2
4673043	18-30	2
4673046	18-11	2
4673047	18-30	2
4673051	18-11	2
	18-30	2
4673064	18-4	20
	18-11	
4673065	18-4	20
	18-11	
4673067	18-4	20
	18-11	
4673068	18-4	20
	18-11	
4673069	18-4	20
	18-11	
4673070	18-4	20
	18-11	
4673071	18-4	20
	18-11	
4673072	18-4	20
	18-11	
4673073	18-4	20
	18-11	
4673074	18-4	20
	18-11	
4673079	18-4	20
	18-11	
4673083	18-4	20
	18-11	
4673088	18-4	20
	18-11	
4673106	18-30	
4673107	18-30	
4673108	18-30	
4673109	18-30	
4673110	18-30	
4673111	18-30	
4673112	18-30	
4673113	18-30	
4673115	18-30	
4673116	18-30	
4673120	18-30	
4673124	18-30	
4673128	18-30	
4673171	18-11	1
	18-11	1
	18-16	1
	18-19	1
4673172	18-30	1
	18-34	1
	18-37	1
4673173	18-11	1
	18-16	1
	18-19	1
	18-30	1
	18-34	1
	18-37	1
4673174	18-11	1
	18-16	1
	18-19	1
	18-30	1
	18-34	1
	18-37	1
4673175	18-11	1
	18-16	1
	18-19	1
	18-30	1
	18-34	1
	18-37	1
4673176	18-11	1
	18-16	1
	18-19	1
	18-30	1
	18-34	1
	18-37	1
4673177	18-11	1
	18-16	1
	18-19	1
	18-30	1
	18-34	1
	18-37	1
4673178	18-11	1
	18-16	1
	18-19	1
	18-30	1
	18-34	1
	18-37	1
4673179	18-11	1
	18-16	1
	18-19	1
	18-30	1
	18-34	1
	18-37	1
4673180	18-11	1
	18-16	1
	18-19	1
4673181	18-30	1
	18-34	1
	18-37	1
4673182	18-30	1
	18-34	1
	18-37	1
4673185	18-11	1
	18-16	1
	18-19	1
4673186	18-30	1
	18-34	1
	18-37	1
4673189	18-11	1
	18-16	1
	18-19	1
4673190	18-30	1
	18-34	1
	18-37	1
4673194	18-11	1
	18-16	1
	18-19	1
	18-30	1
	18-34	1
	18-37	1
4673203	2-9	13
4673204	2-13	18
	2-17	14
4673206	2-9	6
4673210	2-13	6
4673212	2-3	20
4673213	2-3	3
	2-9	3
	2-13	3
	2-19	3
4673229	2-3	6

NUMERICAL INDEX (continued)

PART NO.	PAGE	ITEM
4673301	18-16	2
4673302	18-34	2
4673303	18-16	2
	18-34	2
4673304	18-16	2
	18-34	2
4673305	18-16	2
	18-34	2
4673306	18-16	2
	18-34	2
4673307	18-16	2
	18-34	2
4673308	18-16	2
	18-34	2
4673309	18-16	2
	18-34	2
4673310	18-16	2
4673311	18-34	2
4673312	18-34	2
4673315	18-16	2
4673316	18-34	2
4673319	18-16	2
4673320	18-34	2
4673324	18-16	2
	18-34	2
4673370	18-16	
4673372	18-16	
4673373	18-16	
4673374	18-16	
4673375	18-16	
4673376	18-16	
4673377	18-16	
4673378	18-16	
4673379	18-16	
4673384	18-16	
4673388	18-16	
4673393	18-16	
4673431	18-34	
4673432	18-34	
4673433	18-34	
4673434	18-34	
4673435	18-34	
4673436	18-34	
4673437	18-34	
4673438	18-34	
4673440	18-34	
4673441	18-34	
4673445	18-34	
4673449	18-34	
4673453	18-34	
4673585	18-11	11
	18-11	11
	18-11	11
4673586	18-30	11
	18-30	11
	18-30	11
	18-30	11
	18-30	11
	18-30	11
	18-30	11
	18-30	11
4673590	18-16	12
	18-19	12
4673591	18-11	11
4673592	18-30	11
	18-30	11
	18-30	11
4673596	18-30	11
	18-30	11
4673754	7-15	9
	7-17	8
	7-19	8
4674013	11-	11
	127	
	11-	11
	129	
	11-	11
	131	
	11-	11
	133	
	11-	11
	135	
	11-	11
	137	
	11-	11
	139	
	11-	11
	141	
4674245	2-13	20
	2-17	16
	2-19	18
4674394	8-5	25
4674457	12-5	13
	12-9	
4674458	12-5	14
	12-9	
4674545	7-15	10
4674953	16-11	7
	16-15	7
	16-19	11
	16-22	16
	16-25	11
	16-29	34
4675701	20-8	20
	20-8	20
	20-63	20
4675707	20-8	20
	20-63	20
4675708	20-8	20
4675709	20-8	20
	20-63	20
4675711	20-8	20
4675712	20-8	20
	20-63	20
4675714	20-8	20
4675716	20-8	20
4675719	20-8	20
	20-63	20
4675722	20-8	20
	20-63	20
4675726	20-8	20
4675766	20-26	20
	20-77	20
4675771	20-26	20
	20-77	20
4675772	20-26	20
4675773	20-26	20
	20-77	20
4675775	20-26	20
4675776	20-26	20
	20-77	20
4675777	20-26	20
4675778	20-26	20
4675780	20-26	20
4675781	20-26	20
	20-77	20
4675783	20-26	20
4675786	20-26	20
	20-77	20
4675790	20-26	20
	20-78	20
4675793	20-26	20
4675861	8-3	1
4676339	1-30	3
	1-31	
4676340	1-30	3
4676344	1-27	9
	1-28	
	1-30	
4676345	1-33	1
	1-35	1
	1-37	17
	1-38	
4676346	1-48	
	1-50	
4676348	1-42	1
	1-45	
	1-47	
4676351	1-57	2
	1-61	2
	1-65	1
	1-67	1
	1-69	1
	1-91	
4676393	19-21	
4676398	2-3	17
4676447	7-3	9
	7-7	
	7-11	9
4676480	3-3	14
	4-3	14
	5-3	16
	12-17	2
4676481	12-10	4
	12-10	5
4676576	8-5	15
4676577	8-5	10
4676793	2-3	15
4676869	20-39	
4677377	8-5	10
4677378	8-5	15
4677486	20-43	
4678111	8-9	2
4678185	20-89	13
4678900	9-5	2
4679007	9-5	4
4679031	12-17	1
4679065	9-5	3
4679422	1-99	10
	11-	4
	125	
4680475	8-5	9
4680476	8-5	1
4680481	8-5	8
4680489	3-7	18
	4-7	3
4680750	8-5	17
4680798	20-8	17
	20-14	
	20-69	
4680801	20-8	17
	20-14	
	20-69	
4680802	17-4	3
	17-8	3
	17-12	
	17-45	
4680803	17-4	3

See Service Manual for service procedures.
©2026 HYSTER COMPANY

NUMERICAL INDEX (continued)

PART NO.	PAGE	ITEM
	17-8	3
	17-12	
	20-8	17
	20-14	
	20-69	
4680804	20-8	17
	20-14	
4680805	17-4	3
	17-8	3
	17-12	
	17-45	
	20-8	17
	20-14	
	20-69	
4680806	17-4	3
	17-8	3
	17-12	
4680807	17-4	3
	17-8	3
	17-12	
4680808	17-4	3
	17-8	3
	17-12	
	17-45	
4680809	17-4	3
	17-8	3
	17-12	
4680810	18-8	20
	18-8	20
	18-41	
	20-12	14
	20-12	14
	20-17	
	20-71	
4680811	20-12	14
	20-17	
	20-71	
4680812	18-8	20
	18-41	
	20-12	14
	20-17	
4680813	18-8	20
	18-41	
	20-12	14
	20-17	
	20-71	
4680814	18-8	20
	18-41	
4680815	18-8	20
	18-41	
	20-12	14
	20-17	
4680816	17-4	3
	17-8	3
	17-12	
4680817	18-8	20
	18-41	
	20-12	14
	20-17	
	20-71	
4680818	17-4	3
	17-8	3
	17-12	
	17-45	
4680819	18-8	20
	18-41	
4680820	18-8	20
	18-41	
	20-12	14
	20-17	
4680822	20-12	14
	20-17	
4680823	17-4	3
	17-8	3
	17-12	
4680824	18-8	20
	18-41	
4680826	17-4	3
	17-8	3
	17-12	
4680827	20-12	14
	20-17	
	20-71	
4680828	17-4	3
	17-8	3
	17-12	
4680832	17-4	3
	17-8	3
	17-12	
	17-45	
	17-45	
4680833	17-4	3
	17-8	3
	17-12	
4680835	18-8	20
	18-41	
	20-12	14
	20-17	
	20-71	
4680836	20-8	17
	20-14	
4680839	20-8	17
	20-14	
	20-69	
4680841	18-8	20
	18-41	
	20-12	14
	20-17	
4680843	20-8	17
	20-14	
4680845	20-8	17
	20-14	
4680852	20-8	17
	20-14	
	20-69	
4680854	18-8	20
	18-41	
4680858	20-8	17
	20-14	
	20-69	
4680864	20-8	17
	20-14	
4680879	20-30	14
	20-35	
	20-85	
4680880	18-41	
4680883	20-30	14
	20-35	
	20-85	
4680886	18-41	
	20-30	14
	20-35	
4680890	18-41	
4680894	17-25	
4680895	17-25	
4680896	17-25	
4680902	18-49	
4680903	18-49	
4680904	18-49	
4680997	17-16	3
	17-20	3
	17-24	
4680998	17-16	3
	17-20	3
	17-24	
	17-51	
4680999	17-16	3
	17-20	3
	17-24	
4681000	17-16	3
	17-20	3
	17-24	
4681001	17-16	3
	17-20	3
	17-24	
	17-51	
4681002	17-16	3
	17-20	3
	17-24	
	17-51	
4681003	17-16	3
	17-20	3
	17-24	
4681004	17-16	3
	17-20	3
	17-24	
	17-51	
4681005	17-16	3
	17-20	3
	17-24	
4681006	17-16	3
	17-20	3
	17-24	
4681007	17-16	3
	17-20	3
	17-24	
	17-51	
4681011	20-26	17
	20-32	
	20-83	
4681013	20-26	17
	20-32	
	20-83	
4681014	20-26	17
	20-32	
4681015	20-26	17
	20-32	
	20-83	
4681016	20-26	17
	20-32	
4681017	20-26	17
	20-32	
	20-83	
4681018	20-26	17
	20-32	
4681019	20-26	17
	20-32	
4681020	20-26	17
	20-32	
4681021	20-26	17
	20-32	
	20-83	
4681023	20-26	17
	20-32	
4681025	20-26	17
	20-32	
	20-83	
4681028	20-26	17

NUMERICAL INDEX (continued)

PART NO.	PAGE	ITEM
	20-32	
4681037	17-16	3
	17-20	3
	17-24	
4681038	17-16	3
	17-20	3
	17-24	
	17-51	
4681041	17-16	3
	17-20	3
	17-24	
	17-51	
4681042	17-16	3
	17-20	3
	17-24	
4681043	17-20	3
	17-24	
4681044	17-16	3
	17-20	3
	17-24	
	17-51	
4681047	17-16	3
	17-20	3
	17-24	
4681051	17-16	3
	17-20	3
	17-24	
	17-51	
4681052	17-16	3
	17-20	3
	17-24	
4681055	17-16	3
	17-20	3
	17-24	
	17-51	
4681056	20-26	17
	20-32	
	20-83	
4681065	17-4	3
	17-8	3
	17-12	
	17-45	
4681067	17-4	3
	17-8	3
	17-12	
	17-45	
4681068	17-4	3
	17-8	3
	17-12	
4681072	17-4	3
	17-8	3
	17-12	
	17-45	
4681073	17-4	3
	17-8	3
	17-12	
4681078	17-4	3
	17-8	3
	17-12	
	17-45	
4681150	17-12	3
	17-46	3
4681151	17-12	3
	17-12	3
	17-12	3
	17-12	3
	17-46	3
4681252	12-17	14
4681457	18-42	
	20-18	
	20-72	
4681458	18-42	
	20-36	
	20-86	
4681655	2-9	8
	2-11	
4681656	2-13	14
	2-15	
	2-17	13
4681657	2-3	12
	2-5	
4681740	11-69	2
4681835	12-13	6
4681837	11-127	1
4681838	11-129	1
4681839	11-127	1
4681840	11-129	1
4681841	11-131	1
4681842	11-133	1
4681843	11-131	1
4681844	11-133	1
4681845	11-127	1
4681846	11-129	1
4681847	11-127	1
4681848	11-129	1
4681849	11-131	1
4681850	11-133	1
4681851	11-131	1
4681852	11-133	1
4681861	11-135	1
4681862	11-135	1
4681863	11-139	1
4681864	11-139	1
4681867	11-137	1
4681868	11-137	1
4681869	11-141	1
4681870	11-141	1
4681873	11-135	1
4681874	11-135	1
4681875	11-139	1
4681876	11-139	1
4681879	11-137	1
4681880	11-137	1
4681881	11-141	1
4681882	11-141	1
4681885	11-127	7
	11-129	7
	11-131	8
	11-133	7
	11-135	7
	11-137	7
	11-139	7
	11-141	7
4681886	11-127	12
	11-129	12
	11-131	12
	11-133	12
	11-135	12
	11-137	12
	11-139	12
	11-141	12
4681887	11-127	17
	11-129	17
	11-131	17
	11-133	17
	11-135	17
	11-137	17
	11-139	17
	11-141	17
4681888	11-127	2
	11-127	3
	11-127	4
	11-129	2
	11-129	3
	11-129	4

©2026 HYSTER COMPANY

NUMERICAL INDEX (continued)

PART NO.	PAGE	ITEM
	11-129	5
	11-131	2
	11-131	3
	11-131	4
	11-133	2
	11-133	3
	11-133	4
	11-133	5
	11-135	2
	11-135	3
	11-135	4
	11-137	2
	11-137	3
	11-137	4
	11-139	2
	11-139	3
	11-139	4
	11-139	5
	11-141	2
	11-141	3
	11-141	4
	11-141	5
4681889	11-127	6
	11-129	6
4681890	11-127	6
	11-129	6
	11-131	6
	11-133	6
	11-135	6
	11-137	6
	11-139	6
	11-141	6
4681924	8-5	12
4681931	20-30	14
	20-35	
	20-85	
4681932	18-41	
	20-30	14
	20-35	
	20-85	
4681933	18-41	
	20-30	14
	20-35	
4681934	18-41	
	20-30	14
	20-35	
	20-85	
4681935	18-41	
4681936	18-41	
	20-30	14
	20-35	
4681937	18-41	
	20-30	14
	20-35	
	20-85	
4681938	18-41	
	20-30	14
	20-35	
4681939	18-41	
	20-30	14
	20-35	
4681940	20-30	14
	20-35	
4681941	20-30	14
	20-35	
	20-85	
4681942	18-41	
4681943	18-41	
	20-30	14
	20-35	
4682020	2-13	19
	2-17	15
	2-19	17
4682022	7-15	3
4682026	16-81	1
	16-85	1
4682178	8-5	14
4682363	20-45	5
	20-49	5
	20-89	5
4682430	11-66	2
4682485	8-5	15
4682555	16-11	22
	16-19	26
4682673	16-11	26
	16-19	30
4682686	11-73	1
	11-75	1
	11-323	
4682701	16-19	16
	16-22	7
4682705	11-73	1
	11-75	1
	11-323	
4682718	16-11	6
4682719	16-19	15
4682720	16-15	27
	16-22	28
	16-25	40
4682844	16-81	16
	16-85	16
4682845	16-81	17
	16-85	17
4682846	16-81	14
	16-85	14
4682890	8-9	10
4682891	8-9	7
4682908	16-69	8
	16-71	8
4682915	16-75	8
	16-77	12
4682916	16-75	9
	16-77	13
4682919	16-77	16
4682920	16-77	17
4682921	16-77	6
4682922	16-77	5
4682923	16-75	1
4682924	16-75	2
4682925	16-75	3
4682926	16-75	4
4683102	16-11	20
4683103	16-15	22
	16-22	22
	16-25	37
4683160	16-11	35
	16-15	33
	16-19	36
	16-22	35
4683662	8-5	1
4683663	8-5	9
4683827	19-29	2
	19-31	2
4683940	16-22	14
4683941	16-11	6
	16-15	4
4683959	16-35	
4683960	16-35	
4683961	16-35	
4683962	16-35	
4683963	16-35	
4683964	16-41	
4683965	16-41	
4683966	16-41	
4683967	16-41	
4683968	16-41	
4683973	16-35	
4683974	16-35	
4683975	16-35	
4683976	16-35	
4683977	16-41	
4683978	16-41	
4683979	16-41	
4683980	16-41	
4683986	16-56	
4683987	16-64	
4683988	16-64	
4683990	16-56	
4683991	16-64	
4683992	16-64	
4684006	19-29	23
4684042	11-155	
4684250	17-37	1
	17-55	1
4684251	17-37	1
4684252	17-37	1
4684253	17-37	1
	17-55	1
4684254	17-37	1
4684255	17-37	1
4684256	17-37	1
	17-55	1

NUMERICAL INDEX (continued)

PART NO.	PAGE	ITEM
4684257	17-37	1
4684258	17-37	1
4684259	17-37	1
	17-55	1
4684261	17-37	1
4684262	17-37	1
	17-55	1
4684263	17-37	1
4684264	17-37	1
4684265	17-37	1
	17-55	1
4684267	17-37	1
	17-55	1
4684268	17-37	1
	17-55	1
4684269	17-37	1
4684270	17-37	1
	17-55	1
4684275	17-37	1
	17-55	1
4684277	17-37	1
4684281	17-37	1
	17-55	1
4684320	10-7	8
	10-11	11
4684630	1-103	1
	1-109	
4684709	22-23	6
4684711	17-31	12
	17-33	5
	17-33	6
4684780	18-45	13
	20-39	15
4684781	18-45	14
	20-39	14
4684880	1-103	1
	1-109	
4684881	1-103	1
	1-109	
4684884	1-103	1
	1-107	
4684885	1-103	1
	1-107	
4684886	1-105	
4684889	1-101	
4684890	1-101	
4684916	9-3	14
	11-324	
4684954	8-9	6
4685021	22-27	1
4685196	20-51	4
4685197	20-51	3
4685198	20-51	6
4685199	20-51	5
4685212	20-45	14
	20-49	14
	20-89	14
4685213	20-45	14
	20-49	14
	20-89	14
4685214	20-45	14
	20-49	14
4685215	20-45	14
	20-49	14
	20-89	14
4685216	20-45	14
	20-49	14
4685217	20-45	14
	20-49	14
	20-89	14
4685218	20-45	14
4685219	20-45	14
	20-49	14
4685220	20-45	14
	20-49	14
4685221	20-45	14
4685223	20-45	14
	20-49	14
	20-89	14
4685225	20-45	14
	20-49	14
	20-89	14
4685228	20-45	14
	20-49	14
	20-89	14
4685231	20-46	17
4685240	20-46	23
	20-50	23
	20-90	23
4685241	20-46	23
	20-50	23
	20-90	23
4685242	20-46	23
	20-50	23
4685243	20-46	23
	20-50	23
	20-90	23
4685244	20-46	23
	20-50	23
4685245	20-46	23
	20-50	23
	20-90	23
4685246	20-46	23
4685247	20-46	23
	20-50	23
4685248	20-46	23
	20-50	23
4685249	20-46	23
4685251	20-46	23
	20-50	23
	20-90	23
4685253	20-46	23
	20-50	23
	20-90	23
4685256	20-46	23
	20-50	23
	20-90	23
4685259	20-46	23
4685268	20-46	24
	20-50	24
	20-90	24
4685269	20-46	24
	20-50	24
	20-90	24
4685270	20-46	24
	20-50	24
4685271	20-46	24
	20-50	24
	20-90	24
4685272	20-46	24
	20-50	24
4685273	20-46	24
	20-50	24
	20-90	24
4685274	20-46	24
4685275	20-46	24
	20-50	24
4685276	20-46	24
	20-50	24
4685277	20-46	24
4685279	20-46	24
	20-50	24
	20-90	24
4685281	20-46	24
	20-50	24
	20-90	24
4685285	20-47	24
	20-50	24
	20-90	24
4685288	20-47	24
4685534	20-45	17
	20-89	17
4685535	20-45	16
	20-45	17
	20-89	16
	20-89	17
4685536	20-45	16
	20-45	17
	20-89	16
4685537	20-45	16
	20-45	17
	20-89	17
4685538	20-45	16
	20-89	16
4685539	20-46	17
4685540	20-45	16
	20-46	17
	20-89	17
4685541	20-45	16
	20-46	17
	20-89	16
4685542	20-45	16
	20-46	17
4685543	20-45	16
4685544	20-46	17
4685545	20-45	16
	20-46	17
4685546	20-45	16
4685547	20-46	17
	20-89	17
4685548	20-45	16
	20-89	16
4685550	20-46	17
	20-89	17
4685551	20-45	16
	20-89	16
4685554	20-46	17
	20-89	17
4685555	20-45	16
	20-89	16
4685557	20-45	14
4685558	20-45	16
4685563	20-53	4
4685564	20-53	3
4685565	20-53	6
4685566	20-53	5
4685986	8-9	11
4686059	13-8	4
	13-9	3
4686060	13-8	3
	13-9	2
4686294	15-17	4
4686312	14-8	48
4686315	6-6	35
	11-319	
4686320	15-21	9

©2026 HYSTER COMPANY

NUMERICAL INDEX (continued)

PART NO.	PAGE	ITEM
	15-23	14
4686321	15-21	16
	15-23	13
4686386	11-121	1
4686387	11-121	2
4686428	16-25	12
	16-29	33
4686524	18-3	
	18-8	
4686525	18-3	
	18-8	
4686527	18-3	
	18-8	
4686528	18-3	
	18-8	
4686529	18-3	
	18-8	
4686530	18-3	
	18-8	
4686531	18-3	
	18-8	
4686532	18-3	
	18-8	
4686533	18-3	
	18-8	
4686534	18-3	
	18-8	
4686539	18-3	
	18-8	
4686543	18-3	
	18-8	
4686548	18-3	
	18-8	
4686557	18-23	
	18-27	
4686558	18-23	
	18-27	
4686559	18-23	
	18-27	
4686560	18-23	
	18-27	
4686561	18-23	
	18-27	
4686562	18-23	
	18-27	
4686563	18-23	
	18-27	
4686564	18-23	
	18-27	
4686567	18-23	
	18-27	
4686569	18-23	
	18-27	
4686573	18-23	
	18-27	
4686577	18-23	
	18-27	
4686581	18-23	
	18-27	
4686601	1-87	7
4686632	16-25	12
4686901	15-21	17
	15-23	17
4687153	17-29	16
	17-31	16
	18-45	16
	19-25	11
	20-39	11
4687160	13-3	1
	13-7	
4687164	13-3	1
	13-7	
4687257	7-15	11
4687550	8-6	25
4687568	1-9	29
	1-14	47
	1-18	42
4687569	1-9	28
	1-14	48
	1-18	43
4687570	1-21	7
	1-23	7
4687571	1-9	26
	1-14	49
	1-18	44
4687572	1-9	27
	1-14	46
	1-18	41
4687801	22-80	4
	22-83	3
4687802	22-80	3
	22-83	4
4687886	22-77	4
	22-79	3
4687887	22-77	3
	22-79	4
4687990	20-39	
4687991	20-39	
4687992	20-39	
4688184	18-52	11
	18-60	11
4688185	18-52	11
	18-60	11
4688186	18-52	11
	18-60	11
4688187	18-52	11
	18-60	11
4688188	18-52	11
	18-60	11
4688189	18-52	11
	18-60	11
4688190	18-52	11
	18-60	11
4688191	18-52	11
	18-60	11
4688192	18-52	11
	18-60	11
4688195	18-52	11
	18-60	11
4688196	18-52	11
	18-60	11
4688200	18-53	11
	18-60	11
4688201	18-53	11
	18-60	11
4688204	18-53	11
	18-60	11
4688207	18-53	11
	18-60	11
4688211	18-53	11
	18-60	11
4688217	18-52	9
	18-60	9
4688218	18-52	9
	18-60	9
4688219	18-52	9
	18-60	9
4688220	18-52	9
	18-60	9
4688221	18-52	9
	18-60	9
4688222	18-52	9
	18-60	9
4688223	18-52	9
	18-60	9
4688224	18-52	9
	18-60	9
4688225	18-52	9
	18-60	9
4688228	18-52	9
	18-60	9
4688229	18-52	9
	18-60	9
4688233	18-52	9
	18-60	9
4688234	18-52	9
	18-60	9
4688237	18-52	9
	18-60	9
4688240	18-52	9
	18-60	9
4688244	18-52	9
	18-60	9
4688301	18-56	11
	18-64	11
4688303	18-56	11
	18-64	11
4688304	18-56	11
	18-64	11
4688305	18-56	11
	18-64	11
4688306	18-56	11
	18-64	11
4688307	18-56	11
	18-64	11
4688308	18-56	11
	18-64	11
4688309	18-56	11
	18-64	11
4688312	18-56	11
	18-64	11
4688317	18-56	11
	18-64	11
4688321	18-56	11
	18-64	11
4688328	18-56	11
	18-64	11
4688329	18-55	9
	18-63	9
4688331	18-55	9
	18-63	9
4688332	18-56	9
	18-63	9
4688333	18-56	9
	18-63	9
4688334	18-56	9
	18-63	9
4688335	18-56	9
	18-63	9
4688336	18-56	9
	18-63	9
4688337	18-56	9
	18-63	9
4688340	18-56	9
	18-64	9
4688345	18-56	9

NUMERICAL INDEX (continued)

PART NO.	PAGE	ITEM
	18-64	9
4688349	18-56	9
	18-64	9
4688356	18-56	9
	18-64	9
4688479	18-65	7
4688480	18-65	8
	18-66	8
4688481	18-65	5
4688482	18-65	6
	18-66	6
4688724	1-33	28
	1-35	28
	1-37	2
4688725	1-33	29
	1-35	29
	1-37	1
4688729	1-30	4
	1-33	27
	1-35	27
	1-37	13
	1-39	5
4688730	1-39	4
4688731	1-39	2
4688732	1-30	2
4688735	1-30	7
4688738	1-30	1
4688886	1-30	6
4689670	20-43	
4689671	20-43	
4689672	20-43	
4689679	17-25	
4689691	18-49	
4689824	19-3	10
4689930	19-10	35
	19-14	35
	19-17	
4689931	19-10	35
	19-14	35
	19-17	
4689932	19-10	35
	19-14	35
	19-17	
4689933	19-10	35
	19-14	35
	19-17	
4689948	19-10	35
	19-14	35
	19-17	
4689957	19-17	7
	19-18	9
4689984	1-96	5
4690041	1-89	1
4690127	19-9	29
	19-13	29
4690129	11-105	
4690130	11-105	
4690131	11-105	
4690132	11-105	
4690133	11-105	
4690134	11-105	
4690135	11-105	
4690136	11-105	
4690137	11-105	
4690138	11-105	
4690139	11-105	
4690140	11-105	
4690141	11-105	
4690142	11-105	
4690144	11-105	
4690153	11-105	
4690154	11-105	
4690155	11-105	
4690156	11-105	
4690159	11-105	
4690160	11-105	
4690161	11-105	
4690162	11-105	
4690165	11-105	
4690166	11-105	
4690167	11-105	
4690168	11-105	
4690171	11-105	
4690172	11-105	
4690173	11-105	
4690174	11-105	
4690228	11-105	
4690304	1-89	5
4690419	19-3	13
	19-21	
4690420	19-3	13
	19-21	
4690421	19-3	13
	19-21	
4690422	19-3	13
	19-21	
4690527	11-79	6
	11-335	
4690545	11-377	
4690614	8-3	2
4690615	11-379	
	17-39	13
	17-39	13
4690617	11-379	
4690618	11-379	
	17-39	13
	17-39	13
4690619	11-379	
	17-39	13
	17-39	13
4690620	11-379	
	17-39	13
	17-39	13
4690621	11-379	
	17-39	13
	17-39	13
4690622	11-379	
	17-39	13
	17-39	13
4690623	11-379	
	17-39	13
	17-39	13
4690624	11-379	
	17-39	13
	17-39	13
4690625	11-379	
	17-39	13
	17-39	13
4690627	11-379	
	17-39	13
	17-39	13
4690628	11-379	
	17-39	13
	17-39	13
4690629	11-379	
	17-39	13
	17-39	13
4690630	11-379	
	17-39	13
	17-39	13
4690631	11-379	
	17-39	13
	17-39	13
4690633	11-379	
	17-39	13
	17-39	13
4690634	11-379	
	17-39	13
	17-39	13
4690636	11-379	
	17-40	13
	17-40	13
4690641	11-380	
	17-40	13

See Service Manual for service procedures.

©2026 HYSTER COMPANY

NUMERICAL INDEX (continued)

PART NO.	PAGE	ITEM
	17-40	13
4690643	11-380	
	17-40	13
	17-40	13
4690647	11-380	
	17-40	13
	17-40	13
4690726	20-43	
4690735	19-17	14
	19-18	16
4690744	19-17	14
	19-18	16
4690828	22-77	2
	22-79	2
4690837	14-3	2
	14-7	2
	14-9	
4690838	14-3	2
	14-7	2
	14-9	
4690850	19-17	2
4690851	19-17	2
4690852	19-17	2
	19-17	2
4690853	19-17	2
4690934	19-17	1
	19-18	1
4690935	19-17	1
	19-18	1
4690938	19-17	1
	19-17	1
	19-18	1
	19-18	1
4690939	19-17	1
	19-18	1
4690968	19-18	5
4690969	19-18	5
4690970	19-18	5
	19-18	5
4690971	19-18	5
4690984	19-10	36
	19-14	36
	19-18	
4690985	19-10	36
	19-14	36
	19-18	
4690986	19-10	36
	19-14	36
	19-18	
4690987	19-10	36
	19-14	36
	19-18	
4691001	19-10	36
	19-14	36
	19-18	
4691047	20-3	
	20-7	
	20-11	
4691050	20-3	
	20-7	
	20-11	
4691052	20-3	
	20-7	
	20-11	
4691053	20-3	
	20-7	
	20-11	
4691054	20-3	
	20-7	
	20-11	
4691055	20-3	
	20-7	
	20-11	
4691056	20-3	
	20-7	
	20-11	
4691058	20-3	
	20-7	
	20-11	
4691059	20-3	
	20-7	
	20-11	
4691062	20-3	
	20-7	
	20-11	
4691064	20-3	
	20-7	
	20-11	
4691067	20-3	
	20-7	
4691083	20-21	
	20-25	
	20-29	
4691085	20-21	
	20-25	
	20-29	
4691086	20-21	
	20-25	
	20-29	
4691087	20-21	
	20-25	
	20-29	
4691088	20-21	
	20-25	
	20-29	
4691089	20-21	
	20-25	
	20-29	
4691090	20-21	
	20-25	
	20-29	
4691091	20-21	
	20-25	
	20-29	
4691092	20-21	
	20-25	
	20-29	
4691093	20-21	
	20-25	
	20-29	
4691095	20-21	
	20-25	
	20-29	
4691097	20-21	
	20-25	
	20-29	
4691100	20-21	
	20-25	
	20-29	
4691103	20-21	
	20-25	
	20-29	
4691188	16-69	11
	16-71	11
4691189	16-69	12
	16-71	12
4691190	16-69	13
	16-71	13
4691191	16-69	14
	16-71	14
4691256	19-29	1
4691257	19-29	1
4691259	19-29	1
4691260	19-29	1
4691291	1-57	8
	1-61	8
	1-65	10
	1-67	10
	1-69	13
4691293	1-57	7
	1-61	7
	1-65	11
	1-67	11
	1-69	12
4691369	9-3	21
4691709	11-115	6
4691710	11-117	4
4691724	14-15	19
4691737	14-11	17
4691738	14-11	17
4691739	14-15	18
4691740	14-15	19
	14-16	22
4691741	14-11	19
4691742	14-15	21
4691903	1-95	10
4691904	1-95	9
4691905	1-95	12
4691906	1-95	13
4692029	13-11	
	13-13	
	13-17	
	13-18	
	13-19	
4692030	13-11	
	13-13	
	13-17	
	13-18	
	13-19	
4692190	11-380	
4692191	11-380	
	20-55	17
	20-55	17
	20-57	17
	20-57	17
	20-93	17
4692425	17-39	7
	20-55	8
	20-57	8
	20-93	8
4692707	11-380	
	20-55	17
	20-55	17
	20-57	17
	20-57	17
4692709	11-380	
	20-55	17
	20-55	17
	20-57	17
	20-57	17
	20-93	17

NUMERICAL INDEX (continued)

PART NO.	PAGE	ITEM
4692710	11-380	
	20-55	17
	20-55	17
	20-57	17
	20-57	17
4692711	11-380	
	20-55	17
	20-55	17
	20-57	17
	20-57	17
	20-93	17
4692712	11-380	
	20-55	17
	20-55	17
	20-57	17
	20-57	17
4692713	11-380	
	20-55	17
	20-55	17
	20-57	17
	20-57	17
4692715	11-380	
	20-55	17
	20-55	17
	20-57	17
	20-57	17
4692717	11-380	
	20-55	17
	20-55	17
	20-57	17
	20-57	17
4692734	20-55	17
	20-55	17
	20-57	17
	20-57	17
4692735	11-380	
	20-55	17
	20-55	17
	20-57	17
	20-57	17
	20-93	17
4692742	11-380	
4692747	11-380	
4692752	11-380	
4693044	5-21	10
4693169	7-11	2
	7-13	2
	7-23	10
4693223	11-79	6
	11-336	
4693306	8-9	7
4693334	17-29	19
	17-31	17
	18-45	17
	19-25	13
	20-39	13
4693335	17-29	18
	17-31	18
	18-46	20
	19-25	12
	20-39	12
4693394	15-25	14
4693435	16-97	1
4693474	12-17	11
	12-17	11
4693475	12-17	10
	12-17	10
4693513	6-9	2
	6-11	7
4693514	6-9	1
	6-11	1
4693515	6-9	3
4693516	6-9	
	6-11	1
4693518	18-9	34
	18-28	35
	18-28	35
4693519	18-9	34
	18-9	34
	18-9	34
	18-28	35
	18-28	35
	18-28	35
	18-28	35
	18-28	35
4693520	18-9	34
	18-9	34
	18-9	34
	18-9	34
	18-28	35
	18-28	35
	18-28	35
	18-28	35
4693521	18-9	34
	18-28	35
	18-28	35
4693522	18-9	34
	18-9	34
	18-28	35
4693533	22-69	3
4693534	22-69	4
4693541	14-15	1
	14-21	
4693546	1-87	15
	11-374	5
4693594	1-84	7
4693595	1-84	5
4693596	1-93	7
4693629	22-66	1
	22-71	1
4693630	22-66	2
	22-71	2
4693634	22-66	3
4693635	22-67	4
4693648	22-66	1
	22-71	1
4693649	22-66	2
	22-71	2
4693650	22-66	3
4693651	22-67	4
4693688	22-69	3
4693689	22-69	4
4693690	22-69	1
	22-73	1
4693691	22-69	2
	22-73	2
4693694	15-3	14
4693771	2-3	1
	2-9	1
	2-13	1
	2-19	1
4693772	15-26	46
	15-29	
	15-31	
4693809	19-3	4
4693810	19-3	4
4693811	19-3	4
	19-3	4
4693812	19-3	4
4693822	19-10	32
	19-14	32
4693823	19-10	32
	19-14	32
4693824	19-10	32
	19-10	32
	19-14	32
	19-14	32
4693825	19-10	32
	19-14	32
4693839	15-21	11
	15-23	15
4693855	1-84	7
4693856	1-30	8
4693880	1-99	1
4693881	1-99	2
4693882	1-99	1
4693883	1-99	2
4693884	1-99	1
4693885	1-99	2
4693933	22-66	3
4693934	22-67	4
4693935	22-66	1
	22-71	1
4693936	22-66	2
	22-71	2
4693946	19-23	
4693957	1-9	9
	1-21	8
4693958	1-9	10
	1-21	9
4693965	19-23	
4693966	19-23	
4693967	19-23	
4693981	19-25	
4693982	19-25	
4693983	19-25	
4694045	22-61	3
4694046	22-61	2
4694048	1-93	9
4694049	1-93	9
4694050	1-95	15
4694051	1-95	15
4694059	14-11	4
	14-15	5
4694060	14-11	7
	14-15	8
4694061	14-11	4
	14-15	5
4694066	16-15	13
	16-22	21
	16-25	31
4694067	16-11	11
	16-19	18
4694068	11-149	10
	11-151	11
	22-27	4

See Service Manual for service procedures.
©2026 HYSTER COMPANY

NUMERICAL INDEX (continued)

PART NO.	PAGE	ITEM
4694088	1-103	14
	1-107	18
	1-109	14
4694108	7-8	3
4694109	7-15	18
	7-17	15
4694125	19-25	
4694129	9-5	10
4694139	11-115	11
	11-121	3
4694140	11-121	2
4694178	7-8	4
4694182	7-21	14
	7-23	15
4694208	11-162	22
	11-166	25
4694209	11-162	26
	11-166	28
4694217	19-3	
	19-7	
	19-9	
	19-13	
4694222	19-3	
	19-7	
	19-9	
	19-13	
4694223	19-3	
	19-7	
	19-9	
	19-13	
4694224	19-3	
	19-7	
	19-9	
	19-13	
4694241	19-3	
	19-7	
	19-9	
	19-13	
4694267	16-79	8
4694270	16-79	1
4694273	16-79	2
4694274	1-53	2
4694275	1-53	1
4694281	16-123	5
4694282	16-123	3
4694283	16-123	7
4694284	16-123	6
4694462	22-79	1
	22-83	1
	22-85	
4694464	11-121	1
4694553	9-18	27
4694555	1-39	3
4694616	16-121	6
4694621	8-5	15
4694652	2-19	12
4694654	2-19	6
4694691	15-37	
4694723	1-96	4
4694725	16-97	2
	16-99	2
4694743	14-11	12
	14-15	13
4694783	16-109	11
	16-111	12
	16-114	12
	16-116	12
	16-119	12
4694819	11-73	3
	11-75	3
	11-99	1
	11-303	
	11-307	
4694820	11-73	3
	11-75	3
	11-99	1
	11-303	
	11-307	
4694821	11-73	3
	11-75	3
	11-99	1
	11-311	
	11-315	
4694822	11-73	3
	11-75	3
	11-99	1
	11-311	
	11-315	
4694861	11-99	4
4694864	2-9	11
	2-11	4
4695009	11-117	1
	11-117	13
	11-120	6
4695011	11-117	1
	11-117	13
	11-120	6
4695091	2-3	14
	2-5	4
	2-7	7
4695092	2-3	14
	2-5	4
	2-7	7
4695102	2-3	13
	2-5	3
	2-7	6
4695138	16-25	10
	16-29	31
4695151	12-13	3
	12-15	3
4695152	12-13	5
	12-15	5
4695163	16-109	9
	16-111	11
	16-114	11
	16-116	11
	16-119	11
4695166	16-85	15
4695167	16-85	13
4695200	1-84	9
4695201	16-109	8
	16-111	10
	16-114	8
	16-116	10
	16-119	10
4695205	1-121	7
4695206	1-121	7
4695209	14-15	2
4695218	10-3	21
	10-5	12
4695219	12-13	4
	12-15	4
4695221	11-73	26
	11-76	27
	11-337	
4695241	11-106	10
	11-127	18
	11-129	18
	11-131	18
	11-133	18
	11-135	18
	11-137	18
	11-139	18
	11-141	18
4695242	11-106	14
	11-127	20
	11-129	20
	11-131	20
	11-133	20
	11-135	20
	11-137	20
	11-139	20
	11-141	20

NUMERICAL INDEX (continued)

PART NO.	PAGE	ITEM
4695243	11-106	13
	11-127	21
	11-129	21
	11-131	21
	11-133	21
	11-135	21
	11-137	21
	11-139	21
	11-141	21
4695326	17-31	
4695327	17-31	
4695328	17-31	
4695333	17-29	
4695335	17-29	
4695338	20-39	
4695350	18-45	
4695352	18-45	
4695358	18-45	
4695359	18-45	
4695360	18-45	
4695420	16-87	1
4695421	16-87	15
4695422	16-87	11
	16-89	6
4695423	16-87	10
4695424	16-87	12
4695470	22-43	11
	22-45	11
4695485	11-377	
4695487	11-377	
4695488	11-377	
4695489	11-377	
4695491	11-377	
4695492	11-377	
4695537	15-25	12
4695539	15-25	13
4695558	15-25	16
4695567	15-25	17
4695588	11-79	8
	11-334	
4695592	15-25	15
4695664	11-377	
4695666	22-59	8
4695667	15-25	1
	15-29	12
	15-31	11
4695854	16-101	1
	16-103	1
	16-105	1
	16-107	1
	16-109	1
	16-111	1
	16-113	1
	16-116	1
	16-118	1
4695855	16-101	5
	16-103	5
	16-105	5
	16-107	5
4695856	16-101	9
	16-105	9
	16-111	14
	16-114	14
	16-116	14
	16-119	14
4695865	1-99	5
4695866	1-99	4
4695879	16-97	3
	16-99	3
4695886	2-19	16
4695999	3-41	12
	11-9	27
	11-33	13
	11-39	13
	11-56	4
	11-391	5
4696001	11-9	18
	11-13	18
	11-17	16
	11-29	4
	11-31	25
	11-33	4
	11-37	4
	11-39	4
	11-43	4
	11-47	4
4696002	3-41	9
	11-391	2
4696046	16-103	9
	16-103	13
	16-107	9
	16-111	14
	16-114	14
	16-116	14
	16-116	18
	16-119	14
	16-119	18
4696052	18-53	13
	18-56	13
	18-60	13
	18-64	13
	19-29	18
	19-32	18
	20-45	12
	20-49	12
	20-89	12
4696103	17-29	13
	17-33	5
4696104	17-29	12
	17-33	6
4696499	1-27	8
4696717	11-67	14
	11-345	17
	11-347	20
4696718	11-67	13
4696719	11-66	12
4696720	11-101	1
4696721	11-66	7
4696722	11-66	4
4696723	11-66	4
	11-66	5
	11-66	6
	11-66	7
	11-66	8
	11-66	9
	11-101	4
	11-101	5
	11-101	6
	11-101	7
	11-101	8
	11-101	9
4696724	11-66	5
4696725	11-66	6
4696726	11-66	8
4696727	11-66	9
4696729	11-101	5
4696731	11-101	7
4696732	11-101	8
4696759	16-79	4
4696844	12-17	13
4697003	1-27	1
4697053	11-59	5
	11-61	9
	11-73	4
	11-75	4
4697054	11-59	4
	11-61	4
	11-62	2
	11-65	1
4697066	11-69	10
4697095	22-9	3
4697096	22-9	1

See Service Manual for service procedures.
©2026 HYSTER COMPANY

NUMERICAL INDEX (continued)

PART NO.	PAGE	ITEM
4697097	22-9	4
	22-10	4
4697098	22-9	2
4697252	1-113	11
	1-117	11
4697304	10-3	17
	10-5	25
4697307	10-3	11
4697309	10-3	5
4697317	10-9	5
4697318	9-3	25
	10-9	9
4697340	11-387	14
4697401	11-151	13
4697414	1-99	10
4697531	11-73	7
	11-75	7
	11-81	1
4697586	1-27	3
4697603	11-359	4
4697604	11-359	1
4697605	11-360	1
4697606	22-30	9
4697609	11-73	6
	11-75	6
	11-102	1
4697683	1-99	1
	1-99	2
4697699	10-7	1
	10-11	1
4697700	9-3	4
4697730	1-123	2
4697731	1-123	2
4697732	1-123	2
4697737	16-81	23
	16-85	21
4697738	16-81	24
	16-85	22
4697739	16-81	28
	16-85	26
4697740	16-82	29
	16-85	27
4697741	16-81	23
	16-85	21
4697742	16-81	24
	16-85	22
4697746	16-91	1
	16-93	1
4697747	16-91	9
	16-93	9
4697770	10-3	21
	10-5	12
4697772	1-9	36
	1-13	39
	1-17	34
	1-23	28
4697773	1-9	35
	1-13	38
	1-17	33
4697921	11-79	5
	11-146	24
	11-356	14
4698017	1-113	6
	1-117	6
4698100	16-81	13
	16-85	13
4698101	16-81	15
	16-85	15
4698102	16-81	20
4698103	16-81	19
4698104	16-82	29
	16-82	29
	16-85	27
4698105	16-81	28
	16-82	28
	16-85	26
4698109	19-25	14
4698110	19-25	15
4698111	19-25	14
4698154	11-21	8
	11-73	12
	11-76	12
4698172	22-65	1
4698174	22-65	3
4698305	14-11	9
	14-15	10
4698341	11-115	6
	11-115	6
	11-343	
4698343	16-11	1
	16-15	1
4698347	16-81	18
4698357	15-21	14
4698358	15-21	7
4698359	15-21	13
4698360	9-3	12
4698365	15-21	2
4698374	15-21	4
4698376	15-21	12
4698503	11-343	10
4698509	1-9	35
	1-13	38
	1-17	33
	1-23	29
4698537	16-121	11
	16-123	11
4698540	16-121	12
	16-123	12
4698541	16-121	10
	16-123	10
4698604	12-17	6
4698608	1-9	26
	1-14	49
	1-18	44
	11-20	2
4698609	1-21	7
	1-23	7
	11-20	2
4698767	1-119	14
4698768	1-119	14
4698771	12-17	19
4698772	12-17	18
4699507	16-11	31
	16-15	11
4699508	16-91	1
	16-93	1
4699509	16-91	9
	16-93	9
4699510	22-59	9
4699632	1-84	3
4699633	1-93	4
	1-95	4
4699634	1-93	4
	1-95	4
4699635	1-93	4
	1-95	4
4699636	1-84	3
4699673	11-149	9
	11-151	1
4699760	16-121	5
4699761	16-121	3
4699762	16-121	7
4699763	16-121	15
	16-123	15
4699802	11-13	19
4699829	11-383	10
4699869	11-7	13
	11-56	
4699870	11-7	14
	11-27	16
4699877	22-49	18
4699878	22-49	12
4700000	1-82	2
4700042	16-25	6
	16-29	12
4700045	16-91	1
	16-93	1
4700046	16-91	9
	16-93	9
4700066	11-198	25
	11-209	7
	11-222	20
	11-234	20
	11-242	49
	11-260	20
	11-294	21
	11-295	26
	11-364	14
4700067	11-198	23
	11-211	34
	11-222	18

NUMERICAL INDEX (continued)

PART NO.	PAGE	ITEM
	11-234	18
	11-244	73
	11-260	18
	11-294	22
4700148	16-69	3
4700149	16-69	4
	16-71	4
4700150	16-71	3
4700167	8-5	19
	8-14	3
4700168	8-9	15
4700170	11-13	15
4700171	11-13	12
4700172	11-13	12
4700173	11-73	11
	11-363	
4700174	11-73	11
	11-363	
4700175	11-73	11
	11-76	11
	11-363	
	11-365	
4700207	11-377	
4700208	11-377	
4700210	11-377	
4700211	11-377	
4700240	11-377	
4700241	11-377	
4700242	11-377	
4700243	11-377	
4700244	11-377	
4700245	11-377	
4700248	16-85	18
4700251	18-65	3
	18-66	3
4700252	18-65	9
	18-66	9
4700253	17-4	7
	17-8	7
	17-16	7
	17-20	7
	17-43	7
	17-49	7
	18-3	5
	18-23	5
	20-4	15
	20-22	15
	20-61	15
	20-75	15
4700254	17-4	6
	17-8	6
	17-16	6
	17-20	6
	17-43	6
	17-49	6
	18-3	4
	18-23	4
	20-4	16
	20-22	16
	20-61	16
	20-75	16
4700262	11-377	
4700263	11-377	
4700264	11-377	
4700265	11-377	
4700266	11-377	
4700267	11-377	
4700268	11-377	
4700270	11-13	15
4700322	11-377	
4700323	11-377	
4700339	22-23	1
4700350	11-20	4
4700371	11-20	1
4700372	11-20	3
4700616	17-4	8
	17-8	8
	17-16	8
	17-20	8
	17-43	8
	17-49	8
	18-23	7
	20-4	18
	20-8	24
	20-22	18
	20-26	24
	20-61	18
	20-64	24
	20-75	18
	20-78	24
4700632	18-9	34
	18-28	35
4700685	11-73	8
	11-75	8
	11-156	
4700686	11-73	9
	11-75	9
	11-157	
4700802	1-57	20
	1-61	20
	1-65	14
	1-67	14
	1-69	18
4700976	1-57	28
	1-61	28
	1-65	6
	1-67	6
	1-69	9
4701077	22-49	19
4701079	11-153	3
4701322	1-82	5
4701323	1-82	6
4701426	16-35	
4701427	16-35	
4701428	16-41	
4701429	16-41	
4701488	11-51	8
	11-153	1
	14-11	13
	14-15	14
4701491	16-69	1
	16-71	1
4701696	12-17	21
4701697	12-17	22
4701715	1-89	8
4701721	11-105	1
	11-105	2
	11-105	5
	11-127	16
	11-129	16
	11-131	16
	11-133	16
	11-135	16
	11-137	16
	11-139	16
	11-141	23
4701726	11-127	23
	11-129	23
	11-131	23
	11-133	23
	11-135	24
	11-137	23
	11-139	24
	11-141	22
4701727	11-127	22
	11-129	22
	11-131	22
	11-133	22
	11-135	23
	11-137	22
	11-139	

©2026 HYSTER COMPANY

NUMERICAL INDEX (continued)

PART NO.	PAGE	ITEM
	11-141	23
4701729	11-106	11
	11-127	19
	11-129	19
	11-131	19
	11-133	19
	11-135	19
	11-137	19
	11-139	19
	11-141	19
4701730	11-185	2
	11-191	3
	11-203	6
	11-215	3
	11-227	5
	11-241	36
	11-247	2
	11-253	5
	11-265	4
	11-283	29
	11-289	35
4701783	11-109	1
	11-110	6
	11-112	1
4701824	1-82	12
4701825	1-82	11
4701851	16-32	1
4701852	16-33	1
4701868	22-25	1
	22-26	1
4701869	16-33	2
4701870	11-53	24
	11-55	3
	11-176	
4701933	1-39	6
4701934	1-33	20
	1-35	20
4701964	6-5	29
4702031	16-19	18
4702032	16-15	13
4702043	11-105	3
4702044	11-106	6
4702070	1-76	4
	1-77	4
4702073	1-76	5
4702075	1-78	5
4702076	1-78	4
	1-81	4
4702114	11-345	1
	11-352	20
4702123	9-7	41
4702124	9-7	42
4702125	9-7	41
	9-11	27
	9-15	34
4702126	9-21	36
4702151	16-20	41
	16-22	41
4702208	11-23	28
	11-27	14
	11-39	32
	11-43	30
	11-47	30
4702210	18-51	1
	18-59	1
4702299	6-5	30
4702429	11-73	2
	11-75	2
	11-316	
4702430	11-73	2
	11-75	2
	11-316	
4702472	11-51	1
4702473	11-51	1
4702474	11-149	13
4702475	11-79	1
4702626	11-27	15
4702660	11-106	15
4702661	11-106	7
4702662	11-106	8
4702663	11-106	8
4702664	11-105	3
4702665	11-106	12
4702667	11-106	16
4702668	11-105	
4702669	11-105	
4702670	11-106	18
4702671	11-106	17
4702780	18-3	7
4703273	11-101	9
4703442	11-333	
4703650	22-28	8
4703902	11-73	9
	11-75	9
	11-157	
	11-157	
4703982	11-152	4
4703990	11-124	2
4703991	11-124	1
4703992	11-124	2
4703993	11-124	1
4704017	22-49	1
4704018	22-49	1
4704019	22-49	1
4704038	11-191	
	11-197	
4704039	14-11	4
	14-15	5
4704040	14-11	4
	14-15	5
4704041	14-11	4
	14-15	5
4704042	14-11	4
	14-15	5
4704194	22-50	8
4704195	22-50	9
4704311	16-20	42
	16-22	42
4704312	16-19	4
	16-22	4
4705426	11-79	1
4705427	11-79	1
4705560	22-28	3
4705767	22-55	3
	22-57	13
4705768	16-69	2
	16-71	2
4705769	22-55	3
	22-57	13
4706197	7-21	5
	7-23	5
4706276	22-53	11
4706277	22-53	11
4706515	6-9	18
	6-11	22
4706640	15-23	8
	15-25	3
	15-33	15
4706641	15-23	7
	15-25	4
	15-33	17
4706642	15-23	11
	15-25	6
	15-33	13
	15-35	18
4706643	15-23	12
	15-25	7
	15-33	11
	15-35	12
4706644	15-23	10
	15-25	9
	15-33	6
	15-35	13
4706645	15-23	9

©2026 HYSTER COMPANY

NUMERICAL INDEX (continued)

PART NO.	PAGE	ITEM
	15-25	10
	15-33	8
	15-35	19
4706646	15-25	5
	15-33	16
	15-35	3
4706647	15-25	8
	15-33	9
	15-35	1
4706648	15-25	11
	15-33	1
4706649	15-3	11
4706650	15-3	12
4706651	15-23	17
4706652	15-23	16
	15-25	33
	15-33	4
	15-35	11
4706855	9-5	22
4706932	11-73	9
	11-75	9
	11-157	
	11-157	
4706998	1-9	14
	1-13	15
	1-17	10
	1-21	13
	1-23	12
4707016	16-81	1
4707048	9-7	42
	9-11	26
	9-15	33
4707059	1-87	8
4707062	16-5	4
4707063	16-5	7
4707064	11-185	2
	11-191	3
	11-203	6
	11-215	3
	11-227	5
	11-241	36
	11-247	2
	11-253	5
	11-265	4
	11-283	29
	11-289	35
4707391	14-11	13
	14-15	14
4707394	16-121	2
4707422	16-15	25
	16-22	26
	16-25	34
4707424	1-55	1
4707444	1-5	6
4707445	1-5	7
4707525	11-91	2
	11-331	
4707559	16-5	1
4707618	16-77	8
4707619	16-77	9
4707864	1-71	
	1-76	1
	1-77	1
	1-78	1
	1-81	1
	1-82	1
4707890	1-33	18
	1-35	18
	1-37	9
	1-42	2
	1-45	18
	1-47	15
4707954	16-7	7
4707955	16-7	6
4707956	16-7	6
4707988	11-9	28
	11-33	14
	11-39	14
	11-56	5
4708026	12-13	16
4708075	1-57	3
	1-61	3
	1-65	2
	1-67	2
	1-69	7
4708086	9-21	37
4708114	10-3	23
	10-5	11
4708117	12-13	14
4708119	11-101	2
4708120	11-101	10
4708128	10-3	34
	10-5	22
4708135	11-69	5
4708143	9-5	5
4708168	1-33	13
	1-35	13
4708264	1-57	1
	1-61	1
	1-65	3
	1-67	3
	1-69	2
	1-71	
	1-76	1
	1-77	1
	1-78	1
	1-81	1
	1-82	1
4708867	1-69	24
4708868	1-69	23
4708869	1-69	22
4708881	1-57	4
	1-61	4
	1-65	34
	1-67	34
4708882	1-57	6
	1-61	6
	1-65	23
	1-67	23
4708883	1-57	5
	1-61	5
4708886	15-3	13
4709264	22-12	2
	22-14	2
	22-16	2
	22-20	3
4709266	22-10	3
	22-12	3
4709267	22-12	4
4709268	22-16	3
4709269	22-18	2
4709270	22-12	1
	22-14	1
	22-16	1
	22-18	1
	22-20	1
4709271	22-18	3
	22-20	5
4709272	22-18	4
4709273	22-14	3
4709404	1-65	33
	1-67	33
4709408	15-9	12
4709492	1-57	22
	1-61	22
	1-65	19
	1-67	19
	1-69	36
4709493	1-57	10
	1-61	10
	1-65	21
	1-67	21
4709996	15-3	9
4709997	15-3	6
4710000	11-73	5
	11-203	
	11-209	
4710001	11-73	5
	11-203	
	11-209	
4710015	8-6	25
	8-11	
4710020	11-73	5
	11-179	
4710131	11-75	5
	11-91	1
	11-281	
	11-293	
4710277	16-123	4
4710278	16-123	2
4710385	11-65	6
4710421	18-51	8
	18-55	8
4710422	18-51	8
4710423	18-51	8
	18-55	8
4710424	18-51	8
	18-55	8
4710425	18-51	8
	18-55	8
4710426	18-52	8

See Service Manual for service procedures.
©2026 HYSTER COMPANY

NUMERICAL INDEX (continued)

PART NO.	PAGE	ITEM
	18-55	8
4710427	18-52	8
	18-55	8
4710428	18-52	8
	18-55	8
4710429	18-52	8
	18-55	8
4710432	18-52	8
	18-55	8
4710433	18-52	8
4710437	18-52	8
	18-55	8
4710438	18-52	8
4710441	18-52	8
	18-55	8
4710444	18-52	8
4710448	18-52	8
	18-55	8
4710449	18-8	18
	18-8	18
	18-8	18
	18-28	18
	18-28	18
4710450	18-8	18
	18-8	18
	18-28	18
	18-28	18
	18-28	18
4710451	18-8	18
	18-8	18
	18-28	18
	18-28	18
	18-28	18
	18-28	18
4710452	18-8	18
	18-8	18
	18-8	18
	18-28	18
	18-28	18
	18-28	18
4710453	18-8	18
	18-28	18
4710454	18-8	18
4710471	18-51	6
	18-55	6
4710472	18-51	6
4710473	18-51	6
	18-55	6
4710474	18-51	6
	18-55	6
4710475	18-51	6
	18-55	6
4710476	18-51	6
	18-55	6
4710477	18-51	6
	18-55	6
4710478	18-51	6
	18-55	6
4710479	18-51	6
	18-55	6
4710482	18-51	6
	18-55	6
4710483	18-51	6
4710487	18-51	6
	18-55	6
4710488	18-51	6
4710491	18-51	6
	18-55	6
4710494	18-51	6
4710498	18-51	6
	18-55	6
4710694	11-390	
	16-77	
4710709	2-3	12
	2-7	
4710710	2-3	12
	2-7	
4710711	2-3	12
	2-7	
4710799	16-19	9
	16-22	8
	16-125	
4710800	16-19	9
	16-22	8
	16-125	
4710801	16-25	1
	16-29	14
	16-126	
4710908	11-62	9
	11-65	10
	11-321	
4710909	11-62	9
	11-65	10
	11-321	
4710912	11-143	3
	11-355	
4710913	11-143	3
	11-355	
4710914	11-143	3
	11-355	
4710915	11-143	3
	11-355	
4711034	11-62	8
4711135	12-13	19
4711144	16-91	1
	16-93	1
4711145	16-91	9
	16-93	9
4711321	11-17	12
4711322	11-17	17
4711323	11-9	13
4711324	11-9	19
	11-23	29
4711325	11-17	17
4711326	11-29	1
	11-37	1
	11-43	1
	11-47	1
4711327	11-29	6
	11-31	1
4711328	11-33	1
	11-39	1
4711329	11-23	29
	11-33	6
4711332	11-23	29
4711334	11-23	29
	11-39	6
4711335	11-43	6
4711336	11-47	6
4711338	11-37	6
4711386	15-37	1
4711432	16-19	1
	16-22	1
4711710	11-53	1
	11-55	2
	11-169	
	11-173	
4711711	11-53	2
	11-55	1
	11-161	
	11-165	
4711760	16-5	4
4711761	16-5	7
4711831	2-17	2
4711992	18-45	13
	19-25	15
	20-39	15
4711993	18-45	14
	20-39	14
4712421	11-75	9
	11-157	
4712485	11-325	
	11-329	8
4712486	11-325	
	11-329	8
4712487	11-325	
	11-329	8
4712488	11-325	
	11-329	8
4712489	11-325	
	11-329	8
4712490	11-158	
4712559	1-57	43
	1-61	43
	1-65	43
	1-67	43
	1-69	35
4712610	9-3	16
4712611	1-33	23
	1-35	23
	1-37	14
4712651	15-3	15
4712747	11-89	24
4712748	11-329	3
4713027	15-37	1
4713029	2-20	2

NUMERICAL INDEX (continued)

PART NO.	PAGE	ITEM
4713580	11-81	
4713638	16-7	11
	16-9	11
4713639	16-9	11
4713692	9-3	1
4713693	10-11	13
4713790	10-5	21
4714225	11-10	44
	11-18	36
4714387	10-5	5
4714773	11-79	7
	11-113	1
4714834	14-12	19
4714848	11-23	30
4714849	11-23	30
4714869	22-66	1
4714870	22-66	2
4714879	14-11	17
4714880	14-11	17
4714901	16-69	8
	16-71	8
4715087	22-73	2
4715088	22-73	1
4715089	22-73	1
4715090	22-73	2
4715091	22-66	1
	22-71	1
4715092	22-66	2
	22-71	2
4715093	22-71	1
4715094	22-71	2
4715095	22-66	1
	22-71	1
4715096	22-66	2
	22-71	2
4715099	22-66	3
4715100	22-67	4
4715101	22-66	3
4715102	22-67	4
4715103	22-66	3
4715104	22-67	4
4715157	1-57	30
	1-61	30
	1-65	5
	1-67	5
	1-69	4
4715158	1-57	29
	1-61	29
	1-65	4
	1-67	4
	1-69	3
4715161	1-119	10
4715195	1-119	
4715321	22-40	1
4715361	22-40	1
4715432	22-63	1
4715433	22-63	1
4715468	16-69	2
	16-71	2
4715481	11-73	10
	11-75	10
	11-375	
4715482	11-73	10
	11-75	10
	11-373	
4715483	11-73	10
	11-75	10
	11-375	
4715484	11-73	10
	11-75	10
	11-373	
4715485	11-73	10
	11-75	10
	11-373	
4715486	11-73	10
	11-76	10
	11-373	
4715515	1-121	2
4715531	1-119	4
4715615	15-38	1
	15-39	
4715875	22-65	2
4715966	11-151	19
4715967	11-151	19
4716034	15-37	1
4716247	15-25	18
4716248	15-25	19
4716267	12-4	18
4716268	12-17	24
4716269	12-4	18
	15-25	26
4716283	16-69	8
	16-71	8
4716297	16-79	3
4716298	16-79	7
4716339	11-101	3
4716340	15-21	17
	15-23	17
4716359	11-81	
4716373	11-66	1
4716470	11-151	14
4716502	11-69	7
4716504	16-81	16
4716505	16-81	17
4716506	16-81	14
4716507	16-81	15
4716508	16-81	13
4716645	11-76	11
	11-366	
4716646	11-76	11
	11-368	
4716705	11-151	8
4716829	2-13	21
4716881	11-75	5
	11-253	
	11-259	
4716883	11-75	5
	11-185	
4716886	11-75	5
	11-215	
	11-221	
4716887	11-75	5
	11-227	
	11-233	
4716888	11-75	5
	11-247	
4717032	13-11	
	13-13	
	13-17	
	13-18	
	13-18	
	13-19	
4717033	13-11	
	13-13	
	13-17	
	13-19	
4717060	11-383	
4717200	9-18	27
4717370	11-76	24
4717524	6-11	12
4717525	6-9	3
4717526	6-9	
4717590	1-27	8
4717591	1-27	3
4717758	14-11	1
	14-19	
4717832	11-101	4
4717833	11-101	6
4717879	22-59	7
4717888	10-5	22
4717926	11-170	34
	11-174	31
4718037	3-25	
4718038	3-25	
4718058	1-77	5
4718062	15-29	10
4718063	22-23	6
4718234	20-61	
	20-63	
	20-67	
4718237	20-61	
	20-63	
	20-67	
4718239	20-61	
	20-63	
	20-67	
4718241	20-61	
	20-63	
	20-67	
4718243	20-61	
	20-63	
	20-67	
4718258	20-75	
	20-77	
	20-81	
4718260	20-75	
	20-77	
	20-81	

See Service Manual for service procedures.

©2026 HYSTER COMPANY

NUMERICAL INDEX (continued)

PART NO.	PAGE	ITEM
4718262	20-75	
	20-77	
	20-81	
4718264	20-75	
	20-77	
	20-81	
4718268	20-75	
	20-77	
	20-81	
4718272	20-75	
	20-77	
	20-81	
4718275	20-75	
	20-77	
	20-81	
4718292	17-43	
4718295	17-43	
4718298	17-43	
4718301	17-43	
4718304	17-43	
4718307	17-43	
4718310	17-43	
4718312	17-43	
4718317	17-43	
4718323	17-43	
4718331	17-49	
4718334	17-49	
4718335	17-49	
4718337	17-49	
4718340	17-49	
4718343	17-49	
4718346	17-49	
4718349	17-49	
4718356	17-49	
4718360	17-49	
4718541	1-77	7
4718595	1-119	14
4718596	1-119	14
4718599	1-119	14
4718600	1-119	14
4718601	1-119	14
4718602	1-119	14
4718624	1-77	5
4718745	16-81	1
4718748	16-81	1
4719045	20-61	
	20-63	
	20-67	
4719047	20-61	
	20-63	
	20-67	
4719074	19-32	21
4719075	19-32	22
4719076	19-32	21
4719077	19-32	21
	19-32	21
4719078	19-32	21
	19-32	21
4719079	19-32	21
	19-32	21
4719080	19-32	21
	19-32	21
4719081	19-32	21
	19-32	21
4719082	19-32	21
	19-32	22
4719083	19-32	22
4719084	19-32	22
	19-32	22
4719085	19-32	22
	19-32	22
4719086	19-32	22
	19-32	22
4719087	19-32	22
	19-32	22
4719090	19-29	22
4719091	19-29	22
4719092	19-29	22
4719096	19-29	21
4719097	19-29	21
4719098	19-29	21
4719099	19-29	21
4719101	19-32	22
	19-32	22
4719105	19-29	22
4719149	18-41	3
	20-17	3
	20-71	3
4719231	11-69	14
4719232	11-69	14
4719233	11-69	14
4719585	11-117	8
4719815	1-105	
4719819	1-105	
4720071	15-29	5
4720072	15-29	8
4720075	16-99	1
4720078	15-29	22
	15-31	17
4720079	15-29	18
	15-31	14
4720169	15-29	11
4720170	16-25	10
4720171	19-10	34
	19-14	34
4720435	19-9	25
4720509	11-112	2
4720510	11-112	2
4720511	11-112	2
4720512	11-112	2
4720947	11-117	4
	11-120	1
4721113	16-91	1
	16-93	1
4721114	16-91	9
	16-93	9
4721115	16-91	1
	16-93	1
4721116	16-91	9
	16-93	9
4721117	16-87	1
4721118	16-87	15
4721119	16-91	1
	16-93	1
4721120	16-91	9
	16-93	9
4721150	15-41	
4721243	18-59	8
	18-63	8
4721244	18-59	8
4721245	18-59	8
	18-63	8
4721246	18-59	8
	18-63	8
4721247	18-59	8
	18-63	8
4721248	18-59	8
	18-63	8
4721249	18-59	8
	18-63	8
4721250	18-59	8
	18-63	8
4721251	18-59	8
	18-63	8
4721252	18-65	7
	18-66	7
4721253	18-65	5
	18-66	5
4721254	18-59	8
	18-63	8
4721255	18-60	8
4721259	18-52	8
	18-55	8
	18-60	8
	18-63	8
4721260	18-52	8
	18-60	8
4721263	18-52	8
	18-55	8
	18-60	8
	18-63	8
4721266	18-52	8
	18-60	8
4721270	18-52	8
	18-55	8
	18-60	8
	18-63	8
4721293	18-59	6
	18-63	6
4721294	18-59	6
4721295	18-59	6
	18-63	6
4721296	18-59	6
	18-63	6
4721297	18-59	6
	18-63	6
4721298	18-59	6
	18-63	6
4721299	18-59	6
	18-63	6
4721300	18-59	6
	18-63	6
4721301	18-59	6
	18-63	6
4721304	18-59	6
	18-63	6
4721305	18-59	6
4721309	18-51	6
	18-55	6
	18-59	6
	18-63	6
4721310	18-51	6
	18-59	6
4721313	18-51	6
	18-55	6
	18-59	6
	18-63	6
4721316	18-51	6
	18-59	6
4721320	18-51	6
	18-55	6
	18-59	6
	18-63	6
4721741	1-53	4
4721749	16-25	14
	16-29	18
4721837	11-76	11

©2026 HYSTER COMPANY

NUMERICAL INDEX (continued)

PART NO.	PAGE	ITEM
	11-371	
4721876	1-33	22
4721879	1-33	21
4721888	15-29	3
	15-31	2
4721913	11-359	4
4721914	11-360	1
4721915	14-16	23
4721918	12-17	11
4721919	12-17	10
4721923	22-37	4
4721996	15-29	17
	15-31	13
4721999	16-99	3
4722006	5-5	3
4722025	11-388	24
4722044	5-5	2
4722060	1-84	9
4722069	1-84	3
4722070	1-84	3
4722167	22-77	1
	22-80	1
	22-89	
4722168	22-77	1
	22-80	1
	22-89	
4722214	22-37	6
4722373	22-49	1
4722374	22-49	1
4722375	22-49	1
4722466	22-32	1
	22-34	1
4722467	22-32	1
	22-34	1
4722799	1-81	5
4722912	11-241	36
	11-265	4
	11-289	35
4723173	1-81	7
4723174	1-81	5
4723209	11-75	5
	11-185	
4723210	12-13	6
	12-15	6
4723353	11-69	7
4723688	16-7	7
4723689	16-7	6
	16-9	6
4723690	16-7	6
	16-9	6
4723691	16-9	7
4723692	16-9	7
4723858	11-388	19
4723859	11-388	19
4723860	11-388	24
4723861	16-19	16
	16-22	7
4724060	17-12	3
	17-46	3
4724143	7-15	18
	7-17	15
	7-19	23
4724144	7-15	19
	7-17	16
	7-19	22
4724260	11-75	5
	11-215	
	11-221	
4724261	11-75	5
	11-227	
	11-233	
4724417	11-75	5
	11-253	
	11-259	
4724418	11-75	5
	11-247	
4724603	14-15	1
4724616	6-11	10
4724706	1-39	1
4724749	1-33	26
	1-35	26
	1-37	5
4724842	17-33	1
	17-35	
4724844	17-33	1
	17-35	
4724845	17-33	1
	17-35	
4725040	11-75	5
	11-253	
	11-259	
4725041	11-75	5
	11-247	
4725142	16-91	1
	16-93	1
4725143	16-91	9
	16-93	9
4725371	17-33	
4725374	17-33	
4725375	17-33	
4726321	12-17	22
4726322	12-17	21
4726450	15-9	13
4726451	15-5	4
4726452	15-5	4
4726481	16-91	1
	16-93	1
4726482	16-91	9
	16-93	9
4726883	15-9	13
4727004	16-79	8
4727005	16-79	7
4727009	16-35	
	16-39	
4727010	16-39	
4727011	16-39	
4727012	16-41	
	16-45	
4727013	16-45	
4727014	16-45	
4727017	16-39	
4727018	16-39	
4727019	16-45	
4727020	16-45	
4727023	16-35	
	16-39	
4727024	16-39	
4727025	16-45	
4727026	16-45	
4727028	16-58	
4727029	16-58	
4727032	16-39	
4727033	16-39	
4727034	16-41	
	16-45	
4727035	16-45	
4727038	16-39	
4727039	16-39	
4727040	16-45	
4727041	16-45	
4727044	16-66	
4727045	16-66	
4727046	16-66	
4727047	16-66	
4727260	20-51	7
	20-53	7
4727261	20-51	2
	20-53	2
4727263	16-25	22
	16-29	8
4727318	16-25	23
	16-29	9
4727492	7-19	20
4727575	1-42	5
4727576	1-42	6
4727608	11-59	4
	11-61	4
	11-62	2
	11-65	1
4727631	14-11	7
	14-15	8
4727632	14-11	4
	14-15	5
4727633	14-11	4
	14-15	5
4727816	1-33	13
	1-35	13
	1-37	12
4728039	8-6	25
4728040	8-6	25
4728079	15-9	12
4728300	18-51	5
	18-55	5
	18-59	5
	18-63	5
4728301	18-51	5
	18-55	5
	18-59	5
	18-63	5
4728302	18-51	5
	18-55	5
	18-59	5
	18-63	5
4728303	18-51	5
	18-59	5
4728304	18-51	5
	18-55	5

See Service Manual for service procedures.
©2026 HYSTER COMPANY

NUMERICAL INDEX (continued)

PART NO.	PAGE	ITEM
	18-59	5
	18-63	5
4728305	18-51	5
	18-59	5
4728306	18-51	5
	18-59	5
4728635	11-117	14
4728697	4-31	3
	5-33	15
4728698	5-33	24
4728710	11-107	4
	11-340	
4728711	11-107	4
	11-338	
4728991	11-69	7
4729072	16-7	7
4729073	16-9	7
4729074	16-9	7
4729265	16-7	6
	16-9	6
4729266	16-7	6
	16-9	6
4729479	22-77	4
4729480	22-77	3
4729711	22-38	3
4729912	15-38	1
	15-39	
4729931	11-121	1
	11-121	2
	11-123	1
4730522	1-72	
	1-76	1
	1-77	1
	1-78	1
	1-81	1
	1-82	1
4730523	1-57	1
	1-61	1
	1-65	3
	1-67	3
	1-69	2
	1-75	
	1-76	1
	1-77	1
	1-78	1
	1-81	1
	1-82	1
4730772	20-12	25
	20-30	25
	20-67	25
	20-81	25
4730800	11-215	
	11-221	
4730801	11-239	
4731101	16-91	1
	16-93	1
4731102	16-91	9
	16-93	9
4731449	2-17	5
4731450	2-17	8
4731487	11-75	5
	11-265	
	11-271	
	11-277	
4731488	11-75	5
	11-265	
	11-271	
	11-277	
4731517	11-239	
4731518	11-239	
4731845	18-19	3
	18-37	3
4732089	17-33	
4732090	17-33	
4732199	6-2	4
	6-3	4
4732200	1-96	2
4732201	1-96	3
4732202	1-96	4
4732203	1-96	4
4732204	1-96	4
4732205	1-96	4
4732559	11-53	2
	11-165	
4732560	11-55	1
4732943	1-53	1
4732944	1-53	2
4733027	1-53	4
4733148	6-11	2
4733224	18-20	
	18-38	
4733256	18-19	2
4733257	18-37	2
4733258	18-19	2
	18-37	2
4733259	18-19	2
	18-37	2
4733260	18-19	2
	18-37	2
4733261	18-19	2
	18-37	2
4733262	18-19	2
	18-37	2
4733263	18-19	2
	18-37	2
4733264	18-19	2
	18-37	2
4733265	18-19	2
4733266	18-37	2
4733267	18-37	2
4733270	18-19	2
4733271	18-37	2
4733274	18-19	2
4733275	18-37	2
4733279	18-19	2
	18-37	2
4733288	18-19	
4733290	18-19	
4733291	18-19	
4733292	18-19	
4733293	18-19	
4733294	18-19	
4733295	18-19	
4733296	18-19	
4733297	18-19	
4733302	18-19	
4733306	18-19	
4733311	18-19	
4733319	18-37	
4733320	18-37	
4733321	18-37	
4733322	18-37	
4733323	18-37	
4733324	18-37	
4733325	18-37	
4733326	18-37	
4733328	18-37	
4733329	18-37	
4733333	18-37	
4733337	18-37	
4733341	18-37	
4733396	11-75	5
	11-91	1
	11-287	
	11-299	
4733755	19-13	24
4733832	16-12	
	16-15	
	16-20	
	16-23	
	16-26	
4734340	9-5	10
4734400	19-13	25
4734401	19-13	22
4734473	19-13	23
4734523	16-81	18
4734555	16-81	13
4734556	16-81	15
4734557	16-81	13
4734558	16-81	15
4734784	19-32	23
4734785	19-31	2
4734865	11-347	1
4735141	1-93	4
	1-95	4
4735142	1-93	4
	1-95	4
4735143	1-93	4
	1-95	4
4735184	16-89	21
4735185	16-89	3
4735186	16-89	5
4735191	16-89	22
4735554	19-31	1
4735555	19-31	1
4735556	19-29	1
	19-31	1
4735557	19-29	1
	19-31	1
4735558	19-29	1
	19-31	1
4735559	19-29	1
	19-31	1
4735560	19-31	1
4735561	19-31	1
4735562	19-31	1

©2026 HYSTER COMPANY

NUMERICAL INDEX (continued)

PART NO.	PAGE	ITEM
4735563	19-31	1
4735564	19-31	1
4735565	19-31	1
4735566	19-31	1
4735570	9-3	25
4736088	11-316	
4736089	11-316	
4736590	4-35	5
4736625	4-35	5
4736626	4-35	5
4736637	3-43	5
4736638	3-43	5
4737345	6-5	33
	6-5	33
4737402	11-347	3
4737629	12-17	3
4737707	6-6	35
	11-319	
4738211	1-50	10
4738569	4-35	5
4738906	11-387	
4738982	16-29	24
4739381	16-29	27
4740257	1-103	15
	1-113	3
	1-117	3
4740519	11-127	1
4740520	11-129	1
4740521	11-127	1
4740522	11-129	1
4740523	11-131	1
4740524	11-133	1
4740525	11-131	1
4740526	11-133	1
4740527	11-127	1
4740528	11-129	1
4740529	11-127	1
4740530	11-129	1
4740531	11-131	1
4740532	11-133	1
4740533	11-131	1
4740534	11-133	1
4740543	11-135	1
4740544	11-135	1
4740545	11-139	1
4740546	11-139	1
4740549	11-137	1
4740550	11-137	1
4740551	11-141	1
4740552	11-141	1
4740555	11-135	1
4740556	11-135	1
4740557	11-139	1
4740558	11-139	1
4740561	11-137	1
4740562	11-137	1
4740563	11-141	1
4740564	11-141	1
4740624	1-30	7
4740625	1-30	
4740630	1-35	20
	1-37	15
4740631	1-35	
	1-37	4
4740632	1-35	
	1-37	3
4740894	3-41	1
	4-33	9
4740895	3-41	3
	4-33	7
4741219	1-50	2
4741220	1-50	3
4741221	1-50	6
4741222	1-50	4
4741223	1-50	8
4741224	1-50	1
4741225	1-50	5
4741226	1-50	7
4741228	1-50	3
4741230	1-50	4
4741231	1-50	8
4741232	1-50	1
4741233	1-50	5
4741234	1-50	7
4741325	3-41	5
	4-33	4
4741920	4-5	
	4-7	
	4-8	
	4-11	
	4-13	
	4-14	
	4-17	
	4-19	
	4-21	
	4-23	
	4-24	
	4-29	
	4-31	
	4-35	
4742600	11-106	18
4742706	11-127	23
	11-129	23
	11-131	23
	11-133	23
	11-135	23
	11-137	23
	11-139	23
	11-141	23
4742707	11-127	22
	11-129	22
	11-131	22
	11-133	22
	11-135	22
	11-137	22
	11-139	22
	11-141	22
4742735	1-96	2
4742750	11-112	2
4742751	11-112	2
4742752	11-112	2
4742753	11-112	2
4742853	11-127	12
	11-129	12
	11-131	12
	11-133	12
	11-135	12
	11-137	12
	11-139	12
	11-141	12
4742992	4-5	
	4-7	
	4-8	
	4-11	
	4-13	
	4-14	
	4-17	
	4-19	
	4-21	
	4-23	
	4-27	
	4-29	
	4-31	
	4-35	

See Service Manual for service procedures.
©2026 HYSTER COMPANY

NUMERICAL INDEX (continued)

PART NO.	PAGE	ITEM
4743667	11-347	1
4743668	11-347	3
4743802	22-65	2
4744934	11-145	10
4744936	11-145	10
4744953	11-121	1
4744954	11-121	2
4745112	1-45	17
4745113	1-47	14
4745184	1-45	1
	1-47	1
8861318	1-38	6
8861344	1-38	13
8861347	1-38	2
8861348	1-38	4
8861350	1-38	12
8861352	1-38	8
8861357	1-38	3
8861358	1-38	5
8861360	1-38	7
81000287	11-351	9
81003016	11-83	10
	11-85	1
	11-87	1
81003347	11-352	13
81003802	11-351	1
81004285	8-6	25
	8-13	
81004286	8-6	25
81004287	8-6	25
	8-13	
81004435	2-17	7
81005072	11-352	18
81005074	11-352	18
81005202	11-351	9
81005594	1-9	22
	1-13	30
	1-17	25
	1-21	17
	1-23	16
81005595	1-9	22
	1-13	30
	1-17	25
	1-21	17
	1-23	16
81005629	11-53	25
81005962	16-85	15
81005963	16-85	13
81008501	11-149	4
	11-151	2
81009972	19-32	16
81013874	11-351	9
81013876	11-352	20
81014317	14-3	38
	14-8	46
81016025	22-10	1
	22-12	1
81016243	11-17	24
	11-29	13
	11-31	28
	11-37	13
	11-43	14
	11-47	14
81016247	11-69	14
81016553	11-69	14
81017176	11-31	21
81017382	4-33	1
	11-391	
81017383	3-41	7
81017419	3-41	11
	11-391	4
81018589	3-41	6
	4-33	2
81018876	11-121	1
81018877	11-121	2
81018880	11-115	11
	11-121	3
81018881	11-115	11
	11-121	3
81020752	15-3	6
81022757	4-35	27
81024093	12-13	1
	12-15	1
81024336	15-35	2
81024486	8-7	5
81024487	8-7	4
81024488	8-7	5
81024489	8-7	4
81024491	8-7	8
81024982	8-7	6
81025187	11-59	5
	11-61	9
	11-73	4
	11-75	4
81025410	8-7	5
81025411	8-7	4
81025473	3-41	8
	11-391	1
81029079	15-43	1
81029080	15-44	
81029189	8-13	1
81029190	8-13	1
81029191	8-13	6
81032046	13-8	4
	13-9	3
81032047	13-8	3
	13-9	2
81035397	1-99	18
81035875	1-99	19
81040598	11-146	29
81048635	12-15	13
81049814	3-27	5
81051729	1-119	99
81051731	1-119	
81054819	12-15	8
81056401	15-31	8
81057967	3-43	5
81058297	17-35	2
81058298	17-35	18
81058852	11-31	9
81062031	17-35	1
81062037	17-35	17
81062045	17-35	1
81062101	17-35	17
81062148	17-35	1
81062150	17-35	17
81063015	22-68	3
	22-70	1
81063875	22-70	3
81063876	22-70	2
81063881	22-68	1
81063882	22-68	2
81063883	22-70	2
81063884	22-70	3
81063885	22-68	1
81063886	22-68	2
81063887	22-68	1
81063888	22-68	2
81063893	22-70	6
81063894	22-70	7
81063901	22-68	6
81063902	22-68	7
81063903	22-70	6
81063904	22-70	7
81063905	22-68	6
81063906	22-68	7
81063907	22-68	6
81063908	22-68	7
81065999	22-34	3
81071517	15-23	14
81071565	15-23	13

NUMERICAL INDEX (continued)

NOTES

©2026 HYSTER COMPANY

HYSTER